LBNL-39320
UC-406

ERNEST ORLANDO LAWRENCE BERKELEY NATIONAL LABORATORY

Voltage-Biased High-T_c Superconducting Infrared Bolometers with Strong Electrothermal Feedback

A.T. Lee, J.M. Gildemeister, S.-F. Lee,
and P.L. Richards
Materials Sciences Division

August 1996
Presented at the
1996 Applied Superconductivity Conference,
Pittsburgh, PA,
August 25–30, 1996,
and to be published in
the Proceedings

REFERENCE COPY
Does Not
Circulate
Bldg. 50 Library.
LBNL-39320
Copy 1

DISCLAIMER

This document was prepared as an account of work sponsored by the United States Government. While this document is believed to contain correct information, neither the United States Government nor any agency thereof, nor the Regents of the University of California, nor any of their employees, makes any warranty, express or implied, or assumes any legal responsibility for the accuracy, completeness, or usefulness of any information, apparatus, product, or process disclosed, or represents that its use would not infringe privately owned rights. Reference herein to any specific commercial product, process, or service by its trade name, trademark, manufacturer, or otherwise, does not necessarily constitute or imply its endorsement, recommendation, or favoring by the United States Government or any agency thereof, or the Regents of the University of California. The views and opinions of authors expressed herein do not necessarily state or reflect those of the United States Government or any agency thereof or the Regents of the University of California.

LBNL-39320
UC-406

Voltage-Biased High-T_c Superconducting Infrared Bolometers with Strong Electrothermal Feedback

Adrian T. Lee,** Jan M. Gildemeister,* Shih-Fu Lee,†
and Paul L. Richards†

*Department of Physics
University of California
Berkeley, California 94720

**Center for Particle Astrophysics
University of California
Berkeley, California 94720

†Materials Sciences Division
Ernest Orlando Lawrence Berkeley National Laboratory
University of California
Berkeley, California 94720

August 1996

This work was supported by the Director, Office of Energy Research, Office of Basic Energy Sciences, Materials Sciences Division, of the U.S. Department of Energy under Contract No. DE-AC03-76SF00098.

Presented at the 1996 Applied Superconductivity Conf., Pittsburgh, PA, August 25-30, 1996

LBNL-39320

Voltage-Biased High-T_c Superconducting Infrared Bolometers with Strong Electrothermal Feedback

Adrian T. Lee†, Jan M. Gildemeister, Shih-Fu Lee*, and Paul L. Richards*

Department of Physics, University of California, Berkeley, CA 94720
†*Center for Particle Astrophysics, University of California, Berkeley, CA 94720*
**Material Science Division, Lawrence Berkeley National Laboratory, University of California, Berkeley, CA 94720*

Abstract — In the current generation of high-T_c bolometers the thermal conductance is often chosen for a short time-constant rather than for optimal sensitivity. We describe a novel bolometer bias and readout scheme that promises to relax this constraint. Voltage bias of the superconductor results in strong negative electrothermal feedback that greatly reduces the time-constant of the bolometer. We estimate that a decrease of more than one order of magnitude in time-constant should be possible with existing high-T_c thermometers. We give theoretical estimates of the performance gain with voltage bias for several bolometers that have been reported in the literature. We find cases where the sensitivity can be greatly improved (by changing the thermal conductance) while holding the time constant fixed and others where the bolometer can be made much faster while maintaining the sensitivity.

I. INTRODUCTION

Infrared bolometers with high-T_c superconducting thermometers can be more than an order of magnitude more sensitive than other liquid-nitrogen-cooled (or room temperature) technologies at wavelengths longer than 10 μm.[1,2] Existing liquid-nitrogen-cooled photon detectors lose sensitivity at long wavelengths because of thermally-excited dark current. Applications of high-T_c bolometers include infrared spectroscopy[1] and space-based observations of bright sources such as planets[3]. In particular, arrays of high-T_c bolometers are very attractive for imaging at wavelengths longer than 10 μm.[4]

Manuscript received August 27, 1996
This work was supported in part by the Director, Office of Energy Research, Office of Basic Energy Sciences, Materials Sciences Division of the U.S. Department of Energy, under Contract No. DE-AC03-76SF00098 (PLR), by the National Science Foundation through the Center for Particle Astrophysics (cooperative agreement AST 91-20005) (ATL), and Rotary Dist. 346 (SFL).

Superconducting transition-edge bolometers have traditionally been operated with a constant-current bias, which results in positive electrothermal feedback (ETF).[5] The bias current must therefore be limited to avoid thermal instability. It has recently been pointed out[6] that a constant-voltage bias mode with strong negative ETF[6,7] gives several important operational advantages. The most important of these is a large reduction of the bolometer time-constant due to strong ETF. We estimate a decrease of more than one order of magnitude in time constant should be possible with existing high-T_c thermometers.

In the current generation of high-T_c bolometers the thermal conductance is often chosen for a short time-constant rather than for optimal sensitivity. The time-constant decrease due to negative ETF can be used to relax this constraint.

In this paper, we give theoretical estimates of the performance gain with voltage bias for several bolometers that have been reported in the literature. We find cases where the sensitivity can be greatly improved (by changing the thermal conductance) while holding the time constant fixed and others where the bolometer can be made much faster while maintaining the sensitivity.

Operationally, the change in sensor current from the voltage-biased superconducting bolometer (VSB) can be read out with a high-T_c superconducting quantum interference device (SQUID) ammeter or transistor-based transimpedance amplifier. The lead resistance must be kept much lower than the bolometer resistance to maintain the constant-voltage bias.

II. VSB THEORY

The VSB theory and operation discussed in this section and section III are applicable to both low- and high-T_c bolometers. The strength of electrothermal feedback for bolometers with resistive thermometers is controlled by the quantity $\mathcal{L}=P_b\alpha/GT$ which is analogous to the loop gain in

control circuits. Here P_b is the power dissipated in the bolometer by the bias and α=dlogR/dlogT is a dimensionless measure of the steepness of the superconducting transition which can be 10^2 to 10^3 for high quality films. The electrothermal feedback is negative with the VSB and $\mathcal{L}$ can be >>1. For a current biased superconductor, $\mathcal{L}$ is limited to values <1 to avoid thermal instability. The current responsivity, defined as the ratio of changes in sensor current to those in absorbed optical power of the bolometer, can be computed from energy conservation[8] to give

$$S_I = -\frac{1}{V_b}\frac{\mathcal{L}}{1 + i\omega\tau_0 + \mathcal{L}}. \qquad (1)$$

Here, ω is the modulation frequency of the infrared signal, τ_0=C/G is the intrinsic thermal time constant without feedback and C is the heat capacity of the bolometer. Two features of the VSB are immediately apparent from this expression. In the limit $\mathcal{L}$>>1, S_I=-1/V_b for ω<<1/τ, where τ is the VSB response time. Consequently, this bolometer has excellent linearity and is easily calibrated. Also, the Lorentzian roll-off of the responsivity occurs when $\omega\tau_0 \sim 1+\mathcal{L}$ which can be >>1. Thus the negative feedback increases the speed of response with

$$\tau = \tau_0 \frac{1}{1 + \mathcal{L}}. \qquad (2)$$

It should be mentioned that the $\mathcal{L}$ term in the denominator of Eqn. 1 arises from the bias heating term in the energy conservation equation[8], so can be identified with the electrothermal feedback.

The noise equivalent power (NEP) for a VSB with ω<<1/τ can be written[5]

$$NEP^2 = NEP^2_{photon} + \gamma 4kT^2G + \frac{1}{S_I^2}\left(i_n^2 + \frac{1}{(1+\mathcal{L})^2}\left(\frac{4kT}{R} + a(\omega)\left(\frac{V_b}{R}\right)^2\right)\right), \qquad (3)$$

where the terms describe statistical photon noise, thermal fluctuation noise, readout noise, Johnson noise, and excess low-frequency (often 1/f) sensor noise respectively. Here, i_n is the readout current noise, R is the resistance of the sensor, and γ describes the reduction of thermal fluctuation noise due to the temperature difference between the sensor and the heat sink. The 1/(1+$\mathcal{L}$) term in Eqn. 2 describes the suppression of Johnson and low-frequency noise current by ETF first noted by Mather.[5] The low-frequency noise current is assumed to be proportional to V_b. This dependence is characteristic of both low-T_c[9,10] and high-T_c[4] films. Note that a(ω) has units of inverse frequency and can depend on film geometry, film quality, and α.

The NEP can be rewritten as

$$NEP^2 = NEP^2_{photon} + \gamma 4kT^2G + i_n^2 V_b^2 + \frac{4kT^3G^2}{P_b\alpha^2} + a(\omega)\frac{G^2T^2}{\alpha^2}. \qquad (4)$$

The Johnson noise contribution to the NEP depends inversely on P_b and is therefore much lower for voltage bias, where P_b can be large, than for current bias. The dependence of the low-frequency noise on bias power depends on the model, but is independent of bias, for example, in the case of resistance fluctuations which are important for both low- and high-T_c sensors.[4,9,10] The NEP for high-T_c bolometers is often dominated by either the thermal fluctuation or the low-frequency noise term. In either case, the minimum NEP is obtained for a small value of G, giving a significant temperature rise. The optimum temperature rise depends on the materials that make up the thermal conductance, but can be as large as the bath temperature.[8,11] Such a large temperature rise is not possible with YBCO thermometers cooled with liquid nitrogen. For this case, the best sensitivity is obtained if G is chosen to give a temperature rise close to the maximum of ~10K.

III. VSB OPERATION

A representative bias and SQUID readout circuit is shown in fig. 1.[6,8] The input coil of the dc-SQUID is in series with the sensor and the voltage bias is in parallel with the SQUID-sensor combination. Constant voltage bias is obtained by current-biasing a shunt resistor, whose resistance is <<R.

The criterion that the NEP from readout noise be less than the NEP from thermal fluctuations sets a requirement on the resistance of the bolometer. For a 25$\mu\phi_0/\sqrt{Hz}$ SQUID with a 0.2μA/ϕ_0 coupling

coil[12] and T=90K, R must be <1kΩ. For large scale arrays, it may be more practical to use a transistor-based transimpedance amplifier. Given an input transistor with 3 nV/√Hz noise and T=90K, R must be >100Ω for thermal fluctuation noise to dominate readout noise.

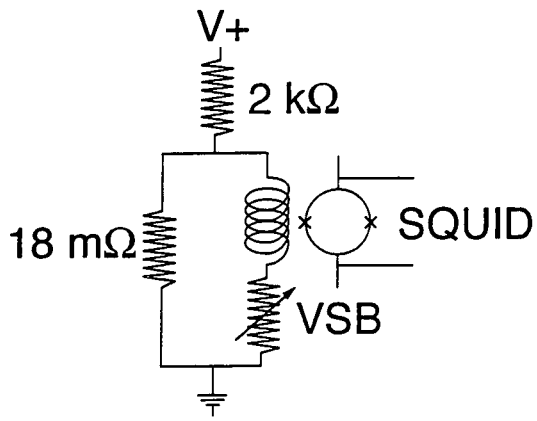

Fig. 1. Bolometer bias and SQUID readout circuit. Constant voltage bias is provided by a current biased resistor in parallel with series combination of bolometer and SQUID input coil.

The G of the VSB must be chosen to match the largest estimated value of optical loading P.[8] For a given G, the bias power is at its maximum value $P_{b\text{-}max}$ when the optical load is negligible. As P is increased, P_b decreases. For $\mathcal{L}>>1$, $P + P_b$ is held constant and the responsivity $S_I=-1/V_b$ is constant. The sensor saturates when P approaches $P_{b\text{-}max}$. As with many bolometers, dynamic range can be traded for sensitivity. With $P_{b\text{-}max}$ = 2 x estimated P, P_b=P when P is the estimated value, and the VSB saturates when P is twice the estimated value.

The leads to the bolometer need not be superconducting, but the lead resistance must be kept much lower than the bolometer resistance to maintain the constant-voltage bias.

IV. HIGH-T_c BOLOMETER COMPARISON

In order to illustrate the importance of voltage bias for practical devices, we compare in Table I the time-constant of published (current biased) bolometers to the estimated time-constant of the same bolometers if constant-voltage bias and current readout were implemented.

The bolometers listed are from Verghese *et al.* [1], Johnson *et al.* [13], and Berkowitz *et al.*[14]. The $\mathcal{L}$ values were calculated using the published transitions, assuming operation at ~10% of the normal resistance. The estimated time-constant for the VSB was then calculated using Eqn. 2. The speedup achieved in all three cases is more than one order of magnitude. The calculation of the time-constants was done under the assumption that the internal time-constant of the bolometer is short enough to not degrade the performance of the VSB. It should also be noted that the resistance of the bolometer of Johnson *et al.* would have to be reduced to satisfy the criterion for a low NEP due to readout noise given in section III. The information in the first eight rows were obtained from the references.

TABLE I
COMPARISON OF PUBLISHED HIGH-Tc BOLOMETERS

	UCB/ Conductus (Verghese *et al.*, 1993)	Honeywell/ JPL (Johnson *et al.*, 1994)	Conductus/ NIST (Berkowitz *et al.*, 1996)
λ (μm)	20<λ<100	3<λ<22	12<λ<36
A (μmxμm)	10^3x10^3	140x105	50x50
P (W)	-	3.4x10^{-7}	-
G (W/K)	2.7x10^{-4}	8.5x10^{-8}	8x10^{-7}
C (J/K)	1.5x10^{-5}	6.7x10^{-9}	1x10^{-9}
τ (Ibias)(ms)	55	105	1.2
NEPtherm (W/√Hz)	1.1x10^{-11}	2x10^{-13}	6x10^{-13}
NEP (W/√Hz)	2.4x10^{-11} @10Hz	1.5x10^{-12} @2Hz	1.2x10^{-12} @32Hz
$\mathcal{L}$ (VSB)	29	12	27
τ(VSB)(ms)	2	6	0.045

It is of interest to consider how these bolometers should be re-optimized to take full advantage of the voltage bias for specific applications. In this illustration, we assume that the value of G can be changed as required. In practice, such changes may not be straightforward.

The Verghese *et al.* device is a composite bolometer designed for use with a far infrared step-and-integrate laboratory Fourier spectrometer. For this application, G could be decreased by an order of magnitude with voltage bias while holding the response time roughly constant. Since the contributions to the NEP due to thermal fluctuations and low-frequency noise scale as √G and G, respectively (see Eqn. 4), the NEP should be decreased by more than a factor of ~3.

Alternatively, the frequency response could be extended to 1kHz to allow this bolometer to be used with a laboratory rapid-scan Fourier spectrometer for measurements throughout the infrared. The

required $G=3x10^{-3}$ would be well matched to the combination of a 900K source and a throughput of 10^{-2} cm^2-sr. The NEP is then estimated to be $\sim 4x10^{-11}$.

The bolometer of Johnson *et al.* is a monolithic device designed for array imaging. The G of the Johnson *et al.* device is close to optimal for thermal imaging, but the time-constant is long for an imaging camera. Voltage bias would give a very useful camera frame rate of ~30Hz, with the same value of G. The contribution to the NEP from the low-frequency noise would also be reduced since the device would be operated at a higher frequency. If the NEP^2 scales as 1/f, then the NEP would decrease by a factor of four.

The bolometer of Berkowitz *et al.* is also a monolithic device designed for array imaging. The G of the Berkowitz *et al.* device is larger than optimal for thermal imaging, but the device speed is adequate for a 30 Hz camera frame rate. With voltage bias, it would be desirable to reduce G up to an order of magnitude (depending on the optical loading) giving a factor ~3 decrease in NEP, while retaining the bandwidth of the device.

V. CONCLUSION

We have described a potential major improvement in high-T_c bolometer technology. The time-constant decrease of the VSB results in a powerful combination of speed and sensitivity. Many of the applications of high-T_c bolometers have a strict time-constant requirement, and given that constraint the use of voltage bias results in a substantial increase in sensitivity for the current generation of devices.

ACKNOWLEDGMENT

The authors thank Stuart Berkowitz, Blas Cabrera, John Davis, Kent Irwin, Dan McCammon, Sae-Woo Nam, and Scott Sachtjen for useful discussions.

REFERENCES

[1] S. Verghese, P. L. Richards, S. A. Sachtjen and K. Char, "Sensitive bolometers using high-T_c superconducting thermometers for wavelengths 20-300 μm,"*J. Appl. Phys.* **74** 6, pp. 4251-4253, September 1993.

[2] P. L. Richards, "Bolometers for infrared and millimeter waves,"*J. Appl. Phys.* **76** 1, pp. 1-24, July 1994.

[3] J. C. Brasunas, S. H. Moseley, B. Lakew, R. H. Ono, D. G. McDonald, J. A. Beall and J. E. Sauvageau, Proceedings of SPIE, **1477**, p166, 1991.

[4] S. Verghese, P. L. Richards, K. Char, D. K. Fork and T. H. Geballe, "Feasibility of infrared imaging arrays using high-T_c superconducting bolometers,"*J. Appl. Phys.* **71** 6, pp. 2491-2498, March 1992.

[5] J. C. Mather, "Bolometer noise: nonequilibrium theory,"*Appl. Opt.* **21** 6, pp. 1125-1129, March 1982.

[6] K. D. Irwin, "An application of electrothermal feedback for high resolution particle detection,"*Appl. Phys. Lett.* **66** 15, pp. 1998-2000, April 1995.

[7] K. D. Irwin, S. W. Nam, B. Cabrera, B. Chugg and B. A. Young, "A quasi-trap-assisted transition-edge sensor for phonon-mediated particle detection,"*Rev. Sci. Instrum.* **66** 10, pp. 1-5, October 1995.

[8] A. T. Lee, P. L. Richards, S.-W. Nam, B. Cabrera and K. D. Irwin, "A superconducting bolometer with strong electrothermal feedback,"*Appl. Phys. Lett.* , in press 1996.

[9] J. Clarke and T. Y. Hsiang, "Low-frequency noise in tin and lead films at the superconducting transition,"*Phys. Rev. B* **13** 11, pp. 4790-4800, June 1976.

[10] J. Clarke, G. I. Hoffer, P. L. Richards and N.-H. Yeh, "Superconductive bolometers for submillimeter wavelengths,"*J. Appl. Phys.* **48** 12, pp. 4865-4879, December 1977.

[11] J. C. Mather, "Bolometers: ultimate sensitivity, optimization, and amplifier coupling,"*Appl. Optics* **23** 4, pp. 584-588, 1984.

[12] commercially available from Conductus inc., Sunnyvale CA.

[13] B. R. Johnson, M. C. Foote, H. A. Marsh and B. D. Hunt, Proceedings of SPIE, **2267**, pp. 24-30, 1994.

[14] S. J. Berkowitz, A. S. Hirahara, K. Char and E. N. Grossman, "Low noise high-temperature superconducting bolometers for infrared imaging,"*Appl. Phys. Lett.* , in press 96.

Ernest Orlando Lawrence Berkeley National Laboratory
One Cyclotron Road | Berkeley, California 94720

Prepared for the U.S. Department of Energy under Contract No. DE-AC03-76SF00098