LBNL-39824
UC-410

ERNEST ORLANDO LAWRENCE
BERKELEY NATIONAL LABORATORY

The Advanced Light Source Elliptically Polarizing Undulator

S. Marks, C. Cortopassi, J. DeVries, E. Hoyer,
R. Leinbach, Y. Minamihara, H. Padmore,
P. Pipersky, D. Plate, R. Schlueter, and A. Young
Accelerator and Fusion Research Division

May 1997
Presented at the
Particle Accelerator Conference,
Vancouver, B.C., Canada,
May 12–16, 1997,
and to be published in
the Proceedings

LOAN COPY
Circulates
For 4 weeks
Bldg. 50 Library
Lawrence Berkeley National Laboratory
LBNL-39824
Copy 2

LBNL-39824
UC-410

The Advanced Light Source Elliptically Polarizing Undulator

S. Marks, C. Cortopassi, J. DeVries, E. Hoyer, R. Leinbach, Y. Minamihara, H. Padmore, P. Pipersky, D. Plate, R. Schlueter, and A. Young

Accelerator and Fusion Research Division
Ernest Orlando Lawrence Berkeley National Laboratory
University of California
Berkeley, California 94720

May 1997

This work was supported by the Director, Office of Energy Research, Office of Basic Energy Sciences, Materials Sciences Division, of the U.S. Department of Energy under Contract No. DE-AC03-76SF00098.

THE ADVANCED LIGHT SOURCE ELLIPTICALLY POLARIZING UNDULATOR

S. Marks, C. Cortopassi, J. DeVries, E. Hoyer, R. Leinbach, Y. Minamihara, H. Padmore, P. Pipersky, D. Plate, R. Schlueter, A. Young, Lawrence Berkeley Laboratory, Berkeley, California

Abstract

An elliptically polarizing undulator (EPU) for the Advanced Light Source (ALS) has been designed and is curently under construction. The magnetic design is a moveable quadrant pure permanent magnet structure featuring adjustable magnets to correct phase errors and on-axis field integrals. The device is designed with a 5.0 cm period and will produce variably polarized light of any ellipticity, including pure circular and linear. The spectral range at 1.9 GeV for typical elliptical polarization with a degree of circular polarization greater than 0.8 will be from 100 eV to 1500 eV, using the first, third, and fifth harmonics. The device will be switchable between left and right circular modes at a frequency of up to 0.1 Hz. The 1.95 m long overall length will allow two such devices in a single ALS straight sector.

1 INTRODUCTION

A facility dedicated for magnetic microscopy and spectroscopy at the ALS [1] will eventually include a complement of three EPU's of the type first proposed by Sasaki [2]. The first of these (EPU5.0) is a 1.95 m long device, with 37.5 periods of 5.0 cm [3]. The EPU5.0 is designed to produce very bright photon beams with variable polarization in the spectral range of 100 eV to 1500 eV. The EPU facility will eventually include a second EPU5.0 and an EPU8.0 to access lower photon energies. The device length is chosen to allow two insertion devices to be placed in tandem in a single straight. The third device is accommodated by use of a transverse stage on which one of the EPU 5.0's will be mounted along with the longer period device. This arrangement will allow users to switch between the sources. A three magnet chicane system will separate the photon beams from the two in-line insertion device stations by 2.53 mrad.

2 PRINCILE OF OPERATION

The magnetic structure consists of four identical quadrants as shown schematically in Figure 1. Q1 and Q3 are fixed; Q2 and Q4 are allowed to translate parallel to the magnetic axis. The relative translation, called the quadrant phase, χ, of the magnetic quadrants changes the strength of the vertical and horizontal magnetic field components, B_x and B_y. This changes the ellipticity of an electron orbit passing through the device,. and thus the polarization of the emitted radiation. When $\chi = 0$, the magnetic structure is equivalent to a standard linear undulator, with B_y the only on axis component, and the radiation is linearly polarized in the horizontal plane. When $\chi = \lambda/2$, where λ is the undulator period, only B_x is produced on axis, and radiation is linearly polarized in the vertical plane. When χ has any other value both B_x and B_y are produced on axis, and the radiation is elliptically polarized. When $B_x = B_y$, radiation is circularly polarized.

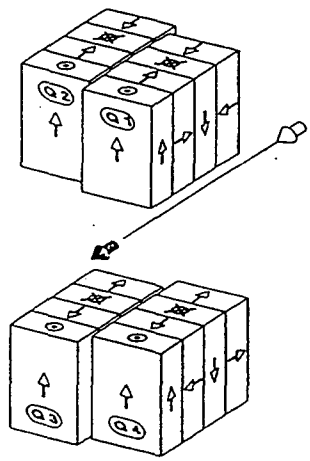

Figure 1: Four quadrant schematic of EPU.

3 SPECTRAL PROPERTIES

The EPU 5.0 will operate in various polarization modes: horizontal and vertical linear polarization, circular and elliptical polarization. The design energy ranges for these modes are summarized in Table 1 below. To achieve acceptable performance at 1500 eV for elliptical, horizontal, and vertical polarization modes, the EPU has to produce a high degree of circular polarization and high brightness in the 5th spectral harmonic.

Table 1

Polarization Mode	Energy Range
Circular	130 - 600 eV
Elliptical	100 - 1500 eV
Horizontal	90 - 1500 eV
Vertical	170 - 1500 eV

Figure 2 shows the merit function brightness, M_b, for elliptical and circular polarization modes as a function of photon energy. Merit function brightness is defined as $M_b = BP_c^2$, where B is the spectral brightness, and P_c is the degree of circular polarization.

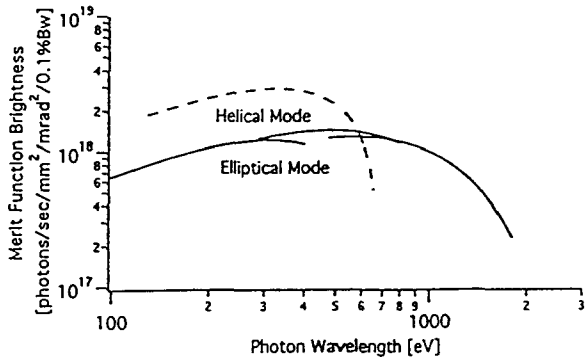

Figure 2: Merit Function Brightness for EPU.

4 MAGNETIC STRUCTURE

The four magnetic quadrants are attached to separate backing beams which allow Q2 and Q4 to translate axially relative to Q1 and Q3, which are fixed. Each quadrant has a magnetic structure length of 1.95 m, including 37.5 full magnetic periods, the ends for achieving a gap-independent steering and displacement free entrance and exit, and magnetic trim sections for correction of integrated multipoles.

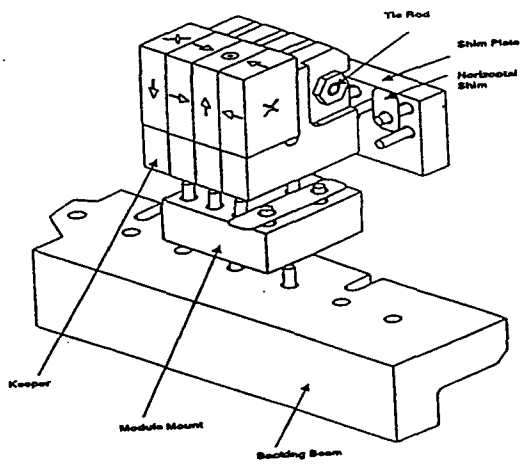

Figure 3: EPU periodic module structure.

Within each quadrant, the basic assembly unit is a four block, one period, module. Figure 3 shows an exploded view of a four block and keeper module and its interface to the backing beam. Each block within the module is bonded to an aluminum keeper. The set of four blocks and keepers are held together with a tie rod. A keeper's vertical position is held with two bolts. The horizontal position is held with a shim plate that is bolted to each keeper and to the backing beam. Each keeper's vertical and horizontal position can be adjusted with the use of shims between the keeper and module and the keeper and the shim plate, respectively. The design allows for a total adjustment range of ±0.25 mm. One of the four keepers in each module is keyed with a pin which, in combination with a slot in the backing beam, provides longitudinal registration of the module. The tie rod and shim plate holds the four keepers within a module together to allow individual modules to be removed from the magnetic structure for adjustment or for swapping with other modules. Field errors may be first minimized by vertical and horizontal shimming. Optical phase errors may be further reduced by module swapping.

5 SUPPORT STRUCTURE AND DRIVE SYSTEM

Figure 4, an elevation and side view of the EPU structure, illustrates the support structure and drive systems. The support structure is an "I" frame design. Two vertical columns are mounted to a common base with two horizontal members connecting them. The vertical columns support two roller screw assemblies, each assembly includes one right hand and one left hand roller screw coupled together at the midplane. Each roller screw has a 2 mm pitch thereby providing 4 mm of total gap movement per roller screw revolution. The roller screws are chosen to also act as a guide shaft with linear/rotary bearings mounted to the upper and lower backing beams via a vertical gap drive support. The vertical gap drive support is fastened to the stationary upper and lower backing beams which are at opposite quadrants (Q2 and Q4) of the magnetic structure. The stationary backing beam also supports the moving backing beams via a set of crossed roller slides. This allows the backing beams in Q1 and Q3 to move relative to the backing beams in Q2 and Q4.

The vertical gap is moved via a chain drive system connecting a 25:1 wormgear reduction box and servo-motor to the two roller screw assemblies. A glass engraved linear encoder is mounted to the magnetic structure to provide direct feedback to the vertical gap drive system. The longitudinal drive system is a similar system using a smaller roller screw with a 2 mm pitch directly coupled via a 3:1 planetary gear box and servo-motor. There will be two longitudinal drive systems: one for the upper magnetic structure and one for the lower magnetic structure. The motor/gear box and roller screw will be mounted to the stationary backing beams in Q2 and Q4. The roller screw nut will be mounted to the movable backing beams in Q1 and Q3. A linear encoder will be mounted to each backing beam to provide positive feedback as to the offset of the different quadrants.

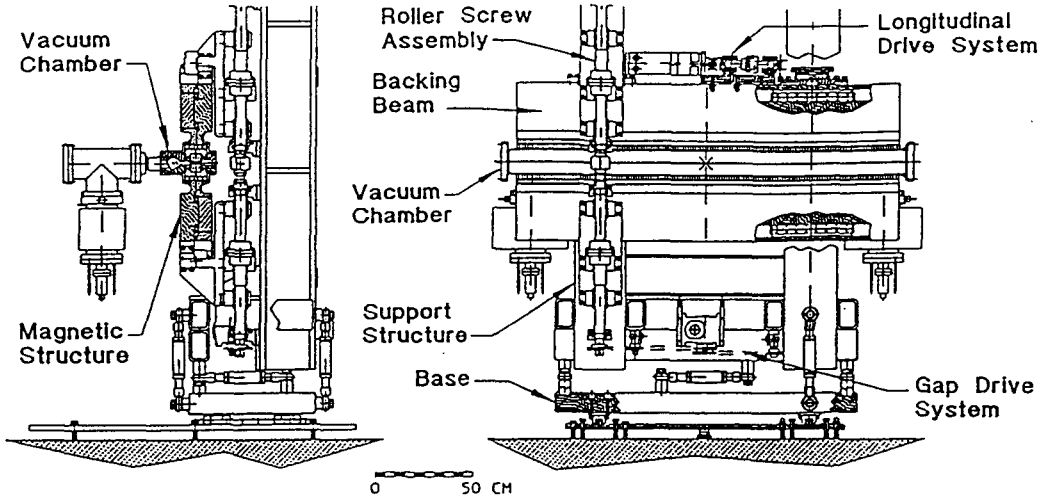

Figure 4: EPU elevation and side view.

6 VACUUM SYSTEM

The vacuum systemconsists of two 2.1 m long EPU chambers, machined in two halves out of 5083-H321 aluminum and welded together, and three smaller transition chambers to accomodate the chicane system. The EPU chambers are machined to achieve a nominal 9.4 mm vertical aperture and a 1.3 mm wall thickness. This leaves 2.5 mm for fabrication and alignment tolerances and magnetic adjustments to achieve a 14.5 mm minimum magnetic gap. A water cooled photon absorber is located in the upstream chamber to absorb radiation from the upstream bend magnet and to protect the downstream chamber. A 60 l/s ion pump and 600 l/s titanium sublimation pump combination is located at the ends of each chamber. Calculations for the vacuum configuration predict an average pressure of less than 3×10^{-9} Torr after 40 A-hrs of operation in the storage ring.

7 CHICANE SYSTEM

A three magnet chicane system is used to steer the electron beam through two EPU's with orbit correction and to provide an angular seperation in the two photon beams. The first magnet steers the electron beam from the straight sector centerline inward 1.25 mrad, the second magnet steers the electron beam outward 2.53 mrad and the third magnet steers the electron beam 1.28 mrad back onto the centerline of the straight sector. Inward beam displacement is 3.05 mm at the center magnet. Vertical steering capability of each magnet is +/-0.20 mrad.

The magnets are conventional with water cooled coils designed to carry 80 A. Peak horizontal and vertical field integrals for the central magnet are 0.0158 T-m and 0.0079 T-m respectively. The designs are identical for the three magnets except that the central magnet has four horizontal steering coils wrapped around its poles whereas the end magnets have just two coils each. The vertical coils cover the pole faces, are inside the horizontal coils and wrap around the top and bottom of the yoke. Coils are wound from 1/8" OD × 1/16" ID copper tubing; they are insulated with fiberglass and impregnated with epoxy. Core construction is with C-shaped laminations of 1.6 mm thickness that are bonded together with epoxy. To control the magnet fringe fields, field clamps are provided on both the entrance and exit ends of the magnet. Overall magnet length is 0.15 m. Magnet support and adjustment is proviced by 6 strut assemblies mounted onto tubular pedestals. Each magnet is powered with two bi-polar power supplies; current regulation is 1 part in 10^3.

11 ACKNOWLEDGEMENTS

This work was supported by the Director, Office of Energy Research, Office of Basic Energy Sciences Division, U. S. Department of Energy, under Contract No. DE-A03-76SF00098.

REFERENCES

[1] A. Young, E.H. Hoyer, S. Marks, V. Martynov, H.A. Padmore, D. Plate, R. Schlueter, "Elliptically polarizing undulator beamlines at the Advanced Light Source", Rev. Sci. Instrum., 67 (1996) 3372.
[2] S. Sasaki: 'Analyses for a planar variably-polarizing undulator',Nucl. Instr. And Meth. A 347 (1994) 83.
[3] 'EPU5.0 Elliptical Polarization Undulator Conceptual Design Report', to be published.