LBNL-39902
Preprint

ERNEST ORLANDO LAWRENCE
BERKELEY NATIONAL LABORATORY

Upper Bound on R_b in Two Higgs Doublet Model from Lepton Universality

Junji Hisano, Shingo Kiyoura,
and Hitoshi Murayama

Physics Division

February 1997

Submitted to
Physics Letters B

REFERENCE COPY
Does Not
Circulate

Bldg. 50 Library - Ref.
Lawrence Berkeley National Laboratory

LBNL-39902
Copy 1

DISCLAIMER

This document was prepared as an account of work sponsored by the United States Government. While this document is believed to contain correct information, neither the United States Government nor any agency thereof, nor the Regents of the University of California, nor any of their employees, makes any warranty, express or implied, or assumes any legal responsibility for the accuracy, completeness, or usefulness of any information, apparatus, product, or process disclosed, or represents that its use would not infringe privately owned rights. Reference herein to any specific commercial product, process, or service by its trade name, trademark, manufacturer, or otherwise, does not necessarily constitute or imply its endorsement, recommendation, or favoring by the United States Government or any agency thereof, or the Regents of the University of California. The views and opinions of authors expressed herein do not necessarily state or reflect those of the United States Government or any agency thereof or the Regents of the University of California.

LBNL-39902

Upper Bound on R_b in Two Higgs Doublet Model from Lepton Universality

Junji Hisano,[1] Shingo Kiyoura,[2,3] and Hitoshi Murayama[4,5]

[1]School of Physics and Astronomy
University of Minnesota, 116 Church Street S.E.
Minneapolis, Minnesota 55455

[2]Department of Physics
Tokyo Institute of Technology, Oh-okayama 2-12-1
Megro-ku, Tokyo, 152, Japan

[3]National Laboratory of High Energy Physics
1-1 Oho, Tsukuba-shi, Ibaraki-ken, 305, Japan

[4]Department of Physics, University of California, Berkeley
and
[5]Theoretical Physics Group, Physics Division
Ernest Orlando Lawrence Berkeley National Laboratory
University of California, Berkeley, California 94720

February 1997

This work was supported in part by the Director, Office of Science, Office of High Energy and Nuclear Physics, Division of High Energy Physics, of the U.S. Department of Energy under Contract Nos. DE-AC03-76SF00098 and DE-FG02-94ER40823, and by National Science Foundation Grant PHY-95-14797.

February 2, 1997

MN-HEP-1527, TPI-01/97
KEK-TH-509, TIT/HEP-359
LBNL-39902, UCB-PTH-97/05
hep-ph/9702202

Upper Bound on R_b in Two Higgs Doublet Model from Lepton Universality*

Junji Hisano,[1] Shingo Kiyoura,[2,3] and Hitoshi Murayama[4,5†]

[1] *School of Physics and Astronomy, University of Minnesota*
116 Church Street S.E.
Minneapolis, MN55455, USA
[2] *Department of Physics, Tokyo Institute of Technology*
Oh-okayama 2-12-1, Megro-ku, Tokyo, 152, Japan
[3] *National Laboratory of High Energy Physics*
1-1 Oho, Tsukuba-shi, Ibaraki-ken, 305, Japan
[4] *Department of Physics, University of California*
Berkeley, California 94720, USA
[5] *Theoretical Physics Group*
Ernest Orlando Lawrence Berkeley National Laboratory
University of California, Berkeley, California 94720, USA

Abstract

It has been known that R_b can be enhanced in the two Higgs doublet model if $\tan\beta$ is large. We point out that a similar enhancement in $\Gamma(Z \to \tau^+\tau^-)$ is large enough to place a constraint on such a possibility. We obtain a 95% CL upper bound $\Delta R_b/R_b < 0.73\%$ in this model for the $\overline{\rm MS}$ mass $m_b(m_Z) = 3.0$ GeV. The 1996 world average is $\Delta R_b/R_b = 0.97\% \pm 0.51\%$. We used the $m_b(m_Z)$ to determine the bottom Yukawa coupling instead of $m_b(m_b)$ unlike in previous analyses, and also an improved experimental test of the lepton universality in Z decay, which made our results qualitatively different.

* The work of J.H. was supported by the DOE under contract DE-FG02-94ER40823. The work of H.M. was supported in part by the DOE under contract DE-AC03-76SF00098, and in part by the NSF under grant PHY-95-14797.

† Alfred P. Sloan Fellow.

The Standard Model (SM) has been tested at an impressive accuracy by recent collider experiments such as LEP, SLC, and Tevatron. Currently no serious conflict between the data and the SM is reported. However, the $Z \to b\bar{b}$ branching fraction has been higher than the SM value at a few standard deviation level. The value of $R_b \equiv \Gamma(Z \to b\bar{b})/\Gamma(Z \to \text{hadrons})$ reported in summer 1995 [1] was actually more than three standard deviations higher from the SM prediction and stimulated many theoretical and experimental efforts. The most recent measurements from SLC (0.2149 ± 0.0032) [2], ALEPH (0.2158 ± 0.0009) [3], DELPHI ($0.2176 \pm 0.0028 \pm 0.0027$) [4], and OPAL ($0.2175 \pm 0.0014 \pm 0.0017$) [5], however, are consistent with the SM ($R_b^{SM} = 0.2157$ for $m_t = 175$ GeV), and as a result, the 1996 world average value combining all the old and new data has come closer to the SM prediction ($R_b = 0.2178 \pm 0.0011$) [6]. Since older and newer measurements have different systematics, it is not clear at this stage whether it is appropriate to discard older measurements from the world average. In fact, DELPHI suggested to combine their older and newer measurements, while ALEPH did not. The central value may further evolve as newer methods are developed and the experimental inputs are updated. In view of this situation, it is premature to judge what the final outcome would be. Therefore, it is useful to investigate the consequence of various models on R_b in the light of other experimental constraints.

It has been argued that the 1996 R_b value is actually more favored by various new physics scenarios than the 1995 one [7, 8, 9]. The 1995 average was hard to be explained by one-loop corrections to the $Zb\bar{b}$ vertex due to new particles. The 1996 average, on the other hand, is within the variation of R_b values predicted in the many new physics scenarios. This arises a renewed interest to check the consistency of various scenarios of high R_b with other existing experimental constraints.

Currently there are two popular models which may lead to R_b values higher than that in the SM. One is the Minimal Supersymmetric Standard Model (MSSM) in the small $\tan\beta$ region, where the loop of a scalar top (mostly right-handed one) and a chargino (mostly higgsino-like one) can enhance R_b which attracted many discussions [10]. The other is the loop of pseudo-scalar and scalar Higgs bosons in two Higgs doublet model (2HDM) which can also enhance R_b if $\tan\beta$ is large. The first scenario is now strongly constrained by recent limits on the chargino mass from LEP-II and the scalar top mass from D0. Still, one can accommodate a correction to R_b as large

as $\Delta R_b < 0.0017$ [11]. It was argued that the latter scenario is in a conflict with the lack of an enhancement in the four-b final states from Z decay [12] (see also [13]). The current experimental limit on four-b or $\tau^+\tau^- q\bar{q}$ final state [14] is, however, not as stringent as estimated in [12], and there still remains a possibility that this scenario may enhance the R_b at a desirable level. It is the purpose of this letter to investigate whether this scenario is consistent with other existing constraints.

The 2HDM has several motivations. First of all, it is the simplest extension of the minimal standard model which has to be confronted by experiments. Second, the electroweak baryogenesis requires an extension of the minimal standard model to incorporate a CP-violation in the Higgs sector. The 2HDM can naturally have CP-violating phases in its potential, and it is argued that it can create the value of cosmic baryon asymmetry as required by nucleosynthesis (for a review, see [15]). Third, the 2HDM may be a part of the MSSM. A general 2HDM has a potential problem of flavor-changing neutral currents, which can be naturally avoided by either of the following two ways. The Type-I 2HDM lets only one of the Higgs doublets couple to quarks and leptons and hence the coupling matrix of the Higgs bosons can be simultaneously diagonalized as the mass matrix of quarks. There is no flavor-changing vertex of the Higgs bosons. In this case, however, a large $\tan\beta$ does not enhance the Higgs coupling to the b-quark, and hence there is no interesting large contribution to R_b. On the other hand, the Type-II 2HDM lets one of the Higgs bosons couple to the up-quarks while the other to the down-quarks and a large $\tan\beta$ can enhance the coupling to the b-quark. In principle, either one of them can couple to the leptons. It is probably natural, however, to assume that the one which couples to the down-quarks also couples to the leptons because they share the same weak isospin $I_3 = -1/2$. It is indeed the case, for instance, in the MSSM. Then it is a natural question to ask whether a large $\tan\beta$ affects the phenomenology of the lepton sector.

We find that there is a strong correlation between $\Gamma(Z \to \tau^+\tau^-)/\Gamma(Z \to e^+e^-)$ and R_b in the Type-II 2HDM. From the observed lepton universality in Z decay, we find that R_b cannot deviate from the SM prediction by more than 0.73% at 95% confidence level almost independently from $\tan\beta$. This upper bound is in a conflict with the current central value of R_b.

The consequence of the 2HDM on the $Zb\bar{b}$ and $Z\tau^+\tau^-$ vertices was studied already some time ago [16]. It was concluded that the correction to $Z\tau^+\tau^-$ vertex was too small to be observed compared to its size to $Zb\bar{b}$ vertex. We

point out that two important changes should be made to this conclusion, however. The first is the improved accuracy in the experimental test of the lepton universality in Z decay, and the second is the running effect of the b-quark Yukawa coupling between m_b and m_Z which was not taken into account. A combination of a high accuracy in Y_τ (defined below) and the running effect of m_b can make the $Z\tau^+\tau^-$ vertex much more sensitive than previously thought.

The lepton universality in Z decay is now tested at an extremely high accuracy. For later discussion, we parameterize the possible violation of the lepton universality by the following double ratio,

$$Y_\tau = \frac{\Gamma(Z \to \tau^+\tau^-)/\Gamma(Z \to \tau^+\tau^-)_{\rm SM}}{\Gamma(Z \to l^+l^-)/\Gamma(Z \to l^+l^-)_{\rm SM}}. \tag{1}$$

Here, l refers to either e or μ assuming the universality among them, and the subscript SM to the standard model values. The advantage of using Y_τ is that many uncertainties cancel in the double ratio. Experimentally, the uncertainties in the luminosity measurement and overall width measurement nearly cancel between τ and l. Theoretically, the top quark and Higgs boson masses enter the predictions of partial widths through oblique corrections, but they cancel in the ratio. The ratio of the SM values $\Gamma(Z \to \tau^+\tau^-)_{\rm SM}/\Gamma(Z \to l^+l^-)_{\rm SM} = 0.9977$ is determined mostly by the kinematic factor $\beta_\tau^3 = (1 - 4m_\tau^2/m_Z^2)^{3/2}$ to a very good approximation because of the axial-coupling dominance in lepton couplings to the Z boson. Therefore, there is little theoretical ambiguity in the predicted ratio in the SM. We hence find that Y_τ is the most useful quantity for our purpose.

We derived the experimental value of Y_τ from the Z line shape and lepton forward-backward asymmetries reported by the LEP Electroweak Working Group [6]. They quote measured values of m_Z, Γ_Z, $\sigma_{\rm h}^0$, R_e, R_μ, R_τ, $A_{\rm FB}^{0,e}$, $A_{\rm FB}^{0,\mu}$, $A_{\rm FB}^{0,\tau}$ and their errors and correlation including new data from the 1995 energy scan. Here, $R_l \doteq \Gamma(Z \to \text{hadrons})/\Gamma(Z \to l^+l^-)$. Assuming the lepton universality for the first two generations, $R_l \equiv R_e = R_\mu$, $A_{\rm FB}^{0,l} \equiv A_{\rm FB}^{0,e} = A_{\rm FB}^{0,\mu}$, and using χ^2 fit to the seven remaining parameters, we determine the ratio

$$\frac{R_l}{R_\tau} = \frac{\Gamma(Z \to \tau^+\tau^-)}{\Gamma(Z \to l^+l^-)} = 0.99850 \pm 0.0030. \tag{2}$$

The correlations among the seven parameters are fully taken into account.

Normalizing it by the ratio in the standard model, we obtain

$$Y_\tau = 1.0008 \pm 0.0030. \tag{3}$$

The 95% confidence level upper bound[‡] is $Y_\tau < 1.0057$. Note that Ref. [6] quotes a somewhat weaker constraint on the ratio of electron and τ couplings $g_{V\tau}/g_{Ve} = 0.959 \pm 0.046$ and $g_{A\tau}/g_{Ae} = 1.0000 \pm 0.0019$, which correspond to 0.4% error in Y_τ. However, the ratios do not assume e-μ universality and they tried to separate axial and vector couplings which are not necessary for our purpose.

Second, we include the effect of the running of b-quark Yukawa coupling between m_b and m_Z scales which was not taken into account in the previous analysis [16]. We take the following procedure. We first take the value of $\overline{m}_b \equiv m_b(m_b) = 4.1$–$4.5$ GeV in the $\overline{\rm MS}$ scheme as summarized by the Particle Data Group [17]. To run the $\overline{\rm MS}$ mass from m_b to m_Z, we employ the renormalization group equation at two-loop level [18]. The numerical values of $m_b(m_Z)$ are shown in Fig. 1. The shaded region is the world average $\alpha_s(m_Z) = 0.118 \pm 0.003$ [17].[§] In this letter we take center values of $\overline{m}_b$ and $\alpha_s(m_Z)$, which correspond to $m_b(m_Z) = 3.0$GeV. We will discuss later how the results change for different choices of $\overline{m}_b$ and $\alpha_s(m_Z)$.

We do not go into the discussion of the MSSM Higgs sector in our letter. This is partly to simplify the analysis without many additional parameters in the MSSM. It is however mainly because a large contribution to R_b requires a large $\tan\beta$ with a light Higgs multiplets, which in turn implies a light charged Higgs boson in the context of the MSSM. Such a light charged Higgs boson is already strongly constrained by the CLEO measurement of the $b \to s\gamma$ rate. One needs to rely on a cancelation between the charged Higgs diagram (which always adds up with the standard model contribution) and the chargino loop which is also uncomfortably large. A light charged Higgs boson is further constrained also by $B \to \tau\nu X$ [19] and $\tau \to \mu\nu\nu$ [20]. Even though there are viable regions in the parameter space [10], we do not pursue this direction further in this letter.[¶]

[‡] The confidence level of the upper bound is determined by the one-sided Gaussian distribution.

[§] Note that this average does not include the total Z hadronic width which is consistent with our spirit to allow R_b to deviate from the SM prediction.

[¶] There is a possibility that the scalar tau loop may partially cancel the enhancement

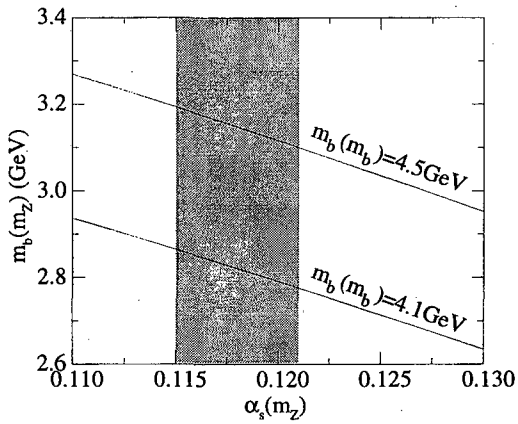

Figure 1: Dependence of b-quark mass at m_Z ($m_b(m_Z)$) on $\alpha_s(m_Z)$. Two solid lines correspond to $m_b(m_b)$=4.1 GeV and 4.5 GeV, respectively. The shaded region represents the PDG average $\alpha_s(m_Z) = 0.118 \pm 0.003$.

On the other hand, a general Type-II 2HDM allows a heavy charged Higgs boson naturally consistent with the $b \to s\gamma$ constraint, while having neutral Higgs bosons as light as 50 GeV[||]. The phenomenological viability of such a light Higgs spectrum was recently also stressed in [23]. This is the parameter range of our interest in this letter.

The 2HDM contains five physical Higgs bosons, two neutral CP even states h^0 and H^0, one CP odd state A^0, and two charged states H^+ and H^-.

in $\Gamma(Z \to \tau^+\tau^-)$ while keeping R_b large in a limited region of the parameter space. It is an interesting question whether such a cancelation is possible within the parameter space which sufficiently suppresses $b \to s\gamma$ [21].

[||] The charged Higgs boson mass must be heavier than about 244 GeV due to the constraints from $b \to s\gamma$ [22]. On the other hand, the electroweak ρ-parameter restricts the mass splitting among the Higgs bosons. For light h and A, we estimate the upper bound on the charged Higgs boson mass to be $m_{H^\pm} \sim 200$ GeV at 95% CL using the precision electroweak data given in [6]. Therefore, the 2HDM with light h and A is either only marginally consistent with these constraints, or requires some new physics to be consistent with the electroweak precision data. We simply assume in this letter that such new physics enters only oblique corrections and does not modify $Z\bar{b}$ or $Z\tau^+\tau^-$ vertices. We thank S.Kanemura for discussions on this point.

We decompose two Higgs doublets as

$$H_1 = \begin{pmatrix} \frac{1}{\sqrt{2}}(v\cos\beta + \eta_1 + i\xi_1) \\ H_1^- \end{pmatrix}, \quad H_2 = \begin{pmatrix} H_2^+ \\ \frac{1}{\sqrt{2}}(v\sin\beta + \eta_2 + i\xi_2) \end{pmatrix}. \quad (4)$$

The mass eigenstates of the Higgs bosons are related to the weak eigenstates as follows:

$$\begin{aligned} h^0 &= -\eta_1 \sin\alpha + \eta_2 \cos\alpha, \\ H^0 &= \eta_1 \cos\alpha + \eta_2 \sin\alpha, \end{aligned}$$

for lighter (h^0) and heavier (H^0) neutral CP-even Higgs bosons,

$$A^0 = \xi_1 \sin\beta + \xi_2 \cos\beta,$$

for the neutral CP-odd Higgs boson, and

$$H^- = H_1^- \sin\beta + (H_2^+)^* \cos\beta,$$

for the charged Higgs boson. At this point, we have the following free parameters: m_{h^0}, m_{H^0}, m_{A^0}, $m_{H^\pm}$, α, β. Below, we take the limit of the heavy charged Higgs boson which is possible in the general 2HDM parameter space. We do so because the loop of the charged Higgs boson and the top quark reduces R_b and hence the positive contribution to R_b is maximized in this limit. Note also that the constraint from $b \to s\gamma$ is naturally avoided in this limit as well.

We evaluated the diagrams shown in Fig. 2, and found an agreement with previous calculations [16].** All the loop factors are common for b and τ. The only differences are in the size of Yukawa coupling λ_f and the couplings to the Z boson, $g_L^f = -\frac{1}{2} - Q_f \sin^2\theta_W$ and $g_R^f = -Q_f \sin^2\theta_W$ for $f = b, \tau$. By parameterizing the loop factors from the first (second) diagram as ϵ_{hA} (ϵ_{ff}), the widths are corrected as

$$\frac{\Delta\Gamma_f}{\Gamma_f} = \frac{\lambda_f^2}{(g_L^f)^2 + (g_R^f)^2}\left[2(g_R^f - g_L^f)\frac{1}{2}\epsilon_{hA} - 4g_R^f g_L^f \epsilon_{ff}\right]. \quad (5)$$

** We ignored b-quark and τ-lepton masses in loop diagrams while we keep their Yukawa coupling constants finite. The vertex diagrams $Z \to$ virtual (Zh^0 or H^0) $\to b\bar{b}$ are proportional to $m_b \tan\beta$ but lack the $\tan^2\beta$ enhancement. For large values of $\tan\beta$ we are interested in, this contribution is subdominant and the omission of m_b in the diagram is justified. The diagrams with Nambu–Goldstone bosons in the R_ξ gauge are the same as in the SM and hence are not enhanced for large $\tan\beta$.

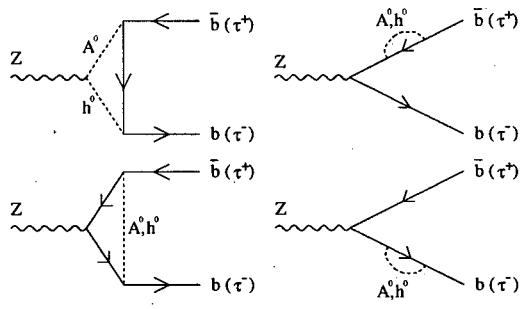

Figure 2: Feynman diagrams with the neutral Higgs bosons in the 2HDM which contribute to the partial widths $Z \to b\bar{b}$ and $\tau^+\tau^-$ and have the $\tan^2\beta$ enhancement.

Both ϵ_{hA} and ϵ_{ff} turn out to be positive. For both b and τ, $g_R^f - g_L^f = 1/2$ and hence the first term in the bracket is simply $\epsilon_{hA}/2$. On the other hand, the second term is $0.25\epsilon_{ff}$ for τ and $0.13\epsilon_{ff}$ for b, and hence is less important for b. In order to simplify the discussion we take $\alpha = \beta$ where the H^0 is almost decoupled from leptons and down-quarks. In this case h^0 has the enhanced Yukawa coupling for large $\tan\beta$ while H^0 is the SM Higgs boson. The value of m_{H^0} is irrelevant to the following discussion.[††] One can easily generalize the analysis for $\alpha \neq \beta$, but the strong correlation remains the same and hence the final conclusion as well. The discussion then depends only on the following three parameters: $\tan\beta$, m_{A^0}, and m_{h^0}.

The correction to Y_τ from the neutral Higgs loops is shown in Fig. 3. This is a contour plot of the ΔY_τ induced from the neutral Higgs loops in the (m_{h^0}, m_{A^0}) plane with $\tan\beta = 70$. The shaded region is excluded by the negative direct search for $Z \to A^0\ h^0$ $(m_{h^0} + m_{A^0} > m_Z)$. The present experimental bound $\Delta Y_\tau < 0.0057$ is shown by the solid line, and is competitive with the constraint from the direct search. The excluded region from Y_τ is wider for larger $\tan\beta$ because the correction is proportional to $\tan^2\beta$.

The correction to R_b from the neutral Higgs loops is shown in Fig. 4, as a contour plot of the $\Delta R_b/R_b$ induced from the neutral Higgs loops with

[††] Note that there is a dependence on the mass of the standard model Higgs boson at 0.2% level when one predicts partial widths theoretically. However this dependence comes through oblique corrections and cancels in the ratios R_b and Y_τ.

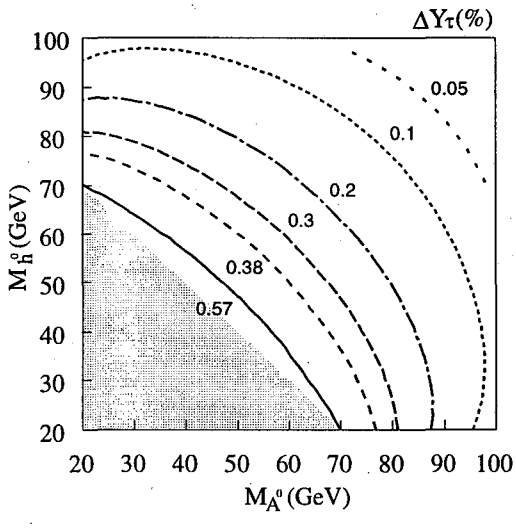

Figure 3: A contour plot of the $\Delta Y_\tau / Y_\tau$ induced by the neutral Higgs bosons on the (m_{h^0}, m_{A^0}) plane with $\tan\beta = 70$. The shaded region is excluded by the negative search for $Z \to A^0\ h^0$ $(m_{h^0} + m_{A^0} > m_Z)$.

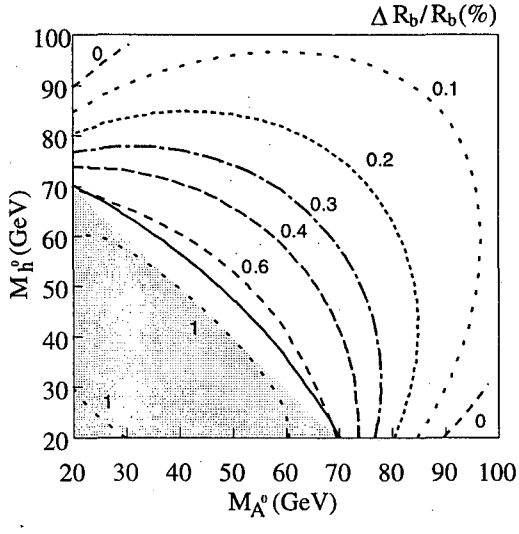

Figure 4: A contour plot of the $\Delta R_b / R_b$ induced from the neutral Higgs loops on the (m_{h^0}, m_{A^0}) plane with $\tan\beta = 70$. The shaded region is excluded by the negative search for $Z \to A^0\ h^0$ $(m_{h^0} + m_{A^0} > m_Z)$. The solid line represents the bound from $\Delta Y_\tau < 0.57\%$.

$\tan\beta = 70$. The solid line represents the 95% CL upper bound $\Delta Y_\tau < 0.57\%$. Recall that the central value of the 1996 world average is $\Delta R_b/R_b = 0.97\%$.

As can be seen from Figs. 3 and 4, both $\Delta R_b/R_b$ and ΔY_τ become maximum in a region with $m_{A^0} = m_{h^0}$. This is particularly true for R_b because ϵ_{ff} is less important and ϵ_{hA} is maximized when $m_{A^0} = m_{h^0}$. In order to obtain the most conservative constraint, we take $m_{A^0} = m_{h^0}$ which maximizes R_b while keeping Y_τ small. In Fig. 5 we show the correlation between $\Delta R_b/R_b$ and ΔY_τ with $\tan\beta = 50, 70, 90$, assuming $m_{A^0} = m_{h^0}$. Marks in each lines correspond to $m_{A^0} = m_{h^0} = 50, 60, 70, 80, 90, 100, 150$ GeV. The shaded region is the current experimental value of ΔY_τ at one standard deviation, and the solid line is the 95% upper bound $\Delta Y_\tau < 0.57\%$. From this correlation, the current bound on ΔY_τ constrains $\Delta R_b/R_b < 0.73\%$. It is interesting that the 1996 world average $\Delta R_b/R_b = 0.97\%$ is well beyond the 95% CL upper bound.

Finally, we would like to discuss dependence of the upper bound on R_b on the b-quark mass and $\alpha_s(m_Z)$. The upper bound on R_b is proportional to $m_b^2(m_Z)$, and then larger $\alpha_s(m_Z)$ or smaller $\overline{m}_b$ gives a more stringent constraint. If we take $\alpha_s(m_Z)$=0.121 (0.115) with $\overline{m}_b$=4.3GeV, it can be found from Fig. 1 that the upper bound on $\Delta R_b/R_b$ becomes 0.71% (0.75%). A lattice calculation on Υ spectroscopy gives $\overline{m}_b = 4.0 \pm 0.1$GeV [24], and a recent QCD sum rule analysis using more recent data of the electronic partial width of $\Upsilon(9460)$ in Ref. [25] favors a smaller value 4.1 GeV than that in Ref. [18]. If we use a relatively small value $\overline{m}_b$ =4.1GeV, the upper bound is reduced to be 0.65%. On the other hand, the Heavy Quark Effective Theory gives a lower bound on $\overline{m}_b$ ($\overline{m}_b > 4.26$GeV in Ref. [26] and $\overline{m}_b > 4.2$GeV in Ref. [27]). If $\overline{m}_b$=4.5GeV, the upper bound weakens to 0.81%.

In summary, we pointed out that there is a $\tan^2\beta$ enhancement in $\Gamma(Z \to \tau^+\tau^-)$ induced by the neutral Higgs boson loops in the Type-II 2HDM, whenever there is a similar enhancement to R_b. We found that the current experimental upper bound $Y_\tau < 1.0057$ at the 95% confidence level places an upper bound $\Delta R_b/R_b < 0.73\%$ (for $\overline{m}_b = 4.3$ GeV and $\alpha_s(m_Z) = 0.118$), which can be compared to the 1996 world average: $\Delta R_b/R_b = 0.97\% \pm 0.51\%$.

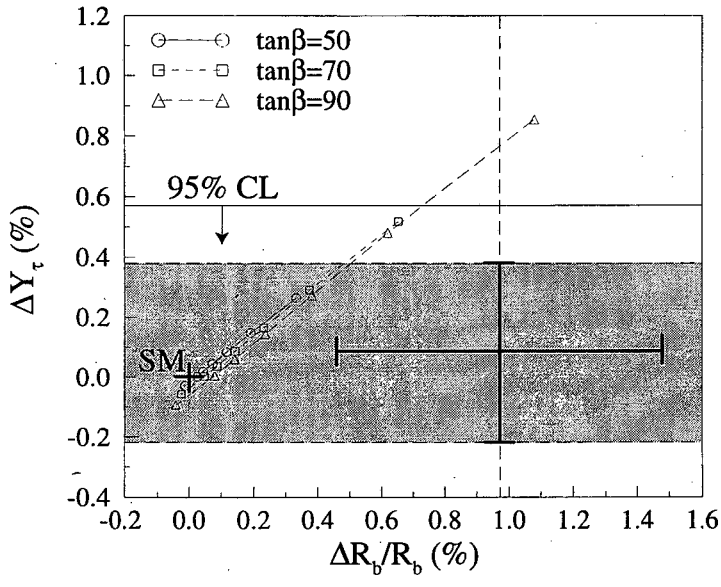

Figure 5: Correlation between between $\Delta R_b/R_b$ and ΔY_τ. Here we assume $m_{A^0} = m_{h^0}$ which maximizes R_b relative to Y_τ. The curves are for $\tan\beta = 50, 70, 90$. Marks on each curves correspond to $m_{A^0} = m_{h^0} =$ 50, 60, 70, 80, 90, 100, 150 GeV. Shaded region is the current experimental value of ΔY_τ at one standard deviation, and the solid line is the 95% CL upper bound $\Delta Y_\tau < 0.57\%$.

Acknowledgments

S.K. would like to thank Y. Okada, M. Tanabashi, M. Nojiri, S. Kanemura, and N. Tsuda for helpful discussions. The work of J.H. was supported by the U.S. Department of Energy under Contract DE-FG02-94ER40823. The work of H.M. was supported by the U.S. Department of Energy under Contract DE-AC03-76SF00098 and in part by the National Science Foundation under grant PHY-95-14797. H.M. was also supported by the Alfred P. Sloan Foundation.

References

[1] The LEP Electroweak Working Group, CERN-PPE/95-172 (1995).

[2] SLD Collaboration, "Measurement of R_b at SLD", contributed paper to ICHEP96, Warsaw, 25-31, July 1996 (PA10-23).

[3] ALEPH Collaboration, "Measurement of R_b using a lifetime-mass tag" and "A measurement of R_b using mutually exclusive tags", contributed papers to ICHEP96, Warsaw, 25-31, July 1996 (PA10-14 and PA10-15).

[4] DELPHI Collaboration, "Measurement of the partial decay width R_b with the DELPHI detector at LEP", contributed papers to ICHEP96, Warsaw, 25-31, July 1996 (PA10-61).

[5] K. Ackerstaff, *et al.* (OPAL Collaboration), CERN-PPE-96-167.

[6] LEP Electroweak Working Group and the SLD Heavy Flavor Group, CERN-PPE-96-183 (1996).

[7] G. Kane, talks presented at 28th International Conference on High Energy Physics (ICHEP96), Warsaw, 25–31, July 1996.

[8] S. Pokorski, plenary talk presented at 28th International Conference on High Energy Physics (ICHEP96), Warsaw, 25–31, July 1996. IFT-20-96A, hep-ph/9611451.

[9] P. Langacker, plenary talk presented at 1996 Annual Divisional Meeting (96) of the Division of Particles and Fields of the American Physical Society, 10–15, August 1996, Minneapolis, Minnesota.

[10] G. Altarelli and R. Barbieri, *Phys. Lett.* **B253** (1991) 161;
M. Boulware and D. Finnell, *Phys. Rev.* **D44** (1991) 2054;
A. Djouadi, G. Girardi, C. Verzegnassi, W. Hollik, and F.M. Renard, *Nucl. Phys.* **B349** (1991) 48;
G. Altarelli, R. Barbieri, and S. Jadach, *Nucl. Phys.* **B369** (1992) 3; *erratum*, *Nucl. Phys.* **B376** (1992) 444;
G. Altarelli, R. Barbieri, and F. Caravaglios, *Nucl. Phys.* **B405** (1993) 3;*Phys. Lett.* **B314** (1993) 357;
J.D. Wells, C. Kolda, and G.L. Kane, *Phys. Lett.* **B338** (1994) 219;

X. Wang, J.L. Lopez, and D.V. Nanopoulos, *Phys. Rev.* **D52** (1995) 4116;
G.L. Kane, R.G. Stuart, and J.D. Wells, *Phys. Lett.* **B354** (1995) 350;
E. Ma and D. Ng, *Phys. Rev.* **D53** (1996) 255;
P. Bamert, C.P. Burgess, J.M. Cline, D. London, and E. Nardi, *Phys. Rev.* **D54** (1996) 4275;
A. Brignole, F. Feruglio, and F. Zwirner, *Z. Phys.* **C71** (1996) 679;
M. Drees, R.M. Godbole, M. Guchait, S. Raychaudhuri, and D.P. Roy, *Phys. Rev.* **D54** (1996) 5598;
P.H. Chankowski and S. Pokorski, *Nucl. Phys.* **B475** (1996) 3.

[11] J. Ellis, J.L. Lopez, and D.V. Nanopoulos, CERN-TH-96-354, hep-ph/9612376.

[12] G. Kane and J.D. Wells, *Phys. Rev. Lett.* **76** (1996) 869.

[13] J. Kalinowski and M. Krawczyk, *Acta Phys. Polon.* **B27** (1996) 961.

[14] ALEPH Collaboration, "Search for a Light Higgs Boson in the Yukawa Process", contributed papers to ICHEP96, Warsaw, 25-31, July 1996 (PA13-027).

[15] A. G. Cohen, D. B. Kaplan, and A. E. Nelson, *Ann. Rev. Nucl. Part. Sci.* **43** (1993) 27.

[16] A. Denner, R.J. Guth, W.Hollik, and J.H. Kühn, *Z. Phys.* **C51** (1991) 695.

[17] Particle Data Group, R.M. Barnett *et al.*, *Phys. Rev.* **D54** (1996) 1.

[18] J. Gasser and H. Leutwyler, *Phys. Rep.* **87** (1982) 77.

[19] Y. Grossman, H. E. Haber, and Y. Nir, *Phys. Lett.* **B357** (1995) 630; J. A. Coarasa, R. A. Jimenez, and J. Sola, UAB-FT-407, hep-ph/9701392.

[20] W.J. Marciano, *Nucl. Phys.* **B (Proc.Suppl.) 40** (1995) 3.

[21] S. Kiyoura, work in progress.

[22] M.S.Alam *et al.*(CLEO), *Phys. Rev. Lett.* **74** (1995) 2885.

[23] M. Krawczyk, IFT-96-28, hep-ph/9612460.

[24] C.T.H. Davies, K. Hornbostel, A. Langnau, G.P. Lepage, A. Lidsey, C.J. Morningstar, J. Shigemitsu, and J. Sloan, *Phys. Rev. Lett.* **73** (1994) 2654.

[25] L.J. Hall, R. Rattazzi, and U.Sarid, *Phys. Rev.* **D50** (1994) 7048.

[26] Z. Ligeti and Y. Nir, *Phys. Rev.* **D49** (1994) 4331.

[27] M. Luke and M.J. Savage, *Phys. Lett.* **B321** (1994) 88.

Ernest Orlando Lawrence Berkeley National Laboratory
One Cyclotron Road | Berkeley, California 94720

Prepared for the U.S. Department of Energy under Contract No. DE-AC03-76SF00098