LBNL-39909
UC-401

# ERNEST ORLANDO LAWRENCE BERKELEY NATIONAL LABORATORY

# Safety Procedures for the Electron Spectroscopy of Actinides at the ALS

D.K. Shuh, N.M. Edelstein, and J.J. Bucher
**Chemical Sciences Division**

January 1996

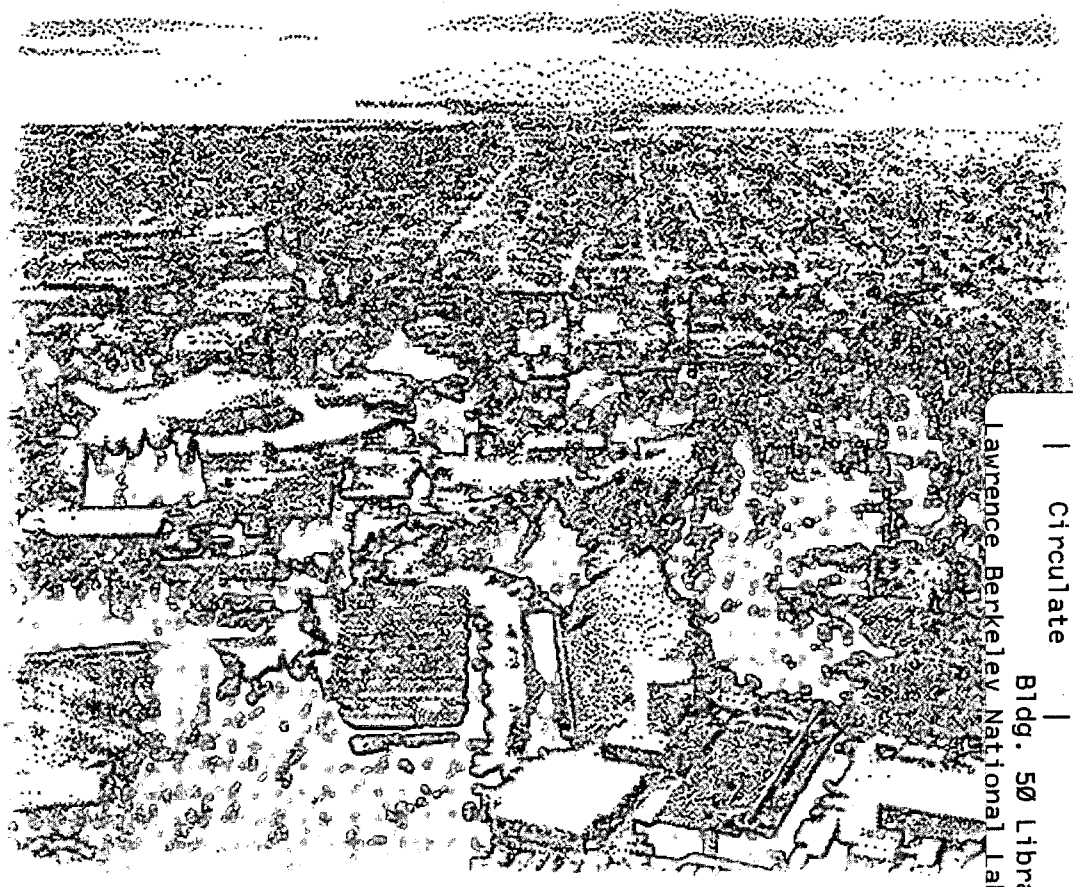

REFERENCE COPY
Does Not
Circulate
Bldg. 50 Library - Ref.
Lawrence Berkeley National Laboratory
LBNL-39909
Copy 1

## DISCLAIMER

This document was prepared as an account of work sponsored by the United States Government. While this document is believed to contain correct information, neither the United States Government nor any agency thereof, nor the Regents of the University of California, nor any of their employees, makes any warranty, express or implied, or assumes any legal responsibility for the accuracy, completeness, or usefulness of any information, apparatus, product, or process disclosed, or represents that its use would not infringe privately owned rights. Reference herein to any specific commercial product, process, or service by its trade name, trademark, manufacturer, or otherwise, does not necessarily constitute or imply its endorsement, recommendation, or favoring by the United States Government or any agency thereof, or the Regents of the University of California. The views and opinions of authors expressed herein do not necessarily state or reflect those of the United States Government or any agency thereof or the Regents of the University of California.

LBNL-39909
UC-401

# Safety Procedures for the Electron Spectroscopy of Actinides at the ALS

D.K. Shuh, N.M. Edelstein, and J.J. Bucher

Chemical Sciences Division
Ernest Orlando Lawrence Berkeley National Laboratory
University of California
Berkeley, California 94720

January 1996

This work was supported by the Director, Office of Energy Research, Office of Basic Energy Sciences, Chemical Sciences Division, of the U.S. Department of Energy under Contract No. DE-AC03-76SF00098.

# Safety Procedures for the Electron Spectroscopy of Actinides at the ALS

D. K. Shuh, N. M. Edelstein, and J. J. Bucher
Chemical Sciences Division
Berkeley Laboratory

## Contents

| | |
|---|---|
| Summary | 1 |
| Experimental Procedures | |
| Sample Preparation | 2 |
| Procedures at the ALS | 4 |
| Emergency Procedures | 8 |
| List of Figures | 9 |
| List of Tables | 10 |
| Figures and Tables | 11 |
| ALS Experimental Forms | 30 |
| Safety Procedures (Nov.1994) | 33 |

Prepared Jan. 1996

# Addendum to the ALS Experimental Safety Form Renewal for Actinide Microspot Experiments

Jerry Bucher, Actinide Chemistry Group, CSD, LBNL, (510) 486-4484
Norman Edelstein, Actinide Chemistry Group, CSD, LBNL, (510) 486-5624
David Shuh, Actinide Chemistry Group, CSD, LBNL, (510) 486-6937

18 Jan. 1996

## SUMMARY

This is an addendum to the ALS Experimental Safety Form Renewal for the continuation of actinide microspot experiments on beamlines 7.0. There are several modifications to the previously approved procedures. There is an increase in the amount of allowable material of the low activity isotopes $^{238}U$, $^{237}Np$, $^{242}Pu$, and $^{248}Cm$. There is also the addition of $^{99}Tc$ and the low activity isotopes $^{232}Th$ and $^{243}Am$ to the list of permissible sample materials. All of the materials are alpha-emitters with negligible gamma fields with the exception of $^{99}Tc$ which is a beta-emitter. There is a series of new experiments that requires the use of a crystal cleaver in the preparation chamber of the ultraESCA endstation. The beamline 7.0 ultraESCA endstation has been suitably modified to permit the safe cleave of YUPd alloy rectangular ingots. All of the sample materials are solids. The exact nature and composition of the samples are delineated in the sample preparation section that follows. A corresponding Radiological Work Authorization (RWA) must be issued for this work at ALS since the material amounts exceed those in the Low Activity Source (LAS) guidelines in Table I and those in the Values for Exemption of Sealed Source Inventory in Table II. The preliminary date for the next run of these sample materials has been tentatively scheduled in early Feb. 1996 and this will be with the uranium cleave alloys, not the transuranic materials.

## EXPERIMENTAL PROCEDURES

### *Sample Preparation*

Sample materials sent from institutions outside of LBNL will be shipped to:

Bette Muhammad
EH & S Receiving
LBNL
1 Cyclotron Road
Berkeley, CA 94720
(510) 486-7602

C/O ALS Experimenter
Local ALS contact phone #.

The materials will be forwarded to the Actinide Chemistry Laboratory in Building 70A-1145 for preparation, characterization, packaging, and subsequent transport to the ALS via EH&S personnel.

The sample preparation will follow the previously approved procedures and utilize some new preparation techniques that require slightly different experimental procedures. The initial experience gained from sample preparation and experimental work at beamline 7.0 will safely permit a slight increase in the amount of radioactive material employed compared to earlier experiments. Thus, this safety addendum reflects allowable material amounts that are 3-5 times greater than those previously used. Additionally, there are some new elemental isotopes on the list of those permitted. The new amounts and isotopes are shown on the ALS Experimental Modification form. All sample preparation and characterization of the activity of the samples will be done in Bldg. 70A-1129, 1145 under existing RWA procedures (Edelstein #1020). All mounting and physical handling of the samples, except for the loading and unloading into the beamline 7.0 endstation vacuum chamber, will be at this location. All samples will be characterized by alpha spectroscopy to ensure that the amount of activity is within work permit limits and to ensure that any part of the sample holder that comes in contact with the vacuum chamber sample manipulation apparatus is free from activity.

*Aqueous Preparation*

The radionuclides used as sample materials will be prepared by dilution and delivered to the surface of a Pt counting disk or to a graphite disk (with a thin layer of Pt on the backside) using a microliter pipette. The resulting material will be primarily oxides of the particular radionuclide. The aqueous solvent will be removed by inductive heating. The radionuclide will be bonded to the substrate during this process as well. The samples will be observed under a microscope and the radioactivity characterized in a calibrated alpha spectrometer to determine the total activity. The amount of material will be within the limits specified on the ALS Modification form dated 12 Jan. 1996 that are informally derived from *Operational Health Physics: Laboratory Operations and Good Work Practices* that is attached as Table III. The adhesion of the radionuclide to the substrate will be determined by testing sample structures to ensure that there is no loose active material. The properties of the various isotopes to be used as sample materials are summarized in the Table IV attachments. The sample isotopes are never completely isotopically pure, thus a substantial portion of the total activity of the radionuclide sample may result from trace amounts of isotopic impurities.

*Uranium Alloy Cleave Bar Preparation*

The cleave bar preparation will entail the examination of the integrity of the ingot mounting on the sample holder and the determination of the total activity of the sample. There may be some cleave bar handling in accordance with procedures in RWA #1020. The uranium alloy cleave bars are about 5 g, with a total uranium content of less than 0.5 g each and will be shipped from the Univ. of Michigan. The exact composition of the uranium alloy is $Y_{1-x}U_xPd_3$

*Special Samples*

Special samples will be handled on a case by case basis with reference to this document.

*Thin Film Samples*

Thin film metallic samples of the radioactive materials will be prepared off site on suitable substrates and transported to LBNL. These samples will be

mounted to sample holders and the total activity characterized. Similar thin film samples may also be prepared at LBNL.

*Sample Mounting and Packaging*

The radionuclide substrate and microsample will be affixed with spring-loaded clips, spot-welded clips, or bolted directly to sample holders used by beamline 7.0. The cleave ingots to be used in the uranium alloy experiments will be mounted as shown in Figure 1 and wired into place (this is common practice for cleaving). All samples will be appropriately labeled and packaged in ice cream cartons for safe transport to the ALS. The EH&S monitor will certify that the container is non-active and establish that the activity of the sample is within the limits of the approved work permits for the ALS. The sample container will be labeled "CAUTION-Radioactive Material" to warn personnel that a radioactive material is present. The samples will be transported to the ALS, with prior notification of the ALS EH&S monitor, in accordance with EH&S regulations. The samples will be transported, no more than two at a single time, by LBNL vehicle to the ALS.

***Procedures at the ALS***

*General Procedures at Beamline 7.0*

There will be no handling of the sample on the experimental floor with exception of unpacking, loading, alpha characterization of, unloading, and re-packaging to transport back to the 70A-1145 laboratories. The ALS control room will be notified prior to the commencement of any experimental activities at beamline 7.0. and will be informed upon completion of the experimental program. Only two samples at a time will be brought to the ALS and there will be a maximum of four samples resident on the ALS floor at any time (during a full sample exchange at beamline 7.0) just prior to the removal of two samples from the ALS floor for transport back to radiochemistry lab in Building 70A-1145. All loading and unloading activities will be done with the ALS EH&S monitor present.

The samples will be brought to the ALS from the preparation laboratories in conjunction with EH&S, as per standard operating procedures. The samples will be loaded into the experimental chamber with a procedure utilizing laboratory coats, gloves, alpha meter, TLD/film badges, and beta-gamma meters that will be brought to the ALS by appropriately trained/supervised personnel from the Actinide Chemistry Group. A temporary Radiological Materials Area (RMA) will be

established, labeled, and casual access restricted. The sample/holders will be removed from the ice cream cartons one at a time, placed in the temporary RMA, and an alpha assay performed with an appropriately calibrated survey meter and geometric positioning equipment by the ALS EH&S monitor. The results will be recorded on an approved logsheet form and placed in the laboratory notebook. An example of this form is attached as Fig. 2 and a copy of the logsheets will be provided to the ALS EH&S monitor upon completion of the experiments. The samples will be examined under a microscope with a recording CCD camera. The samples will then be loaded into the sample load lock. A schematic of the beamline 7.0 ultraESCA endstation is shown in Fig. 3. The sample chamber or endstation will be labeled "CAUTION-Radioactive Material" to warn personnel that a radioactive sample is present. Once the radioactive samples are in the endstation, the temporary RMA will be surveyed and re-established as a non-RMA if no activity is found. The sample will be transferred under vacuum into the photoemission spectrometer on beamline 7.0 and the electron spectroscopy begun. Any other specialized in vacuum preparation or handling of the sample materials will be described in a following section that addresses procedures specific to certain sample types.

The beamline 7.0 endstation is an RMA when there are radioactive samples in the chamber, therefore RMA procedures must be employed regarding removal of samples or any other experimental equipment from within the vacuum envelope of the endstation until the endstation is declared a non-RMA. For example, this requires that a non-radioactive sample be handled in the same fashion as a radioactive sample if it is removed from the vacuum chamber while operating as an RMA.

Sample/holders will be removed from the beamline 7.0 endstation by re-establishing the temporary RMA work area and removing the samples/holders (one at a time) from the vacuum system. The respective samples will be characterized by alpha spectroscopy in the temporary RMA to ensure that no material has been lost. If no material has been lost, the experiments may proceed. The samples/holders will be placed in ice cream cartons for transport to the 70A-1145 laboratory. At this time, two new samples/holders may be removed (one at a time) from the ice cream cartons and loaded into the vacuum system as described in the loading procedures above. Thus, there will briefly be four samples on the ALS floor during a full sample exchange. After the new samples have been successfully loaded, the temporary RMA will be surveyed and declared a non-RMA. The samples/holders

removed from the endstation will be re-assayed by alpha spectroscopy in the Bldg. 70A-1145 laboratory.

Upon successful completion of the experiment and the documented removal of all samples as described above, swipe(s) will be taken of the accessible sample transfer apparatus. The beamline 7.0 endstation will be declared a non-RMA and the signs removed after successful swipe(s) results. Swipe(s) of the vacuum chamber will also be taken after the chamber is vented to atmosphere for the first convenient opportunity following the completion of these experiments. The swipes will be performed by the ALS EH&S monitor and recorded on a logsheet.

All of the EH&S assistance will be scheduled as far in advance as experimentally feasible and will be directed through Keith Heinzelman, LBNL ALS EH&S radiation safety monitor (Bldg. 80A, x6212) and Jim Hayes (Bldg. 70A).

*Procedures for the Experiments Requiring the Cleavage of Uranium Alloy Samples*

A series of new experiments on requires the use of a cleaver, shown in Fig. 4, to cleave a metallic, rectangular bar composed of an uranium alloy to expose a pristine surface for electron spectroscopy (sample/holder shown in Fig. ). This uranium alloy sample will contain ~0.5 g of $^{238}U$. This experiment poses additional complications since part of the cleave bar will drop to the bottom of the vacuum chamber upon a successful cleave and will have to be retrieved at some point. Additionally, there will be the generation of some small particles and dust under UHV conditions resulting from the cleave in the chamber. Furthermore, there is sometimes the need to slightly scrape the sample bar with cleaver to prepare the surface and this will result in some small particulates as well. The cleaver must also be made compatible with the existing sample transfer and the cleave must take place in a portion of the vacuum chamber that is remote from the parts that are normally used. The sample/holder will be cooled to 77K in the main spectrometer.

The endstation will be modified to accommodate the cleaver, provide a remote location for the cleave, interface to the sample transfer mechanism, and to provide a landing zone for the cleave bits. The chamber will be modified as shown in Figs. 3 and 5. The sample when cleaved will be held in a horizontal manipulator. A chip funnel will route the large cleave bits into an isolated catcher. The large chips can be removed be closing the 2.75" gate valve after the experiment and can be placed back in service by pumping through the right angle valve.

During the experiment the entire endstation will be labeled as an RMA but as result of the cleaving operation, not all of the active material will exit with the sample/holder assembly. Thus, the normal procedures for alpha counting will continue to be followed but there will not be complete recovery of the sample material or its associated activity. Thus, upon completion of the experimental program, the 2.75" gate valve will be closed and the preparation chamber labeled as a Radioactive Storage Area (RSA) and removed from the RMA designation. It is possible that there may be a extremely small amount of dust or a few tiny sample bits that do not fall into the catcher and remain at the lower portion of the cleaver cross. Designated as an RSA, experimental procedures may proceed without RMA constraints. The cleaver will not be used for any other experiments.

The beamline 7.0 endstation is a multi-purpose endstation and the researchers involved at beamline 7.0 would like to continue experimentation without having to vent the preparation section that includes the cleaver assembly until a later date when beam from the ALS is not available. There are no chemical operation or processes that would affect or mobilize the uranium material that does not fall into the catcher. Therefore, at the first convenient opportunity, the catcher will emptied and the cleaver section vented. The ALS EH&S monitor will swipe the cleaver chamber and remove any loose material therein. The cleaver cross (including the catcher assembly) will then be removed from the rest of the preparation chamber, sealed and bagged, and transported to the laboratory in Bldg. 70A-1145. The cleaver cross (including cleaver)will be thoroughly cleaned in preparation for re-use in the future and will be certified as non-radioactive before connection to the beamline 7.0 endstation. The designation of the chamber as a RMSA will be removed. All waste materials from the experiment will be disposed of by the Actinide Chemistry Group.

*Thin Film Samples*

The thin film samples will be metallic, oxides, or an alloy that are permanently bonded to a substrate that will be affixed to the sample holder.

*Special Samples*

There may be small particulates and other samples. The most important consideration is the mounting or affixing of the radioactive material to the sample holder such that none is lost during the operations. If significantly different from the work described in this document, each will be handled ion a case by case basis.

***Emergency Procedures***

The RWA will be present on the beamline and in case of a spill or other accident involving the radioactive material, EH&S will be immediately notified. A small spill kit will be brought to the ALS.

## List of Figures

1. Diagram illustrating how the uranium ingot will be mounted on the sample holder for cleavage.
2. Example of the radiation survey form to be kept and placed in the experimental notebook.
3. General schematic of the ultraESCA endstation at Beamline 7.0 at the ALS.
4. Close-up sketch of the crystal cleaver.
5. Detailed schematic of cleaver cross used as a preparation chamber in the uranium ingot experiment.

## List of Tables

1. Summary of low activity source (LAS) parameters that determine the requirements for use of radioactive materials without an RWA.
2. Summary of the values for exemption of sealed source inventory.
3. Exerpts from a British Handbook of Laboratory Practices classifying the general hazard categories and required safety precautions for working with various radionuclides under specific laboratory conditions.
4. Table of Radioactive Isotopes information for the radionuclides to be use in the experiments.

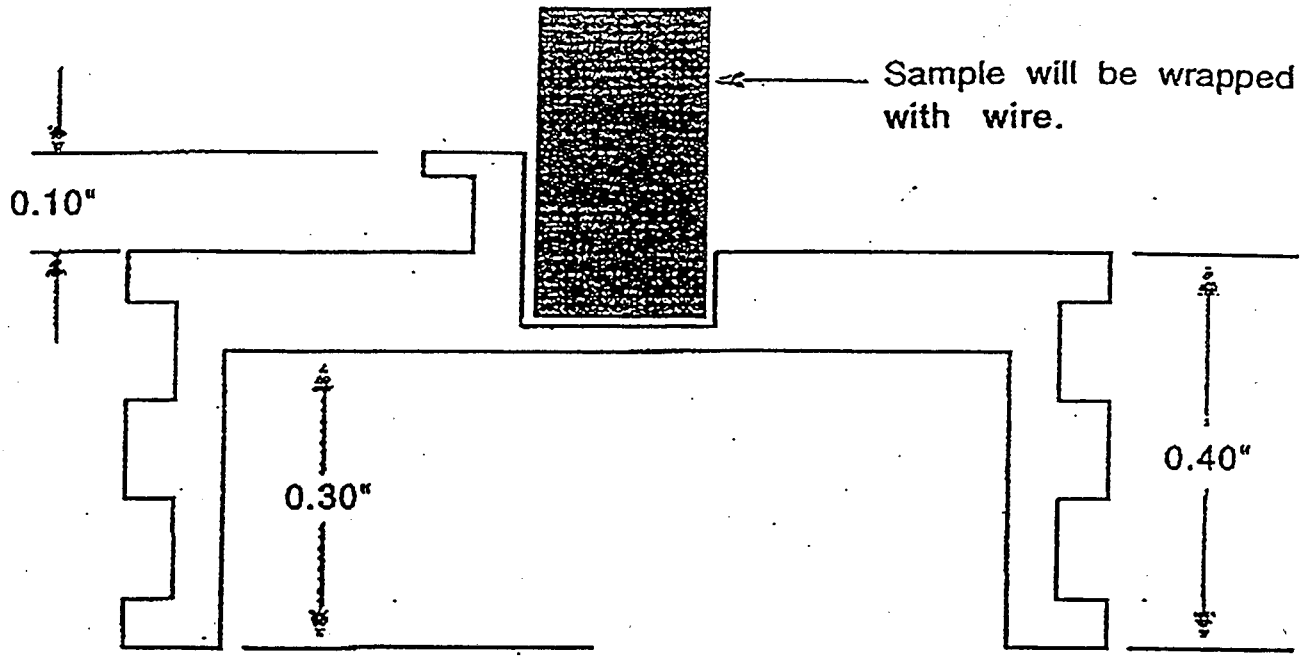
Sample will be wrapped with wire.
0.10"
0.30"
0.40"

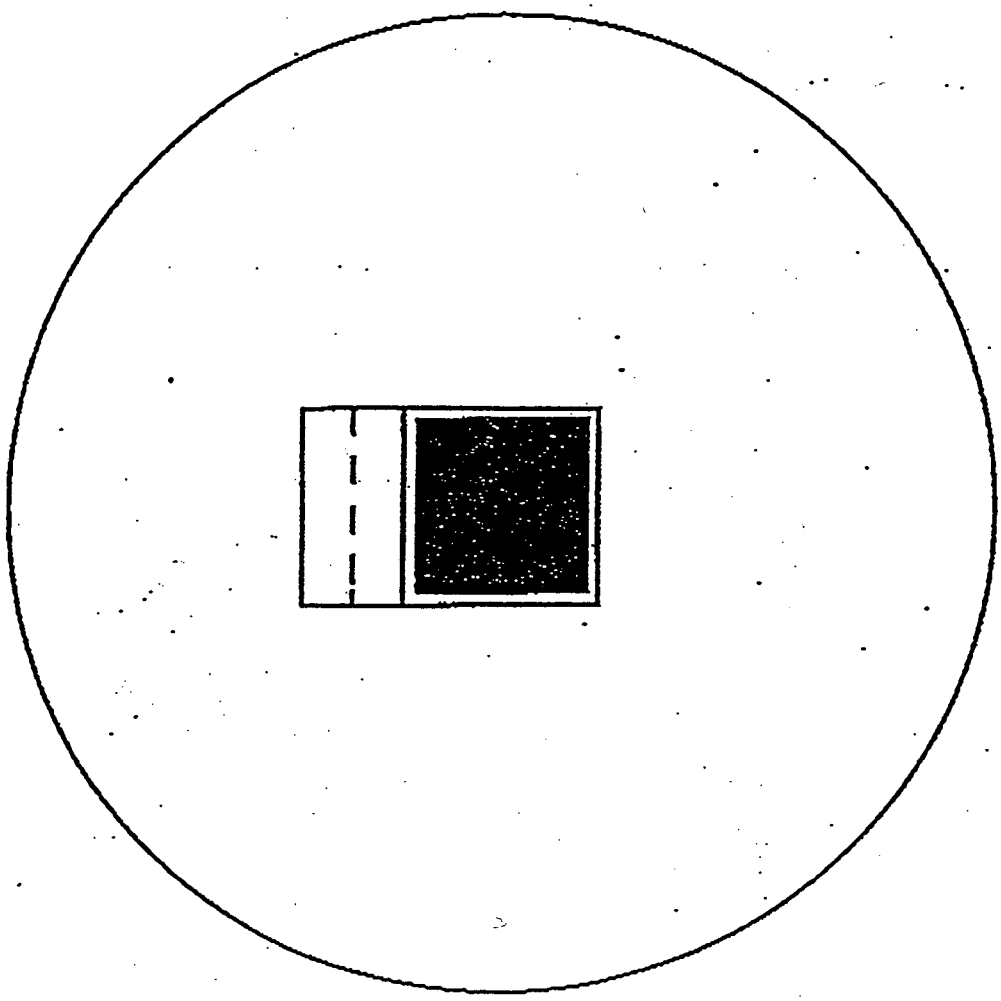

RWA#1007 - **CONTAMINATION SURVEY RESULTS** - ALS BEAMLINE_____

DATE:_____ METER#:_____ SOURCE CHECK:_____ BKG:_____

LOCATION: _____ METER READING: _____

_____ _____

_____ _____

_____ _____

_____ _____

SURVEYOR:_____

---

DATE:_____ METER#:_____ SOURCE CHECK:_____ BKG:_____

LOCATION: _____ METER READING: _____

_____ _____

_____ _____

_____ _____

_____ _____

SURVEYOR:_____

---

DATE:_____ METER#:_____ SOURCE CHECK:_____ BKG:_____

LOCATION: _____ METER READING: _____

_____ _____

_____ _____

_____ _____

_____ _____

SURVEYOR:_____

---

DATE:_____ METER#:_____ SOURCE CHECK:_____ BKG:_____

LOCATION: _____ METER READING: _____

_____ _____

_____ _____

_____ _____

_____ _____

SURVEYOR:_____

---

# ultraESCA UHV Layout

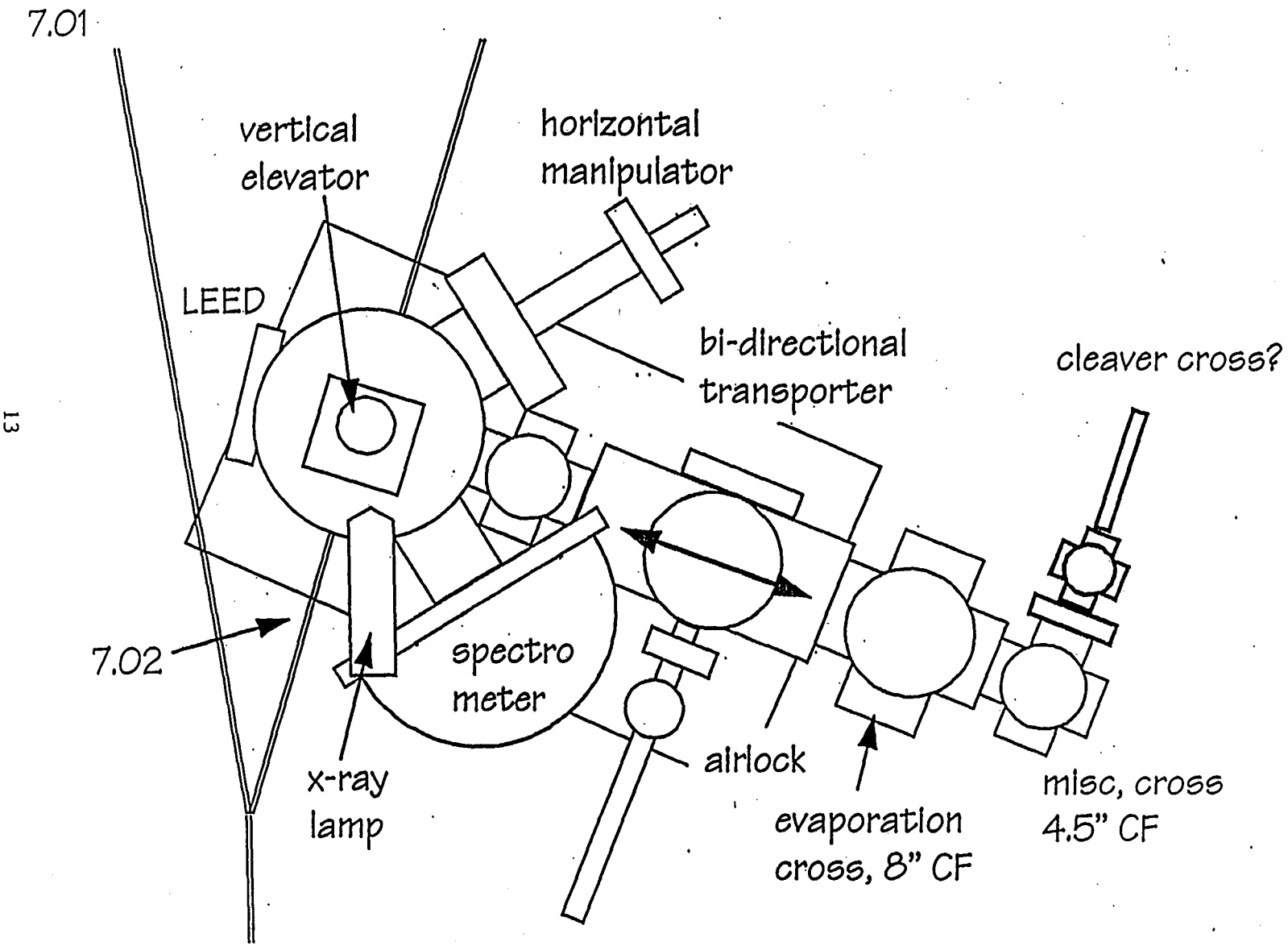

# Sketch of the Cleaver

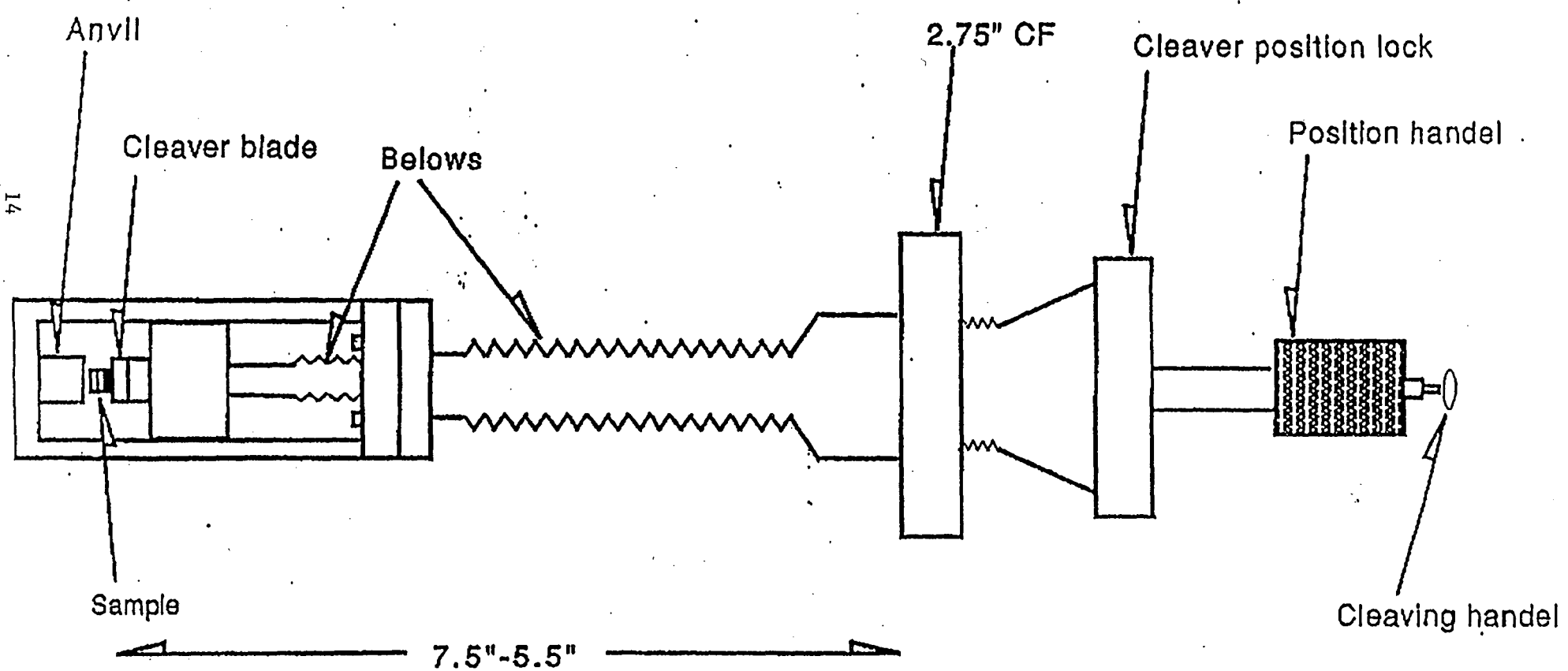

# J. Allen Cleaver Cross

11/27/95

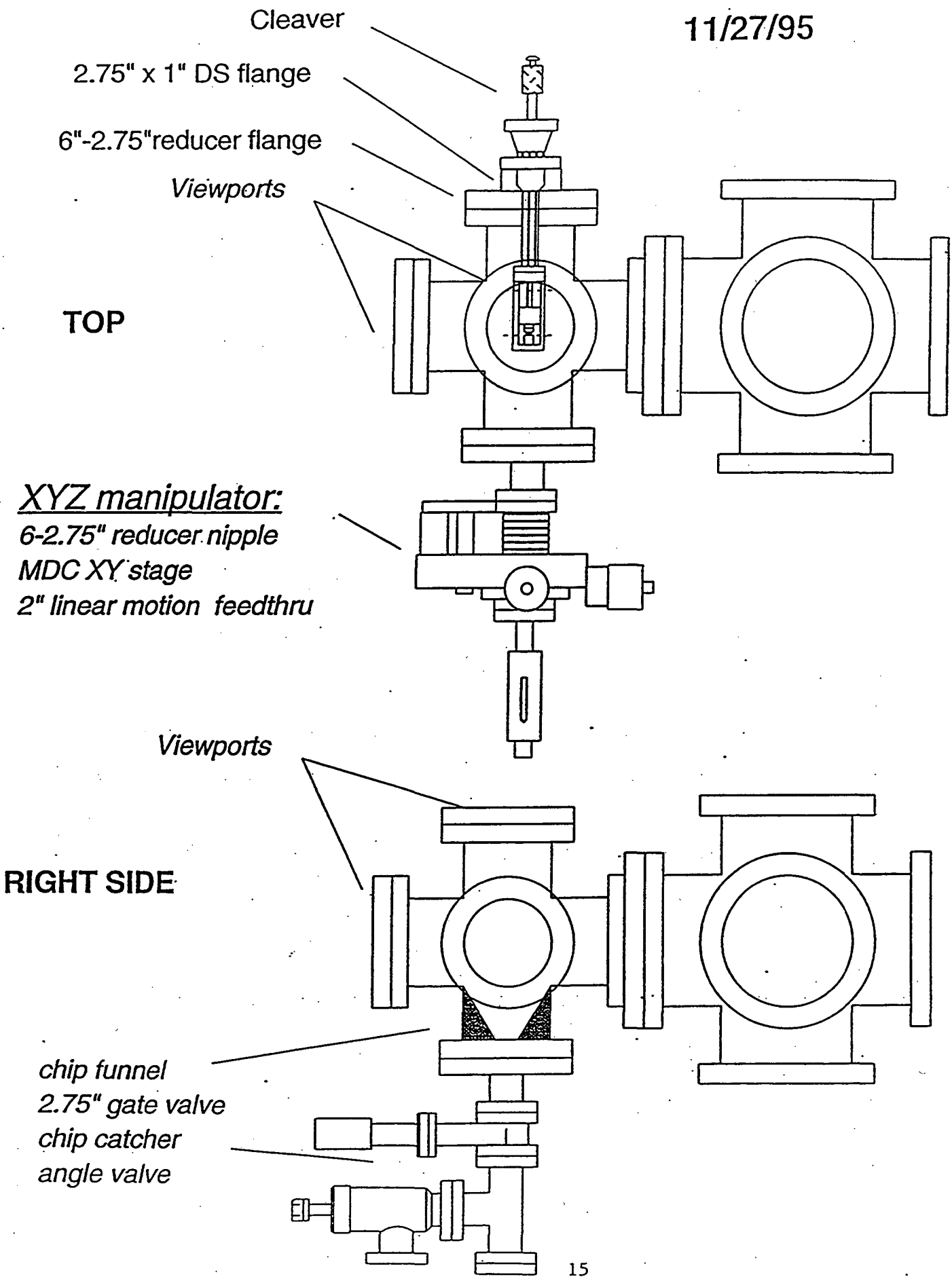

LESS THAN 10 samples in possession, SINGLE PROJECT REQUIRES "LAS" ⟶ NO RWA REQUIRED



## Low Activity Source (LAS) Quantities

**Less than 30 µCi ($1 \times 10^7$ Bq)**

| | | | | | | | |
|---|---|---|---|---|---|---|---|
| H-3 | Be-7 | C-14 | S-35 | Ca-41 | Ca-45 | V-49 | Mn-53 |
| Ge-55 | Ni-59 | Ni-63 | As-73 | Se-79 | Rb-87 | Tc-99 | Pd-107 |
| Cd-113 | In-115 | Te-123 | Cs-135 | Ce-141 | Gd-152 | Tb-157 | Tm-171 |
| Ta-180 | W-181 | W-185 | W-188 | RE-187 | Tl-204 | | |

**Less than 3 µCi ($1 \times 10^5$ Bq)**

| | | | | | | | |
|---|---|---|---|---|---|---|---|
| P-32 | P-33 | Cl-36 | K-40 | Fe-59 | Co-57 | Se-75 | Rb-84 |
| Sr-85 | Sr-89 | Y-91 | Zr-95 | Nb-93m | Nb-95 | Tc-97m | Ru-103 |
| Ag-105 | In-114m | Sn-113 | Sn-119m | Sn-121m | Sn-123 | Te-123m | Te-125m |
| Te-127m | Te-129m | I-125 | La-137 | Ce-139 | Pm-143 | Pm-145 | Pm-147 |
| Sm-145 | Sm-151 | Eu-149 | Eu-155 | Gd-151 | Gd-153 | Dy-159 | Tm-170 |
| Yb-169 | Lu-173 | Lu-174 | Lu-174m | Hf-175 | Hf-181 | Ta-179 | Re-184 |
| Re-186m | Ir-192 | Pt-193 | Au-195 | Hg-203 | Pb-205 | Np-235 | Pu-237 |

**Less than 300 nCi ($1 \times 10^4$ Bq)**

| | | | | | | | |
|---|---|---|---|---|---|---|---|
| Be-10 | Na-22 | Al-26 | Si-32 | Sc-46 | Ti-44 | Mn-54 | Fe-60 |
| Co-56 | Co-58 | Co-60 | Zn-65 | Ge-68 | Rb-83 | Y-88 | Zr-88 |
| Zr-93 | Nb-94 | Mo-93 | Tc-95m | Tc-97 | Tc-98 | Ru-106 | Rh-101 |
| Rh-102 | Rh-102m | Ag-108m | Ag-110m | Cd-109 | Sn-126 | Sb-124 | Sb-125 |
| Te-121m | I-129 | Cs-134 | Cs-137 | Ba-133 | Ce-144 | Pm-144 | Pm-146 |
| Pm-148m | Eu-148 | Eu-150 | Eu-152 | Eu-154 | Gd-146 | Tb-158 | Tb-160 |
| Ho-166m | Lu-176 | Lu-177, | Hf-172 | Ta-182 | Re-184m | Os-185 | Os-194 |
| Ir-192m | Ir-194m | Hg-194 | Pb-202 | Bi-207 | Bi-210m | Cm-241 | |

**Less than 30 nCi ($1 \times 10^3$ Bq)**

| | | | | | | | |
|---|---|---|---|---|---|---|---|
| Sr-90 | Cd-113m | La-138 | Hf-178m | Hf-182 | Po-210 | Ra-226 | Ra-228 |
| Pu-241 | Bk-249 | Es-254 | | | | | |

**Less than 3 nCi ($1 \times 10^2$ Bq)**

| | | | | | | | |
|---|---|---|---|---|---|---|---|
| Sm-146 | Sm-147 | Pb-210 | Np-236 | Cm-242 | Cf-248 | Fm-257 | Md-258 |

**Less than .3 nCi ($1 \times 10^1$ Bq)**

| | | | | | | | |
|---|---|---|---|---|---|---|---|
| Gd-148 | Th-228 | Th-230 | U-232 | U-233 | U-234 | U-235 | U-236 |
| U-238 | Np-237 | Pu-236 | Pu-238 | Pu-239 | Pu-240 | Pu-242 | Pu-244 |
| Am-241 | Am-242m | Am-243 | Cm-243 | Cm-244 | Cm-245 | Cm-246 | Cm-247 |
| | Bk-247 | Cf-249 | Cf-250 | Cf-251 | Cf-252 | Cf-254 | |

**Less than 30 pCi (1 Bq)**

| | | | | | |
|---|---|---|---|---|---|
| Ac-227 | Th-229 | Th-232 | Pa-231 | Cm-248 | Cm-250 |

TABLE 1.

Values for exemption of sealed sources from inventory*

| | | | | | | | |
|---|---|---|---|---|---|---|---|
| Less than 300 $\mu$Ci (1 x $10^7$ Bq) | | | | | | | |
| H-3 | Be-7 | C-14 | S-35 | Ca-41 | Ca-45 | V-49 | Mn-53 |
| Fe-55 | Ni-59 | Ni-63 | As-73 | Se-79 | Rb-87 | Tc-99 | Pd-107 |
| Cd-113 | In-115 | Te-123 | Cs-135 | Ce-141 | Gd-152 | Tb-157 | Tm-171 |
| Ta-180 | W-181 | W-185 | W-188 | Re-187 | Tl-204 | | |
| Less than 30 $\mu$Ci (1 x $10^6$ Bq) | | | | | | | |
| Cl-36 | K-40 | Fe-59 | Co-57 | Se-75 | Rb-84 | Sr-85 | Sr-89 |
| Y-91 | Zr-95 | Nb-93m | Nb-95 | Tc-97m | Ru-103 | Ag-105 | In-114m |
| Sn-113 | Sn-119m | Sn-121m | Sn-123 | Te-123m | Te-125m | Te-127m | Te-129m |
| I-125 | La-137 | Ce-139 | Pm-143 | Pm-145 | Pm-147 | Sm-145 | Sm-151 |
| Eu-149 | Eu-155 | Gd-151 | Gd-153 | Dy-159 | Tm-170 | Yb-169 | Lu-173 |
| Lu-174 | Lu-174m | Hf-175 | Hf-181 | Ta-179 | Re-184 | Re-186m | Ir-192 |
| Pt-193 | Au-195 | Hg-203 | Pb-205 | Np-235 | Pu-237 | | |
| Less than 3 $\mu$Ci (1 x $10^5$ Bq) | | | | | | | |
| Be-10 | Na-22 | Al-26 | Si-32 | Sc-46 | Ti-44 | Mn-54 | Fe-60 |
| Co-56 | Co-58 | Co-60 | Zn-65 | Ge-68 | Rb-83 | Y-88 | Zr-88 |
| Zr-93 | Nb-94 | Mo-93 | Tc-95m | Tc-97 | Tc-98 | Ru-106 | Rh-101 |
| Rh-102 | Rh-102m | Ag-108m | Ag-110m | Cd-109 | Sn-126 | Sb-124 | Sb-125 |
| Te-121m | I-129 | Cs-134 | Cs-137 | Ba-133 | Ce-144 | Pm-144 | Pm-146 |
| Pm-148m | Eu-148 | Eu-150 | Eu-152 | Eu-154 | Gd-146 | Tb-158 | Tb-160 |
| Ho-166m | Lu-176 | Lu-177m | Hf-172 | Ta-182 | Re-184m | Os-185 | Os-194 |
| Ir-192m | Ir-194m | Hg-194 | Pb-202 | Bi-207 | Bi-210m | Cm-241 | |
| Less than 0.3 $\mu$Ci (1 x $10^4$ Bq) | | | | | | | |
| Sr-90 | Cd-113m | La-138 | Hf-178m | Hf-182 | Po-210 | Ra-226 | Ra-228 |
| Pu-241 | Bk-249 | Es-254 | | | | | |
| Less than 0.03 $\mu$Ci (1 x $10^3$ Bq) | | | | | | | |
| Sm-146 | Sm-147 | Pb-210 | Np-236 | Cm-242 | Cf-248 | Fm-257 | Md-258 |
| Less than 0.003 $\mu$Ci (1 x $10^2$ Bq) | | | | | | | |
| Gd-148 | Th-228 | Th-230 | U-232 | U-233 | U-234 | U-235 | U-236 |
| U-238 | Np-237 | Pu-236 | Pu-238 | Pu-239 | Pu-240 | Pu-242 | Pu-244 |
| Am-241 | Am-242m | Am-243 | Cm-243 | Cm-244 | Cm-245 | Cm-246 | Cm-247 |
| | Bk-247 | Cf-249 | Cf-250 | Cf-251 | Cf-252 | Cf-254 | |
| Less than 0.0003 $\mu$Ci (1 x $10^1$ Bq) | | | | | | | |
| Ac-227 | Th-229 | Th-232 | Pa-231 | Cm-248 | Cm-250 | | |

* These activities were selected to yield a committed effective dose equivalent of 10 mrem (100 µSv) or less for a credible incident to a member of the general public.

Table 11.1.1 Classification of Workplaces (Continued)
(From International Labor Office *Guidelines for the Radiation Protection of Workers in Industry (Ionizing Radiations)* Occupational Safety and Health Series 62 ©International Labour Organization 1989)

*Type II Workplace*

1. A type II (type B) workplace should be specifically designed, constructed and equipped for work with radioisotopes.
2. The levels of airborne activity should be kept as low as reasonably achievable by the use of totally or partially ventilated fume hoods or glove boxes.
3. The workplace should have reduced air pressure relative to the surrounding areas. The ventilation exhaust should be via a fume hood. There should be a space for an absolute filter to be put between the fume hood and the ventilation duct allowing for easy change of the filter and for monitoring the negative pressure gradient. Special attention should be given to avoiding the recirculation of air and the dispersion of contamination to other occupied areas.
4. The surfaces of the fume hood and the ventilation duct should be smooth and made of non–absorbent material that can withstand the chemicals normally used in the hood.
5. The speed of the air flow should be regular, without eddies, and should be such that there can be no escape of air from the fume hood into the workplace under typical operating conditions, including the opening of windows and doors and the suction of other fume hoods. This should be checked using smoke tests. The gas, water and electrical outputs should be operated from outside the hood.
6. Fume hoods and glove boxes where "active" work is carried out should be properly marked with the radiation symbol and the appropriate explanatory text.
7. A waste bin with a foot–operated lid should be available for the collection of low activity waste. The bin should bear the radiation warning sign. A plastic bottle which could withstand the effects of the various solvents and the effects of radiation should be provided for the temporary retention of liquid waste.
8. Facilities for washing hands should be foot or elbow operated.
9. A special room should be provided for storing radioactive substances.

*Type III Workplace*

1. A type III (type A) workplace should be specifically designed, constructed and equipped for handling large quantities of radioactive material in accordance with the specifications and requirements laid down by the competent authority.
2. Processes involving risks of air contamination should be carried out in completely enclosed glove boxes or hot cells under negative pressure and provided with filters and transfer boxes.
3. Radioactive substances should be stored only in a special room equipped with suitable shielding and ventilation, and in accordance with the provisions as regards waste storage.

## Table 11.1.1.1 Toxicity Classification of Radionuclides[a]

(From International Labor Office *Guidelines for the Radiation Protection of Workers in Industry (Ionizing Radiations)* Occupational Safety and Health Series 62 ©International Labour Organization 1989)

*Very High Radiotoxicity (Group 1)*

| | | | | | | | | | |
|---|---|---|---|---|---|---|---|---|---|
| $^{210}Pb$ | $^{228}Ra$ | $^{229}Th$ | $^{232}U$ | $^{236}Pu$ | $^{241}Pu$ | $^{243}Am$ | $^{244}Cm$ | $^{248}Cm$ | $^{251}Cf$ |
| $^{210}Po$ | $^{227}Ac$ | $^{230}Th$ | $^{233}U$ | $^{238}Pu$ | $^{242}Pu$ | $^{240}Cm$ | $^{245}Cm$ | $^{248}Cf$ | $^{252}Cf$ |
| $^{223}Ra$ | $^{227}Th$ | $^{231}Pa$ | $^{234}U$ | $^{239}Pu$ | $^{241}Am$ | $^{242}Cm$ | $^{246}Cm$ | $^{249}Cf$ | $^{254}Cf$ |
| $^{225}Ra$ | $^{228}Th$ | $^{230}U$ | $^{237}Np$ | $^{240}Pu$ | $^{242m}Am$ | $^{243}Cm$ | $^{247}Cm$ | $^{250}Cf$ | $^{254}Es$ |
| $^{226}Ra$ | | | | | | | | | |

*High Radiotoxicity (Group 2)*

| | | | | | | | | | |
|---|---|---|---|---|---|---|---|---|---|
| $^{22}Na$ | $^{90}Sr$ | $^{110m}Ag$ | $^{124}I$ | $^{140}Ba$ | $^{170}Tm$ | $^{212}Pb$ | $^{228}Ac$ | $^{244}Pu$ | $^{253}Cf$ |
| $^{36}Cl$ | $^{91}Y$ | $^{115m}Cd$ | $^{125}I$ | $^{144}Ce$ | $^{181}Hf$ | $^{207}Bi$ | $^{232}Th$ | $^{242}Am$ | $^{253}Es$ |
| $^{45}Ca$ | $^{93}Zr$ | $^{114m}In$ | $^{126}I$ | $^{152}Eu$ | $^{182}Ta$ | $^{210}Bi$ | Th Nat[b] | $^{241}Cm$ | $^{254m}Es$ |
| $^{46}Sc$ | $^{94}Nb$ | $^{124}Sb$ | $^{131}I$ | $^{154}Eu$ | $^{192}Ir$ | $^{211}At$ | $^{230}Pa$ | $^{249}Bk$ | $^{255}Fm$ |
| $^{60}Co$ | $^{106}Ru$ | $^{125}Sb$ | $^{134}Cs$ | $^{160}Tb$ | $^{204}Tl$ | $^{224}Ra$ | $^{236}U$ | $^{246}Cf$ | $^{256}Fm$ |

*Moderate Radiotoxicity (Group 3)*

| | | | | | | | | | |
|---|---|---|---|---|---|---|---|---|---|
| $^{7}Be$ | $^{52}Fe$ | $^{82}Br$ | $^{97}Zr$ | $^{105}Ag$ | $^{134}Te$ | $^{143}Ce$ | $^{171}Tm$ | $^{198}Au$ | $^{237}U$ |
| $^{14}C$ | $^{55}Fe$ | $^{74}Kr$ | $^{90}Nb$ | $^{111}Ag$ | $^{120}I$ | $^{142}Pr$ | $^{175}Yb$ | $^{199}Au$ | $^{240}U$ |
| $^{18}F$ | $^{59}Fe$ | $^{77}Kr$ | $^{93m}Nb$ | $^{109}Cd$ | $^{123}I$ | $^{143}Pr$ | $^{177}Lu$ | $^{197}Hg$ | $^{240}Np$ |
| $^{24}Na$ | $^{55}Co$ | $^{87}Kr$ | $^{95}Nb$ | $^{115}Cd$ | $^{130}I$ | $^{147}Nd$ | $^{181}W$ | $^{197m}Hg$ | $^{239}Np$ |
| $^{31}Si$ | $^{56}Co$ | $^{88}Kr$ | $^{96}Nb$ | $^{115m}In$ | $^{132m}I$ | $^{149}Nd$ | $^{185}W$ | $^{203}Hg$ | $^{234}Pu$ |
| $^{32}P$ | $^{57}Co$ | $^{86}Rb$ | $^{90}Mo$ | $^{113}Sn$ | $^{133}I$ | $^{147}Pm$ | $^{187}W$ | $^{200}Tl$ | $^{237}Pu$ |
| $^{33}P$ | $^{58}Co$ | $^{83}Sr$ | $^{93}Mo$ | $^{125}Sn$ | $^{135}I$ | $^{149}Pm$ | $^{183}Re$ | $^{201}Tl$ | $^{245}Pu$ |
| $^{35}S$ | $^{63}Ni$ | $^{85}Sr$ | $^{99}Mo$ | $^{122}Sb$ | $^{135}Xe$ | $^{151}Sm$ | $^{186}Re$ | $^{202}Tl$ | $^{238}Am$ |
| $^{38}Cl$ | $^{65}Ni$ | $^{89}Sr$ | $^{96}Tc$ | $^{121}Te$ | $^{132}Cs$ | $^{153}Sm$ | $^{188}Re$ | $^{203}Pb$ | $^{240}Am$ |
| $^{41}Ar$ | $^{65}Cu$ | $^{91}Sr$ | $^{97m}Tc$ | $^{121m}Te$ | $^{136}Cs$ | $^{152m}Eu$ | $^{185}Os$ | $^{206}Bi$ | $^{244m}Am$ |
| $^{42}K$ | $^{65}Zn$ | $^{92}Sr$ | $^{97}Tc$ | $^{123m}Te$ | $^{137}Cs$ | $^{155}Eu$ | $^{191}Os$ | $^{212}Bi$ | $^{244}Am$ |
| $^{43}K$ | $^{69m}Zn$ | $^{90}Y$ | $^{99}Tc$ | $^{125m}Te$ | $^{131}Ba$ | $^{153}Gd$ | $^{193}Os$ | $^{220}Rn$ | $^{238}Cm$ |
| $^{47}Ca$ | $^{72}Ga$ | $^{92}Y$ | $^{97}Ru$ | $^{127m}Te$ | $^{140}La$ | $^{159}Gd$ | $^{190}Ir$ | $^{222}Rn$ | $^{250}Bk$ |
| $^{47}Sc$ | $^{73}As$ | $^{93}Y$ | $^{103}Ru$ | $^{129m}Te$ | $^{134}Ce$ | $^{165}Dy$ | $^{194}Ir$ | $^{226}Th$ | $^{244}Cf$ |
| $^{48}Sc$ | $^{74}As$ | $^{86}Zr$ | $^{105}Ru$ | $^{131}Te$ | $^{135}Ce$ | $^{166}Dy$ | $^{191}Pt$ | $^{231}Th$ | $^{254}Fm$ |
| $^{48}V$ | $^{76}As$ | $^{88}Zr$ | $^{105}Rh$ | $^{131m}Te$ | $^{137m}Ce$ | $^{166}Ho$ | $^{193}Pt$ | $^{234}Th$ | |
| $^{51}Cr$ | $^{77}As$ | $^{89}Zr$ | $^{103}Pd$ | $^{132}Te$ | $^{139}Ce$ | $^{169}Er$ | $^{197}Pt$ | $^{233}Pa$ | |
| $^{52}Mn$ | $^{75}Se$ | $^{95}Zr$ | $^{109}Pd$ | $^{133m}Te$ | $^{141}Ce$ | $^{171}Er$ | $^{196}Au$ | $^{231}U$ | |
| $^{54}Mn$ | | | | | | | | | |

*Low Radiotoxicity (Group 4)*

| | | | | | | | | | |
|---|---|---|---|---|---|---|---|---|---|
| $^{3}H$ | $^{60m}Co$ | $^{81}Kr$ | $^{91m}Y$ | $^{99m}Tc$ | $^{120m}I$ | $^{127}Cs$ | $^{138}Cs$ | $^{207}Po$ | $^{243}Pu$ |
| $^{15}O$ | $^{61}Co$ | $^{83m}Kr$ | $^{88}Nb$ | $^{103m}Rh$ | $^{121}I$ | $^{129}Cs$ | $^{137}Ce$ | $^{227}Ra$ | $^{237}Am$ |
| $^{37}Ar$ | $^{62m}Co$ | $^{85m}Kr$ | $^{89}Nb$ | $^{113m}In$ | $^{128}I$ | $^{130}Cs$ | $^{191m}Os$ | $^{235}U$ | $^{239}Am$ |
| $^{51}Mn$ | $^{59}Ni$ | $^{85}Kr$ | $^{97}Nb$ | $^{116}Te$ | $^{129}I$ | $^{131}Cs$ | $^{193m}Pt$ | $^{238}U$ | $^{245}Am$ |
| $^{52m}Mn$ | $^{69}Zn$ | $^{80}Sr$ | $^{98}Nb$ | $^{123}Te$ | $^{134}I$ | $^{134m}Cs$ | $^{197m}Pt$ | $^{239}U$ | $^{246m}Am$ |
| $^{53}Mn$ | $^{71}Ge$ | $^{81}Sr$ | $^{93m}Mo$ | $^{127}Te$ | $^{131m}Xe$ | $^{135}Cs$ | $^{203}Po$ | U NAT | $^{246}Am$ |
| $^{56}Mn$ | $^{76}Kr$ | $^{85m}Sr$ | $^{101}Mo$ | $^{129}Te$ | $^{133}Xe$ | $^{135m}Cs$ | $^{205}Po$ | $^{350}Pu$ | $^{249}Cm$ |
| $^{56m}Co$ | $^{79}Kr$ | $^{87m}Sr$ | $^{96m}Tc$ | $^{133}Te$ | $^{125}Cs$ | | | | |

[a] Based on the classification published in the *Official Journal of the European Communities*, No. L246, Vol. 23; Luxembourg; 17 Sep. 1980.

[b] One becquerel of natural thorium corresponds to 1 alpha disintegration per second (dps) (0.5 dps of $^{232}Th$ and 0.5 dps of $^{228}Th$). One curie of natural thorium corresponds to $3.7 \times 10^{10}$ alpha disintegrations per second ($1.85 \times 10^{10}$ dps of $^{232}Th$ and $1.85 \times 10^{10}$ dps of $^{228}Th$).

Table 11.1.1.2 Activity Limits for Use of Radionuclides in Various Types of Workplace[a]
(From International Labor Office *Guidelines for the Radiation Protection of Workers in Industry (Ionizing Radiations)* Occupational Safety and Health Series 62 ©International Labour Organization 1989)

| Radionuclide Group | Type of Workplace | | |
|---|---|---|---|
| | Type I | Type II | Type II |
| 1. Very high | 500 K Bq or less <15 μCi | 500 K Bq–500 M Bq | 500 M Bq or more |
| 2. High | 5 M Bq or less <150 μCi | 5 M Bq–5 G Bq | 5 G Bq or more |
| 3. Moderate | 50 M Bq or less <1.5 mCi | 50 M Bq–50 G Bq | 50 G Bq or more |
| 4. Low | 500 M Bq or less <15 mCi | 500 M Bq–500 G Bq | 500 G Bq or more |

[a] The above table provides, as precisely as the complexity of the subject will allow, a basis for assessing the type of workplace required for normal operations. According to the nature of the operations, the following modifying factors should be applied:

| Operation | Modifying Factor |
|---|---|
| Storage (stock solutions) | x 100 |
| Very simple wet operations | x 10 |
| Normal operations | x 1 |
| Complex wet operations with risk of spills and simple dry operations | x 0.1 |
| Dry and dusty operations | x 0.01 |

## Table 11.1.1 Classification of Workplaces

(From International Labor Office *Guidelines for the Radiation Protection of Workers in Industry (Ionizing Radiations)* Occupational Safety and Health Series 62 ©International Labour Organization 1989)

*Introduction*

1. In view of the extreme diversity of processes carried out with unsealed radioactive sources and the great variety of potential risks, working areas and workshops should be classified according to the relative radiotoxicity of the radionuclides taking into account the nature of the operations and the total amount used.

2. Specialized installations should be divided into three types of workplace depending, to the extent practicable, on the factors referred to in paragraph 1 and in accordance with Table 11.1.1.1 for radiotoxicity classification. The types of workplace are commonly referred to as:

   (a) type I workplace or type C workplace;
   (b) type II workplace or type B workplace;
   (c) type III workplace or type A workplace.

3. The activity limits for use of radionuclides in the various types of workplace are given in Table 11.1.1.2.

4. Workplaces of all three types should be:

   (a) reserved exclusively for work with radioactive substances and isolated from other workplaces as far as is practicable;

   (b) subject to classification according to the potential risks involved: normally areas where radioactive substances are used will be classified as controlled areas; however, areas where workers are not likely to receive more than three tenths of the dose limits may be either included in a controlled area or defined as supervised areas, if this is duly justified and considered more convenient.

5. A changing area should be provided at the entrances of areas where radioactive substances are prepared or used, in order to prevent contamination from being transported by persons to outside areas. The changing area should contain a foot barrier. Places for clean clothes should be left outside the barrier and protective clothing, equipment and containers for discarded, contaminated clothing should be provided on the active side of the barrier.

6. Washing facilities should be set up appropriate to the level of radioactivity present in the workplace. The wash basins should be elbow, knee or foot operated.

7. Changing areas should contain monitoring and control equipment, appropriate to the levels of radioactive materials present, to monitor the hands, feet, shoes and clothes of workers leaving controlled or supervised areas. Additional check points should be established within controlled areas when necessary, depending on the type of work being carried out.

8. Separate rooms should be assigned to different types of work when such work involves widely varying levels of activity, and in accordance with the classification of workplaces as given in this chapter. Counting apparatus should normally be placed in a separate room. The design should take into account, as far as practicable, the transfer of radioactive materials from one workplace to another, where necessary, without passing through the surrounding area.

*Type I Workplace*

1. The design, construction and equipment of a type I (type C) workplace should be similar to those of a good quality modern chemical laboratory.

2. Normal ventilation is usually sufficient, and could be complemented with continuous movement of air into a fume hood.

### Atomic Electrons ($^{99}$Mo) (continued)

| $e_{bin}$(keV) | ⟨e⟩(keV) | e(%) |
|---|---|---|
| 775 - 823 | 0.0051 | 0.00065 *23* |
| 940 - 986 | 0.00069 | 7 *3* ×10$^{-5}$ |
| 998 - 1035 | 8.0 ×10$^{-6}$ | 8 *3* ×10$^{-7}$ |
| 1053 - 1056 | 7.0 ×10$^{-7}$ | 7 *3* ×10$^{-8}$ |

### Continuous Radiation ($^{99}$Mo)

⟨β-⟩=390 keV;⟨IB⟩=0.47 keV

| $E_{bin}$(keV) | | ⟨ ⟩(keV) | (%) |
|---|---|---|---|
| 0 - 10 | β- | 0.078 | 1.55 |
| | IB | 0.018 | |
| 10 - 20 | β- | 0.233 | 1.56 |
| | IB | 0.017 | 0.119 |
| 20 - 40 | β- | 0.94 | 3.12 |
| | IB | 0.032 | 0.113 |
| 40 - 100 | β- | 6.6 | 9.4 |
| | IB | 0.084 | 0.13 |
| 100 - 300 | β- | 57 | 28.8 |
| | IB | 0.18 | 0.105 |
| 300 - 600 | β- | 141 | 31.9 |
| | IB | 0.112 | 0.028 |
| 600 - 1214 | β- | 184 | 23.8 |
| | IB | 0.027 | 0.0038 |

## $^{99}_{43}$Tc(2.13 *5* ×10$^{5}$ yr)

Mode: β-

Δ: -87324.4 *21* keV

SpA: 0.0170 Ci/g

Prod: fission; daughter $^{99}$Mo

### Photons ($^{99}$Tc)

| $\gamma_{mode}$ | γ(keV) | γ(%) |
|---|---|---|
| γ E2+29%M1 | 89.65 *18* | 4.9 *17* ×10$^{-6}$ |

### Continuous Radiation ($^{99}$Tc)

⟨β-⟩=85 keV;⟨IB⟩=0.026 keV

| $E_{bin}$(keV) | | ⟨ ⟩(keV) | (%) |
|---|---|---|---|
| 0 - 10 | β- | 0.385 | 7.7 |
| | IB | 0.0044 | |
| 10 - 20 | β- | 1.11 | 7.5 |
| | IB | 0.0037 | 0.026 |
| 20 - 40 | β- | 4.19 | 14.0 |
| | IB | 0.0057 | 0.020 |
| 40 - 100 | β- | 23.6 | 34.6 |
| | IB | 0.0088 | 0.0146 |
| 100 - 294 | β- | 55 | 36.2 |
| | IB | 0.0031 | 0.0024 |

## $^{99}_{43}$Tc(6.006 *2* h)

~0.3% $t_{1/2}$ variation with chemical environment

Mode: IT(99.9963 *6* %), β-(0.0037 *6* %)

Δ: -87181.8 *21* keV

SpA: 5.2704×10$^{6}$ Ci/g

Prod: daughter $^{99}$Mo

### Photons ($^{99}$Tc)

⟨γ⟩=123.9 *7* keV

| $\gamma_{mode}$ | γ(keV) | γ(%)† |
|---|---|---|
| Tc $L_\ell$ | 2.133 | 0.0096 *17* |
| Tc $L_\eta$ | 2.249 | 0.0045 *7* |
| Tc $L_\alpha$ | 2.424 | 0.24 *4* |
| Tc $L_\beta$ | 2.576 | 0.145 *24* |
| Tc $L_\gamma$ | 2.860 | 0.0103 *19* |
| Tc $K_{\alpha2}$ | 18.251 | 2.17 *8* |
| Tc $K_{\alpha1}$ | 18.367 | 4.12 *16* |
| Tc $K_{\beta1}$' | 20.613 | 0.98 *4* |
| Tc $K_{\beta2}$' | 21.136 | 0.177 *7* |
| $\gamma_{IT}$ M1+1.4%E2 | 140.474 *11* | 87.2 |
| $\gamma_{IT}$ M4 | 142.658 *11* | 0.028 *6* |
| $\gamma_\beta$ E2+M1 | 232.71 *23* | 8.8 *13* ×10$^{-6}$ |
| $\gamma_\beta$ M1+E2 | 322.36 *21* | 9.8 *7* ×10$^{-5}$ |

† uncert(syst): 0.57% for IT, 16% for β-

### Atomic Electrons ($^{99}$Tc)*

⟨e⟩=14.2 *3* keV

| $e_{bin}$(keV) | ⟨e⟩(keV) | e(%) |
|---|---|---|
| 3 | 0.218 | 7.9 *8* |
| 15 | 0.091 | 0.60 *6* |
| 16 | 0.138 | 0.89 *9* |
| 17 | 0.0085 | 0.049 *5* |
| 18 | 0.091 | 0.51 *5* |
| 20 | 0.0077 | 0.038 *4* |
| 21 | 0.00150 | 0.0073 *8* |
| 119 | 10.38 | 8.69 *18* |
| 122 | 1.00 | 0.82 *18* |
| 137 | 1.33 | 0.965 *20* |
| 138 | 0.126 | 0.091 *3* |
| 140 | 0.69 | 0.49 *6* |
| 142 | 0.074 | 0.052 *11* |
| 143 | 0.013 | 0.0092 *20* |

* with IT

## $^{99}_{44}$Ru(stable)

Δ: -87618.0 *22* keV

%: 12.7 *1*

## $^{99}_{45}$Rh(16 *1* d)

Mode: ε

Δ: -85519 *10* keV

SpA: 8.2×10$^{4}$ Ci/g

Prod: $^{99}$Ru(p,n); protons on Cd

### Photons ($^{99}$Rh)

⟨γ⟩=528 *26* keV

| $\gamma_{mode}$ | γ(keV) | γ(%)† |
|---|---|---|
| Ru $L_\ell$ | 2.253 | 0.125 *24* |
| Ru $L_\eta$ | 2.382 | 0.059 *10* |
| Ru $L_\alpha$ | 2.558 | 3.2 *6* |
| Ru $L_\beta$ | 2.731 | 2.0 *4* |
| Ru $L_\gamma$ | 3.029 | 0.15 *3* |
| Ru $K_{\alpha2}$ | 19.150 | 27.4 *22* |
| Ru $K_{\alpha1}$ | 19.279 | 52 *4* |
| Ru $K_{\beta1}$' | 21.650 | 12.6 *10* |
| Ru $K_{\beta2}$' | 22.210 | 2.34 *10* |

### Photons ($^{99}$Rh) (continued)

| $\gamma_{mode}$ | γ(keV) | γ(%)† |
|---|---|---|
| γ | 175.4 *3* | 2.3 *5* |
| γ E2+M1 | 232.71 *23* | 0.59 *15* |
| γ | 253.2 *3* | 0.39 *6* |
| γ (E2) | 295.92 *25* | 0.84 *17* |
| γ M1+E2 | 322.36 *21* | 6.6 *13* |
| γ M1+E2 | 353.26 *25* | 33 *7* |
| γ | 442.91 *23* | 1.7 *3* |
| γ | 485.89 *25* | 0.51 *6* |
| γ | 528.63 *25* | 40 |
| γ | 575.54 *23* | 0.27 *4* |
| γ | 618.28 *22* | 4.0 *8* |
| γ | 734.7 *4* | 0.32 *6* |
| γ | 764.4 *3* | 0.40 *8* |
| γ | 807.9 *3* | 1.4 *3* |
| γ | 850.8 *3* | 0.24 *5* |
| γ | 897.5 *3* | 0.68 *14* |
| γ | 940.2 *4* | 1.5 *3* |
| γ | 1000.7 *4* | 0.68 *14* |
| γ | 1062.0 *5* | 0.16 *3* |
| γ | 1089.7 *4* | 0.32 *6* |
| γ | 1208.8 *4* | 0.16 *3* |
| γ | 1292.4 *7* | 0.36 *7* |
| γ | 1324.9 *4* | 0.16 *3* |
| γ | 1383.1 *4* | 0.16 *3* |
| γ | 1442.9 *4* | 0.080 *16* |
| γ | 1484.0 *4* | 0.16 *3* |
| γ | 1504.9 *5* | 0.080 *16* |
| γ | 1532.6 *4* | 0.56 *11* |
| γ | 1572.3 *4* | 0.23 *5* |
| γ | 1616.6 *4* | 0.24 *5* |
| γ | 1662.0 *4* | 0.060 *12* |
| γ | 1749.4 *7* | 0.060 *12* |
| γ | 1969.9 *4* | 0.16 *3* |
| γ | 2059.5 *3* | 0.032 *6* |

† 2.5% uncert(syst)

### Atomic Electrons ($^{99}$Rh)

⟨e⟩=43 *5* keV

| $e_{bin}$(keV) | ⟨e⟩(keV) | e(%) |
|---|---|---|
| 3 | 2.9 | 100 *13* |
| 16 | 2.8 | 17.2 *22* |
| 18 - 22 | 1.35 | 7.1 *7* |
| 68 | 24.0 | 36 *7* |
| 86 | 2.8 | 3.3 *7* |
| 87 | 4.2 | ~ 4.9 *10* |
| 89 | 1.4 | 1.5 *3* |
| 153 - 175 | 0.37 | ~0.23 |
| 210 - 253 | 0.13 | 0.060 *21* |
| 274 - 322 | 0.42 | 0.14 *3* |
| 331 - 353 | 1.5 | 0.44 *10* |
| 421 - 464 | 0.044 | 0.010 *4* |
| 483 - 529 | 0.6 | 0.12 *5* |
| 553 - 596 | 0.045 | 0.008 *4* |
| 615 - 618 | 0.006 | 0.0010 *5* |
| 713 - 762 | 0.0066 | 0.0009 *3* |
| 764 - 808 | 0.012 | 0.0015 *7* |
| 829 - 875 | 0.0064 | 0.0007 *3* |
| 894 - 940 | 0.011 | 0.0012 *5* |
| 979 - 1001 | 0.0045 | 0.00046 *19* |
| 1040 - 1089 | 0.0029 | 0.00028 *9* |
| 1187 - 1209 | 0.0009 | 7 *3* ×10$^{-5}$ |
| 1270 - 1303 | 0.0025 | 0.00020 *6* |
| 1322 - 1361 | 0.0008 | 5.7 *22* ×10$^{-5}$ |
| 1380 - 1421 | 0.00042 | 2.9 *10* ×10$^{-5}$ |
| 1440 - 1532 | 0.0035 | 0.00024 *6* |
| 1550 - 1640 | 0.0022 | 0.00014 *3* |
| 1659 - 1749 | 0.00026 | 1.5 *5* ×10$^{-5}$ |
| 1948 - 2037 | 0.00065 | 3.3 *10* ×10$^{-5}$ |
| 2056 - 2059 | 1.3 ×10$^{-5}$ | 6.2 *30* ×10$^{-7}$ |

## $^{232}_{89}$Ac(35 5 s)

Mode: $\beta$-
Δ: 39240 200 keV syst
SpA: $1.38\times10^{9}$ Ci/g
Prod: $^{232}$Th(n,p)

## $^{232}_{90}$Th(1.405 6 $\times10^{10}$ yr)

Mode: $\alpha$
Δ: 35444.4 21 keV
SpA: Ci/g
Prod: natural source
%: 100

### Alpha Particles ($^{232}$Th)

⟨$\alpha$⟩=4005 6 keV

| $\alpha$(keV) | $\alpha$(%) |
|---|---|
| 3830 10 | 0.20 8 |
| 3952 5 | 23 3 |
| 4010 5 | 77 3 |

### Photons ($^{232}$Th)

⟨$\gamma$⟩=0.17 4 keV

| $\gamma_{mode}$ | $\gamma$(keV) | $\gamma$(%) |
|---|---|---|
| $\gamma$E2 | 59.0 10 | 0.190 25 |
| $\gamma$(E2) | 124 11 | ~0.043 |

## $^{232}_{91}$Pa(1.31 2 d)

Mode: $\beta$-(~ 99.98 %), $\epsilon$(~ 0.2 %)
Δ: 35923 11 keV
SpA: $4.30\times10^{5}$ Ci/g
Prod: $^{231}$Pa(n,$\gamma$); $^{232}$Th(d,2n); $^{232}$Th(p,n)

### Photons ($^{232}$Pa)

⟨$\gamma$⟩=941 20 keV

| $\gamma_{mode}$ | $\gamma$(keV) | $\gamma$(%)† |
|---|---|---|
| U $L_\eta$ | 11.620 | 1.15 21 |
| U $L_\alpha$ | 13.600 | 19 3 |
| U $L_\eta$ | 15.400 | 0.48 8 |
| U $L_\beta$ | 17.130 | 24 4 |
| U $L_\gamma$ | 20.295 | 5.4 10 |
| $\gamma_\beta$E2 | 47.579 9 | 0.21 4 |
| $\gamma_\beta$[E1] | 80.24 7 | 0.15 3 |
| U $K_{\alpha2}$ | 94.651 | 1.10 4 |
| U $K_{\alpha1}$ | 98.434 | 1.76 7 |
| $\gamma_\beta$[E1] | 105.48 3 | 1.65 19 |
| $\gamma_\beta$E2 | 109.001 8 | 2.8 3 |
| U $K_{\beta1}'$ | 111.025 | 0.644 24 |
| U $K_{\beta2}'$ | 114.866 | 0.217 9 |
| $\gamma_\beta$M1,E2 | 132.24 7 | 0.013 5 |
| $\gamma_\beta$[E1] | 139.53 3 | 0.58 5 |

### Photons ($^{232}$Pa) (continued)

| $\gamma_{mode}$ | $\gamma$(keV) | $\gamma$(%)† |
|---|---|---|
| $\gamma_\beta$E1 | 150.096 3 | 10.8 5 |
| $\gamma_\beta$E2 | 164.7 5 | 0.029 5 |
| $\gamma_\beta$[E2] | 175.57 24 | 0.0097 19 |
| $\gamma_\beta$M1,E2 | 176.85 7 | ~0.0039 |
| $\gamma_\beta$[E1] | 184.142 6 | 1.3 3 |
| $\gamma_\beta$[E1] | 282.33 7 | ~0.010 |
| $\gamma_\beta$E2+4.7%M1 | 387.919 4 | 7.0 3 |
| $\gamma_\beta$E2+21%M1 | 421.965 5 | 2.52 19 |
| $\gamma_\beta$E2+12%M1 | 453.693 5 | 8.61 19 |
| $\gamma_\beta$E1 | 472.426 5 | 4.16 19 |
| $\gamma_\beta$E1 | 515.653 6 | 5.53 19 |
| $\gamma_\beta$E1 | 563.231 7 | 3.66 19 |
| $\gamma_\beta$E1 | 581.427 6 | 6.0 3 |
| $\gamma_\beta$(E2) | 643.68 24 | <0.019 ? |
| $\gamma_\beta$E2 | 710.249 7 | 0.222 10 |
| $\gamma_\beta$[E2] | 734.59 7 | 0.029 6 |
| $\gamma_\beta$E2 | 754.86 3 | 0.49 3 |
| $\gamma_\beta$[M1+E2] | 814.15 7 | 0.17 4 |
| $\gamma_\beta$E2 | 819.250 6 | 7.48 14 |
| $\gamma_\beta$E2 | 863.86 3 | 2.17 14 |
| $\gamma_\beta$E2 | 866.829 8 | 5.77 18 |
| $\gamma_\beta$E1 | 894.390 7 | 19.8 4 |
| $\gamma_\beta$[M3] | 911.44 3 | 0.0116 10 ? |
| $\gamma_\beta$[E2] | 923.15 7 | 0.0403 25 |
| $\gamma_\beta$E1 | 969.345 6 | 41.6 19 |
| $\gamma_\beta$E1 | 1003.391 7 | 0.158 8 |
| $\gamma_\beta$M2 | 1016.924 8 | 0.0135 19 |
| $\gamma_\beta$ | 1050.969 10 | 0.0165 19 |
| $\gamma_\beta$E1 | 1055.2 3 | 0.068 4 |
| $\gamma_\beta$E1,E2 | 1085.28 9 | 0.0229 19 |
| $\gamma_\beta$E1 | 1125.53 16 | 0.213 10 |
| $\gamma_\beta$E1,E2 | 1132.86 9 | 0.020 3 |
| $\gamma_\beta$E1 | 1164.2 3 | 0.015 3 |
| $\gamma_\beta$[M2] | 1173.11 16 | <0.0048 |

† 0.52% uncert(syst)

### Atomic Electrons ($^{232}$Pa)

⟨e⟩=79 3 keV

| $e_{bin}$(keV) | ⟨e⟩(keV) | e(%) |
|---|---|---|
| 17 | 3.7 | 22 4 |
| 21 | 3.9 | 19 3 |
| 22 - 26 | 0.47 | 1.89 25 |
| 27 | 10.2 | 38 7 |
| 30 | 10.2 | 33 6 |
| 34 | 0.57 | 1.64 8 |
| 42 | 4.5 | 10.7 20 |
| 43 | 4.1 | 9.4 17 |
| 44 - 87 | 4.2 | 8.3 9 |
| 88 | 9.6 | 10.9 11 |
| 89 - 91 | 0.0141 | 0.0158 13 |
| 92 | 6.6 | 7.2 8 |
| 93 - 103 | 0.241 | 0.235 20 |
| 104 | 3.0 | 2.9 3 |
| 105 | 2.18 | 2.08 22 |
| 106 - 155 | 2.75 | 2.42 16 |
| 156 - 184 | 0.087 | 0.053 5 |
| 261 - 306 | 2.02 | 0.71 4 |
| 338 - 387 | 3.24 | 0.92 5 |
| 388 - 437 | 1.56 | 0.372 12 |
| 448 - 495 | 0.791 | 0.173 5 |
| 498 - 546 | 0.0532 | 0.0101 3 |
| 558 - 595 | 0.45 | 0.079 7 |
| 619 - 666 | 0.111 | 0.0170 21 |
| 670 - 717 | 0.72 | 0.102 5 |
| 729 - 755 | 0.674 | 0.090 5 |
| 779 - 819 | 0.889 | 0.1130 23 |
| 842 - 891 | 1.58 | 0.185 7 |
| 893 - 940 | 0.0260 | 0.00288 15 |
| 948 - 996 | 0.294 | 0.0309 11 |
| 998 - 1047 | 0.0090 | 0.00088 6 |
| 1049 - 1085 | 0.0022 | 0.00021 6 |
| 1104 - 1152 | 0.00195 | 0.000175 15 |
| 1156 - 1172 | 0.00012 | 10 3 $\times10^{-6}$ |

### Continuous Radiation ($^{232}$Pa)

⟨$\beta$-⟩=92 keV;⟨IB⟩=0.034 keV

| $E_{bin}$(keV) | | ⟨ ⟩(keV) | (%) |
|---|---|---|---|
| 0 - 10 | $\beta$- | 0.385 | 7.7 |
| | IB | 0.0047 | |
| 10 - 20 | $\beta$- | 1.11 | 7.4 |
| | IB | 0.0040 | 0.028 |
| 20 - 40 | $\beta$- | 4.13 | 13.8 |
| | IB | 0.0064 | 0.023 |
| 40 - 100 | $\beta$- | 23.0 | 33.7 |
| | IB | 0.0106 | 0.017 |
| 100 - 300 | $\beta$- | 58 | 36.9 |
| | IB | 0.0065 | 0.0045 |
| 300 - 600 | $\beta$- | 2.29 | 0.53 |
| | IB | 0.0018 | 0.00043 |
| 600 - 1289 | $\beta$- | 2.88 | 0.367 |
| | IB | 0.00046 | 6.4 $\times10^{-5}$ |

## $^{232}_{92}$U (68.9 10 yr)

Mode: $\alpha$, SF(9 7 $\times10^{-11}$ %)
Δ: 34586 6 keV
SpA: 22.4 Ci/g
Prod: daughter $^{232}$Pa; $^{232}$Th($\alpha$,4n)

### Alpha Particles ($^{232}$U )

⟨$\alpha$⟩=5306.5 2 keV

| $\alpha$(keV) | $\alpha$(%) |
|---|---|
| 4502.9 5 | 2.4 7 $\times10^{-5}$ |
| 4930.95 10 | 0.00021 3 |
| 4948.73 20 | 0.00017 3 |
| 4997.94 11 | 0.0029 2 |
| 5136.72 10 | 0.28 2 |
| 5263.53 8 | 31.2 4 |
| 5320.34 8 | 68.6 4 |

### Photons ($^{232}$U )

⟨$\gamma$⟩=0.24 3 keV

| $\gamma_{mode}$ | $\gamma$(keV) | $\gamma$(%) |
|---|---|---|
| $\gamma$E2 | 57.81 5 | 0.21 4 |
| $\gamma$E2 | 129.03 7 | 0.075 15 |
| $\gamma$E1 | 141.19 19 | 5.4 23 $\times10^{-5}$ |
| $\gamma$E2 | 191.29 17 | 3.4 3 $\times10^{-5}$ |
| $\gamma$E1 | 209.39 7 | 1.3 3 $\times10^{-5}$ |
| $\gamma$E1 | 270.26 8 | 0.0038 5 |
| $\gamma$E1 | 328.07 9 | 0.0034 7 |
| $\gamma$E1(+M2) | 332.48 9 | 0.00051 3 |
| $\gamma$E1 | 338.42 6 | 4.05 14 $\times10^{-5}$ |
| $\gamma$(E1) | 478.20 24 | 1.6 6 $\times10^{-6}$ |
| $\gamma$E1 | 503.7 4 | 2.0 6 $\times10^{-5}$ |
| $\gamma$(E1) | 546.36 23 | ~1 $\times10^{-6}$ |
| $\gamma$[E2] | 774.0 4 | ~8 $\times10^{-6}$ |
| $\gamma$[M1+E2] | 816.62 24 | ~2 $\times10^{-7}$ |
| $\gamma$ | 840 1 | |
| $\gamma$[E2] | 874.43 24 | 5.5 11 $\times10^{-7}$ |

## $^{232}_{93}$Np(14.7 3 min)

Mode: $\epsilon$
Δ: 37280 100 keV syst
SpA: $5.51\times10^{7}$ Ci/g
Prod: $^{235}$U(d,5n); $^{238}$U(d,8n); $^{233}$U(d,3n)

## $^{238}_{91}$Pa(2.3 *1* min)

Mode: $\beta$-

Δ: 51270 *300* keV

SpA: $3.43\times10^{8}$ Ci/g

Prod: $^{238}$U(n,p)

### Photons ($^{238}$Pa)

| $\gamma_{mode}$ | γ(keV) | γ(rel) |
|---|---|---|
| γ[M1+E2] | 40.5 *4* | |
| γ[E2] | 44.915 *13* | |
| γ[E1] | 68.1 *5* | |
| γ[E1] | 68.8 *4* | 7.0 *14* |
| γ[E2] | 103.50 *4* | 12.0 *24* |
| γ[E1] | 109.3 *4* | |
| γ[M1+E2] | 130.8 *5* | |
| γ | 142.6 *10* | |
| γ | 154.3 *10* | 3.0 *6* |
| γ[E2] | 158.80 *8* | 4.0 *8* |
| γ | 164.9 *10* | 2.0 *4* |
| γ[M1+E2] | 171.3 *5* ? | 3.0 *6* |
| γ[M1+E2] | 178.5 *5* | 11.0 *22* |
| γ | 189.4 *10* | |
| γ | 193.3 *10* | 2.0 *4* |
| γ[M1+E2] | 197.7 *4* | 9.0 *18* |
| γ | 212.9 *10* | |
| γ[M1+E2] | 217.9 *5* | 14 *3* |
| γ | 221.9 *10* | 4.0 *8* |
| γ | 228.8 *10* | |
| γ[E2] | 238.3 *4* | |
| γ[M1+E2] | 250.6 *5* | 7.0 *14* |
| γ[M1+E2] | 258.7 *4* | 8.0 *16* |
| γ[M1+E2] | 269.8 *5* | 12.0 *24* |
| γ | 276.0 *10* | |
| γ | 289.2 *5* | 4.0 *8* |
| γ | 293.0 *10* | 12.0 *24* |
| γ | 301.8 *10* | 2.0 *4* |
| γ | 316.9 *5* | 7.0 *14* |
| γ | 322.0 *10* | |
| γ | 329.5 *10* | |
| γ | 347.1 *6* | |
| γ | 353.3 *10* | |
| γ | 372.7 *5* | 6 † |
| γ | 374.8 *6* | |
| γ | 377.0 *10* | |
| γ[M1+E2] | 396.4 *4* | 18 *4* |
| γ | 407.5 *10* | 9.0 *18* |
| γ | 422.2 *10* | 6.0 *12* |
| γ[M1+E2] | 432.6 *6* ? | |
| γ[M1+E2] | 436.9 *4* | 16 *3* |
| γ | 442.9 *10* | |
| γ[M1+E2] | 448.4 *4* | 76 *15* |
| γ | 455.9 *6* ? | |
| γ | 459.6 *10* | |
| γ | 465.6 *10* | 2.0 *4* |
| γ | 476.1 *5* | 19 *4* |
| γ[E2] | 488.9 *4* | 20 *4* |
| γ | 501.9 *5* | 26 *5* |
| γ[E1] | 508.0 *6* ? | |
| γ[M1+E2] | 510.9 *6* | |
| γ[E1] | 519.2 *8* | |
| γ[M1+E2] | 547.1 *4* | 40 *8* |
| γ | 557.7 *5* | |
| γ[E1] | 569.9 *6* | 6 * |
| γ | 572.1 *10* | |
| γ[E1] | 583.5 *4* | 41 *8* |
| γ[M1+E2] | 605.7 *5* | 10 *2* |
| γ[E1] | 615.2 *5* | 8.0 *16* |
| γ | 623.6 *10* | 19 *4* |
| γ[E1] | 635.0 *4* | 88 *18* |
| γ[M1+E2] | 646.2 *5* | 9.0 *18* |
| γ | 659.8 *10* | |
| γ | 667.5 *6* ? | |
| γ[E1] | 678.0 *8* ? | |
| γ[E1] | 680.0 *4* | 73 *15* |
| γ[E1] | 687.0 *4* | 54 *11* |
| γ[E2] | 744.8 *5* | |
| γ | 749.2 *6* | |

### Photons ($^{238}$Pa) (continued)

| $\gamma_{mode}$ | γ(keV) | γ(rel) |
|---|---|---|
| γ[M1+E2] | 765.3 *4* | 4.0 *8* |
| γ | 769.0 *10* | |
| γ | 797.5 *10* | |
| γ[M1+E2] | 805.8 *4* | 44 *9* |
| γ | 818.1 *10* | |
| γ | 823.2 *5* | 9.0 *18* |
| γ | 836.7 *10* | |
| γ | 839.6 *10* | |
| γ[E1] | 849.1 *5* | 14 *3* |
| γ | 863.7 *5* | 54 *11* |
| γ[E1] | 874.6 *5* | 9.0 *18* |
| γ[E1] | 885.7 *4* | 45 *9* |
| γ[E1] | 904.9 *5* | 23 *5* |
| γ[M1+E2] | 911.1 *4* | 19 *4* |
| γ[E2] | 911.8 *5* ? | |
| γ[E1] | 930.6 *4* | 6 * |
| γ | 932.5 *5* | |
| γ[M1+E2] | 943.5 *4* | 7.0 *14* |
| γ[E1] | 952.6 *5* | 21 *4* |
| γ[M1+E2] | 957.1 *5* | 18 *4* |
| γ | 961.0 *10* | |
| γ | 967.0 *10* | 4 * |
| γ | 969.0 *10* | |
| γ | 979.6 *10* | |
| γ[M1+E2] | 984.3 *5* | 7.0 *14* |
| γ | 991.1 *10* | |
| γ[E2] | 995.5 *5* | 10 *2* |
| γ[E2] | 1003.5 *5* | |
| γ[M1+E2] | 1014.6 *4* | 100 * |
| γ[M1+E2] | 1015.3 *5* | |
| γ[M1+E2] | 1019.0 *6* | 10 * |
| γ[E1] | 1020.4 *5* | |
| γ | 1032.9 *10* | |
| γ | 1036.1 *10* | |
| γ[M1+E2] | 1042.6 *5* | 8.0 *16* |
| γ[E2] | 1060.2 *5* | 45 * |
| γ[M1+E2] | 1060.6 *5* | |
| γ | 1071.0 *10* | |
| γ | 1074.0 *10* | |
| γ[E1] | 1083.4 *5* | 50 *10* |
| γ | 1090.2 *10* | |
| γ[E2] | 1094.6 *5* | 5 *1* |
| γ | 1112.0 *10* | 2.0 *4* |
| γ | 1113.0 *10* | 4.0 *8* |
| γ[E2] | 1122.5 *6* | 5 * |
| γ[E1] | 1123.9 *5* | |
| γ | 1138.4 *6* | 2.0 *4* ? |
| γ | 1159.5 *10* | 5 * |
| γ | 1161.5 *10* | |
| γ | 1178.9 *6* | 6.0 *12* |
| γ | 1214.8 *10* | 6.0 *12* |
| γ | 1224.0 *10* | 6.0 *12* |
| γ | 1233.5 *10* | |
| γ | 1306.4 *10* | |
| γ | 1311.7 *10* | |
| γ | 1325.2 *10* | |
| γ[M1+E2] | 1332.0 *6* | 5 *1* |
| γ | 1336.7 *10* | |
| γ | 1359.3 *10* | |
| γ | 1364.0 *10* | |
| γ | 1368.8 *10* | 5 *1* |
| γ | 1376.7 *6* | 4.0 *8* |
| γ[M1+E2] | 1383.9 *6* | 7.0 *14* |
| γ | 1394.0 *10* | |
| γ | 1410.0 *10* | 3 * |
| γ | 1413.0 *4* | |
| γ | 1420.0 *10* | |
| γ | 1496.5 *5* | 8.0 *16* |
| γ | 1507.1 *10* | |
| γ | 1516.5 *4* | |
| γ[E1] | 1527.0 *3* | 4.0 *8* |
| γ | 1600.0 *5* | |
| γ | 1611.0 *10* | 3.0 *6* |
| γ | 1620.0 *10* | |
| γ[E1] | 1626.1 *4* | |
| γ[E1] | 1630.5 *3* | |
| γ | 1647.5 *10* | |
| γ[E1] | 1729.6 *4* | |
| γ | 1737.0 *10* | |
| γ | 1752.0 *10* | |
| γ[E1] | 1785.7 *4* | |
| γ | 1804.0 *10* | |

### Photons ($^{238}$Pa) (continued)

| $\gamma_{mode}$ | γ(keV) | γ(rel) |
|---|---|---|
| γ | 1841.0 *10* | |
| γ | 1872.5 *10* | |
| γ[E1] | 1889.2 *4* | 17 *3* |
| γ | 1907.0 *10* | |
| γ | 1976.0 *10* | |
| γ | 1985.5 *10* | |
| γ | 1996.7 *7* | 4.0 *8* |
| γ | 2013.0 *10* | 3.0 *6* |
| γ[E1] | 2018.9 *5* | 7.0 *14* |
| γ | 2048.0 *10* | |
| γ | 2081.0 *10* | |
| γ | 2089.0 *10* | |
| γ | 2126.0 *10* | |
| γ | 2529.0 *10* | 2.0 *4* |

* combined intensity for doublet
† 373γ + 375γ + 377γ

## $^{238}_{92}$U (4.468 *5* $\times10^{9}$ yr)

Mode: α

Δ: 47306.0 *21* keV

SpA: Ci/g

Prod: natural source

%: 99.2745 *15*

### Alpha Particles ($^{238}$U)

⟨α⟩=4194 *5*. keV

| α(keV) | α(%) |
|---|---|
| 4039 *5* | 0.23 *7* |
| 4147 *5* | 23 *4* |
| 4196 *5* | 77 *4* |

### Photons ($^{238}$U)

⟨γ⟩=1.30 *15* keV

| $\gamma_{mode}$ | γ(keV) | γ(%) |
|---|---|---|
| Th $L_\gamma$ | 11.118 | 0.18 *4* |
| Th $L_\alpha$ | 12.952 | 3.0 *6* |
| Th $L_\eta$ | 14.511 | 0.083 *17* |
| Th $L_\beta$ | 16.161 | 4.1 *8* |
| Th $L_\gamma$ | 19.094 | 0.93 *19* |
| γ E2 | 49.55 *6* | 0.070 *12* |
| γ[E2] | 110.5 | 0.024 *8* |

### Atomic Electrons ($^{238}$U)

⟨e⟩= 9.5 *7* keV

| $e_{bin}$(keV) | ⟨e⟩(keV) | e(%) |
|---|---|---|
| 16 | 0.68 | 4.2 *8* |
| 20 | 0.72 | 3.7 *7* |
| 29 | 0.082 | 0.28 *5* |
| 30 | 2.6 | 8.8 *15* |
| 33 | 2.6 | 7.7 *13* |
| 44 | 0.037 | 0.084 *14* |
| 45 | 1.04 | 2.3 *4* |
| 46 | 1.00 | 2.2 *4* |
| 48 | 0.31 | 0.65 *11* |
| 49 | 0.43 | 0.89 *15* |
| 50 | 0.026 | 0.052 *9* |

## $^{237}_{91}$Pa(8.7 *2* min)

Mode: $\beta$-
Δ: 47640 *50* keV
SpA: 9.11×10$^{7}$ Ci/g
Prod: $^{238}$U(d,2pn); $^{238}$U(γ,p); $^{238}$U(n,pn)

### Photons ($^{237}$Pa)

⟨γ⟩=604 *59* keV

| $\gamma_{mode}$ | γ(keV) | γ(%) |
|---|---|---|
| γ[M1+E2] | 44.887 *11* | |
| γ | 179.05 *14* | 0.17 *3* |
| γ[M1+E2] | 310.09 *14* | 1.73 *24* |
| γ[E1] | 498.64 *11* | 2.4 *3* |
| γ[E1] | 529.32 *14* | 14.8 *15* |
| γ[E1] | 540.71 *14* | 9.3 *9* |
| γ[E1] | 543.52 *11* | 0.24 *10* |
| γ[E1] | 554.91 *11* | 1.53 *17* |
| γ | 701.0 *5* | ~0.14 |
| γ | 722.57 *12* | 0.82 *14* |
| γ | 733.96 *12* | 0.65 *14* |
| γ[E1] | 847.1 *5* | 0.51 *17* |
| γ[E1] | 853.61 *12* | 34 |
| γ[E1] | 865.00 *12* | 15.5 *3* |
| γ | 1333.3 *4* | ~0.17 |
| γ | 1344.7 *4* | ~0.10 |
| γ | 1396.0 *4* | ~0.17 |
| γ | 1407.4 *4* | ~0.10 |

### Continuous Radiation ($^{237}$Pa)

⟨β-⟩=572 keV;⟨IB⟩=0.91 keV

| $E_{bin}$(keV) | | ⟨ ⟩(keV) | (%) |
|---|---|---|---|
| 0 - 10 | β- | 0.0424 | 0.84 |
| | IB | 0.024 | |
| 10 - 20 | β- | 0.128 | 0.85 |
| | IB | 0.024 | 0.164 |
| 20 - 40 | β- | 0.52 | 1.74 |
| | IB | 0.045 | 0.158 |
| 40 - 100 | β- | 3.83 | 5.5 |
| | IB | 0.122 | 0.19 |
| 100 - 300 | β- | 40.2 | 19.9 |
| | IB | 0.30 | 0.170 |
| 300 - 600 | β- | 134 | 29.9 |
| | IB | 0.24 | 0.058 |
| 600 - 1300 | β- | 325 | 37.7 |
| | IB | 0.149 | 0.019 |
| 1300 - 2250 | β- | 68 | 4.45 |
| | IB | 0.0103 | 0.00069 |

## $^{237}_{92}$U (6.75 *1* d)

Mode: $\beta$-
Δ: 45387.2 *22* keV
SpA: 8.162×10$^{4}$ Ci/g
Prod: $^{236}$U(n,γ); $^{238}$U(n,2n)

### Photons ($^{237}$U)

⟨γ⟩=144 *9* keV

| $\gamma_{mode}$ | γ(keV) | γ(%)† |
|---|---|---|
| Np $L_{\ell}$ | 11.871 | 1.5 *3* |
| γ M1+0.1%E2 | 13.804 *16* | 0.101 *4* |
| Np $L_{\alpha}$ | 13.927 | 25 *4* |
| Np $L_{\eta}$ | 15.861 | 0.48 *7* |
| Np $L_{\beta}$ | 17.592 | 30 *5* |
| Np $L_{\gamma}$ | 20.990 | 7.2 *12* |
| γ E1 | 26.3445 *10* | 2.29 *13* |
| γ M1+1.8%E2 | 33.1920 *14* | 0.11 *5* |
| γ(M1+~43%E2) | 42.64 *3* | |
| γ M1+14%E2 | 43.415 *10* | 0.033 *3* |
| γ E1 | 51.013 *18* | 0.20 *9* |
| γ E1 | 59.5364 *10* | 32.8 *18* |
| γ E1 | 64.817 *13* | 1.16 *12* |
| γ[E1] | 69.760 *10* | |
| γ(E2) | 75.83 *3* | |
| Np $K_{\alpha2}$ | 97.066 | 16 *3* |
| Np $K_{\alpha1}$ | 101.059 | 26 *4* |
| γ E1 | 102.952 *10* | 0.0087 *9* |
| Np $K_{\beta1}$' | 113.944 | 9.6 *15* |
| γ | 114.08 *5* | |
| Np $K_{\beta2}$' | 117.891 | 3.3 *5* |
| γ E2 | 164.593 *11* | 1.83 *6* |
| γ M1+2.4%E2 | 208.008 *9* | 22 |
| γ E2 | 221.812 *17* | 0.0204 *13* |
| γ M2 | 234.352 *9* | 0.0194 *13* |
| γ E1+19%M2 | 267.544 *9* | 0.712 *14* |
| γ[E2] | 292.76 *3* | 0.0027 *4* |
| γ E2 | 332.361 *13* | 1.20 *5* |
| γ M1+18%E2 | 335.401 *14* | 0.097 *5* |
| γ(E2) | 337.727 *19* | 0.0086 *7* |
| γ M1(+<8.8%E2) | 368.592 *14* | 0.0455 *24* |
| γ M1+12%E2 | 370.919 *19* | 0.108 *6* |

† 11% uncert(syst)

### Atomic Electrons ($^{237}$U)

⟨e⟩=121 *9* keV

| $e_{bin}$(keV) | ⟨e⟩(keV) | e(%) |
|---|---|---|
| 5 - 17 | 7.7 | 83 *5* |
| 18 | 3.4 | 19 *3* |
| 21 | 0.78 | 3.7 *4* |
| 22 | 5.5 | 25 *4* |
| 23 - 37 | 4.7 | 14.4 *13* |
| 38 | 6.0 | 15.8 *9* |
| 39 - 51 | 2.30 | 5.4 *3* |
| 54 | 4.08 | 7.6 *4* |
| 55 - 85 | 1.49 | 2.32 *12* |
| 89 | 50.0 | 56 *9* |
| 91 - 116 | 0.70 | 0.71 *5* |
| 142 - 174 | 5.02 | 3.37 *6* |
| 186 | 20.4 | 11.0 *18* |
| 190 - 200 | 0.21 | 0.112 *18* |
| 202 | 4.7 | 2.3 *4* |
| 203 - 250 | 3.7 | 1.73 *14* |
| 252 - 293 | 0.297 | 0.115 *6* |
| 310 - 353 | 0.425 | 0.133 *3* |
| 363 - 371 | 0.0178 | 0.00486 *23* |

### Continuous Radiation ($^{237}$U)

⟨β-⟩=66 keV;⟨IB⟩=0.016 keV

| $E_{bin}$(keV) | | ⟨ ⟩(keV) | (%) |
|---|---|---|---|
| 0 - 10 | β- | 0.51 | 10.3 |
| | IB | 0.0034 | |
| 10 - 20 | β- | 1.45 | 9.7 |
| | IB | 0.0027 | 0.019 |
| 20 - 40 | β- | 5.2 | 17.5 |
| | IB | 0.0039 | 0.0140 |
| 40 - 100 | β- | 25.7 | 38.2 |
| | IB | 0.0050 | 0.0086 |
| 100 - 252 | β- | 32.9 | 23.9 |
| | IB | 0.00105 | 0.00087 |

## $^{237}_{93}$Np(2.140 *10* ×10$^{6}$ yr)

Mode: α
Δ: 44868.3 *21* keV
SpA: 0.000705 Ci/g
Prod: daughter $^{237}$U

### Alpha Particles ($^{237}$Np)

⟨α⟩=4760 *4* keV

| α(keV) | α(%) |
|---|---|
| 4386 *25* | 0.020 |
| 4513.5 *5* | ~0.04 |
| 4574.7 *5* | 0.05 |
| 4577.9 *5* | 0.40 *4* |
| 4595 *2* | 0.08 |
| 4598.4 *5* | 0.34 *4* |
| 4639.5 *5* | 6.18 *12* |
| 4659.2 *20* | 0.6 |
| 4664.6 *5* | 3.32 *10* |
| 4697.1 *7* | 0.48 *20* |
| 4707.1 *5* | 1.0 |
| 4712.9 *5* | 0.13 |
| 4741.4 *20* | 0.019 |
| 4766.1 *5* | 8 *3* |
| 4771.5 *5* | 25 *6* |
| 4788.4 *5* | 47 *9* |
| 4804.0 *5* | 1.6 |
| 4817.3 *5* | 2.5 *4* |
| 4862.9 *20* | 0.24 |
| 4866.9 *5* | ~0.3 |
| 4873.4 *5* | 2.6 *2* |

### Photons ($^{237}$Np)

⟨γ⟩=32.7 *20* keV

| $\gamma_{mode}$ | γ(keV) | γ(%)† |
|---|---|---|
| Pa $L_{\ell}$ | 11.372 | 1.15 *15* |
| Pa $L_{\alpha}$ | 13.274 | 19.2 *19* |
| Pa $L_{\eta}$ | 14.953 | 0.47 *6* |
| Pa $L_{\beta}$ | 16.632 | 25 *3* |
| Pa $L_{\gamma}$ | 19.718 | 5.8 *8* |
| γ E1 | 29.378 *9* | 12.9 *17* |
| γ[E1] | 46.57 *3* | 0.133 *19* |
| γ E2 | 57.149 *15* | 0.39 *4* |
| γ[M1+E2] | 62.66 *4* | ~0.012 |
| γ(E2) | 63.95 *3* | 0.016 *4* |
| γ[M1+E2] | 70.62 *3* | 0.016 *4* ? |
| γ[M1+E2] | 74.46 *4* | 0.0111 *24* |
| γ E1 | 86.528 *14* | 12.6 |
| γ[E1] | 88.05 *4* | 0.18 *3* |
| Pa $K_{\alpha2}$ | 92.279 | 1.59 *13* |
| γ E1 | 94.723 *21* | 0.76 *8* |
| Pa $K_{\alpha1}$ | 95.863 | 2.58 *21* |
| γ[E2] | 106.13 *5* | 0.056 *6* |
| Pa $K_{\beta1}$' | 108.166 | 0.94 *8* |
| γ M1+<4.6%E2 | 108.69 *3* | 0.073 *13* |
| Pa $K_{\beta2}$' | 111.897 | 0.31 *3* |
| γ[M1+E2] | 115.19 *3* | 0.0025 *7* ? |
| γ M1+10%E2 | 117.689 *22* | 0.161 *19* |
| γ E1 | 131.09 *3* | 0.085 *8* |
| γ[M1+E2] | 134.23 *3* | 0.067 *7* |
| γ[E1] | 140.61 *7* | 0.018 *5* ? |
| γ M1+14%E2 | 143.227 *21* | 0.39 *3* |
| γ M1+12%E2 | 151.423 *24* | 0.24 *3* |
| γ[E2] | 153.72 *10* | 0.0069 *16* |
| γ E1 | 155.263 *21* | 0.092 *8* |
| γ[E1] | 162.51 *4* | 0.037 *3* |
| γ[E1] | 169.18 *4* | 0.072 *7* |
| γ[M1+E2] | 170.67 *5* | 0.019 *3* |
| γ | 172.56 *20* | 0.0068 *18* |
| γ[M1+E2] | 176.09 *4* | 0.020 *4* |
| γ[E1] | 180.801 *25* | 0.023 *3* |
| γ[E1] | 186.7 *5* | 0.0067 *13* |
| γ[M1+E2] | 191.46 *5* | 0.027 *4* |

Photons ($^{242}$Np)
(continued)

| $\gamma_{mode}$ | $\gamma$(keV) | $\gamma$(%)† |
|---|---|---|
| $\gamma$ | 1984.8 *5* | 0.05 *1* |
| $\gamma$ | 1992.4 *3* | 0.20 *1* |
| $\gamma$ | 2042.7 *7* | 0.04 *1* |
| $\gamma$ | 2061.4 *10* | 0.03 *1* |
| $\gamma$ | 2077.1 *5* | 0.065 *15* |
| $\gamma$ | 2201.8 *4* | 0.060 *15* |
| $\gamma$ | 2246.4 *4* | 0.045 *15* |
| $\gamma$ | 2358.2 *5* | ~0.050 |
| $\gamma$ | 2370.8 *5* | ~0.050 |

† 8.0% uncert(syst)

Continuous Radiation ($^{242}$Np)
$\langle\beta-\rangle$=894 keV;$\langle$IB$\rangle$=2.0 keV

| $E_{bin}$(keV) | | $\langle\ \rangle$(keV) | (%) |
|---|---|---|---|
| 0 - 10 | $\beta$- | 0.0288 | 0.57 |
| | IB | 0.034 | |
| 10 - 20 | $\beta$- | 0.086 | 0.58 |
| | IB | 0.033 | 0.23 |
| 20 - 40 | $\beta$- | 0.348 | 1.16 |
| | IB | 0.064 | 0.22 |
| 40 - 100 | $\beta$- | 2.49 | 3.54 |
| | IB | 0.18 | 0.28 |
| 100 - 300 | $\beta$- | 24.2 | 12.1 |
| | IB | 0.49 | 0.28 |
| 300 - 600 | $\beta$- | 82 | 18.3 |
| | IB | 0.50 | 0.119 |
| 600 - 1300 | $\beta$- | 353 | 37.9 |
| | IB | 0.55 | 0.066 |
| 1300 - 2500 | $\beta$- | 428 | 25.4 |
| | IB | 0.138 | 0.0089 |
| 2500 - 2700 | $\beta$- | 2.90 | 0.114 |
| | IB | $3.1\times10^{-5}$ | $1.23\times10^{-6}$ |

## $^{242}_{94}$Pu(3.763 *20* $\times10^5$ yr)

Mode: $\alpha$, SF(0.000550 *6* %)
Δ: 54713.9 *21* keV
SpA: 0.003926 Ci/g
Prod: multiple n-capture from $^{238}$U; multiple n-capture from $^{239}$Pu; daughter $^{242}$Am(16.01 h)

Alpha Particles ($^{242}$Pu)
$\langle\alpha\rangle$=4890 *1* keV

| $\alpha$(keV) | $\alpha$(%) |
|---|---|
| 4598.4 *7* | 0.0013 *5* |
| 4754.6 *7* | 0.098 *17* |
| 4856.4 *7* | 22.4 *20* |
| 4900.6 *7* | 78 *3* |

Photons ($^{242}$Pu)
$\langle\gamma\rangle$=1.39 *19* keV

| $\gamma_{mode}$ | $\gamma$(keV) | $\gamma$(%)† |
|---|---|---|
| U $L_\zeta$ | 11.620 | 0.20 *5* |
| U $L_\alpha$ | 13.600 | 3.3 *7* |
| U $L_\eta$ | 15.400 | 0.081 *18* |
| U $L_\beta$ | 17.128 | 4.1 *9* |
| U $L_\gamma$ | 20.292 | 0.91 *21* |
| $\gamma$\|E2\| | 44.915 *13* | 0.036 |
| $\gamma$\|E2\| | 103.50 *4* | 0.0078 *8* |
| $\gamma$\|E2\| | 158.80 *8* | 0.00045 *15* |

† 14% uncert(syst)

Atomic Electrons ($^{242}$Pu)
$\langle e\rangle$=8.1 *7* keV

| $e_{bin}$(keV) | $\langle e\rangle$(keV) | e(%) |
|---|---|---|
| 17 | 0.66 | 3.9 *9* |
| 21 | 0.66 | 3.1 *7* |
| 22 | 0.0110 | 0.051 *11* |
| 23 | 0.068 | 0.29 *6* |
| 24 | 2.1 | 8.6 *17* |
| 28 | 2.1 | 7.5 *15* |
| 39 | 0.034 | 0.087 *18* |
| 40 | 0.91 | 2.3 *5* |
| 41 | 0.88 | 2.2 *4* |
| 43 | 0.0111 | 0.025 *5* |
| 44 | 0.53 | 1.21 *25* |
| 45 | 0.16 | 0.35 *7* |

## $^{242}_{95}$Am(16.01 *2* h)

Mode: $\beta$-(82.7 *3* %), $\epsilon$(17.3 *3* %)
Δ: 55463.2 *22* keV
SpA: $8.088\times10^5$ Ci/g
Prod: $^{241}$Am(n,$\gamma$); multiple n-capture from $^{238}$U; multiple n-capture from $^{239}$Pu

Photons ($^{242}$Am)
$\langle\gamma\rangle$=18.0 *16* keV

| $\gamma_{mode}$ | $\gamma$(keV) | $\gamma$(%)† |
|---|---|---|
| Pu $L_\zeta$ | 12.124 | 0.30 *6* |
| Cm $L_\zeta$ | 12.633 | 0.48 *11* |
| Pu $L_\alpha$ | 14.262 | 4.8 *8* |
| Cm $L_\alpha$ | 14.939 | 7.3 *16* |
| Pu $L_\eta$ | 16.333 | 0.078 *13* |
| Cm $L_\eta$ | 17.314 | 0.17 *4* |
| Pu $L_\beta$ | 18.082 | 4.9 *9* |
| Cm $L_\beta$ | 19.191 | 8.6 *19* |
| Pu $L_\gamma$ | 21.608 | 1.07 *20* |
| Cm $L_\gamma$ | 22.878 | 1.9 *4* |
| $\gamma_\beta$E2 | 42.2 *1* | 0.039 |
| $\gamma$E2 | 44.533 *9* | 0.0137 *5* |
| Pu $K_{\alpha2}$ | 99.522 | 3.6 *7* |
| Pu $K_{\alpha1}$ | 103.734 | 5.8 *12* |
| Pu $K_{\beta1}$' | 116.930 | 2.1 *4* |
| Pu $K_{\beta2}$' | 120.974 | 0.72 *15* |

† uncert(syst): 1.7% for $\epsilon$, 0.36% for $\beta$-

Atomic Electrons ($^{242}$Am)
$\langle e\rangle$=19.1 *13* keV

| $e_{bin}$(keV) | $\langle e\rangle$(keV) | e(%) |
|---|---|---|
| 18 | 0.93 | 5.2 *10* |
| 19 | 4.5 | 24 *5* |
| 21 | 0.0313 | 0.146 *6* |
| 22 | 1.50 | 6.8 *6* |
| 23 | 3.6 | 16 *3* |
| 24 | 1.3 | 5.5 *12* |
| 25 | 0.030 | 0.12 *3* |
| 26 | 0.92 | 3.46 *13* |
| 36 | 1.8 | 4.9 *10* |
| 37 | 1.6 | 4.2 *8* |
| 38 | 0.040 | 0.106 *21* |
| 39 | 0.439 | 1.13 *4* |
| 40 | 0.391 | 0.98 *4* |
| 41 | 1.08 | 2.7 *5* |
| 42 - 86 | 0.83 | 1.76 *16* |
| 93 - 116 | 0.128 | 0.131 *11* |

Continuous Radiation ($^{242}$Am)
$\langle\beta-\rangle$=159 keV;$\langle$IB$\rangle$=0.30 keV

| $E_{bin}$(keV) | | $\langle\ \rangle$(keV) | (%) |
|---|---|---|---|
| 0 - 10 | $\beta$- | 0.133 | 2.66 |
| | IB | 0.0080 | |
| 10 - 20 | $\beta$- | 0.395 | 2.64 |
| | IB | 0.0082 | 0.056 |
| 20 - 40 | $\beta$- | 1.56 | 5.2 |
| | IB | 0.0134 | 0.047 |
| 40 - 100 | $\beta$- | 10.5 | 15.0 |
| | IB | 0.108 | 0.133 |
| 100 - 300 | $\beta$- | 74 | 39.0 |
| | IB | 0.150 | 0.120 |
| 300 - 600 | $\beta$- | 71 | 18.2 |
| | IB | 0.0106 | 0.0029 |
| 600 - 749 | $\beta$- | 0.401 | 0.065 |
| | IB | $7.4\times10^{-5}$ | $1.21\times10^{-5}$ |

## $^{242}_{95}$Am(141 *2* yr)

Mode: IT(99.55 *2* %), $\alpha$(0.45 *2* %)
Δ: 55511.8 *22* keV
SpA: 10.48 Ci/g
Prod: $^{241}$Am(n,$\gamma$)

Alpha Particles ($^{242}$Am)
$\langle\alpha\rangle$=23.2 keV

| $\alpha$(keV) | $\alpha$(%) |
|---|---|
| 5064.2 *5* | 0.0010 |
| 5088.5 *3* | 0.0009 |
| 5141.3 *4* | 0.026 |
| 5207.04 *21* | 0.4 |
| 5314.5 *4* | 0.003 |
| 5367.37 *21* | 0.005 |
| 5409.76 *21* | 0.005 |

# A = 243

NDS 33, 79 (1981)

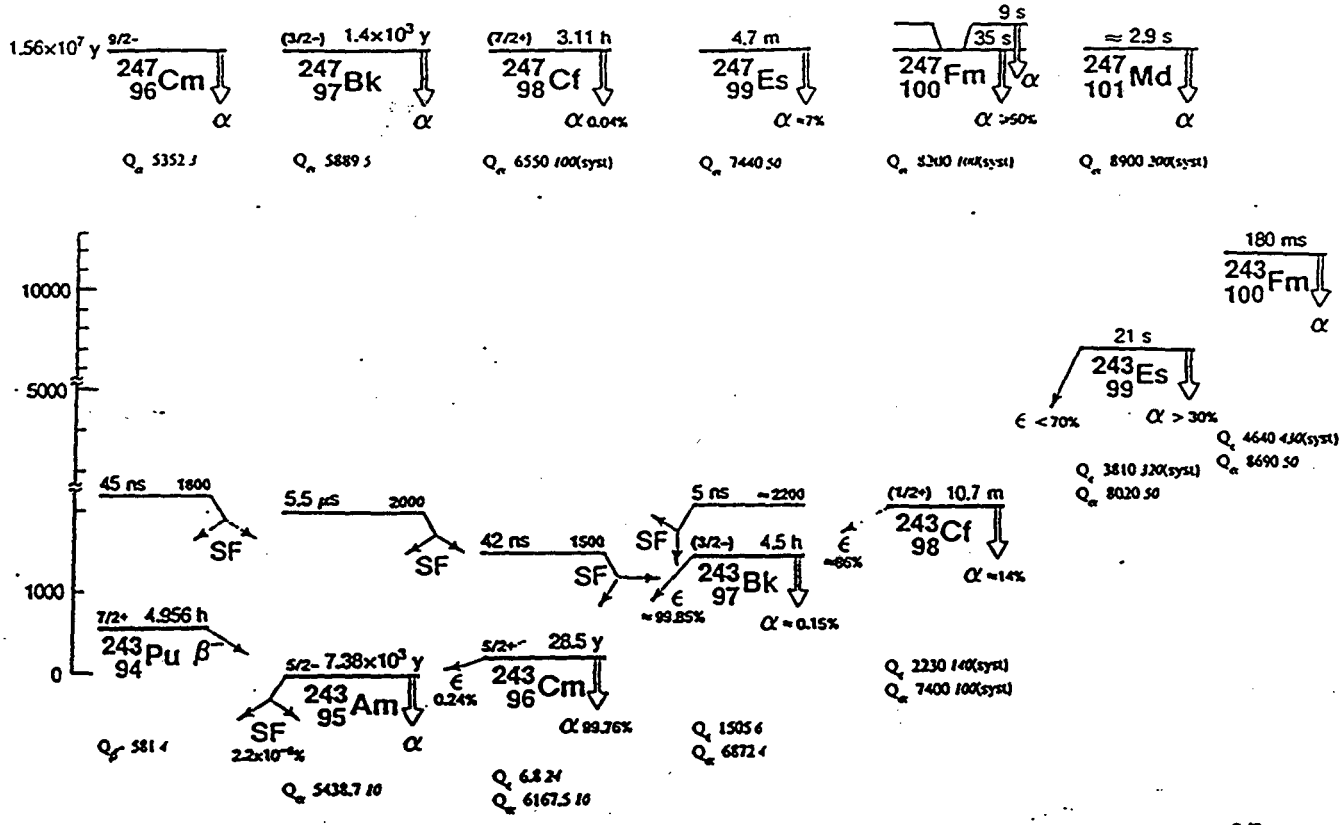


## $^{243}_{94}$Pu(4.956 5 h)

Mode: β-

Δ: 57751 3 keV

SpA: 2.602×10$^6$ Ci/g

Prod: $^{242}$Pu(n,γ)

### Photons ($^{243}$Pu)

⟨γ⟩=26 4 keV

| γmode | γ(keV) | γ(%)† |
|---|---|---|
| Am $L_\zeta$ | 13.377 | 0.37 15 |
| Am $L_\alpha$ | 15.599 | 5.7 23 |
| Am $L_\eta$ | 16.819 | 0.09 4 |
| Am $L_\beta$ | 18.884 | 6.2 25 |
| Am $L_\gamma$ | 22.290 | 1.5 6 |
| γ[E1] | 41.75 18 | 0.76 7 |
| γ M1+~7.8%E2 | 42.20 22 | ~0.08 |
| γ[M1+E2] | 54.1 4 | <0.023 |
| γ[E1] | 67.06 25 | ~0.23 |
| γ E1 | 83.95 16 | 23 5 |
| γ(E2) | 96.3 4 | 0.0138 23 |
| γ[E1] | 101.3 5 | <0.037 |
| Am $K_{\alpha2}$ | 102.026 | 0.113 15 |
| Am $K_{\alpha1}$ | 105.472 | 0.178 24 |
| γ[E1] | 109.27 17 | 0.161 16 |
| Am $K_{\beta1}$' | 119.960 | 0.066 9 |
| Am $K_{\beta2}$' | 124.123 | 0.022 3 |
| γ[M1+E2] | 322.11 25 | 0.0276 23 |
| γ[M1+E2] | 343.2 5 | ~0.0014 |
| γ(M1+E2) | 356.37 21 | 0.131 12 |
| γ M1 | 381.68 21 | 0.55 5 |
| γ[M1+E2] | 388.91 25 | 0.0046 7 |
| γ | 407.0 5 | ~0.0009 |
| γ[M1+E2] | 423.17 23 | 0.0122 14 |
| γ[E2] | 448.5 5 | ~0.00023 |
| γ[E1] | 465.64 21 | <0.00023 |

### Atomic Electrons ($^{243}$Pu)

⟨e⟩=12.5 12 keV

| $e_{bin}$(keV) | ⟨e⟩(keV) | e(%) |
|---|---|---|
| 6 - 15 | 0.6 | ~6 |
| 18 | 0.8 | 4.3 21 |
| 19 | 0.6 | 3.2 15 |
| 20 | 1.0 | ~5 |
| 21 - 22 | 0.24 | ~1 |
| 23 | 1.2 | 5.5 24 |
| 24 | 0.40 | ~2 |
| 25 - 35 | 0.9 | 3.0 14 |
| 36 | 0.7 | 1.9 9 |
| 37 - 40 | 0.28 | 0.7 3 |
| 41 | 0.28 | 0.7 3 |
| 42 - 54 | 0.46 | 1.0 4 |
| 60 | 0.94 | 1.6 3 |
| 61 | 0.72 | 1.18 24 |
| 62 - 63 | 0.0039 | 0.0062 25 |
| 64 | 0.69 | 1.08 22 |
| 65 - 77 | 0.164 | 0.22 3 |
| 78 | 0.49 | 0.63 15 |
| 79 - 119 | 0.61 | 0.74 7 |
| 197 - 231 | 0.14 | ~0.06 |
| 257 | 0.83 | 0.32 3 |
| 264 - 303 | 0.024 | ~0.008 |
| 316 - 365 | 0.29 | 0.082 10 |
| 366 - 407 | 0.084 | 0.0222 14 |
| 417 - 466 | 0.0011 | 0.00025 12 |

### Continuous Radiation ($^{243}$Pu)

⟨β-⟩=161 keV;⟨IB⟩=0.091 keV

| $E_{bin}$(keV) | | ⟨ ⟩(keV) | (%) |
|---|---|---|---|
| 0 - 10 | β- | 0.211 | 4.22 |
| | IB | 0.0082 | |
| 10 - 20 | β- | 0.62 | 4.12 |
| | IB | 0.0075 | 0.052 |
| 20 - 40 | β- | 2.38 | 8.0 |
| | IB | 0.0131 | 0.046 |
| 40 - 100 | β- | 15.0 | 21.7 |
| | IB | 0.028 | 0.044 |
| 100 - 300 | β- | 92 | 49.0 |
| | IB | 0.031 | 0.020 |
| 300 - 581 | β- | 51 | 13.9 |
| | IB | 0.0026 | 0.00076 |

## $^{243}_{95}$Am(7380 40 yr)

Mode: α, SF(2.2 2 ×10$^{-8}$ %)

Δ: 57171 3 keV

SpA: 0.1993 Ci/g

Prod: multiple n-capture from $^{238}$U; multiple n-capture from $^{239}$Pu

### Alpha Particles ($^{243}$Am)

⟨α⟩=5265.6 keV

| α(keV) | α(%) |
|---|---|
| 4698.7 5 | 0.0017 5 |
| 4918.4 5 | 9×10$^{-5}$ |
| 4930 3 | 0.00018 |
| 4946 3 | 0.0003 |
| 4997 3 | 0.0016 † |
| 5008 3 | |

### Alpha Particles ($^{243}$Am) (continued)

| α(keV) | α(%) |
|---|---|
| 5029 *3* | 0.0022 § |
| 5037.6 *19* | |
| 5088 *3* | 0.004 |
| 5112.7 *5* | 0.005 |
| 5179.8 *5* | 1.1 |
| 5234.3 *5* | 11 |
| 5276.6 *5* | 88 |
| 5319.4 *5* | 0.12 |
| 5350.0 *5* | 0.16 |

† 4997α + 5008α
§ 5029α + 5038α

### Photons ($^{243}$Am)

⟨γ⟩=48.1 *9* keV

| $\gamma_{mode}$ | γ(keV) | γ(%)† |
|---|---|---|
| γ M1+0.1%E2 | 31.136 *4* | 0.066 *6* |
| γ M1+13%E2 | 43.03 *3* | 0.058 *12* |
| γ E1 | 43.537 *3* | 5.10 *22* |
| γ [E1] | 50.8 *18* | 0.0026 *5* |
| γ M1+~39%E2 | 55.40 *4* | 0.0092 *18* |
| γ E1 | 74.672 *3* | 60.0 *12* |
| γ E1 | 86.57 *3* | 0.30 *3* |
| γ (E2) | 98.43 *4* | ~0.008 |
| γ E1 | 117.70 *3* | 0.55 *7* |
| γ E1 | 141.97 *4* | 0.114 *12* |
| γ [E1] | 170.14 *5* | 0.00120 *24* |
| γ [E1] | 195.3 *11* | 0.00084 *17* |
| γ | 220.0 *10* | |
| γ | 544.55 *3* | 1.7 *4*×10$^{-5}$ |
| γ | 587.579 *18* | |
| γ | 631.116 *18* | 0.00033 *5* |
| γ | 662.251 *18* | 0.00095 *15* |

† 10% uncert(syst)

## $^{243}_{96}$Cm(28.5 *2* yr)

Mode: α(99.76 *4* %), ε(0.24 *4* %)
Δ: 57177.3 *24* keV
SpA: 51.6 Ci/g
Prod: multiple n-capture from $^{238}$U; multiple n-capture from $^{239}$Pu

### Alpha Particles ($^{243}$Cm)

⟨α⟩=5838 keV

| α(keV) | α(%) |
|---|---|
| 5226 *15* | 0.0004 |
| 5267 *5* | 0.0015 |
| 5316 *3* | 0.0010 |
| 5323 *5* | 0.003 |
| 5332 *3* | 0.003 |
| 5519.7 *7* | 0.0020 |
| 5532 *3* ? | 0.006 |
| 5537 *5* | 0.0020 |
| 5569.4 *5* | 0.007 |
| 5575 *3* ? | 0.007 |
| 5582.6 *6* | ~0.009 |
| 5587 *3* | ~0.020 |
| 5593 *3* ? | 0.010 |
| 5604.6 *6* | <0.010 |
| 5612 *3* | ~0.030 |
| 5622 *10* ? | 0.06 |
| 5639 *5* | 0.14 |
| 5646 *3* ? | 0.03 |
| 5681.5 *5* | 0.20 |
| 5685.6 *5* | 1.6 |

### Alpha Particles ($^{243}$Cm) (continued)

| α(keV) | α(%) |
|---|---|
| 5713 *5* ? | <0.040 |
| 5742.0 *5* | 10.57 *20* |
| 5785.9 *5* | 73.3 *10* |
| 5876 *3* | 0.6 |
| 5905.6 *5* | 0.10 |
| 5992.2 *5* | 6.48 *20* |
| 6010.3 *5* | 1.0 |
| 6058.9 *5* | 5 |
| 6066.6 *5* | 1.5 |

### Photons ($^{243}$Cm)

⟨γ⟩=131.6 *15* keV

| $\gamma_{mode}$ | γ(keV) | γ(%)† |
|---|---|---|
| Pu $L_\zeta$ | 12.124 | 1.16 *14* |
| Pu $L_\alpha$ | 14.262 | 18.5 *17* |
| Pu $L_\eta$ | 16.333 | 0.28 *4* |
| Pu $L_\beta$ | 18.074 | 18.7 *24* |
| Pu $L_\gamma$ | 21.624 | 4.2 *6* |
| $\gamma_e$M1+3.6%E2 | 44.665 *3* | 0.116 *12* |
| $\gamma_e$M1+20%E2 | 49.4152 *19* | 0.064 *7* |
| $\gamma_e$E2 | 57.2759 *18* | 0.090 *6* |
| $\gamma_e$M1+E2 | 57.278 *4* | 0.024 *8* |
| $\gamma_e$E1 | 61.462 *4* | 0.0111 *18* |
| $\gamma_e$E2 | 67.8462 *22* | |
| $\gamma_e$M1+20%E2 | 88.057 *18* | |
| Pu $K_{\alpha2}$ | 99.522 | 14.4 *4* |
| $\gamma_e$E2 | 101.943 *5* | ~0.009 |
| Pu $K_{\alpha1}$ | 103.734 | 23.0 *6* |
| $\gamma_e$E1+0.3%M2 | 106.1272 *23* | 0.262 *23* |
| $\gamma_e$E2 | 106.488 *18* | |
| Pu $K_{\beta1}$' | 116.930 | 8.32 *24* |
| Pu $K_{\beta2}$' | 120.974 | 2.87 *9* |
| $\gamma_e$M1 | 166.364 *18* | 0.019 *8* |
| $\gamma_e$M1+0.08%E2 | 209.7554 *17* | 3.27 *9* |
| $\gamma_e$M1+0.6%E2 | 228.1865 *15* | 10.56 *25* |
| $\gamma_e$M1+1.7%E2 | 254.421 *4* | 0.110 *8* |
| $\gamma_e$M1 | 272.852 *4* | 0.083 *7* |
| $\gamma_e$M1+2.6%E2 | 277.6016 *16* | 14.0 *4* |
| $\gamma_e$E2 | 285.4624 *15* | 0.733 *18* |
| $\gamma_e$(M1+E2) | 311.698 *5* | 0.0175 *20* |
| $\gamma_e$E1+2.3%M2 | 315.8825 *23* | 0.0183 *13* |
| $\gamma_e$[E2] | 322.267 *4* | 0.0063 *21* |
| $\gamma_e$E1+0.1%M2 | 334.3136 *23* | 0.0237 *16* |
| $\gamma_e$[E1] | 392.3 *5* | |
| $\gamma_e$[E1] | 429.87 *18* | |
| $\gamma_e$[E1] | 434.9 *3* | |
| $\gamma_e$[E1] | 448.30 *18* | |
| $\gamma_e$[E1] | 461.9 *4* | |
| $\gamma_e$[E1] | 469.7 *4* | |
| $\gamma_e$[E1] | 484.3 *3* | |
| $\gamma_e$[E1] | 492.2 *3* | |
| $\gamma_e$[E1] | 497.71 *18* | |
| $\gamma_e$[E1] | 498.8 *5* | |
| $\gamma_e$ | 640.0 *25* | |
| $\gamma_e$ | 680.0 *25* | |
| $\gamma_e$ | 720.0 *25* | |
| $\gamma_e$ | 740.0 *25* | |
| $\gamma_e$ | 760.0 *25* | |

†<0.1% uncert(syst)

### Atomic Electrons ($^{243}$Cm)

⟨e⟩=112.9 *18* keV

| $e_{bin}$(keV) | ⟨e⟩(keV) | e(%) |
|---|---|---|
| 18 | 3.0 | 16.4 *20* |
| 22 | 3.6 | 16.5 *22* |
| 23 - 38 | 6.2 | 20 *3* |
| 39 | 3.5 | 9.0 *16* |
| 40 - 86 | 5.7 | 10.8 *9* |
| 88 | 8.1 | 9.2 *3* |
| 93 - 105 | 0.51 | 0.53 *3* |

### Atomic Electrons ($^{243}$Cm) (continued)

| $e_{bin}$(keV) | ⟨e⟩(keV) | e(%) |
|---|---|---|
| 106 | 24.7 | 23.2 *7* |
| 110 - 151 | 0.491 | 0.361 *18* |
| 156 | 27.2 | 17.5 *6* |
| 160 - 166 | 0.113 | 0.069 *3* |
| 187 | 3.35 | 1.79 *6* |
| 190 - 204 | 0.93 | 0.455 *16* |
| 205 | 8.4 | 4.09 *13* |
| 206 - 253 | 4.92 | 2.24 *4* |
| 254 | 7.8 | 3.07 *10* |
| 255 - 304 | 4.52 | 1.68 *3* |
| 306 - 334 | 0.0041 | 0.0013 *4* |

## $^{243}_{97}$Bk(4.5 *2* h)

Mode: ε(~ 99.85 %), α(~ 0.15 %)
Δ: 58682 *6* keV
SpA: 2.87×10$^{6}$ Ci/g
Prod: $^{241}$Am(α,2n); $^{242}$Cm(d,n); $^{243}$Am(α,4n)

### Alpha Particles ($^{243}$Bk)

⟨α⟩= 9.8 *3* keV

| α(keV) | α(%) |
|---|---|
| 6182 *4* | 0.0058 *8* |
| 6210 *3* | 0.0204 *13* |
| 6394 *25* | ~0.00030 |
| 6446 *5* | 0.0010 *3* |
| 6502 *4* | 0.0104 *10* |
| 6542 *4* | 0.0291 *19* |
| 6573.8 *22* | 0.0384 *24* |
| 6605 *5* | ~0.0010 |
| 6666 *4* | ~0.0018 |
| 6718.0 *22* | 0.0188 *13* |
| 6758.1 *22* | 0.0231 *15* |

### Photons ($^{243}$Bk)

⟨γ⟩=176 *41* keV

| $\gamma_{mode}$ | γ(keV) | γ(%) |
|---|---|---|
| $\gamma_e$[M1+E2] | 40.7 *5* | ~0.006 |
| $\gamma_e$E2 | 87.4 *1* | |
| $\gamma_e$(E1) | 146.6 *5* | 0.012 *5* |
| $\gamma_e$(E1) | 187.4 *4* | 0.060 *15* |
| $\gamma_e$[M1] | 557 *4* | 0.015 *3* |
| $\gamma_e$ | 755 *2* | 10.0 *20* |
| $\gamma_e$ | 840 *40* | 3.0 *6* |
| $\gamma_e$ | 946 *2* | ~8 |

## $^{243}_{98}$Cf(10.7 *5* min)

Mode: ε(~ 86 %), α(~ 14 %)
Δ: 60910 *140* keV syst
SpA: 7.2×10$^{7}$ Ci/g
Prod: $^{235}$U($^{12}$C,4n); $^{236}$U($^{12}$C,5n); $^{238}$U($^{12}$C,7n); $^{242}$Cm($^{3}$He,2n)

# A = 248

NDS 32, 119 (1981)

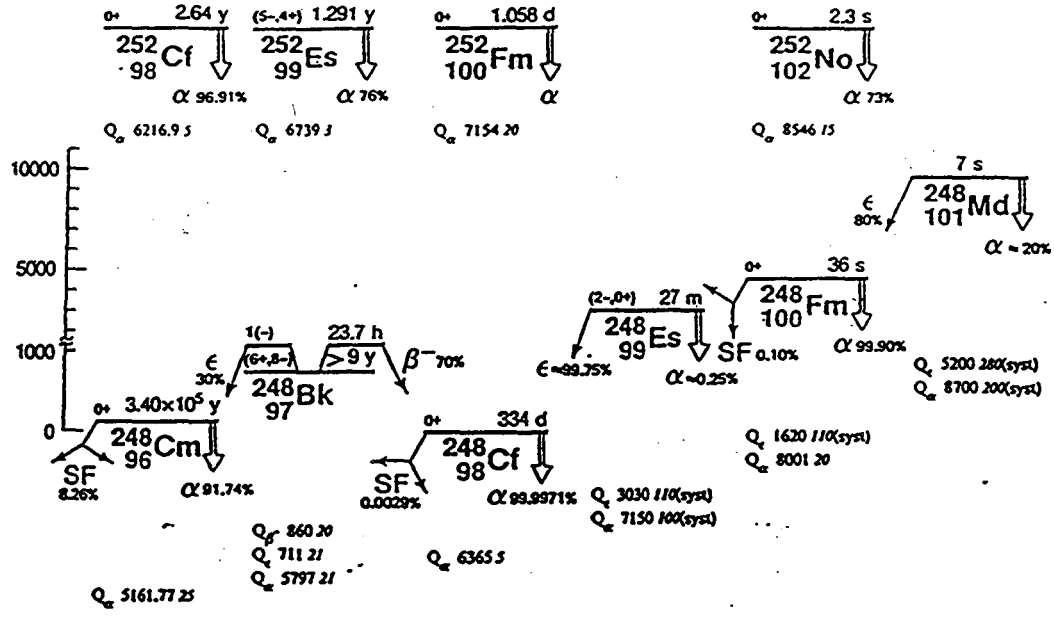


## $^{248}_{96}$Cm(3.40 3 ×10$^5$ yr)

Mode: α(91.74 3 %), SF(8.26 3 %)
Δ: 67388 5 keV
SpA: 0.00424 Ci/g
Prod: daughter $^{252}$Cf
multiple n-capture from $^{238}$U;
multiple n-capture from $^{239}$Pu;
multiple n-capture from $^{244}$Cm

### Alpha Particles ($^{248}$Cm)

⟨α⟩=4652.4 3 keV

| α(keV) | α(%) |
|---|---|
| 4776.0 15 | <0.009 |
| 4931.1 5 | 0.070 11 |
| 5034.93 25 | 16.54 17 |
| 5078.45 25 | 75.1 4 |

## $^{248}_{97}$Bk(>9 yr)

decay not observed
Δ: 68099 21 keV
SpA: <160 Ci/g
Prod: $^{246}$Cm(α,pn)

## $^{248}_{97}$Bk(23.7 2 h)

Mode: β-(70 5 %), ε(30 5 %)
Δ: 68099 21 keV
SpA: 5.33×10$^5$ Ci/g
Prod: $^{247}$Bk(n,γ); $^{245}$Cm(α,p)

### Photons ($^{248}$Bk)

⟨γ⟩=55 6 keV

| $\gamma_{mode}$ | γ(keV) | γ(%)† |
|---|---|---|
| Cm $L_\ell$ | 12.633 | 0.40 10 |
| Cf $L_\ell$ | 13.146 | ~0.28 |
| Cm $L_\alpha$ | 14.939 | 6.0 14 |
| Cf $L_\alpha$ | 15.636 | ~4 |
| Cm $L_\eta$ | 17.314 | 0.079 20 |
| Cf $L_\eta$ | 18.347 | ~0.10 |
| Cm $L_\beta$ | 19.083 | 5.7 14 |
| Cf $L_\beta$ | 20.303 | ~5 |
| Cm $L_\gamma$ | 22.966 | 1.3 3 |
| Cf $L_\gamma$ | 24.273 | ~1 |
| $\gamma_\beta$[E2] | 41.3 10 | ~0.016 |
| $\gamma_\gamma$E2 | 43.399 25 | ~0.002 |
| Cm $K_{\alpha2}$ | 104.586 | 6.2 12 |
| Cm $K_{\alpha1}$ | 109.271 | 9.8 20 |
| Cf $K_{\alpha2}$ | 109.826 | 0.0160 6 |
| Cf $K_{\alpha1}$ | 115.032 | 0.0249 9 |
| Cm $K_{\beta1}$' | 123.059 | 3.6 7 |
| Cm $K_{\beta2}$' | 127.344 | 1.25 25 |
| Cf $K_{\beta1}$' | 129.436 | 0.0093 3 |
| Cf $K_{\beta2}$' | 133.949 | 0.00328 13 |
| $\gamma_\beta$E1 | 550.7 1 | 5.0 10 |

† uncert(syst): 17% for ε, 7.1% for β-

### Atomic Electrons ($^{248}$Bk)

⟨e⟩=10.5 15 keV

| $e_{bin}$(keV) | ⟨e⟩(keV) | e(%) |
|---|---|---|
| 15 | 0.06 | ~0.37 |
| 16 | 1.5 | ~10 |
| 19 | 0.93 | 4.9 12 |
| 20 | 0.9 | ~4 |
| 21 | 1.7 | ~8 |
| 24 | 0.76 | 3.2 10 |
| 25 | 1.0 | 4.1 18 |
| 26 | 0.018 | ~0.07 |
| 35 | 1.0 | ~3 |
| 36 | 0.8 | ~2 |
| 37 - 39 | 0.20 | 0.52 18 |
| 40 | 0.6 | ~1 |
| 41 - 90 | 0.53 | 0.94 23 |
| 95 - 129 | 0.222 | 0.217 17 |
| 416 | 0.229 | 0.0552 16 |
| 525 - 551 | 0.0750 | 0.01415 24 |

### Continuous Radiation ($^{248}$Bk)

⟨β-⟩=174 keV;⟨IB⟩=0.52 keV

| $E_{bin}$(keV) | | ⟨ ⟩(keV) | (%) |
|---|---|---|---|
| 0 - 10 | β- | 0.095 | 1.90 |
| | IB | 0.0085 | |
| 10 - 20 | β- | 0.281 | 1.88 |
| | IB | 0.0095 | 0.064 |
| 20 - 40 | β- | 1.10 | 3.68 |
| | IB | 0.0151 | 0.053 |
| 40 - 100 | β- | 7.2 | 10.4 |
| | IB | 0.134 | 0.162 |
| 100 - 300 | β- | 53 | 27.2 |
| | IB | 0.32 | 0.26 |
| 300 - 600 | β- | 93 | 21.9 |
| | IB | 0.027 | 0.0071 |
| 600 - 860 | β- | 20.4 | 3.06 |
| | IB | 0.00076 | 0.000120 |

US 02-09

# EXPERIMENT RENEWAL FORM

(Please print or type)

**EXPERIMENT:**

| | |
|---|---|
| Title of experiment: | Electron Spectroscopy of Actinides |
| I.D. Number: | 93-012 |
| Beamline: | 7.0 |
| Date of Original Form/Experiment: | 08 April 1994 |
| Date of Completion of this form: | 18 Jan. 1996 |

**EXPERIMENTER IN CHARGE:**

| | |
|---|---|
| Name: | David Shuh |
| Affiliation: | LBNL |
| Address: | 70A-1147A, LBNL, Berkeley, CA |
| Phone: | (510) 486-6937 |
| Local Address: | MS 70A-1150, LBNL, Berkeley, CA |
| Local Phone: | (510) 486-6937 |

**List Schedules Attached (from ALS Experiment Form):**

Schedule A and attachments

Check box if Renewal Request does not include changes: ☐

Check box if Renewal Request includes changes: ☒

Attach Experiment Modification Form if changes are included in renewal.

18 Jan. 1996

Signature/Experimenter-In-Charge Date

# EXPERIMENT MODIFICATION FORM

(Please print or type)

## EXPERIMENT:

| | |
|---|---|
| Title of experiment: | Electron Spectroscopy of Actinides |
| I.D. Number: | 93-012 |
| Beamline: | 7.0 |
| Date of completion of this form: | 18 Jan. 1996 |

## EXPERIMENTER-IN-CHARGE:

| | |
|---|---|
| Name: | David Shuh |
| Office Phone: | (510) 486-6937 |

| List modifications to the experiment (completed by Experimenter In Charge) (Operations Coordinator will determine type of change) | | | | Type of Change | |
|---|---|---|---|---|---|
| | | | | Minor | Significant |
| | | | | | |
| Cleaver installed in special prep chamber to permit cleavage of sample ingot. | | | | | |
| | | | | | |
| Four samples allowed on the ALS floor at any one time. | | | | | |
| | | | | | |
| Two samples permitted in the vacuum chamber simultaneously. | | | | | |
| | | | | | |
| Increased amount of sample materials permitted for experiments: | | | | | |
| | | | | | |
| | 0.5% limit | SpA | Allowed Mass | | |
| 238 uranium | 75 µCi | $3.33 \times 10^{-7}$ Ci/g | ~2 g | | |
| 237 neptunium | 75 nCi | $7.05 \times 10^{-4}$ Ci/g | 100 µg | | |
| 242 plutonium | 75 nCi | $3.926 \times 10^{-3}$ Ci/g | 19 µg | | |
| 248 curium | 75 nCi | $4.24 \times 10^{-3}$ Ci/g | 17 µg | | |
| | | | | | |
| Addition of three new elements: | | | | | |
| | | | | | |
| | 0.5% limit | SpA | Allowed Mass | | |
| 99 technetium | 15 µCi | $1.7 \times 10^{-2}$ Ci/g | 440 µg | | |
| 243 americium | 75 nCi | 0.199 Ci/g | 375 ng | | |
| 232 thorium | 750 nCi | $1.1 \times 10^{-1}$ Ci/g | 145 mg | | |
| **Schedules from ALS Experiment Form Attached:** Schedules A and attachment | | | | | |

18 Jan. 1996

Signature/Experimenter-in-Charge Date

OR

Approval/Operations Coordinator Date

Approval/ALS EH&S Program Manager or Designee Date

I.D. Number:

| Substance (Include samples and CAS No.—if applicable) | Radio Active | Cryogenic* | Flamm. | Corrosive | Carcinogenic | Total Volume | Quantity Required on Floor | State (gas, solid, or liquid) | Point of Discharge (air, water waste, none) |
|---|---|---|---|---|---|---|---|---|---|
| uranium-238 | yes | NO | NO | NO | NO | ≈1/4 cc | <5 g | SOLID | NONE |
| neptunium-237 | yes | NO | NO | NO | NO | $1 \times 10^{-5}$ cc | 200 mg | SOLID | NONE |
| plutonium-242 | yes | NO | NO | NO | NO | | 38 mg | SOLID | NONE |
| cerium-248 | yes | NO | NO | NO | NO | | 35 mg | SOLID | NONE |
| americium-243 | yes | NO | NO | NO | NO | | 44 mg | SOLID | NONE |
| technetium-99 | yes | NO | NO | NO | NO | $8 \times 10^{-5}$ cc | 880 mg | SOLID | NONE |
| thorium-232 | yes | NO | NO | NO | NO | $1 \times 10^{-2}$ cc | 145 mg | SOLID | NONE |
| | | | | | | | | | |
| | | | | | | | | | |
| | | | | | | | | | |
| | | | | | | | | | |
| | | | | | | | | | |
| | | | | | | | | | |
| | | | | | | | | | |

* Cryogenic systems can be portential pressure hazards. Therefore, the design of cryogenic systems must be reviewed by a qualified LBL mechanical engineer. Precautions when handling cryogenics are described in Chapter 7 of PUB-3000, with additional information found in Chapter 30.

**Addendum to the ALS Experimental Safety Form**
**Renewal for Cm Microspot Experiments**

Jerry Bucher, Actinide Chemistry Group, CSD, LBL, (510) 486-4484
Norman Edelstein, Actinide Chemistry Group, CSD, LBL, (510) 486-5624
David Shuh, Actinide Chemistry Group, CSD, LBL, (510) 486-6937

02 Nov. 1994

This is an addendum to the ALS Experimental Safety Form Renewal for the continuation of curium microspot experiments on beamlines 7.0 and 10.3.1. There is the addition of the low activity isotopes $^{238}U$, $^{237}Np$, and $^{242}Pu$ to the list of permissible sample materials. There will also be continued use of $^{248}Cm$. These materials are alpha-emitters with negligible gamma fields.

The samples to be examined immediately will be $^{248}Cm$ to complete work on curium and the initial investigation of one or more of the other radionuclides, time permitting. The preliminary date for the next run of these sample materials has been tentatively scheduled on 15-18 Nov. 1994 with beamline 7.0 personnel. All procedures requiring EH&S assistance will be scheduled as far in advance as experimentally feasible.

The previous addendum to the original ALS Experimental Safety Form, an example of the radiation survey logsheet, the previously approved RWA (RWP), and copies of pertinent information relating to the radionuclides of interest are attached to this addendum.

## PROCEDURES

### *Sample Preparation*

The sample preparation will follow the previously approved procedures. However, the initial experience gained from sample preparation and experimental work at beamline 7.0, will allow the use of even less radioactive material than before. This

safety addendum reflects material amounts used at the previous levels. All sample preparation and characterization of the activity of the samples will be done in Bldg. 70A-1129, 1145 under existing RWA procedures. The radionuclides used as sample materials will be prepared by dilution and delivered to the surface of a Pt counting disk or to a graphite disk (with a thin layer of Pt on the backside) using a microliter pipette. The resulting material will be primarily oxides of the particular radionuclide. The aqueous solvent will be removed by inductive heating. The radionuclide will be bonded to the substrate during this process as well. The samples will be observed under a microscope and the radioactivity characterized in a calibrated alpha spectrometer to determine the total activity. Each sample will be limited to a maximum of 20 nCi total activity and less material will be used when possible. The amount of material will be typically around 1μg or less. The adhesion of the radionuclide to the substrate will be determined by testing sample structures to ensure that there is no loose active material. The sample will be loaded onto the sample holder to be used on beamline 7.0 or 10.3.1 at this time. Thus, there will be no handling of the sample on the experimental floor with exception of unpacking, loading, unloading, and re-packaging to transport back to the 70A-1129,1145 laboratories. The properties of the various isotopes to be used as sample materials and the allowable (20 nCi) limits are summarized in Table I. The sample isotopes are never completely isotopically pure, thus a substantial portion of the total activity of the radionuclide sample may result from trace amounts of isotopic impurities.

## ALS PROCEDURES

Only one sample at a time will be brought to the ALS and there will be only one sample resident on the ALS floor at any time. Sample identification and the results of the alpha spectroscopy (total activity) will be provided to the ALS EH&S monitor, as well as to ALS control room and operations personnel when the sample is brought to the ALS.

The sample will be packaged and removed from the preparation laboratories in conjunction with EH&S, as per standard operating procedures. The sample container will be labeled "CAUTION-Radioactive Material" to warn personnel that a radioactive source is present. The samples will be transported to the ALS, with prior notification of the ALS EH&S monitor, in accordance with EH&S regulations.

Swipes of the sample will be taken by the EH&S monitor upon placement in the chamber and after each use of a sample. The sample will be loaded into the experimental chamber with a procedure utilizing laboratory coats, gloves, alpha meter, TLD/film badges, and beta-gamma meters that will be brought to the ALS by appropriately trained/supervised personnel from the Actinide Chemistry Group. The sample chamber or endstation will be labeled "CAUTION-Radioactive Material" to warn personnel that a radioactive sample is present.

**Beamline 7.0**

The radionuclide substrate and microsample will be affixed with spring-loaded clips or spot-welded clips to the sample holder from beamline 7.0. The sample will be loaded into the sample load lock immediately. The sample will be transferred under vacuum into the photoemission spectrometer on beamline 7.0 (Eli Rotenberg and Jonathon Denlinger, local contacts). The sample may require a brief ion bombardment to clean the surface, then the electron spectroscopy measurements will be performed.

The sample will be removed from the chamber, swipes taken of the sample transfer apparatus, and returned to 70A-1129,1145 for assay. Swipes of the vacuum chamber will be taken after the chamber is vented to atmosphere for the first convenient opportunity following the completion of these experiments. The total activity of the sample will be determined to ensure that no material has been lost. The sample will be re-counted and the results given to the ALS Safety Officers. Radiation survey logsheets will also be given to EH&S personnel. At this time, another sample may be taken to the ALS by the aforementioned procedures.

**Beamline 10.3.1**

These experiments are in the process of being scheduled. The procedures for the microprobe beamline experiments will be the same as detailed for beamline 7.0, with the exception that the samples do not have to be placed in a vacuum chamber. Thus, the same counting, transportation, and swiping protocols will be employed. The sample will be brought to the ALS in a closed container already mounted on the microprobe sample holder contained within multiply sealed 0.002" polyethylene bags or other multiply-contained sample holder.

Ernest Orlando Lawrence Berkeley National Laboratory
One Cyclotron Road | Berkeley, California 94720

Prepared for the U.S. Department of Energy under Contract No. DE-AC03-76SF00098