LBNL-40532
UC-406

ERNEST ORLANDO LAWRENCE BERKELEY NATIONAL LABORATORY

Bipolar Pulsed Reset for AC Coupled Charge-Sensitive Preamplifiers

D.A. Landis, N.M. Madden, and F.S. Goulding

Engineering Division

July 1997

To be presented at the *Nuclear Science Symposium,* Albuquerque, NM, November 11–13, 1997, and to be published in the Proceedings

LOAN COPY
Circulates
For 4 weeks

Bldg 50 Lib Rm 4014
Lawrence Berkeley National Laboratory

Copy 2

LBNL-40532

DISCLAIMER

This document was prepared as an account of work sponsored by the United States Government. While this document is believed to contain correct information, neither the United States Government nor any agency thereof, nor the Regents of the University of California, nor any of their employees, makes any warranty, express or implied, or assumes any legal responsibility for the accuracy, completeness, or usefulness of any information, apparatus, product, or process disclosed, or represents that its use would not infringe privately owned rights. Reference herein to any specific commercial product, process, or service by its trade name, trademark, manufacturer, or otherwise, does not necessarily constitute or imply its endorsement, recommendation, or favoring by the United States Government or any agency thereof, or the Regents of the University of California. The views and opinions of authors expressed herein do not necessarily state or reflect those of the United States Government or any agency thereof or the Regents of the University of California.

LBNL-40532
UC-406

Bipolar Pulsed Reset for AC Coupled Charge-Sensitive Preamplifiers

D.A. Landis, N.M. Madden, F.S. Goulding

Earnest Orlando Lawrence Berkeley National Laboratory
University of California
Engineering Division
Engineering Science Department, Measurement Science Group
1 Cyclotron Road
Berkeley, California 94720

July 1997

This work was supported by the U. S. Department of Energy, Office of High Energy Physics under Contract No. DE-AC03-76SF00098 and National Aeronautics and Space Administration Award No. N18836.

Bipolar Pulsed Reset for AC Coupled Charge-Sensitive Preamplifiers

D.A. Landis, N. W. Madden and F. S. Goulding
Lawrence Berkeley National Laboratory
Engineering Division
Engineering Science Department, Measurement Science Group
1 Cyclotron Rd., Berkeley, California 94720

Abstract

A new type of charge restoration is described for use particularly in germanium gamma-ray spectrometers for accelerator and space physics applications. A bipolar pulsed reset technique is applied to these applications for the first time. This technique overcomes the problems introduced by the need to AC couple detectors and the fact that very large energy depositions occur due to charged particles present in substantial fluxes, particularly in space. The circuit is described and experimental results are presented and discussed.

I. Introduction

Germanium gamma-ray detector spectrometers used in accelerator and space applications are subject to mechanical and thermal constraints that generally result in the need to AC couple the detector to the preamplifier. Standard practice in these applications therefore involves the use of a high-valued resistor (~ 1 KMohm) across the feedback capacitor and pole-zero cancellation in the following pulse shaping amplifier to correct for the exponential signal decay resulting from the feedback RC differentiation. The poor frequency behavior of most high-valued resistors limits our ability to provide perfect pole-zero cancellation and therefore impairs the performance at high rates. Furthermore, the resistor contributes significant noise, thereby worsening the energy resolution particularly in the low-energy part of the spectrum. Even more important, particularity in the space environment, the detector system, that is generally designed to perform well in the gamma-ray energy range up to a few MeV, is subjected to a high rate (~ 100/s.) of large overload signals due to the large flux of ionizing particles. Typically, protons and single-charged ions will deposit up to a few hundred MeV while the rarer alpha particles and heavier ions can deposit more than 1 GeV. These large signals greatly overload the preamplifier and the long feedback time constant (~ 1 ms.) means that the spectrometer exhibits a long dead time following these high-energy events resulting in large losses of gamma ray signals. The purpose of the work described here is to eliminate these problems by applying a pulsed reset method in place of the feedback resistor. This avoids the normal consequences of the imperfect feedback resistor and also means that very large input signals can be reset quickly. So far as we know, pulsed reset methods have only previously been employed in systems where the detector was DC coupled to the preamplifier input.

II. Bipolar Pulsed Reset Design

Figure 1 shows the overall pulsed reset design in block form. High voltage is supplied to the detector via the large-valued resistor R_L and the detector signal is coupled to the gate of the preamplifier's input FET via C_C. The feedback capacitor in the charge-sensitive preamplifier is connected to the detector load, thereby permitting the use of a smaller value of C_C than would otherwise be required. This is an obvious advantage in these applications where space is restricted. The feedback capacitor must, however, be chosen to withstand the full detector voltage while retaining its value and stability.

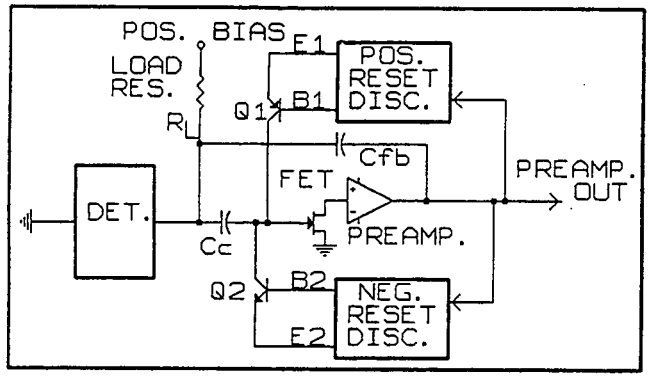

Fig. 1. Block diagram of biopolar pulsed-reset preamplifier circuit with AC coupled detector.

Note that reset transistors Q1 and Q2 are provided to produce resets in both directions. This is necessary because the current in C_C flows in both directions with the fast detector charge pulses in one direction and the slow recharge current due to R_L in the opposite direction. Incidentally, this means that this preamplifier configuration is applicable to either polarity of detector signals. Q1 and Q2 are normally not conducting.

In the rest condition with no detector signals, the base to collector leakage currents of Q1 and Q2 and the drain to gate leakage current of the FET flow into the FET gate circuit; since the last of these is usually largest, even at room temperature the output voltage of the preamplifier drifts down very slowly until the negative reset discriminator fires and Q2 is turned on.

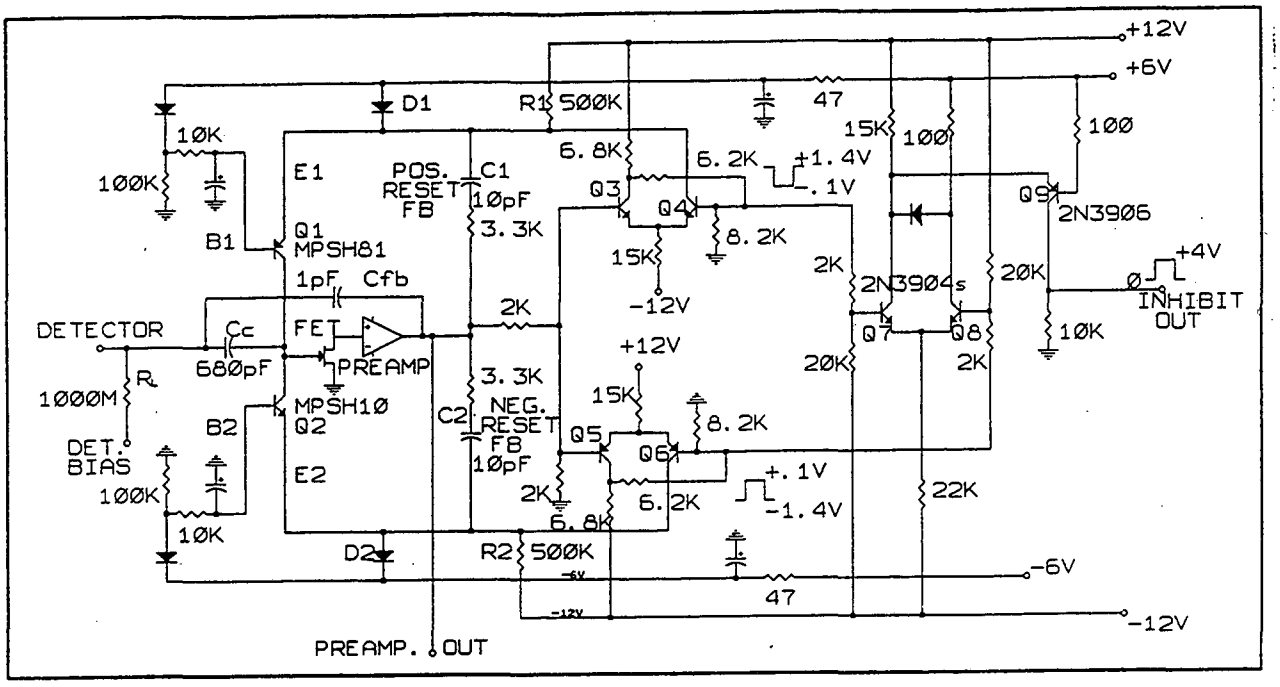

Figure 2. Schematic diagram the bipolar pulsed-reset circuit.

This causes a rapid positive movement in the output voltage until it reaches a level (about +0.2V) determined by backlash in the discriminator, then Q2 is turned off. The reset process occurs in a controlled manner taking about 3 us. A similar mechanism occurs in the positive reset discriminator and Q1, when positive excursions occur in the preamplifier output voltage due for example, to detector signals Thus the action of the two discriminators is always to confine the preamplifier output voltage to the linear range. The resets occupy very little time and occur very infrequently in normal operation (typically a few per second).

With the detector bias polarity shown in Fig. 1, if a very large detector signal occurs, the voltage at the junction of R_L and C_c (i.e. the detector voltage) falls immediately and the output of the preamplifier steps positive to exceed 2.8V. The positive reset discriminator then fires and the preamplifier output is driven down to -0.2V at which point the positive discriminator turns off the reset The preamplifier is operating in its linear range a few microseconds after the large signal occurred. .The DC current now flowing in R_L causes a slow fall in the preamplifier output voltage and if no further detector pulses occur, the negative discriminator fires when the voltage reaches -2.8V restoring the voltage to +0.2V. As long as the detector voltage has not returned to its full bias value, this process continues and successive triggering of the negative reset discriminator occur until the current in R_L disappears. Further detector pulses will disturb this process but the important thing is that the preamplifier remains in its linear range. It is obvious that the design of the preamplifier must be such that excellent linearity is exhibited over the full range of about +3v to -3v at the output, which is less dynamic range than most resistor feedback preamplifiers would require.

A more detailed schematic of the whole circuit is shown in Fig. 2 The output of the preamplifier section feeds via a 2:1 attenuator to a pair of "complementary" Schmitt trigger circuits Q3, Q4 and Q5, Q6. Except during resets, Q1, Q2, Q3, Q5 and Q7 are non-conducting while Q4 and Q6 are conducting causing D1 and D2 to pass 0.8 mA. The low impedances on the emitters of Q1 and Q2 in this condition prevent excess noise being fed via the non-conducting reset transistor shunt capacitances to the gate of the FET. When the preamplifier output exceeds +2.8V, the Q3, Q4 circuit triggers, turning Q4 off and the current in R1 is released to flow into the emitter of Q1 and via the collector of Q1 to the FET gate. This causes a downward movement in the preamplifier output voltage and the feedback via C1 (in parallel with C_{FB}) controls the rate of voltage change so that it reaches -0.2V in about 3 us. At this point the Q3, Q4 circuit relaxes back to its rest state with Q4 conducting and Q1 again non-conducting. A similar action occurs in the negative reset circuit when the preamplifier output falls below -2.8V. When either type of reset occurs, the circuit containing Q7, Q8 and Q9 produces a positive logic output that can be used to inhibit later signal processing circuits including the base-line recovery circuit. Note that R1 and R2 must be selected bearing in mind that the emitter to collector current gains (alpha) of Q1 and Q2 (generally near unity at room temperature) fall steeply when the transistors are operated at low temperatures. If the preamplifier is operated at room temperature this can be neglected.

III. Experimental Results and Discussion

Figure 3 shows the front end arrangement used for the tests presented here. The closed-end N-type germanium detector was 67mm diameter and 61mm long and was operated at about 85 K with the preamplifier components that are all external to the cryostat and at room temperature (including the detector load and coupling and feedback capacitors). In this setup, the detector was operated with -5000V applied to the outside P+ contact and the signal was derived from the center electrode at ground potential with a 1GΩ resistor as the detector load and a

680pF capacitor coupling the signal to the FET gate. This type of charge restoration should work with most charge-sensitive preamplifier configurations. The one used here was a double-folded cascode followed by an emitter follower and buffer operating with supplies of +12V and -12V and in addition contained a fast signal pickoff circuit. (ref 1) The FET was an Interfet 2N6453 operating with 9mA drain current and 3V drain voltage.

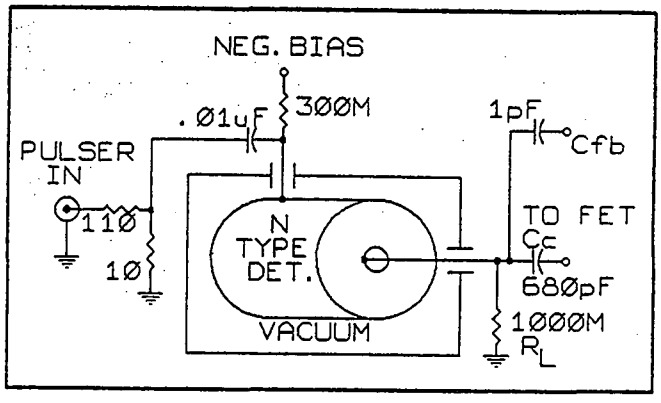

Fig. 3. Drawing of the detector and front-end connections used in the test.

Figure 4 shows the behavior of the preamplifier output when a large (~100MeV) event occurs in the detector. This event immediately causes the positive reset discriminator to fire and the output voltage falls (arrow 1) in about 4us to about -0.2V. The reset time is longer than 3us because there is a small delay before the reset turns on, and the large event causes the output of the preamplifier to step past the normal 2.8V threshold of this reset circuit, for a short time. The delay occurs because the current in R1 has to charge up the stray capacitance on the emitter of Q1 before Q1 turns on. The small positive step (arrow 2) is due to the back edge of the emitter pulse coupling through the emitter-to-collector capacitance of Q1. It is clearly important to use a reset transistor with a very small emitter-to-collector capacitance and base to collector leakage (I_{cbo}) current. On the time scale used for Fig. 4, the baseline following the small positive step appears to be flat for a substantial time. However in the absence of further detector pulses, it drifts down very slowly as shown in the longer time scale of Fig. 5, until the negative reset discriminator fires. Figure 5 shows the after-effects of the large (~100MeV) event that occurred at a time of about 0.25sec. in this figure. A series of negative reset discriminator firings occurs over a period of 4 seconds. Six or seven resets are shown in this figure with the time between resets slowly increasing as the current in R_L falls. The number of these resets is determined by how large an energy is deposited in the detector and the time constant by the product of the values of R_L, C_{FB} and the open loop gain of the preamplifier. This time constant can be easily several seconds. The presence of some detector signals (positive steps) superimposed on the negative drift due to the combined effect of current in R_L and the drain to gate FET leakage current, are clearly seen in the last few cycles observed in Fig. 5.

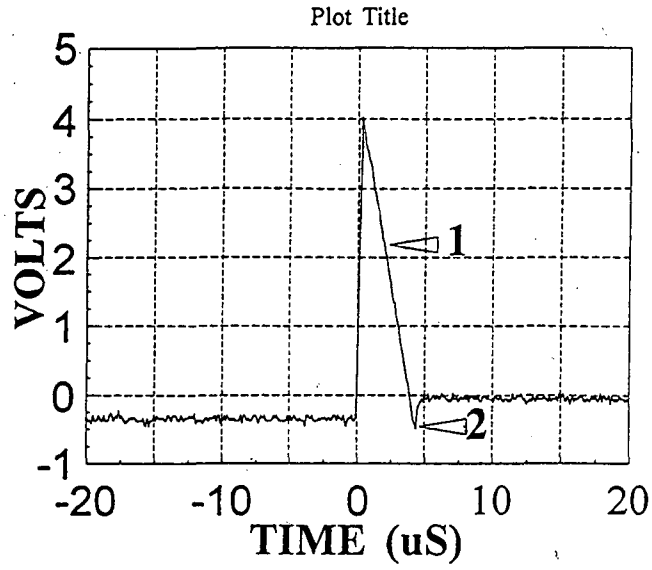

Fig.4. Oscillograph of preamplifier output when a large signal is deposited in the detector. The resulting positive reset circuit returns the output close to zero volts. The arrows 1 & 2 are explained in the text.

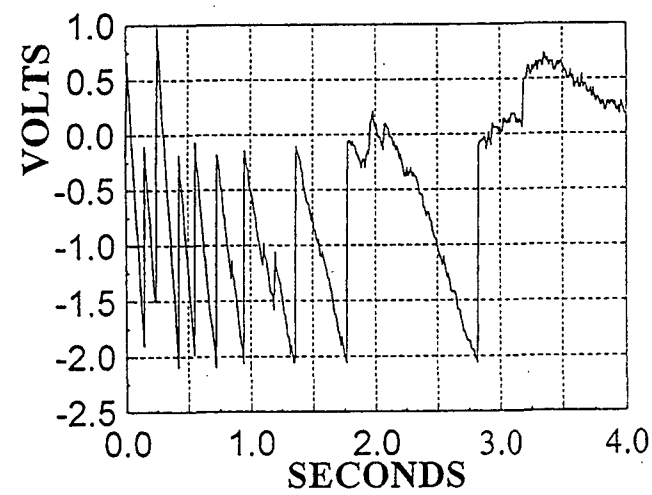

Fig. 5. Oscillograph of the preamplifier output, on a long time scale, showing a series of firings of the negative reset circuit restoring the detector voltage after a large signal occurs in the detector.

The preamplifier output was connected to a Tennelec TC244 amplifier in order to determine the overall performance of a spectrometer using this charge restoration method. A quasi-triangular shaper with its output peaking at 8us was used in these tests with no pole/zero cancellation. Figure 6 shows the unipolar output of the amplifier when a large signal triggers the positive reset discriminator (at time zero in the figure). The negative pulse after zero time is produced by the positive reset circuit causing the amplifier to see a large

negative step during the reset. The amplifier is designed to accept this signal and prevent any output during this time. This is the same result as a standard DC coupled transistor reset preamplifier would produce. The other positive pulses are the ^{60}Co events in the detector. Figure 7 shows the amplifier output produced when the negative reset discriminator fires. It behaves simply as a very large detector signal.

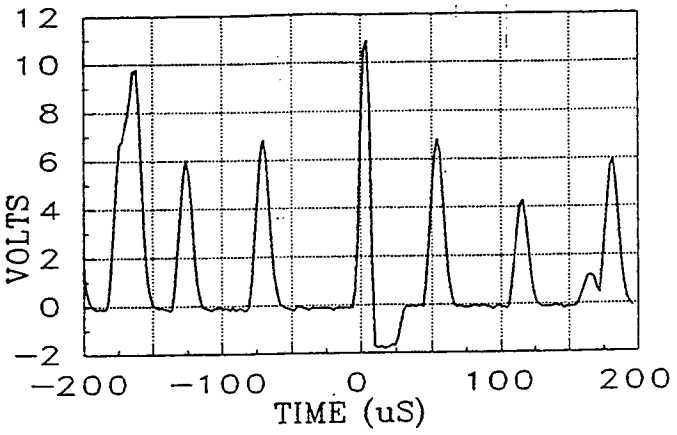

Fig. 6. Oscillograph of output of amplifier when a large event (at time zero) triggers the positive reset circuit causing a negative pulse.

The energy resolution was measured in the system. The measured resolution for the pulser was 1.3KeV and 2.29KeV for the 1.33MeV line of ^{60}Co at a low rate of 4000 counts per second. Figure 8 shows the energy spectrum of ^{60}Co at this low rate. The 1.33MeV resolution degraded to 2.33KeV at 20K cps.

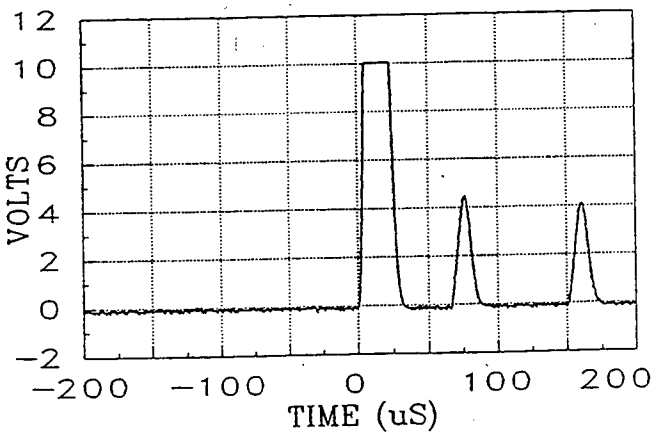

Fig. 7. Oscillograph of output of amplifier when the negative reset circuit triggers.

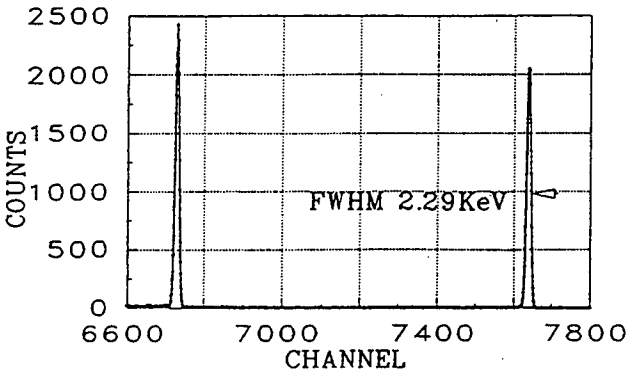

Fig. 8. Energy spectrum of ^{60}Co with system measured at 4000 cp.

We must point out that the system as described in this paper will exhibit some energy dependent losses due to the dead time imposed by resets. This occurs because a large signal will be more likely to cause a reset than a small one, and when a reset occurs the signal that causes it is lost. The energy dependent losses are not as severe as in the DC coupled transistor reset because the detector current in the AC coupled system does not flow into the input of the FET, which would cause the output of the preamplifier to ramp in a positive direction which is the same direction as the signal. In the AC coupled reset system the charging and discharging of the AC coupling tends to keep the output of the preamplifier around zero volts and the gate leakage current of the FET causes the output to ramp more negative, in the opposite direction to the signal. The previously published method can be employed (ref 2) to eliminate the energy-dependent losses by providing two positive reset discriminators. The thresholds of the two discriminators differ by more than the voltage produced by the largest "normal" signal to be analyzed. When only the lower threshold discriminator is triggered, a wait time is introduced to allow the amplifier to process the event. Then the preamplifier resets. If the discriminator with the higher threshold is triggered, the preamplifier resets immediately thereby keeping the preamplifier in its linear range.

IV. Conclusion

As shown in this paper, this configuration of preamplifier offers substantial advantages over more conventional approaches wherever AC coupling is used from the detector and/or where very large overload signals occur. It can also be used in a broad range of applications with detectors of either polarity, and with ones operated at room temperature as contrasted with the low temperature operation of the detector used in this work. The fact that no pole/zero compensation is needed is a major advantage, particularly in long-term space flight systems where drift in the feedback resistor used in normal preamplifiers (due to temperature and time) are difficult to handle.

A simple, but quite accurate, explanation of the configuration is that the biphase reset arrangement forces the

preamplifier to operate in its linear range at all times. It is clearly a more complex scheme to achieve this end than a simple feedback resistor and a minor penalty is paid in a small dead-time loss during resets. However, the performance gains more than justify the complexity in many spectrometers and the dead-time losses are generally insignificant.

V. Acknowledgments

We would like to thank Chris Cork for his help in constructing and setting up the detector system used in these tests. Conversations with other members o the Measurement Science Group and with experimental groups in the Lawrence Berkeley National Laboratory Nuclear Science Division and the Space Sciences Laboratory of the University of California have focused our attention on the problems address in this work.

This work was supported by the U. S. Department of Energy, Office of High Energy Physics under Contract No. DE-AC03-76SF00098 and National Aeronautics and Space Administration Award No. N18836.

Reference to a company or product name does not imply approval or recommendation of the product by the University of California or the U.S. Department of Energy to the exclusion of others that may be suitable.

VI. References

1) "Gammasphere-Correction Technique for Detector Charge Trapping", F.S. Goulding and D.A. Landis, IEEE Transactions on Nuclear Science, Vol. 41, No. 4, Aug. 1994, 145-149 Fig. 2

2) Philhour B. et al, NIM 1997, not published

3) "Energy-Dependent Losses in Pulsed-Feedback Preamplifiers", D.A. Landis, N.W. Madden and F.S. Goulding, IEEE Transactions on Nuclear Science, Vol. NS-26, No. 1, Feb. 1994, 428-432

Ernest Orlando Lawrence Berkeley National Laboratory
One Cyclotron Road | Berkeley, California 94720

Prepared for the U.S. Department of Energy under Contract No. DE-AC03-76SF00098

AAF781
LBL Libraries