LBNL-40765
UC-414

ERNEST ORLANDO LAWRENCE
BERKELEY NATIONAL LABORATORY

FEL Options for Power Beaming

K.-J. Kim, A.A. Zholents, M.S. Zolotorev,
and N.A. Vinokurov

**Accelerator and Fusion
Research Division**

October 1997

Presented at the
*International FEL Conference 1997
and 4th FEL Users' Workshop,*
Beijing, China, August 18–22, 1997,
and to be published in
*Nuclear Instruments and Methods
in Physics Research A*

REFERENCE COPY
Does Not
Circulate
Bldg. 50 Library - Ref.
Lawrence Berkeley National Laboratory
LBNL-40765
Copy 1

DISCLAIMER

This document was prepared as an account of work sponsored by the United States Government. While this document is believed to contain correct information, neither the United States Government nor any agency thereof, nor the Regents of the University of California, nor any of their employees, makes any warranty, express or implied, or assumes any legal responsibility for the accuracy, completeness, or usefulness of any information, apparatus, product, or process disclosed, or represents that its use would not infringe privately owned rights. Reference herein to any specific commercial product, process, or service by its trade name, trademark, manufacturer, or otherwise, does not necessarily constitute or imply its endorsement, recommendation, or favoring by the United States Government or any agency thereof, or the Regents of the University of California. The views and opinions of authors expressed herein do not necessarily state or reflect those of the United States Government or any agency thereof or the Regents of the University of California.

LBNL-40765
CBP Note-238
UC-414

FEL Options for Power Beaming*

K.-J. Kim[1], A. A. Zholents[1],
M. S. Zolotorev[1], and N. A. Vinokurov[2]

[1]Lawrence Berkeley National Laboratory, One Cyclotron Road,
MS 71-259, Berkeley, CA 94720 USA
Fax No. 510-486-6485
[2]Budker Institute of Nuclear Physics, 630090, Novosibirsk, Russia

October 1997

* This work was supported by the Director, Office of Energy Research, Office of High Energy and Nuclear Physics, Division of High Energy Physics, of the U.S. Department of Energy under Contract No. DE-AC 03-76SF00098.

FEL Options for Power Beaming*

K.-J. Kim[1], A. A. Zholents[1],
M. S. Zolotorev[1], and N. A. Vinokurov[2]

[1]Lawrence Berkeley National Laboratory, One Cyclotron Road,
MS 71-259, Berkeley, CA 94720 USA
Fax No. 510-486-6485
e-mail: kwangje@lbl.gov
[2]Budker Institute of Nuclear Physics, 630090, Novosibirsk, Russia

October 1997

Abstract

We discuss critical issues in designing a FEL-accelerator system for power beaming application, and present several possible schemes.

* This work was supported by the Director, Office of Energy Research, Office of High Energy and Nuclear Physics, Division of High Energy Physics, of the U.S. Department of Energy under Contract No. DE-AC 03-76SF00098.

1. Introduction

The demand for the output power of communication satellites has been increasing exponentially. The satellite power is generated from solar panels which collect the sunlight and convert it to electrical power. The power per satellite is limited due to the limit in the practical size of the solar panel. One way to meet the power demand is to employ multiple satellites (up to 10) per the internationally agreed-upon "slot" in the geosynchronous earth orbit (GEO). However, this approach is very expensive due to the high cost of sending a satellite into a GEO orbit. An alternative approach is power beaming, i.e., to illuminate the solar panels with high power, highly-directed laser beams from earth [1]. The power beaming generates more power per satellite for the same area of the solar panel. The minimum optical beam power, interesting for power beaming application, is P_L=200 kW. The wavelength is chosen to be λ=0.84 μm, so that it is within one of the transmission windows of the air, and at the same time near the peak of the photo-voltaic conversion efficiency of Si, which is the commonly used material for the solar panels.

Free-electron lasers (FELs) are well suited for the power beaming application because they can provide high power with coherent wavefront, but without high energy density in media.

In this article we discuss some principal issues, such as a the choice of accelerator and electron gun, the choice of beam parameters (energy, emittance, peak and average currents etc.), radiation hazards, technological availability, and overall efficiency and reliability of the installation. We also attempt to highlight the compromise between the cost of the primary installation, the operation cost, and the choice of technology, and its maturity. We then present several schemes for the accelerator-FEL systems based on RF accelerators. The initial electron beam accelerator up to the energy of few MeV is more or less common for all these schemes.

2. Critical Issues of Power Beaming

Evidently, the size and cost of the accelerator and FEL decreases with the beam energy. A particularly attractive choice for the electron energy is below 10 MeV, which is below giant

resonance energy for most materials, thus allowing work in the radioactivity-free environment. Although λ=0.84 μm radiation can in principle be generated with such a low energy beam, using either Cerenkov, Smith-Purcell or transition radiation, these schemes seem not practical for a high power application because of the use of the medium. Two-stage FEL [2] appears the only promising option for a low-energy accelerator power beaming source, but its practical realization needs significant technological advances, for example, in a production of the intense and low emittance beams. We will return to this concept for a brief discussion in an appropriate place of this article.

A more robust approach is to use a magnetostatic undulator for beam radiation. If we take a realistic undulator with the undulator parameter K≥1, gap ≥0.5cm and period ≥1cm, then the electron beam energy should be ≥50 MeV. This energy is well above the energy of the giant resonance in most materials ($E^* \approx 12-18$ MeV) and, therefore, the deceleration of the electron beam below 10 MeV after the radiation is essential before it can be dumped. Additionally, any beam losses in the accelerator and FEL should be tightly controlled. This is especially challenging in the deceleration phase due to inevitable growth of the beam energy spread in the process of the radiation.

In order to get a sense about the level of acceptable losses, consider the following crude estimate of the induced radioactivity (activation):

$$\text{Radioactivity [Bq]} \approx \text{(losses)}\ \zeta \frac{P_e}{E^*}, \qquad (1)$$

where $\zeta \approx 2\text{x}10^{-2}$ is the ratio of the giant resonance cross section to the pair production cross section, and P_e is the electron beam power. Assuming the efficiency of power conversion from the electron beam to the light $\eta = P_L / P_e$=1% and P_L=200 kW, we find that the beam losses should be less than 10^{-5} to keep the level of the radioactivity acceptable for human maintenance (we assume a uniform loss deposition along 100 m of the accelerator and FEL). This requirement is similar to that in the high-power proton beam facilities [3].

The deceleration of the electrons after generating radiation makes an accelerator more complicated, but allows most of the electron beam energy to recuperate. This is important for the reasonable wall plug power efficiency of the entire facility.

There are a few options to consider when choosing the accelerator configuration: RF or electrostatic, room temperature or superconducting, and linac or racetrack microtron. With the beam energy 50-70 MeV, the RF linac should be superior to the electrostatic accelerator. Superconducting cavities have higher installation cost than room temperature ones, but much less operation cost. However, a reliable and robust operation of the superconducting linac in the high peak and average current environment is less certain than operation of the room temperature linac. The racetrack microtron could be a good compromise because it has a shorter linac and therefore smaller operation cost even with room temperature cavities. However, the fact that the linac needs to be operated with a higher average beam current, and the necessity of the beam transport between passes complicates beam dynamics. The energy acceptance of the accelerator is an important issue; there is a direct connection between efficiency of the FEL and the requirement of the energy acceptance of the accelerator. The higher efficiency leads to a bigger beam energy spread induced in the radiation process and, therefore, requires an accelerator with large energy acceptance. Therefore, a linac with one acceleration and one deceleration pass would be a better match to a high efficiency FEL.

When the efficiency η is small, it can be estimated as:

$$\eta^2 \approx \frac{2}{\gamma}\frac{I_p}{I_A} \tag{2}$$

where γ is the Lorenz factor, I_p is the peak current and $I_A \approx 17$kA is the Alfven current. It follows from (2) that I_p=200A is needed for 1% efficiency. The peak current must be achieved together with a small invariant beam emittance $\varepsilon_x \leq \gamma\frac{\lambda}{4\pi}$=7mm·mrad (we assume beam energy of 50 MeV). It is difficult to get such emittance from a thermionic cathode gun, especially with emittance dilution in the buncher. On the other hand, the recently developed RF photocathode gun [4], utilizing the emittance compensation technique [5], can provide the high current density

and short pulse with the required emittance. As for the choice of the photocathode, the existing semiconductor photocathodes, with more than 1% quantum efficiency, may not be a practical solution for a continuous robust operation in the environment of the high average beam current needed for power beaming. Metallic cathodes can provide robust operation, but with a low quantum efficiency (10^{-3} or less). In order to drive such a cathode, laser power of ~1 kW at ultraviolet frequency would be required. Currently such lasers are not available, but the necessary photon flux can be obtained by taking a fraction of the output photons of the power beaming FEL. The appropriate photon frequency can be produced either through harmonic generation in the FEL or in a crystal. To start up the operation, a conventional laser can be provided. The possibility of using synchrotron light from electrons to drive the photocathode was previously discussed in [6].

3. RF Accelerator–FEL Schemes for Power Beaming

We will now present several options for accelerator-FEL systems for power beaming of P_L=200 kW at wavelength λ=0.84 μm . The common features of the these options are an initial RF accelerator up to 5-8 MeV with the RF photocathode gun and a scheme for back-feeding a part of the output photon flux to drive the metal photocathode. The drive photon flux is either the direct FEL output at the 4th harmonic λ=0.21 μ or a portion of the fundamental output converted to the 4th harmonic by means of a crystal. Up to about 1 kW of laser power is necessary on the photocathode. With the photocathode radius ≤2 cm determined by the requirement of low beam emittance, a power density on the photocathode is ≤80 W/cm^2. This is a high but realistic number. A Ti:sapphire laser operating at 0.84 μ will be used for a start up of the system. It will produce ~30 ps and ~100 μJ pulse in the 4-th harmonic.

The initial accelerator should be based on low frequency cavities in order to keep beam instabilities and emittance dilution at a minimum. For the same reason special care should be taken for the suppression of high order modes (HOM) excited in the cavity by the beam. The RF cavity developed at LBNL for the PEP-II B-factory should meet the above requirements. This cavity operates at 476MHz, has a feedthrough that can withstand up to 500 kW of the RF power, provides the energy gain of 1 MeV per cavity, and withstands the power deposition on the walls up to 150 kW. It is also equipped with sophisticated high order mode suppressers [7]. Twenty-six such cavities were manufactured and installed in two rings of the B-factory, where they will eventually work at more than 2 A of the average current and more than 100 A of the peak current.

Another feature that also can be common for all power beaming installations is the possibility of operating FEL in the amplifier mode and eliminating an optical resonator. Indeed, with so much power available, a fraction of the FEL output can be taken back to the input of the FEL to provide energy modulation and microbunching of the next electron bunch. The start-up laser for the photocathode gun can also be used for a start up of the FEL. About 300 μJ in the laser pulse would be sufficient to ignite the radiation.

In view of the substantial role that a start-up laser plays in the power beaming schemes, the fact that a fraction of the output power will be used to keep the facility running, and the fact that the FEL is used in the regenerative amplifier mode, we have chosen to call the concept discussed in this paper the Ignited Feedback Regenerative Amplifier (IFRA) [8]. We now discuss a few IFRA scenarios.

3.1 IFRA High Energy Options

Here we consider two schemes illustrated by Fig. 1 and Fig. 2.

In the first scheme the RF gun produces electrons at 6 MeV, and the RF linac accelerates them up to 70 MeV, so that the FEL operates with a 70 MeV electron beam. After passing the FEL, the electrons are returned to the linac with a 180° phase shift, decelerated to an energy of

4.3 MeV, and then dumped. The main linac is of the same type as the injector linac and consists of 8 modules, each having 8 cavities powered by 1.2 MW klystron [9]. The length of the electron bunch from the injector is 1 cm. To generate 200 kW of optical power with $\eta = 1\%$, the electron beam peak current must be 200 A and the average current must be 0.3 A (0.6 A in the linac because of two beam passes). The undulator has a period length of 1.57 cm and a deflection parameter of K=1.4. The undulator consists of a relatively small number of periods, $N_u \leq 30$.

The scheme in Fig. 2 shows the microtron recirculator as the main accelerator instead of the long linac of the first scheme [10]. The microtron employs only two linac modules with an energy gain of 16 MeV per pass, and provides 64 MeV in four passes. The FEL part here is the same as in the previous scheme. Although the microtron linac carries a four times larger average current, it was shown that the beam motion can be made stable by the proper choice of the RF and beam transport parameters [11].

Both schemes can be more efficient in terms of the wall plug power if superconducting cavities are used in the main accelerator instead of in the room temperature cavities. However, the microtron recuperator in Fig. 2 receives less benefit.

So far we have dealt with the low efficiency of power conversion from the electron beam to the light. We did this intentionally, assuming that the low efficiency FELs allow easy handling of the radioactivity problem. However, it is known that a FEL with long tapered undulators can work with up to 40% efficiency [12] . Moreover, a technique is proposed [13] where high efficiency can be reached without a substantial effect on the beam energy spread. This technique is particularly well suited for the power-beaming FEL because it requires a strong electromagnetic field in the undulator co-propagating with the electron beam. In a case of power beaming, such a field can always be obtained by using a fraction of the output power. Therefore, we reserve a high efficiency option as the future upgrade from a low efficiency option, once the particle loss mechanisms are better understood. Then, with η=10%, 2 MW of optical power may be generated by the same electron beam current. Alternatively, the same 200 kW can be

generated, but with ten times less current and therefore at reduced radioactivity. In the latter case, the use of superconducting technology can be justified, since the average electron beam current is only 30 mA.

3.2 IFRA Low Energy Option

If the high energy option for power beaming cannot work because of the difficulty in solving the radioactivity problem, then the only option is to work with an electron energy below 10 MeV. The difficulty of the energy being too low for a 0.84 μm FEL with a magnetostatic undulator can be solved by using the two-stage FEL approach [2]. It is illustrated in Fig. 3, where the first stage FEL (referred to as the undulator FEL) generates 320 μ radiation, which is accumulated in an optical cavity with the quality factor Q≈100. The electromagnetic field in this cavity serves as an undulator for a 0.84 μ regenerative FEL amplifier (referred to as the signal FEL). Both FELs posses high efficiency up to 40%. There are two separate guns, one for the undulator FEL and one for the signal FEL. The gun for the undulator FEL could be thermionic since the emittance requirement is not stringent. The gun for the signal FEL must satisfy very tight emittance requirements of $\varepsilon_x \leq 0.7$ mm·mrad and at the same time provide 200 A of a peak current and 0.1 A of an average current. All these parameters together are not available with the present technology. Although, this scheme does not look viable now, it may become interesting in the future, with further development of the photocathode gun design and photocathode material. With potential for a compact configuration, the low energy IFRA could also serve interests of shipboard self-defense [14].

4. Conclusions

Several schemes for the kW class FEL system have been proposed recently: the regenerative amplifier FEL (RAFEL) by LANL [15], a system based on the superconducting RF accelerator with recirculation, by the Jefferson Laboratory [16], and a system based on Van de Graaf, by CREOL [17].

In this paper, we have discussed critical issues and several options for building a 200 kW power FEL for power beaming application. It is true that no FELs have been operated with such a high power level. However, the IFRA concept discussed in this paper appears to be quite realistic in solving the main difficulty in generating high brightness electron beams and efficient FEL interaction. All schemes discussed in this article have almost identical initial accelerators which we propose to build based on well-developed B-factory RF structures.

5. Acknowledgments

We acknowledge very useful and productive discussions with J. Corlett and R. Rimmer on RF structures, and with H. Bennett on power beaming.

References

[1] H. Bennett, SPIE Vol. 2988 (1997) 245; NIM A 341 (1994) 124.
[2] L.R. Elias, Phys. Rev. Lett. 42 (1979) 977.
[3] R.W. Garnett, et al., AIP Conf. Proc. 377, ed. S.Y. Lee (1995) 60.
[4] R.L. Sheffield, AIP Conf. Proc. 184, eds. M. Month and M. Dienes (1989) 1500.
[5] B.E. Carlsten, NIM A285 (1989) 313.
[6] G. Dattoli, L. Giannessi and L. Serafini, AIP Conf. Proc. 279, ed. J. Wurtele (1992) 675.
[7] R. A. Rimmer, NIM B99 (1995)717
[8] K.-J. Kim, A. Zholents, M. Zolotorev, CBP Note-239 (1997).
[9] R. Rimmer, Private communication.
[10] N. G. Gavrilov, et al., SPIE 2988 (1997) 185.
[11] N. A. Vinokurov, et al., SPIE 2988 (1997) 221.
[12] T. Orzechowski, et al., PRL 57 (1986) 2172.
[13] N.M. Kroll, P.L. Morton, M.N. Rosenbluth, IEEE Journ. of Quantum Electronics, Vol. QE-17, No. 8 (1981) 1436.
[14] A.M. Todd, W.B. Colson, G. R. Neil, SPIE 2988 (1997)176; J.R Cook, J.R. Albertine, SPIE 2988 (1997) 264.
[15] R.L. Sheffield, D.C. Nguyen, J.C. Goldstein, SPIE 2988 (1997) 28.
[16] M.D. Shinn, SPIE 2988 (1997) 170.
[17] I.K. Kimel, L.R. Elias, NIM A358 (1995) 186.

Figure Captions

Fig. 1. Ignited Feedback Regenerative Amplifier (IFRA)–high energy option. See the text for discussion.

Fig. 2. Microtron Recirculator scheme.

Fig. 3 IFRA–Low Energy Option employing 10 MeV electron beam to avoid the radiation hazard and using two-stage FELs.

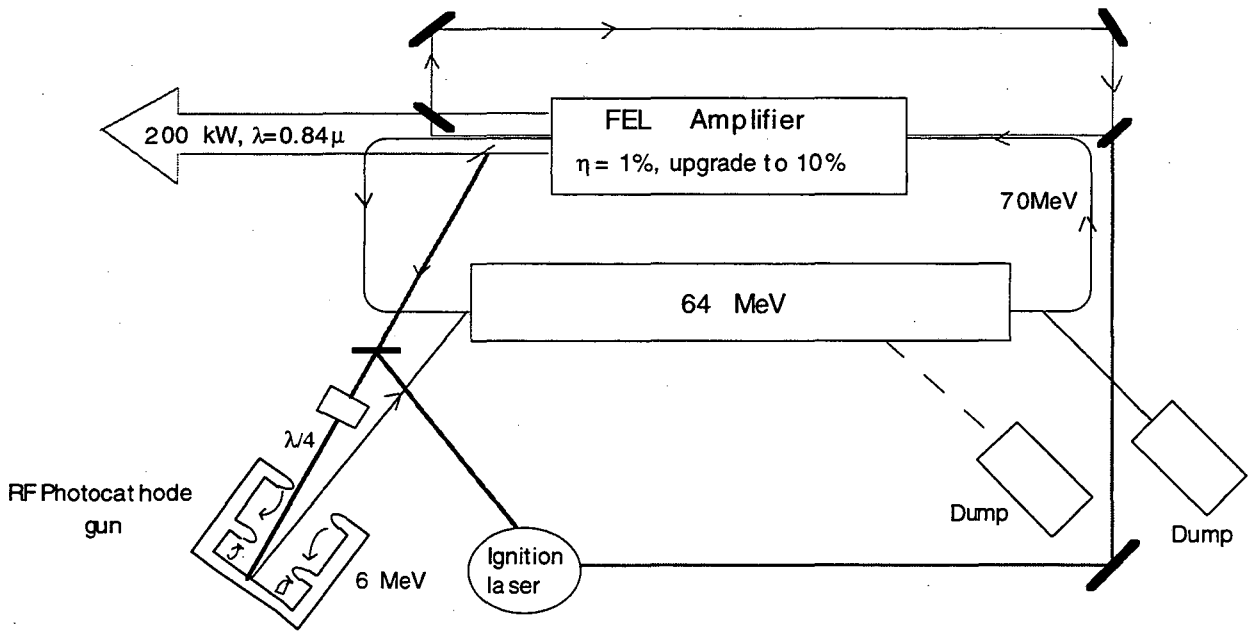
200 kW, λ=0.84μ
FEL Amplifier
η = 1%, upgrade to 10%
70MeV
64 MeV
λ/4
RF Photocathode gun
6 MeV
Ignition laser
Dump
Dump

Figure 1

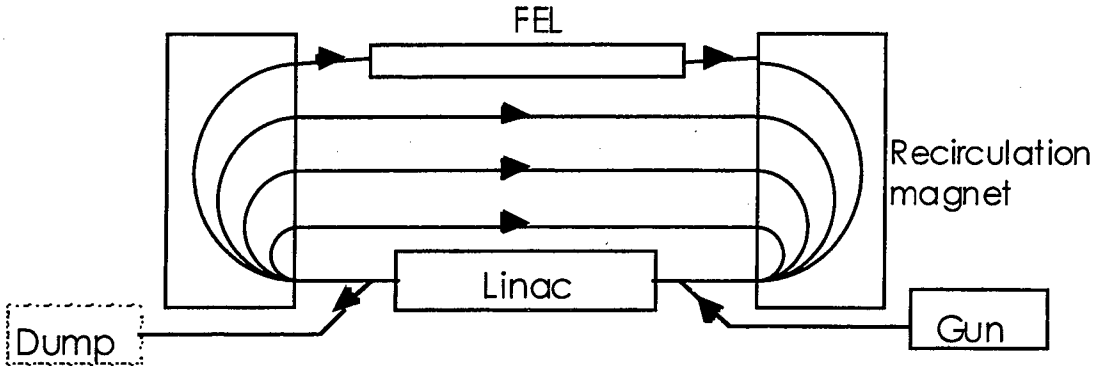

Figure 2

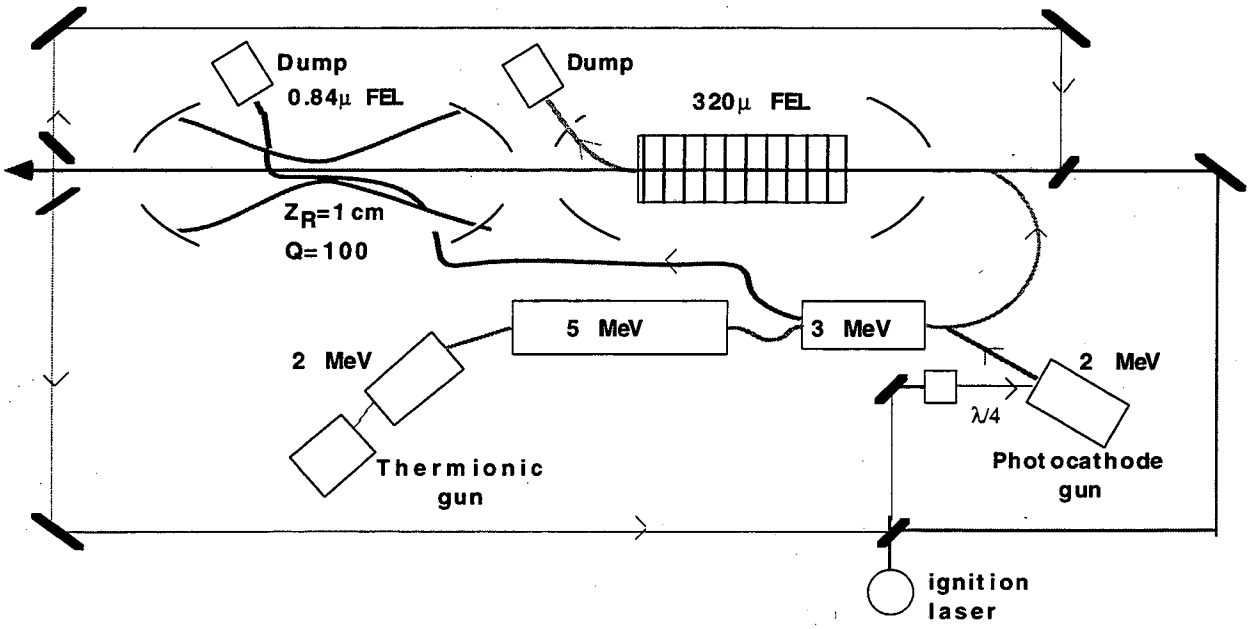

Figure 3

Ernest Orlando Lawrence Berkeley National Laboratory
One Cyclotron Road | Berkeley, California 94720

Prepared for the U.S. Department of Energy under Contract No. DE-AC03-76SF00098