LBNL-40903
UC-1600
Preprint

ERNEST ORLANDO LAWRENCE BERKELEY NATIONAL LABORATORY

Despite Different Wall Colors, Vertical Scotopic Illuminance Predicts Pupil Size

S.M. Berman, D.L. Jewett,
B.R. Benson, and T.M. Law

Environmental Energy Technologies Division

November 1996

Submitted to
Journal of the Illuminating Engineering Society, 26 (No. 2)

REFERENCE COPY
Does Not
Circulate

Bldg. 50 Library - Ref.
Lawrence Berkeley National Laboratory

Copy 1

LBNL-40903

DISCLAIMER

This document was prepared as an account of work sponsored by the United States Government. While this document is believed to contain correct information, neither the United States Government nor any agency thereof, nor the Regents of the University of California, nor any of their employees, makes any warranty, express or implied, or assumes any legal responsibility for the accuracy, completeness, or usefulness of any information, apparatus, product, or process disclosed, or represents that its use would not infringe privately owned rights. Reference herein to any specific commercial product, process, or service by its trade name, trademark, manufacturer, or otherwise, does not necessarily constitute or imply its endorsement, recommendation, or favoring by the United States Government or any agency thereof, or the Regents of the University of California. The views and opinions of authors expressed herein do not necessarily state or reflect those of the United States Government or any agency thereof or the Regents of the University of California.

LBNL-40903 Preprint
L-209

JIES 26 (No. 2) 1997

Despite Different Wall Colors, Vertical Scotopic Illuminance Predicts Pupil Size

S. M. Berman, D. L. Jewett,[1] B. R. Benson,[1] T. M. Law[1]

Building Technologies Program
Environmental Energy Technologies Division
Ernest Orlando Lawrence Berkeley National Laboratory
University of California
Berkeley CA 94720

[1]Abratech Corporation
475 Gate 5 Rd., Suite 255
Sausalito CA 94965

November 1996

This work was supported by the Assistant Secretary for Energy Efficiency and Renewable Energy, Office of Building Technology, State and Community Programs, Office of Building Equipment of the U.S. Department of Energy under Contract No. DE-AC03-76SF00098.

Abstract

Previously we have determined, with a full field of view, the relative contributions of scotopic and photopic luminance to pupil size at light levels typical of building interiors. Those studies were carried out in a white room with uniform reflectance, and with the viewed surfaces having an approximately uniform luminance distribution. To enhance the usefulness of the past results to lighting practice, we have constructed a simulated office where the viewed walls can have one of four very different colors, with quite different luminance distributions. This allows examination of interaction effects between wall spectral reflectivity and light source spectral distribution.

In the present study pupil sizes were obtained while subjects were viewing a very small screen television. A remote pupillometer was used, allowing subjects to sit in a comfortable chair without the inconvenience of chin rests or head gear. Seventeen subjects between the ages of 27 and 47 years were studied using illumination provided by conventional lamps, either a WW or a daylight fluorescent lamp. Pupil size variation was predicted by the value of the scotopic vertical illuminance at the eye. Even though the WW lamps are 50% more efficacious than daylight lamps in terms of photopic lumens per watt, daylight lamps can be as much as twice as efficacious in eliciting pupil size.

Introduction

Illumination recommendations for building interiors[1] are often based on criteria such as visual performance, brightness perception, and visual comfort, but not upon spectral power distribution (except as related to the color rendition index[2]). However, because of the visual consequences of scotopic sensitivity, illumination specifications that neglect spectral effects may be less than optimum in terms of vision and/or brightness perception.[3] We have previously shown that the spectral response of pupil size is predominantly a scotopic sensitivity.[4] We have also demonstrated that brightness perception, although not dominated by scotopic spectrum, has a prominent contribution dependent on the scotopic content of the illumination.[5] These effects are manifested when the lit environment is viewed in full visual field, the typical viewing conditions for occupants of building interiors. Conversely these effects are not observed if the visual field is confined to small angles, which is the procedure used in the determination of the photopic $V(\lambda)$ function. Since the $V(\lambda)$ function is the basis of calibration of photometers and light meters, scotopic sensitivity is not a part of a general lighting practice which relies on illuminance measures.

In our previous study on pupil size,[4] we measured the effect of light spectrum for young adult subjects (ages 20 to 40 years) in conditions of almost full field of view and luminances typical of interior lighting conditions. The previous study differed from the study reported here in several ways, so we here describe the conditions of the previous study. The room had spectrally flat white walls, and an unpainted natural wooden floor. The infrared pupillometer partially obstructed about 1 steradian of the total full field of view (2π sr). Either a small fixation spot located on the front wall or a small low luminance TV was viewed by the seated subjects, who leaned slightly forward while placing their heads on a chin rest.

Employing a wide variety of fluorescent lamps of different spectra, we established that photopic and scotopic spectrum combined in a particular manner to provide the pupillary spectral response

when the luminance range was restricted to lie between 20 cd/m^2 and 300 cd/m^2. The spectral response was determined by expressing the data for the average pupil area (A) in the form

$$\log A = c - a(\log S) - b(\log P) = c - (a+b) \log [P (S/P)^{a/a+b}]$$

where S and P were the scotopic and photopic luminances of a control area on the front viewed wall and a,b,c are constants fitted to the data. The quantity P (S/P)a/a+b we refer to as pupil luminance. The exponent (a/a+b) was empirically determined from our data to have the value 0.78 when viewing the fixation spot and approximately the value 1.0 for the condition of TV viewing.

We have previously demonstrated in several studies[6,7,8] that visual acuity and contrast sensitivity of normally sighted subjects at typical interior light levels are determined by pupil size and not by retinal photopic illuminance. Thus, the efficacy of lighting to influence visual performance is best evaluated by pupillary illuminance rather than by strictly photopic quantities.

We now extend our findings to a more realistic, colored environment, using standard commercially available lamps, measuring pupil size remotely, keeping equal the photopic vertical illuminance at the subject's eye. In addition, we have also measured the power consumed by the ballasts for the various conditions of lamp type and wall color, thereby determining the effective pupillary efficiency for a lamp combined with a wall color.

Methods

Subjects

All procedures were approved by the Human Use Committee at the University of California, Berkeley. Twelve female and five male subjects, who responded to local newspaper advertisements and college postings were studied. They ranged in age from 23 to 47 years, with a median age of 34. Fourteen of the subjects did not use spectacles or contact lenses, while three wore contact lenses or glasses and were tested while wearing their corrections. All subjects were determined to have Snellen acuity of better than 20/30, as tested. Prior to testing, subjects were screened by questionnaire regarding unusual sensitivity to light, and for pupils unresponsive to added peripheral light. No subjects were excluded from the study.

Pupil Size Recording

An ASL Model 4250R remote Eyetracker/Pupillometer[9] was used to measure subjects' pupil size under the conditions of the experiment. The instrument measures pupil diameter (horizontally across the pupil), at a sampling rate of 60 Hz. The ASL E4000(V.4.8620B) software package was used to control the pupillometer and send pupil diameter and point of gaze information to a master computer. The master computer used software written by Abratech Corporation to remove blinks from the raw data. Both the raw data and processed data were saved in data files.

Surround Lighting

The study took place in a rectangular room with an 2.4m X 3.6m (8' x12') floor area, and a ceiling height of 2.8 m (9' 3"). A specially designed lamp fixture containing twenty-four fluorescent lamps (F40T12) controlled in pairs by twelve high-frequency, solid-state dimmable Lutron ballasts provided lighting for the room. The lamps were mounted horizontally at a 45

degree angle from the wall, above and behind the subject (see **Figure 1**). The subject was seated such that illumination on the viewing surface came directly from the lamps, with no direct light rays from the lamp fixture being seen. The output of the lamps was controlled by computer.

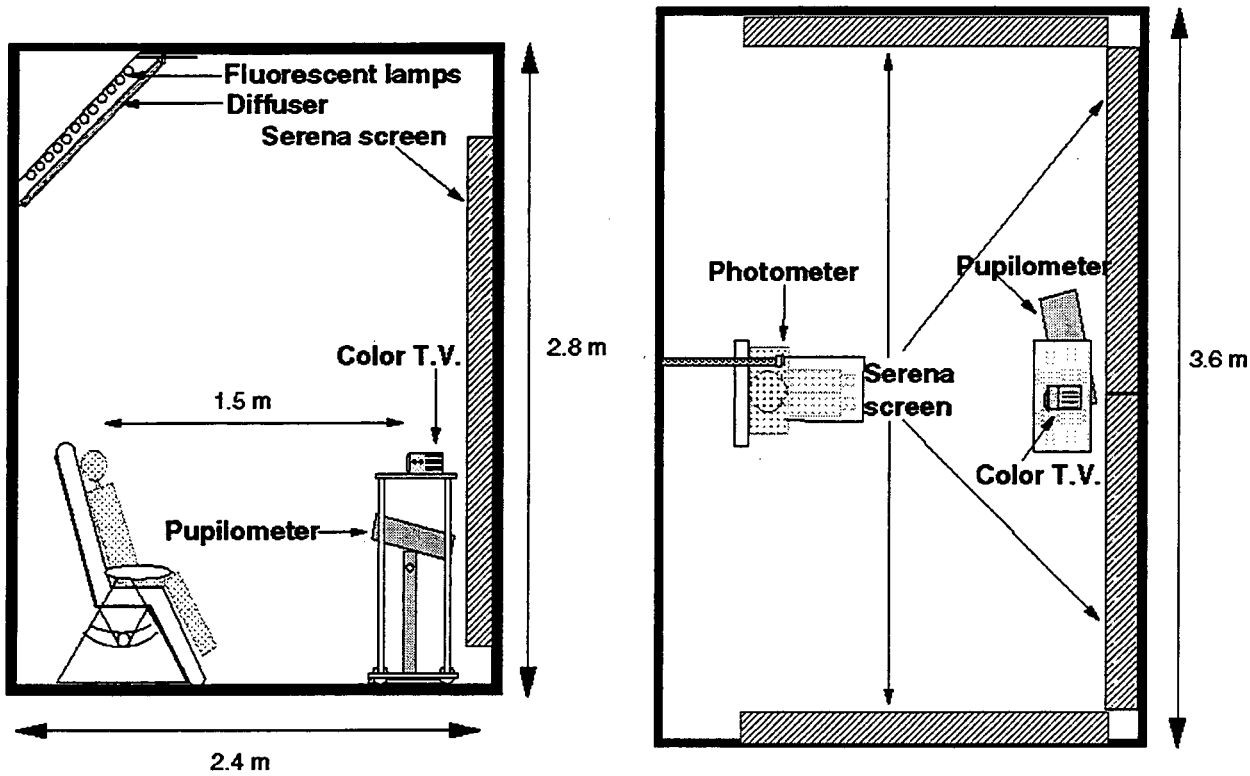

Figure 1. Drawing of the simulated office showing subject position, fluorescent lamps, diffuser, Serena Screens, color television, ASL pupilometer, and LMT photometer head. (not to scale)

The lamps were chosen because of commercial availability and significant scotopic difference in spectra: a scotopically rich daylight lamp (General Electric Chroma 75) and a scotopically deficient lamp (General Electric Warm White). The correlated color temperatures (CCT) were 7500 K and 3000 K respectively. The scotopic to photopic ratio of the lamp spectra, as measured directly with a Pritchard 1980B scanning photometer was S/P = 2.40 for the Chroma 75 and S/P = 0.97 for the Warm White lamp.

The vertical photopic illuminance and scotopic illuminance at the level of the subject's eye directly under the bank of fluorescent lamps was measured with an LMT B510 photometer, which has both a photopic and scotopic head. The study was conducted at two nominal vertical illuminances of 64 and 108 photopic lx (6.0 and 10.0 fc) for each of the two lamp types. Because of lamp thermal effects, the actual vertical illuminances differed slightly during the course of the study; actual

values were used in the data analysis and in the figures. Each of the illuminant conditions were studied with each of four different colored walls.

Visual Field

The four different color panels of the vertical walls surrounding the subject were controlled by motor driven Lutron Serena screens,[10] allowing for changes from one wall color presentation to another in about fifteen seconds. Three meters of the front wall as viewed by the subjects were covered by two 1.5 m wide by 2.1m high screens, while the side walls each had a 1.5 m by 1.8 m unit (**Figure 1**). Three colors and an open setting (exposing the white walls behind the screens) were chosen to give markedly different spectral reflectances. The colors were sky blue, sand, and a reddish brown referred to as ghurka. The various wall spectra (measured directly above the TV) under the different illuminants, for the condition of equal photopic vertical illuminance at the subject's eye, are shown in **Figures 2 and 3**. **Table 1** lists the values of the S/P ratio obtained by measuring the illuminances at the eye with the LMT illuminance meter for the two lamp types and the four walls. We note that although the wall colors affected changes in the S/P ratio from the nominal pure lamp value, the percentage change in S/P for the two lamps was about the same when comparing each wall color.

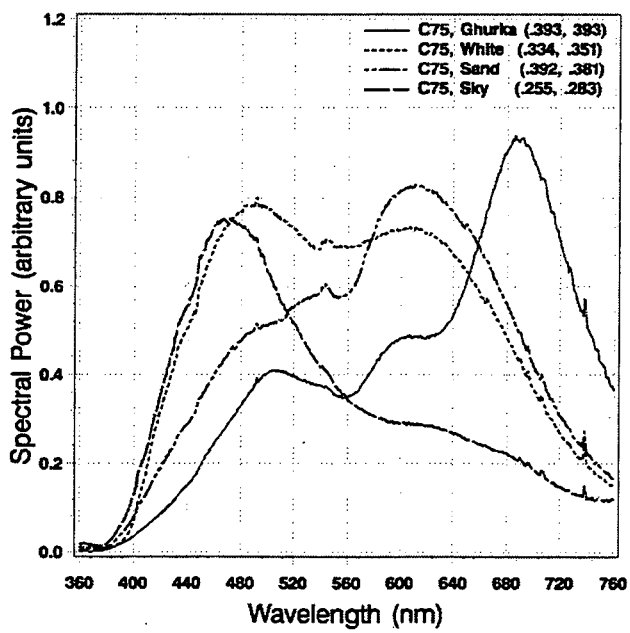

Figure 2. Wall spectral power distribution for the C75 lamp and four wall surfaces. The chromaticity coordinates for a ten degree standard observer are also given.

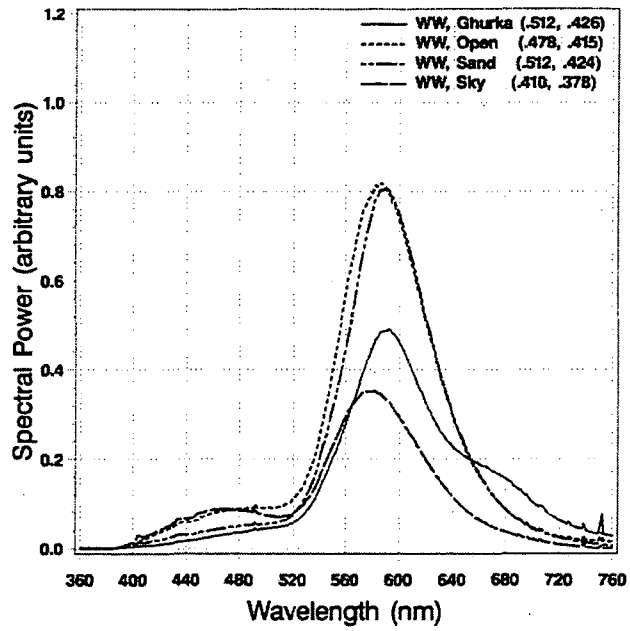

Figure 3. Wall spectral power distribution for the WW lamp and four wall surfaces. The chromaticity coordinates for a ten degree standard observer are also given.

Table 1. The S/P ratio for the four walls when illuminated by either GE Warm White or Chroma 75. The S/P for the two lamp types were 0.97 and 2.40 for the Warm White and Chroma 75 respectively.

Condition		Photopic Vertical Illuminance per Watt (lx/W)	S/P Ratio	Watts per Scotopic Vertical Lux (W/lx)
Lamp	Wall			
C75	White	1.13	2.25	0.394
C75	Sand	0.750	1.90	0.702
C75	Sky	0.449	2.68	0.831
C75	Ghurka	0.579	2.08	0.830
WW	White	1.71	0.91	0.642
WW	Sand	1.18	0.87	0.977
WW	Sky	0.622	1.05	1.53
WW	Ghurka	0.688	0.84	1.73

The subject faced the long wall of the chamber and viewed a color television with a 11.4 cm by 7.6 cm screen. The screen subtended a horizontal angle of four degrees and a vertical angle of three degrees. With the room lights off the TV produced a vertical photopic illuminance at the eye ranging from 0.22 lx to 0.32 lx. The luminance of the TV as viewed from the eye position with the movie showing and the room lights on ranged from 35 cd/m^2 to 220 cd/m^2 while the luminance of the wall just to the right of the TV ranged from 15 cd/m^2 to 56 cd/m^2 with the lower values associated with ghurka and sky walls when the veritcal illuminance at the eye was set at 64 lx and the higher values with the white and sand walls when the vertical illumances was set at 108 lx.

Testing Procedure

The subject had a variety of bland (non-emotional) movies to choose from. Subjects were seated in a comfortable chair in the experimental chamber and familiarized with the equipment. The remote pupillometer focus and eyetrack positioning were then adjusted and calibrated. A head-mounted earphone/microphone intercom system was used to communicate between the subject inside the chamber and the researcher outside.

During each condition, the lighting levels were adjusted and then the subject was given a minimum of two minutes to adapt to changes in the surround lighting and Serena screens. After the adaptation time, pupil diameter data was recorded for thirty seconds.

Presentation Sequence

Sixteen conditions were tested, each condition consisting of a lamp type (Warm White or Chroma 75), a light level (64 or 108 lx of vertical illuminance at the eye), and a wall color (white, sky, sand, or ghurka). A subject was presented with three sets of conditions, each set being a random order of the sixteen conditions (a grand total of 48 conditions for each subject). Because of fluctuation in lights output with lamp temperature, the light level was adjusted within a tolerance of a few lux at the start of each condition.

Subjects were permitted a rest period on request to minimize subject fatigue/boredom. A testing session for a subject lasted about three hours.

Data Analysis

Prior to statistical analysis, for each subject an average value of log pupil area was determined for a particular condition by averaging over the 30 second data gathering period. A repeated measures Analysis of Covarance (ANCOVA) was then applied where the repeated measures were trials (3), lamp type (2), walls (4), lamp level (high, low). The natural log (ln) photopic and ln scotopic values of vertical illuminance were treated as covariates. We used the BMDP-5V statistical analysis program.[11] No attempt was made to include higher order powers of the log vertical illuminances since their range was limited, i.e., from about 64 to 108 photopic lx or 50 to 287 scotopic lx.

Results

Based on our previous study of the spectral response of the pupil where subjects watched a small television, we expected that log pupil area should be linearly related to the log scotopic illuminance. This was confirmed by these experiments, as shown in **Figure 4** which plots the mean pupil area

for each of the 16 conditions. The pattern displayed is quite linear and in reasonable agreement with our previous study. The ANCOVA procedure based on the hypothesis that

$$\ln A = a - b(\ln S) - c(\ln P)$$

where A is pupil area and a,b,c are fitted constants yielded the result a = 4.32 (+- 0.11 s.e.), p<0.0000 and b = 0.33 (+- 0.01 s.e.), p < 0.0000 and c = 0.02 (+- 0.02 s.e.), (p = 0.38). The Wald test of significance of the covariates yielded for the scotopic covariate ($\chi 2$ [1 DF] = 814, p<0.000) and for the photopic covariate ($\chi 2$ [1 DF] = 0.78, p = 0.38). This analysis shows a trend in the photopic component that is not statistically significant. Establishing the statistical significance of such a small photopic component would require a much larger subject sample. In the model where both log scotopic illuminance and log photopic illuminance were the covariates, the ANCOVA procedure was also used to investigate possible additional interaction terms between scotopic illuminance and lamp type as well as photopic illuminance and lamp type. These possible interaction effects were both evaluated as not significant (p = 0.4 and 0.6 respectively) and hence these covariates were adequate. While the scotopic illuminance explains the pupil areas observed (**Figure 4**), the photopic illuminance alone is a much poorer predictor of pupil size (**Figure 5**). The data plotted in **Figures 4 and 5** is listed in **Table 2**. With scotopic illuminance as the sole covariate, the data of **Figure 4** is fit with the equation

$$\ln A = 4.24 - 0.33 \ln S$$

with S in units of scotopic lux and A in units of square millimeters.

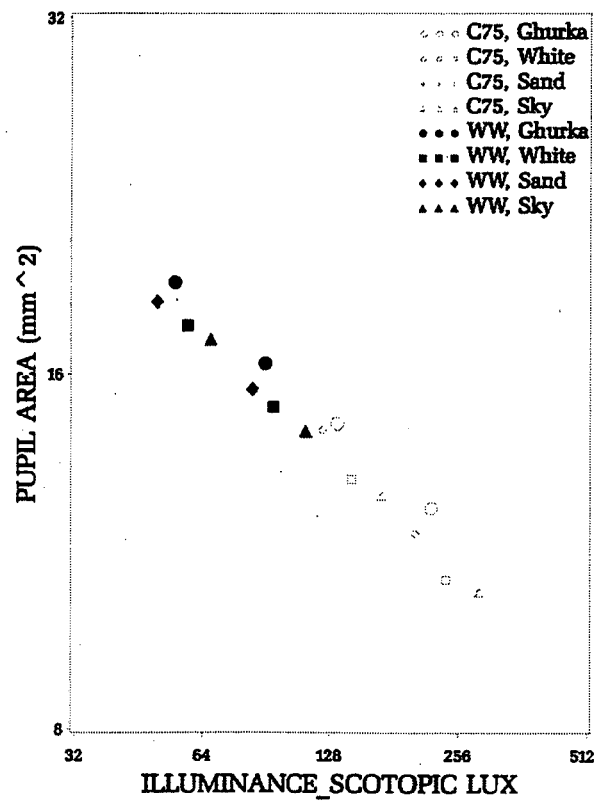

Figure 4. Graph of mean pupil area for the 17 subject vs. the mean vertical scotopic illuminance as measured at subject eye level. The 16 data values are the results for the two lamp types, four wall colors and two levels of vertical photopic illuminance at the subject's eye. The mean pupil area was calculated from the average of the log pupil area.

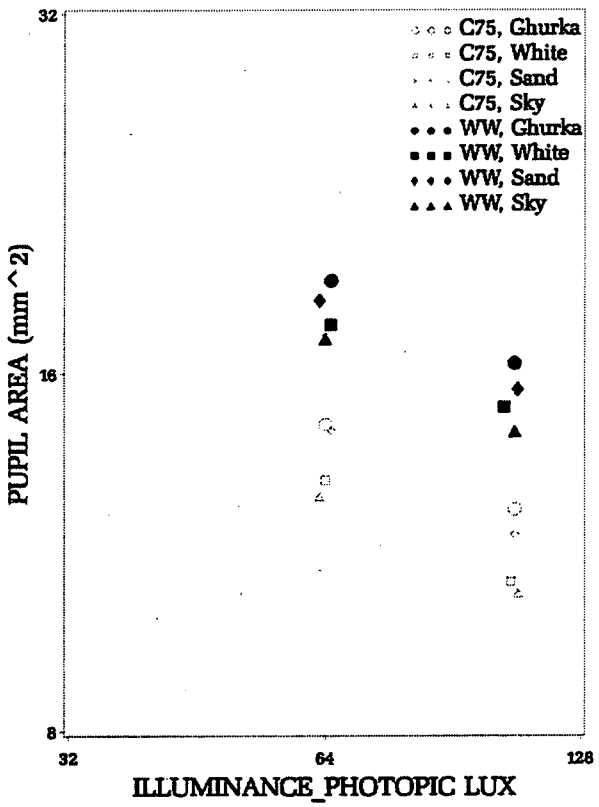

Figure 5. Graph of mean pupil area for the 17 subject samples vs. the mean vertical photopic illuminance as measured at subject eye level. The 16 data values are the results for the two lamp types, four wall colors and two levels of vertical photopic illuminance at the subject's eye. The mean pupil area was derived from the average of the log pupil area. The slightly different values of photopic illuminance at the nominal 64 or 108 lx occurred due to lamp thermal effects (see text).

Table 2. The mean pupil area, scotopic illuminance, and photopic illuminance data for Figures 4 and 5.

Lamp Type	Serena Screen Color	Average Pupil Area (mm^2)	Scotopic Illuminance (lux)	Photopic Illuminance (lux)
	white	13.01	144	64
	sky	12.61	169	63
	sand	14.32	123	65
Chroma-75	ghurka	14.50	133	64
	white	10.69	239	106
	sky	10.44	287	108
	sand	11.70	203	107
	ghurka	12.30	221	107

(Continued)

Table 2 (Continued)

Lamp Type	Serena Screen Color	Average Pupil Area (mm^2)	Scotopic Illuminance (lux)	Photopic Illuminance (lux)
	white	17.58	59	65
	sky	17.11	67	64
	sand	18.41	50	63
Warm-White	ghurka	19.13	55	65
	white	14.99	94	104
	sky	14.29	112	107
	sand	15.52	84	108
	ghurka	16.32	90	107

Pupil Efficacy

Figure 6 is a plot of the mean pupil area for the seventeen subjects as a function of lamp power for the eight conditions. Lamp power for the eight lamp system was determined by measuring the light output when either the WW or C75 lamps were operated at full ballast power. To account for possible ballast losses due to operation at less than 100% output from affecting the results, the power for a given condition was determined by prorating the 100% power by the ratio of illuminance at the test condition to the illuminance at full power. From **Figure 6**, where the line joining the data points are for a given wall color, it can be seen that in the regions of overlapping power, the C75 lamps produce much smaller pupils for all wall colors even though in terms of photopic lumens per watt the WW is 50% more efficacious. From the last column of **Table 1**, it can also be seen that the power requirement to achieve a given level of scotopic illuminance is much greater for the WW lamp than for the C75 lamp varying between 39% more for the sand walls to 108% more for the ghurka walls.

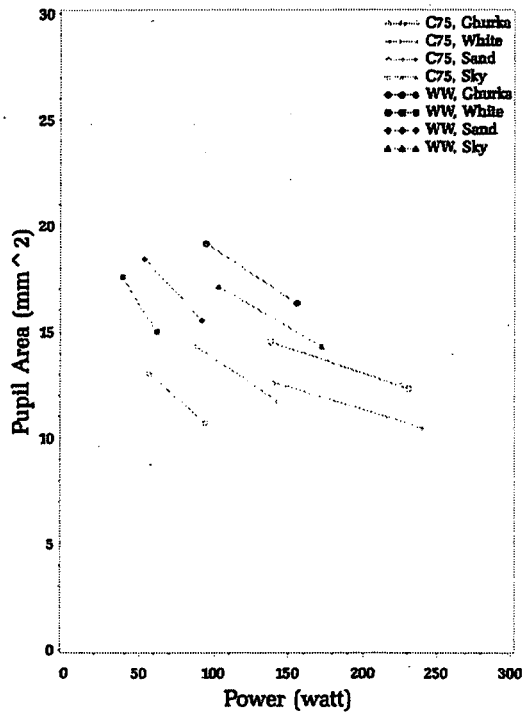

Figure 6. Graph of mean pupil area for the 17 subject sample vs. the power consumption. Ballast power and efficiency have been accounted for in the values of lamp power use (see text).

The importance of wall color on achieving a given pupil size is also very evident in the data shown in **Figure 6**. White walls are clearly more efficacious in producing smaller pupils for both lamp types. For example, roughly the same average pupil size is achieved with the sand colored wall as the white wall, but the sand colored wall requires more than 25% more lamp power.

Note added after submission of manuscript:

The data plotted in **Figure 4**. shows values under the ghurka condition that appear to be systematically shifted by an amount which could be due to an error of 20% in the measured scotopic illuminance. We remeasured the ghurka S/P ratios, comparing the LMT photometer with the Pritchard 1980B scanning spectrophotometer and found the difference between the two meters was small and in the opposite direction from that which could account for this effect.

Discussion

In this study the spectrum of light seen by the subjects was mostly a combination of lamp spectral power distribution and wall spectral reflectivity as is typical in building interiors. Although the television alone produced an extremely small level of illuminance (less than 0.32 lx), its luminance as viewed by the subject in the presence of the test lighting was generally slightly larger than the luminance of points on the front wall just to the side of the television.

The fact that the spectral distribution of light from the television was unspecified meant that there was a confound in the data that we did not control for. However the vertical illuminance at the subject's eye from the television in the presence of the test lighting was never more than 1% of the specified values of 64 or 108 lx. Thus we expect this confound to add variability to the data but not to effect the general trend. Because we did not control for the illuminance of the television, which was the principal contributor to the foveal light, we were unable to determine any possible small contribution of photopic illuminance to pupil size. Because the four different wall colors range between bluish at one end and reddish brown at the other, a single lamp type set for a particular value of photopic illuminance provided four different scotopic illuminances at the subjects' eyes. The values of vertical illuminances chosen are in the range of photopic illuminances at the plane of the eye in typical office conditions.[12] The size of the viewed television, subtending a visual angle of 3 degrees x 4 degrees is a lower limit when compared to various self illuminating equipment such as VDTs, computer terminals, portable television's etc. that might be providing visual tasks. For these conditions our study clearly demonstrates that pupil size is controlled by the scotopic spectrum present at the viewers eyes.

In addition we have determined that log pupil area is linearly dependent on log scotopic illuminance where the illuminance is evaluated in the plane of the viewers eye. In our previous study where the subject test room had white walls, we found a similar functional behavior of log pupil area but instead as a function of the log scotopic "luminance" of the wall at a point just beyond the television. If the room luminance distributions were similar for each of the four wall colors, and if the vertical illuminance at the eye is roughly proportional to the forward luminance, then the relationship found in the present study would be expected from our previous study.[4] However, measurements of luminance at fixed vertical photopic illuminance and various points on the walls as well as the viewed portion of the ceiling showed large differences depending on the wall color. For the sky colored wall the forward luminance was about one half that of the white wall while the

ceiling luminance was more than twice as much for the sky wall compared to the white wall. Similar variations and differences also occurred for the sand and ghurka walls. Because of these very different luminance distributions and the good fit of our present pupil size data, we can conclude that it is the vertical scotopic illuminance at the eye which is the controlling independent variable. The slope obtained here of 0.33 +/- 0.01 with illuminance as the independent variable agrees well with the slope of 0.33 +/- 0.16 obtained in the previous study with luminance as the independent variable. The similar slopes for two different independent variables is probably due to the fact that in the prior study with nearly uniformly illuminated white walls, the vertical illuminance at the eye was proportional to the forward wall luminance.

Our results measuring lamp power and pupil size indicate that photopic luminous efficacy is an inadequate metric by which to judge the efficacy of indoor illumination. The C75 lamp has a photopic luminous efficacy only 62% that of WW, so the C75 requires 1.6 times as much lamp power to achieve equal photopic luminance. Yet, if the metric for indoor lighting is visual function given by pupil size, the C75 has equal visual efficacy compared to the WW lamp with about two-thirds of the lamp power. With such a large difference (a factor of 2.5), the choice of metric should be based upon a thorough review of the lighting goals of any particular lighting design.

Acknowledgment

This work was supported by the Assistant Secretary for Energy Efficiency and Renewable Energy, Office of Building Technology, State and Community Programs, Office of Building Equipment of the U.S. Department of Energy under Contract No. DE-AC03-76SF00098.

References

1. Reports of ANSI/IESNA RP-1-1993 Office Lighting; ANSI/IESNA RP-7-1983 Industrial Lighting, New York: IESNA.

2. Energy Policy Act of 1992; P.L. #102-486, Oct. 24, 1992; Section 123 E/C requirements for certain lamps and plumbing products. USGPO; 1993, 343, 169, 80121.

3. Berman, S.M. 1992. Energy efficiency consequences of scotopic sensitivity. JIES 21(1):3-14.

4. Berman, S.M. 1992. Spectral determinants of steady-state pupil size with full field of view. JIES 21(2):3-13.

5. Berman, S.M.; Jewett, D.L.; Fein, G.; Saika, G.; and Ashford, F. 1990. Photopic luminance does not always predict perceived room brightness. Lighting Research Technology 22(1):37-41.

6. Berman, S.M.; Fein, G.; Jewett, D.L.; and Ashford, F. 1993. Luminance controlled pupil size affects Landolt C test performance. JIES 22(2):150-165.

7. Berman, S.M.; Fein, G.; Jewett, D.L.; Benson, B.R.; Law, T.M.; and Myers, A.W. 1996. Lighting spectral effect on Landolt C performance is enhanced by blur and abolished by mydriasis. JIES 25(1):42-50.

8. Berman, S.M.; Fein, G.; Jewett, D.L.; and Ashford, F. 1994. Landolt C recognition in elderly subjects is affected by scotopic intensity of surround illuminants. JIES 23(2):123-130.

9. Applied Science Labs, Waltham, Mass.

10. Lutron Electronics, Inc. Coopersburg, PA.

11. Dickson, W.J. (Ed). 1992. BMPD - Statistical Software Manual. Berkeley, California: University of California Press.

12. Sanders, P.A; Collins, B.L. 1995. Post Occupancy Evaluation of the Forrestal Building. NIST Report, In Press JIES.

DISCUSSION

This research appears to be the usual, carefully conducted work that we have come to expect from these authors regarding research into scotopic spectrum effects on pupil size. Our collective understanding of how to influence brightness perception through pupil response has been further enhanced with this work. There are some important implications for future designs and specifications of lighting systems.

The selection of lamp types and wall colors showed the general trend in the influences of lamp color and wall color on pupil size, as well their combined effect on photopic vs. scotopic luminous efficacy, a new and important concept. The obvious next step, from a standpoint of making the information applicable in design, is to provide some kind of working reference— perhaps a table— that a specifier could refer to in choosing combinations of lamps and interior surface colors. Warm White and C75 are at opposite ends of the fluorescent color temperature spectrum and P/S ratios, which made them good for the experiment. But they aren't used much in specifications; they are not often found to be aesthetically acceptable. But what would be the luminous efficacy of the 80CRI/4100K lamps, for example? The 7OCRI/3500K lamps? Are there differences in luminous efficacy between different manufacturers' versions of these commonly used lamps?

What we really need is a scotopically rich lamp that isn't as blue in appearance as many of the ones used in the research so far. In my experience, most people find even the C50 lamp to be too blue.

Good solid findings, but designers always want more.

Finally, I am curious as to how scotopic illuminance is measured. Perhaps it was described in an earlier paper; I don't recall.

Dawn De Grazio
United Electric Co., New Brighton, MN

The authors are to be commended for their careful research into the lighting parameters that affect pupil size. The present study has assessed the effects of not only lamp spectrum but also wall color—in other words, the entire visible scene on pupil size. The paper demonstrates clearly that warm white light combined with warm wall colors requires the greatest amount of wattage to produce relatively equivalent pupil sizes as a cool white lamp combined with white wall surfaces. The authors indicate that these findings reinforce the need to consider both photopic and scotopic illuminance when specifying desired light output of particular lamps for specific tasks. Have the

authors considered ways of correcting the current V(λ) function to account for this effect—will the term 'scotopic' lux gain credence? Have they considered use of retinal luminance, rather than illuminance as a more effective metric to account for pupil size and amount of illuminance delivered to the visual receptors—or do they believe that the aberration of the lens is the critical factor responsible for visual performance at these illuminance levels? Would they care to speculate on the role of scotopic illuminance in lighting design particularly at illuminances (albeit photopically specified) above 108 photopic lux? Finally, do they plan more research to assess whether specifying illuminance in scotopic terms results in better, more accurate predictions of task performance as a function of illuminance?

B. L. Collins
NIST

The authors present data which, in addition to their earlier work[a-c] and that of others[d,e] convincingly demonstrate the effects of light spectrum on pupil size. But the practical implications of this research are unclear. The authors assert that "Visual acuity and contrast sensitivity of normally sighted subjects at typical interior light levels are determined by pupil size and not by retinal photopic illuminance." However, the authors have not controlled pupil size in any of their studies, and many researchers have demonstrated that pupil size has an insignificant effect on visual acuity under the conditions the authors describe.[f-i] Furthermore, several of the same authors have acknowledged no direct correlation between the amount of change in individual subject's pupil size and the amount of contrast threshold change.[j] Such contradictions in the literature, and by the authors themselves lend doubt to their assertion.

Even if this assertion were true, its application is limited. The authors have shown visual acuity improvements with scotopically-rich light; but visual acuity targets are by definition near visual threshold, while most visual tasks in workplaces such as offices are well above the visual threshold.[k] The authors present no convincing reason to expect visual performance for such tasks to be significantly improved under scotopically-rich light, even if visual acuity improves. They themselves have previously stated "that differences in contrast sensitivity threshold make no difference on high contrast tasks, such as reading normal-sized text. ..."[j] Are future studies to disprove this statement envisioned?

Still, individual cases of near-threshold visual tasks can be imagined: persons with visual disability, or medical examinations and procedures. For such situations, scotopically-rich light should present visual performance advantages, but so may other approaches, like magnifying lenses or task lighting. Which solutions are best? Until tested in the proper context, the lighting community will never know.

The authors are encouraged to investigate the benefits of scotopically-rich light within the context of "realistic conditions" and other potential solutions, and to test visual performance, not just pupil size. Furthermore, they should review their work which demonstrates enhanced spectral effects with incorrect refraction[l] and use subjects with correct vision. Individuals with refractive errors would be better served with eyeglasses than with scotopically-rich light. The results of such research would put into proper, and much more useful, perspective.

John Bullough
Rensselaer Polytechnic Institute

a. Berman, S.; Fein, G.; Jewett, D.; and Ashford F. 1993. Luminance-controlled pupil size affects Landolt C Task performance. J. Illum. Eng. Soc. 22(2):150.

b. Berman, S.; Fein, G.; Jewett, D.; and Ashford F. 1994. Landolt-C recognition in elderly subjects is affected by scotopically intensity. J. Illum. Eng. Soc. 23(2):123.

c. Berman, S.; Jewett, D.; Fein, G.; Benson, B.; Law, T. M.; and Myers, A. 1996. Luminance-controlled pupil size affects word-reading accuracy. J. Illum. Eng. Soc. 25(1):51.

d. Alpern, M. and Ohba, N. 1972. The effect of bleaching and backgrounds on pupil size. Vis. Res. 12:943.

e. Alpern, M. and Campbell. 1962 The spectral sensitivity of the consensual lightreflex. J. Physiol. 164:178.

f. Atchison, D.; Smith, G.; and Efron, N. 1979. The effect of pupil size on visual acuity in uncorrected and corrected myopia. Am. J. Optom. Physiol. Opt. 56(5):315.

g. Campbell, F. and Gregory A. 1960. Effects of size of pupil on visual acuity. Nature 187:1121-1123.

h. Woodhouse, J. 1975. The effect of pupil size on grating detection at various contrast levels. Vis. Res. 15:645-648.

i. Cobb, P. 1915. The influence of pupillary diameter on visual acuity. Am J. Physiol. 36:335-346.

j. Berman, S.; Fein, G.; Jewett, D.; and Ashford, F. 1994. Authors response to discussion of Landolt-C recognition in elderly subjects is affected by scotopic intensity. J. Illum. Eng. Soc. 23:(2):129-130.

k. Dillon, R.; Pasini. I.; and Rea M. 1987. Survey of visual contrast in office forms. Proc. CIE (21st sess.). Venice: Commission Internationale de I Éclairage.

l. Berman, S.; Jewett, D.; Fein, G.; Benson, B.; Law,T. M.; Myers, A.; and Bullimore M. 1996. Lighting spectral effects on Landolt C performance is enhanced by blur and abolished by mydriasis. J. Illum. Eng. Soc. 25(1):42.

Author's Response to Dawn De Grazio

The principal reason for choosing two very different lamps, in terms of S/P ratio (or its surrogate CCT), is to demonstrate the effects with a minimum number of subjects. The direction of effects would be as predicted when comparing the 4100K CCT lamp with the 3500K CCT lamp, but because the S/P ratios of these lamps are fairly close it would take more subjects to specifically demonstrate a statistically significant effect. However, based on our study the 4100K CCT lamp would be more efficacious in terms of its ability to affect pupil size.

We agree with the discussion on the issue of optimizing both S/P ratio and preferred CCT. This is a straight forward computer modeling calculation which the major lamp manufacturers could easily perform. We hope they will do it.

Regarding the scotopic illuminance, it is measured by a meter developed by LMT which has an excellent scotopic filter.

Author's Response to B. L. Collins

A number of specific questions have been posed which we answer in the order presented.

We do not suggest that corrections to the V(λ) function are necessitated by our work. Instead, photometry for lighting practice requires both photopic V(λ) and scotopic V'(λ) sensitivity functions to predict optimal vision. Note that the use of the scotopic sensitivity function V'(λ) provides values in scotopic units e.g., scotopic lux.

As we have shown in previous studies, retinal illuminance does not predict visual performance, hence its determination for lighting practice would be of limited value. Our studies on visual performance, which show that smaller pupils are associated with better performance, are highly consistent with the proposition that optical system aberrations are the limiting factor on visual function at normal interior light levels.

The study presented here demonstrates that for a VDT environment it is the scotopic illuminance at the eye that fixes pupil size. In terms of lighting practice the most efficient way to achieve a given level of visual performance is to optimize the scotopic vertical illuminance. Although we did not study values above 108 photopic lux, the conclusion should hold for higher light levels, up to the point where pupil size reaches its minimum value. Since we have previously demonstrated that pupil size is the controlling factor in setting the limits on visual performance (acuity and contrast sensitivity), specifying the vertical scotopic illuminance is the preferred performance metric in the VDT environment.

Author's Response to John Bullough

The remarks presented do not address the validity of our study, but are instead directed to theoretical objections to the practical use of scotopically enhanced lighting as related to its effect on pupil size. The discussion has implied that threshold measurements are not applicable to tasks that "are well above visual threshold." We note that the discussor's viewpoint is at odds with experience of most patients at optometric examinations, where patient's spectacle prescription are determined. Even if the patient may not perform "near threshold" tasks, the optometrist does not have the patient judge the prescription on the Snellen Chart's large E alone. To the contrary, the smaller letter sizes are used, down to below-threshold size. This provides a clearly defined, objective endpoint, with the consequences that with the correct refraction, the edges of the large E will be maximally sharp. At his own optometric exam, does the discussion prefer not to read the smallest letters because "it is not relevant to vision of larger letters?" Does the discussion object to taking a reading-chart examination when obtaining a driver's license because "it is not relevant to driving tasks?" Indeed, threshold is an objective measure of vision, well established as a valid predictor of vision in psychophysics. The emphasis of the discussion on "visual performance" is misplaced. Few individuals would be willing to have a diopter of added blur to their glasses prescriptions, even if they could still read blurred newspaper headlines.

Our statement that "differences in contrast sensitivity threshold makes no difference on ... reading normal-sized text" is analogous to "added 1.00 DS blur will not prevent reading headlines." But

reading high-contrast normal-sized letters is not the only visual task that occurs under interior lighting. A loss of contrast sensitivity will lead to loss of the subtleties in any visual scene that contains varying shades of contrast.

Given the widespread use of threshold acuity in optometry, and psychophysics, we see no reason why the lighting research should not also use this useful predictor. We have determined that for typical interior lighting levels, you will see better by substituting scotopically enhanced spectra at the same photopic level.

There are a number of statements made by the discussion that are in error. Contrary to his statement that "the authors have not controlled pupil size in any of their studies," in all our studies on visual performance we have taken great care and designed our test protocols to control pupil size by separating the lighting of the task from the room/surround lighting. We have measured the changes in pupil size, and used each subject as their own control (at a different pupil size). The papers referred to by the discussion cover in detail our methods for accomplishing this, and furthermore show graphs of mean pupil size under the controlled conditions employed. The literature on pupil size effects cited (reference F-I) all use monocular artificial pupils, often with paralyzed accommodation, hardly "realistic conditions," that the discussion recommends.

The quotation from our paper on the visual performance of elderly subjects ("no direct correlation between ... changes in ... pupil size ... and contrast threshold change.") is not presented in its proper context. In that study, all subjects (both elderly and young adults) showed significantly better visual performance with smaller pupils, even though there was not a direct correlation between the amount of pupil size change and the amount of performance change. The quote from our papers referred to an attempt to find a direct correlation across subjects between the two amounts. The data for the subject sample size employed showed a trend but, because the correlation under consideration was across subjects, we needed a larger number of subjects to reach significance. The discussion has incorrectly interpreted our discussion; there is no contradiction here, as can be ascertained by reviewing the publication, rather than the discussor's summary.

The discussion suggests "magnifying lenses" for those with visual disability. This comment does not recognize that some vision problems cannot be ameliorated by corrective lenses. For example, intraocular opacities are common in the elderly. While smaller pupils can improve acuity in such a situation, lenses cannot. Similarly, most people become presbyopic with increasing age, a vision deficiency that can only be partially ameliorated with spectacles. Such eyeglasses provide refractive correction for specific distances. However, it is well known in vision science that as pupil size becomes smaller there is a diminishing need for accommodation the—reader can verify that pinhole viewing obviates any need for accommodation. If lighting design can function to reduce the effects of presbyopia, this is surely useful, and also likely to be highly cost effective. The discussor's preoccupation with suprathreshold visual performance as the sole method of judging lighting may be the basis for failing to recognize these benefits of altering spectrum.

The discussion suggests that we "review" our own work (reference L) and then "use subjects with corrected vision." This is easily accomplished, since in reference L our subjects were in fact, refracted by a licensed optometrist. The subjects were tested when both fully corrected and with an added 0.50DS of blur. A visual performance benefit associated with smaller pupils was obtained for these fully-corrected young adult subjects. (The effect was even greater in magnitude in the

same subjects with added blur.) Since the data on subjects with correct vision is available in reference L, the results of the research somehow must already be in a "proper, and much more useful, perspective." The discussion states "Individuals with refractive errors would be better served with eyeglasses than with scotopically-rich light." Many individuals tolerate refractive errors of 0.5-1.0DS before obtaining glasses, and they, as well as fully-corrected glasses wearers, as well as those with normal vision, as well as those with intraocular opacities, can all benefit from scotopically-enhanced lighting. It is unclear from the discussor's comments why anyone must be limited to just one solution or another.

Ernest Orlando Lawrence Berkeley National Laboratory
One Cyclotron Road | Berkeley, California 94720

Prepared for the U.S. Department of Energy under Contract No. DE-AC03-76SF00098