LBNL-41253
UC-414

ERNEST ORLANDO LAWRENCE BERKELEY NATIONAL LABORATORY

R-Parity Violation and Sneutrino Resonances at Muon Colliders

Jonathan L. Feng

Physics Division

January 1998

Presented at
Physics at the First Muon Collider and at the Front End of a Muon Collider,
Batavia, IL,
November 6–9, 1997,
and to be published in
the Proceedings

LOAN COPY
Circulates
For 4 weeks

Bldg 50 Lib Rm 4014
Lawrence Berkeley National Laboratory

LBNL-41253
Copy 2

DISCLAIMER

This document was prepared as an account of work sponsored by the United States Government. While this document is believed to contain correct information, neither the United States Government nor any agency thereof, nor the Regents of the University of California, nor any of their employees, makes any warranty, express or implied, or assumes any legal responsibility for the accuracy, completeness, or usefulness of any information, apparatus, product, or process disclosed, or represents that its use would not infringe privately owned rights. Reference herein to any specific commercial product, process, or service by its trade name, trademark, manufacturer, or otherwise, does not necessarily constitute or imply its endorsement, recommendation, or favoring by the United States Government or any agency thereof, or the Regents of the University of California. The views and opinions of authors expressed herein do not necessarily state or reflect those of the United States Government or any agency thereof or the Regents of the University of California.

hep-ph/9801248
January 1998

LBNL–41253
UCB–PTH–98/03

R-Parity Violation and Sneutrino Resonances at Muon Colliders [1]

Jonathan L. Feng

Theoretical Physics Group, Lawrence Berkeley National Laboratory and Department of Physics, University of California, Berkeley, CA 94720

Abstract. In supersymmetric models with R-parity violation, sneutrinos may be produced as s-channel resonances at $\mu^+\mu^-$ colliders. We demonstrate that, for R-parity violating couplings as low as 10^{-4}, sneutrino resonances may be observed and may be exploited to yield high precision SUSY parameter measurements. The excellent beam energy resolution of muon colliders may also be used to resolve MeV level splittings between CP-even and CP-odd sneutrino mass eigenstates.

To appear in
Proceedings of the Workshop on Physics at the First Muon Collider
and at the Front End of a Muon Collider
Fermi National Accelerator Laboratory, 6–9 November 1997
and
Proceedings of the 4th International Conference on
Physics Potential and Development of $\mu^+\mu^-$ Colliders
San Francisco, 10–12 December 1997

[1] This work was supported in part by the Director, Office of Energy Research, Office of High Energy and Nuclear Physics, Division of High Energy Physics of the DOE under Contracts DE–AC03–76SF00098 and by the NSF under grant PHY–95–14797.

Low-energy supersymmetry (SUSY) is a leading candidate for physics beyond the standard model (SM). When exploring the physics opportunities at a muon collider, it is therefore important to consider its potential for discovering supersymmetric particles and determining SUSY parameters.

For many studies, the muon collider's potential parallels that of more extensively studied e^+e^- colliders, with obvious modifications for differences in luminosity and beam polarization. In fact, as studies of LEP II typically assume $\sqrt{s} \sim 190$ GeV and a total integrated luminosity of ~ 1 fb^{-1}, characteristics similar to those of the proposed First Muon Collider (FMC), many interesting results from these studies apply equally well to the FMC. For example, from chargino production at LEP II or the FMC, gaugino mass unification and the viability of the LSP as a dark matter candidate can be tested in a highly model-dependent manner [1].

There are, however, essential differences that warrant more careful study. Most obviously, if a muon collider reaches $\sqrt{s} \sim 4$ TeV, a great number of complicated sparticle signals may be present [2], as well as a number of backgrounds that have not yet been intensively studied. In addition, the excellent beam energy resolution of muon colliders is promising for precise mass measurements, whether through threshold scans [3] or kinematic endpoints [4].

In this study, we will consider what a muon collider may bring to the study of R-parity violating ($\not{R}_P$) SUSY theories. When R-parity is violated, the distinction between neutral Higgs bosons and scalar neutrinos is blurred, and so scalar neutrinos are also produced as s-channel resonances at lepton colliders. As with Higgs resonances, such resonances may be highly suppressed at electron colliders. At muon colliders, however, we will see that even if $\not{R}_P$ couplings are comparable to their Yukawa coupling counterparts, sneutrino resonances may be exploited to yield high precision measurements of SUSY parameters. Further details may be found in Ref. [5]. (See also Ref. [6].)

R-parity is defined to be $R_P = +1$ and -1 for SM particles and their superpartners, respectively. If R-parity is conserved, all superpartners must be produced in pairs. However, renormalizable gauge-invariant interactions that explicitly violate R-parity and lepton number are also allowed by the superpotential

$$\begin{aligned} W &= \lambda L L E^c + \lambda' L Q D^c \\ &= \lambda_{ijk}(N_i E_j E_k^c - E_i N_j E_k^c) + \lambda'_{lmn}(N_l D_m D_n^c - V_{pm}^* E_l U_p D_n^c) \ , \end{aligned} \tag{1}$$

where the lepton and quark chiral superfields $L = (N, E)$, E^c, $Q = (U, D)$, and D^c contain the SM fermions f and their scalar partners $\tilde{f}$, V is the CKM matrix, $i < j$, and all other generational indices are arbitrary. With the couplings of Eq. (1), superpartners may be produced singly at colliders. In particular, sneutrinos $\tilde{\nu}$ may be produced as s-channel resonances at lepton colliders through the λ couplings [7,8]. Such resonance production is unique in that it probes supersymmetric masses up to $\sqrt{s}$. As sneutrinos are likely to be among the lighter superparticles, even a first stage muon collider with $\sqrt{s} = 80 - 250$ GeV will cover much of the typically expected mass range. We will explore the potential of a muon

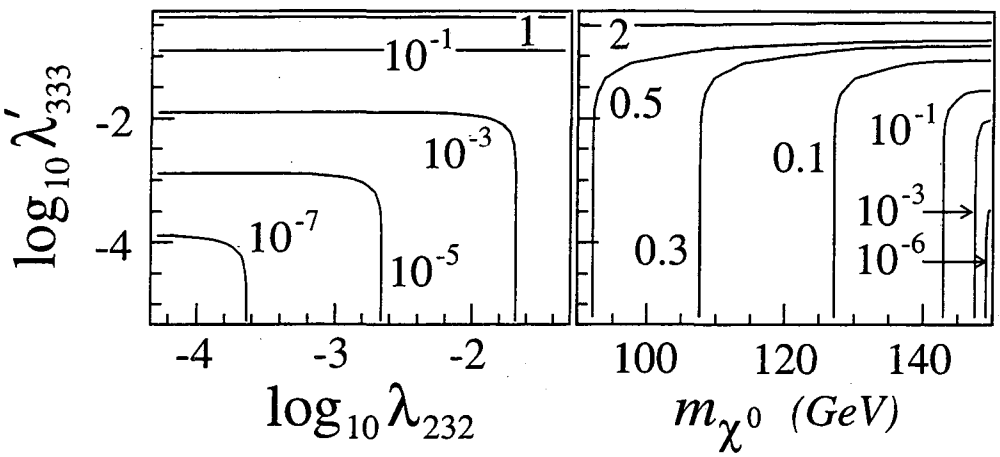

FIGURE 1. Contours of total decay width $\Gamma_{\tilde{\nu}_\tau}$ in GeV (i) for $m_{\tilde{\nu}_\tau} = 100$ GeV, assuming only $\not{R}_P$ decays $\tilde{\nu}_\tau \to \mu^+\mu^-, b\bar{b}$ are open, and (ii) for $m_{\tilde{\nu}_\tau} = 150$ GeV, assuming that $\tilde{\nu}_\tau \to \nu_\tau\chi^0$ decays are also allowed, with $\chi^0 = \tilde{B}$ and fixed $\lambda_{232} = 5 \times 10^{-5}$.

collider to study such resonances, assuming luminosity and beam resolution options $(\mathcal{L}, R) = (1\ \text{fb}^{-1}/\text{yr}, 0.1\%)$ and $(0.1\ \text{fb}^{-1}/\text{yr}, 0.003\%)$.

At muon colliders, sneutrinos $\tilde{\nu}_e$ and $\tilde{\nu}_\tau$ may be produced in the s-channel. They can then decay through λ (λ') couplings to charged lepton (down-type quark) pairs or through R_P-conserving decays, such as $\tilde{\nu} \to \nu\chi^0$. In the latter case, the lightest neutralino χ^0 subsequently decays to three SM fermions through $\not{R}_P$ interactions. The phenomenology of sneutrino resonances is thus rather complicated in full generality. However, in analogy with the Yukawa couplings, $\not{R}_P$ couplings involving higher generational indices are usually expected to be larger. We therefore focus on $\tilde{\nu}_\tau$ production through the coupling λ_{232}, and, in addition to the decay $\tilde{\nu}_\tau \to \mu^+\mu^-$, consider the possibility of $\tilde{\nu}_\tau \to b\bar{b}$ decays governed by λ'_{333}. For simplicity, we take these two $\not{R}_P$ couplings to be real and assume that all other $\not{R}_P$ parameters are negligible. The current bounds on these couplings arising from a variety of sources [5] are $\lambda_{232} \lesssim 0.06$, $\lambda'_{333} \lesssim 1$, and $\lambda_{232}\lambda'_{333} \lesssim 0.001$. We will also consider a scenario in which the R_P-conserving decay $\tilde{\nu}_\tau \to \nu_\tau\chi^0$ is important. Fig. 1 shows representative decay widths for the three modes.

The cross section for resonant $\tilde{\nu}_\tau$ production is

$$\sigma_{\tilde{\nu}_\tau}(\sqrt{s}) = \frac{8\pi\Gamma(\tilde{\nu}_\tau \to \mu^+\mu^-)\Gamma(\tilde{\nu}_\tau \to X)}{(s - m^2_{\tilde{\nu}_\tau})^2 + m^2_{\tilde{\nu}_\tau}\Gamma^2_{\tilde{\nu}_\tau}}\ , \tag{2}$$

where a factor of 2 has been explicitly included to account for both $\tilde{\nu}_\tau$ and $\tilde{\nu}^*_\tau$ exchange, X denotes a generic final state from $\tilde{\nu}_\tau$ decay, and $\Gamma_{\tilde{\nu}_\tau}$ is the total sneutrino decay width. The effective cross section $\overline{\sigma}_{\tilde{\nu}_\tau}$ is obtained by convoluting $\sigma_{\tilde{\nu}_\tau}(\sqrt{s})$ with the collider's $\sqrt{s}$ distribution. Neglecting (for purposes of discussion) bremsstrahlung and beamstrahlung, this distribution is well-approximated by a Gaussian distribution with rms width $\sigma_{\sqrt{s}} = 7$ MeV $[R/0.01\%]\,[\sqrt{s}/100\ \text{GeV}]$,

where R is the beam energy resolution factor. In two extreme limits, $\overline{\sigma}_{\tilde{\nu}_\tau}$ can be expressed in terms of branching fractions B as

$$\Gamma_{\tilde{\nu}_\tau} \ll \sigma_{\sqrt{s}} : \quad \overline{\sigma}_{\tilde{\nu}_\tau}(m_{\tilde{\nu}_\tau}) \simeq \frac{\sqrt{8\pi^3}\,\Gamma_{\tilde{\nu}_\tau}}{m^2_{\tilde{\nu}_\tau}} \frac{}{\sigma_{\sqrt{s}}} B(\mu^+\mu^-)B(X)\,,$$

$$\Gamma_{\tilde{\nu}_\tau} \gg \sigma_{\sqrt{s}} : \quad \overline{\sigma}_{\tilde{\nu}_\tau}(m_{\tilde{\nu}_\tau}) \simeq \frac{8\pi}{m^2_{\tilde{\nu}_\tau}} B(\mu^+\mu^-)B(X)\,. \tag{3}$$

If only highly suppressed $\not{R}_P$ decays are present, $\overline{\sigma}_{\tilde{\nu}_\tau} \propto \Gamma_{\tilde{\nu}_\tau}/\sigma_{\sqrt{s}}$. The small values of $\sigma_{\sqrt{s}}$ possible at a muon collider thus provide an important advantage for probing small $\not{R}_P$ couplings. At a muon collider, the effects of bremsstrahlung are small (but are included in our numerical results); beamstrahlung is negligible.

The signals for $\tilde{\nu}_\tau$ production depend on the $\tilde{\nu}_\tau$ decay patterns. We consider two well-motivated scenarios. In the first, $m_{\tilde{\nu}_\tau} < m_{\chi^0}$, and $\tilde{\nu}_\tau$ decays only through $\not{R}_P$ operators. Neglecting $\not{R}_P$ couplings other than λ_{232} and λ'_{333}, the signal is $\mu^+\mu^-$ or $b\bar{b}$ pairs in the final state. For concreteness, we consider $m_{\tilde{\nu}_\tau} = 100$ GeV.

The dominant backgrounds are Bhabha scattering and $\mu^+\mu^- \to \gamma^*, Z^* \to \mu^+\mu^-, b\bar{b}$. To reduce these, we apply the following cuts: for the $\mu^+\mu^-$ ($b\bar{b}$) channel, we require $60° < \theta < 120°$ ($10° < \theta < 170°$) for each muon (b quark). The stronger θ cuts in the $\mu^+\mu^-$ channel are needed to remove the forward-peaked Bhabha scattering. We also require $|m_{f\bar{f}} - m_{\tilde{\nu}_\tau}| < 7.5$ GeV in both channels to reduce background from radiative returns to the Z. After the cuts above and including beam energy spread and bremsstrahlung, the background cross sections at $\sqrt{s} = 100$ GeV are $\sigma(\mu^+\mu^-) = 3.5 \times 10^4$ fb and $\sigma(b\bar{b}) = 2.0 \times 10^5$ fb.

In this scenario, $\Gamma_{\tilde{\nu}_\tau}$ is unknown *a priori*, but a very small $\Gamma_{\tilde{\nu}_\tau}$ is possible. We choose the $(\mathcal{L}, R) = (0.1\ \text{fb}^{-1}/\text{yr}, 0.003\%)$ option, which maximizes $S/\sqrt{B}$ if $\Gamma_{\tilde{\nu}_\tau}$ is indeed small. With this choice, signal cross sections after cuts are given by the solid contours in Fig. 2. We see that the cross sections may be extremely large (> 1 nb) in some regions of the allowed parameter space.

In Fig. 2 we also give sneutrino resonance discovery contours for two extreme possibilities. In the most optimistic case, the sneutrino mass is exactly known and the total luminosity is applied at the sneutrino resonance peak. The corresponding "optimistic" 3σ discovery contours are given by dashed lines. (In calculating $S/\sqrt{B}$ for the $b\bar{b}$ mode here and below, we include a 75% efficiency for tagging at least one b quark.) More realistically, the sneutrino mass will be known only approximately from other colliders with some uncertainty $\pm\frac{1}{2}\Delta m_{\tilde{\nu}_\tau}$; we assume $\Delta m_{\tilde{\nu}_\tau} = 100$ MeV using the fully reconstructable $\not{R}_P$ decays. The dotted contours of Fig. 2 represent the 3σ "pessimistic/scan" $\tilde{\nu}_\tau$ discovery boundaries, where the effects of having to scan over the allowed sneutrino mass interval are included. (See Ref. [5] for details.) The actual discovery limit will lie between the dashed and dotted contours. We see that $\tilde{\nu}_\tau$ resonance observation is possible for $\not{R}_P$ couplings as low as $10^{-3} - 10^{-4}$.

We now consider a second scenario in which $m_{\tilde{\nu}_\tau} > m_{\chi^0}$. In addition to $\not{R}_P$ decays, decays $\tilde{\nu}_\tau \to \nu_\tau\chi^0$ are now also allowed and typically dominate, with χ^0 then decaying to $\nu_\tau\mu\mu$ or $\nu_\mu\mu\tau$ through the λ_{232} coupling, or $\nu_\tau b\bar{b}$ through the λ'_{333}

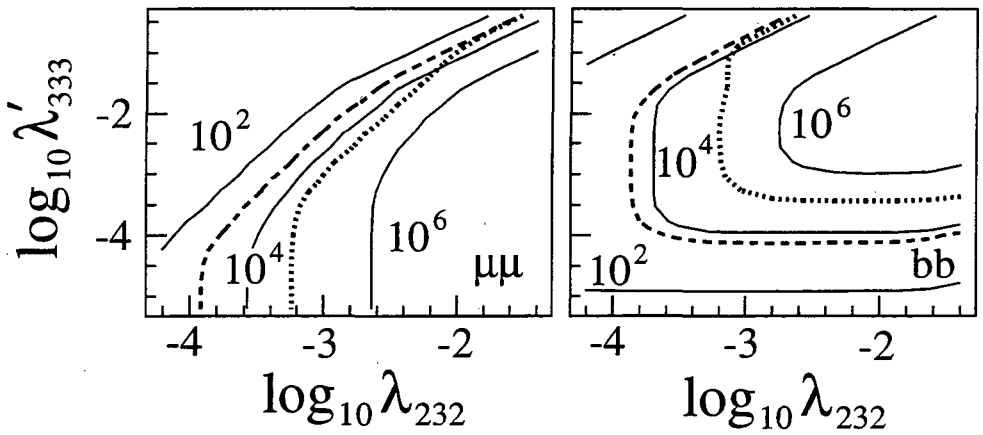

FIGURE 2. Contours for (i) $\sigma(\mu^+\mu^- \to \tilde{\nu}_\tau \to \mu^+\mu^-)$ and (ii) $\sigma(\mu^+\mu^- \to \tilde{\nu}_\tau \to b\bar{b})$ (solid) in fb after cuts for the $m_{\tilde{\nu}_\tau} < m_{\chi^0}$ scenario, with $\sqrt{s} = m_{\tilde{\nu}_\tau} = 100$ GeV and $R = 0.003\%$. The dashed and dotted contours give the optimistic and pessimistic/scan 3σ discovery boundaries, respectively, for total integrated luminosity $L = 0.1$ fb^{-1}. (See discussion in text.)

coupling. The final signals are then $\mu^+\mu^- + \not{E}_T$, $\mu^\pm\tau^\mp + \not{E}_T$, and $b\bar{b} + \not{E}_T$. For this scenario, we consider masses $m_{\tilde{\nu}_\tau} = 150$ GeV and $m_{\chi^0} = 100$ GeV.

The leading backgrounds to the $\nu\chi^0$ channels are from $WW^{(*)}$ and $ZZ^{(*)}$. To reduce these, we require $\not{E}_T > 25$ GeV, that the visible final state fermions have $p_T > 25$ GeV and $60° < \theta < 120°$ for the lepton modes ($40° < \theta < 140°$ for the $b\bar{b}\,\not{E}_T$ mode), and that the invariant mass of the two visible fermions be > 50 GeV. With these cuts, the total combined background in the $\nu\chi^0$ channels is ~ 1 fb.

The signal cross sections for the $\nu\chi^0$ channel (without cuts) and the direct $\not{R}_P$ $b\bar{b}$ channel (after cuts as in Fig. 2) are plotted in Fig. 3. We also give 3σ discovery contours for both optimistic and pessimistic/scan cases as before, where we choose the $(\mathcal{L}, R) = (1\ \text{fb}^{-1}/\text{yr}, 0.1\%)$ option to maximize $\mathcal{L}$. For the "pessimistic/scan" discovery contours, we assume $\Delta m_{\tilde{\nu}_\tau} \sim 2$ GeV from kinematic endpoints. We see that the nearly background-free $\nu\chi^0$ mode makes possible a dramatic improvement in discovery reach compared to the $m_{\tilde{\nu}_\tau} < m_{\chi^0}$ scenario. The $\tilde{\nu}_\tau$ resonance may be discovered for $\lambda_{232} \gtrsim 10^{-4}$, irrespective of the value of λ'_{333}.

Once we have found the sneutrino resonance via the scan described, the crucial goal will be to precisely measure the relevant $\not{R}_P$ couplings. In the $m_{\tilde{\nu}_\tau} < m_{\chi^0}$ scenario, the discovery scan gives a precise determination of $m_{\tilde{\nu}_\tau}$ (and, if $\Gamma_{\tilde{\nu}_\tau} > 2\sigma_{\sqrt{s}}$, a rough determination of $\Gamma_{\tilde{\nu}_\tau}$). We then envision accumulating $L = 0.1$ fb^{-1} ($R = 0.003\%$) at each of the three points $\sqrt{s} = m_{\tilde{\nu}_\tau}$, $m_{\tilde{\nu}_\tau} \pm \Delta\sqrt{s}/2$, where $\Delta\sqrt{s} = \max[2\sigma_{\sqrt{s}}, \Gamma_{\tilde{\nu}_\tau}]$. The off-resonance points ensure good sensitivity to $\Gamma_{\tilde{\nu}_\tau}$. This is especially crucial when $\Gamma_{\tilde{\nu}_\tau} > \sigma_{\sqrt{s}}$, as in this case a single measurement of $\overline{\sigma}_{\tilde{\nu}_\tau}$ at $\sqrt{s} = m_{\tilde{\nu}_\tau}$ determines $B(\tilde{\nu}_\tau \to \mu^+\mu^-)$ but not $\Gamma(\tilde{\nu}_\tau \to \mu^+\mu^-)$; see Eq. (3). In the $m_{\tilde{\nu}_\tau} > m_{\chi^0}$ scenario, we noted that $\Gamma_{\tilde{\nu}_\tau}$ can be computed with good precision from observations at other colliders; we assume a $\pm 5\%$ error for $\Gamma_{\tilde{\nu}_\tau}$. We would then run only at $\sqrt{s} \simeq m_{\tilde{\nu}_\tau}$ and accumulate $L = 3$ fb^{-1} ($R = 0.1\%$). In Fig. 4, the resulting

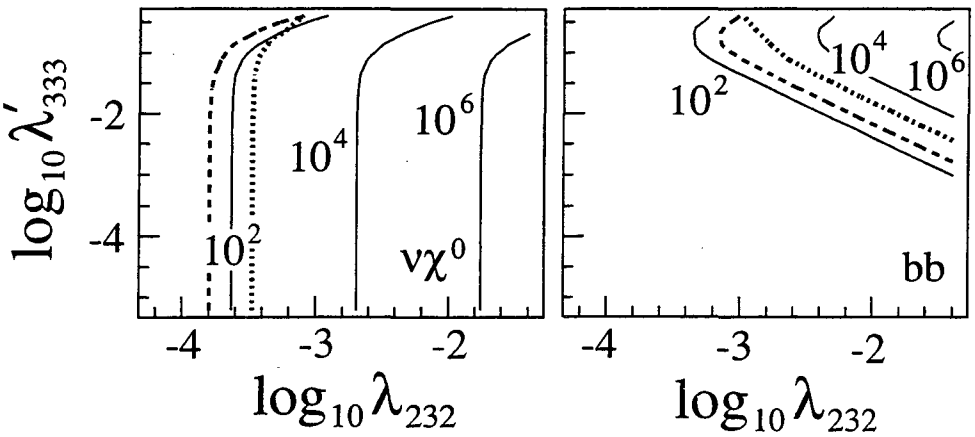

FIGURE 3. Contours for (i) $\sigma(\mu^+\mu^- \to \tilde{\nu}_\tau \to \nu\chi^0)$ (no cuts) and (ii) $\sigma(\mu^+\mu^- \to \tilde{\nu}_\tau \to b\bar{b})$ (after cuts) in fb assuming $m_{\tilde{\nu}_\tau} = 150$ GeV, $m_{\chi^0} = 100$ GeV, and $\chi^0 = \tilde{B}$. The optimistic (dashed) and pessimistic/scan (dotted) discovery contours assume $L = 1$ fb^{-1} and $R = 0.1\%$.

$\chi^2 = 1$ error contours are plotted for each of the two scenarios. We find that 1σ fractional errors at the few percent level can be achieved, even for a small value of $\lambda_{232} = 5 \times 10^{-4}$, which is not very far inside the discovery regions.

As a final remark, we note that $\not{R}_P$ interactions can split the complex scalar $\tilde{\nu}_\tau$ into a real CP-even and a real CP-odd mass eigenstate. This splitting is generated both at tree-level (from sneutrino-Higgs mixing) and radiatively, and both contributions depend on many SUSY parameters. However, such $\not{R}_P$ terms also generate neutrino masses, and it is generally true that the sneutrino splittings generated are $\mathcal{O}(m_\nu)$ [9]. Given the current bound $m_{\nu_\tau} < 18.2$ MeV [10], we see that τ sneutrino splittings may be as large as $\mathcal{O}(10$ MeV$)$. A muon collider with $R = 0.003\%$ is uniquely capable of resolving resonance peak splittings at or below the MeV level.

In summary, we have demonstrated that a muon collider is an excellent tool for discovering sneutrino resonances and measuring their R-parity violating couplings. Note that for small $\not{R}_P$ couplings, absolute measurements through other processes and at other colliders are extremely difficult, as they typically require that $\not{R}_P$ effects be competitive with a calculable R_P-conserving process. For example, $\not{R}_P$ neutralino branching ratios constrain only ratios of $\not{R}_P$ couplings. In addition, a muon collider is unique in its ability to resolve the splitting between the CP-even and CP-odd sneutrino components when this splitting is as small as expected given the current bounds on neutrino masses.

I thank J. Gunion and T. Han for the collaboration upon which this talk was based and the U.C. Davis theory group for hospitality during the course of this work. This work was supported in part by the Director, Office of Energy Research, Office of High Energy and Nuclear Physics, Division of High Energy Physics of the DOE under Contracts DE–AC03–76SF00098 and by the NSF under grant PHY–95–14797.

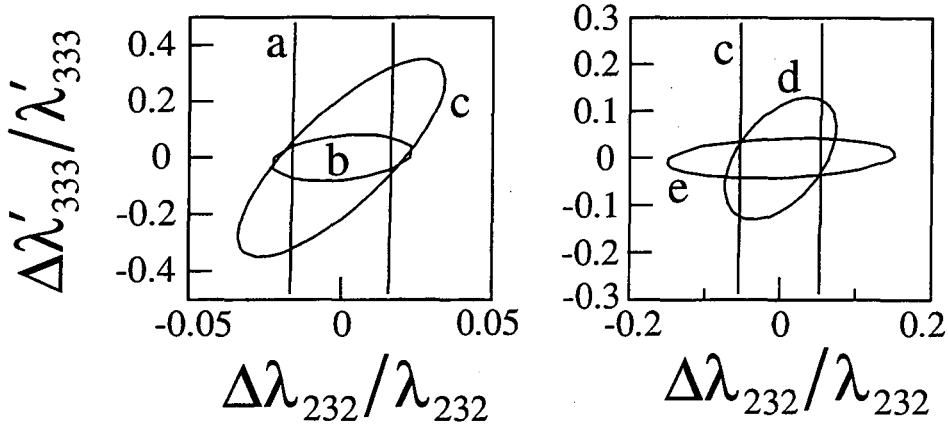

FIGURE 4. $\chi^2 = 1$ contours in the $(\Delta\lambda_{232}/\lambda_{232}, \Delta\lambda'_{333}/\lambda'_{333})$ plane for (i) the $m_{\tilde{\nu}_\tau} = 100$ GeV $< m_{\chi^0}$ scenario, assuming $L = 0.3$ fb^{-1}, $R = 0.003\%$ and (ii) the $m_{\tilde{\nu}_\tau} = 150$ GeV $> m_{\chi^0} = 100$ GeV scenario, assuming $L = 3$ fb^{-1}, $R = 0.1\%$. Contours are for $\lambda_{232} = 5 \times 10^{-4}$ and $\lambda'_{333} =$: (a) 10^{-5}; (b) 5×10^{-4}; (c) 10^{-2}; (d) 10^{-1}; (e) 0.3.

REFERENCES

1. J. L. Feng and M. J. Strassler, Phys. Rev. D **51**, 4661 (1995); *ibid.*, **55**, 1326 (1997).
2. J. Kelly, talk presented at the Workshop on Physics at the First Muon Collider and at the Front End of a Muon Collider, Fermi National Accelerator Laboratory, 6–9 November 1997; J. Gunion, talk presented at the 4th International Conference on Physics Potential and Development of $\mu^+\mu^-$ Colliders, San Francisco, 10–12 December 1997.
3. M. Berger, talks presented at the Workshop on Physics at the First Muon Collider and at the Front End of a Muon Collider, Fermi National Accelerator Laboratory, 6–9 November 1997, hep-ph/9712486 and hep-ph/9712474.
4. J. Lykken, talk presented at the 4th International Conference on Physics Potential and Development of $\mu^+\mu^-$ Colliders, San Francisco, 10–12 December 1997.
5. J. L. Feng, J. F. Gunion, and T. Han, hep-ph/9711414.
6. See also S. Raychaurhuri, talk presented at the Workshop on Physics at the First Muon Collider and at the Front End of a Muon Collider, Fermi National Accelerator Laboratory, 6–9 November 1997.
7. S. Dimopoulos and L. J. Hall, Phys. Lett. B **207**, 210 (1988); S. Dimopoulos, R. Esmailzadeh, L. J. Hall, J.-P. Merlo, and G. D. Starkman, Phys. Rev. D **41**, 2099 (1990); H. Dreiner and S. Lola, in *Workshop on e^+e^- Collisions at 500 GeV*, 1991; V. Barger, G. F. Giudice, and T. Han, Phys. Rev. D **40**, 2987 (1989); J. Kalinowski, R. Rückl, H. Spiesberger, and P. M. Zerwas, Phys. Lett. B **406**, 314 (1997).
8. J. Erler, J. L. Feng, and N. Polonsky, Phys. Rev. Lett. **78**, 3063 (1997).
9. See, *e.g.*, N. Polonsky, hep-ph/9708325; Y. Grossman, hep-ph/9710276.
10. M. Girone, ALEPH Collaboration, talk #1003 presented at the International Europhysics Conference on High Energy Physics, 19–26 August 1997, Jerusalem, Israel.

Ernest Orlando Lawrence Berkeley National Laboratory
One Cyclotron Road | Berkeley, California 94720

Prepared for the U.S. Department of Energy under Contract No. DE-AC03-76SF00098

AAG372
LBL Libraries