LBNL-42097

ERNEST ORLANDO LAWRENCE
BERKELEY NATIONAL LABORATORY

Error Reduction Techniques for Measuring Long Synchrotron Mirrors

Steve Irick

Advanced Light Source Division

July 1998

Presented at the
International Symposium on Optical Science, Engineering, and Instrumentation 43rd Annual Meeting,
San Diego, CA,
July 19–24, 1998,
and to be published in
the Proceedings

REFERENCE COPY
Does Not
Circulate
Bldg. 50 Library - Ref.
Lawrence Berkeley National Laboratory
Copy 1
LBNL-42097

DISCLAIMER

This document was prepared as an account of work sponsored by the United States Government. While this document is believed to contain correct information, neither the United States Government nor any agency thereof, nor the Regents of the University of California, nor any of their employees, makes any warranty, express or implied, or assumes any legal responsibility for the accuracy, completeness, or usefulness of any information, apparatus, product, or process disclosed, or represents that its use would not infringe privately owned rights. Reference herein to any specific commercial product, process, or service by its trade name, trademark, manufacturer, or otherwise, does not necessarily constitute or imply its endorsement, recommendation, or favoring by the United States Government or any agency thereof, or the Regents of the University of California. The views and opinions of authors expressed herein do not necessarily state or reflect those of the United States Government or any agency thereof or the Regents of the University of California.

LBNL-42097
LSBL-479

ERROR REDUCTION TECHNIQUES FOR MEASURING LONG SYNCHROTRON MIRRORS

Steve Irick

Advanced Light Source
Ernest Orlando Lawrence Berkeley National Laboratory
University of California, Berkeley, California 94720

To be presented at the International Symposium on Optical Science, Engineering, and Instrumentation 43rd Annual Meeting, July 1998, San Diego, CA

*This work was supported by the Director, Office of Energy Research, Office of Basic Energy Sciences, Materials Sciences Division, of the U.S. Department of Energy, under Contract No. DE-AC03-76SF00098.

Light Source Note:
Author(s) Initials SCI 15 Jul 98 Date
Group Leader's initials [illegible] Date

Error reduction techniques for measuring long synchrotron mirrors

Steve Irick
Lawrence Berkeley National Lab
University of California
Berkeley, CA 94720

Abstract

Error reduction techniques for the Long Trace Profiler (LTP) are presented. Techniques that have been used for years are critiqued, and new methods are suggested.

Introduction

Many instruments and techniques are used for measuring long mirror surfaces. A Fizeau interferometer may be used to measure mirrors much longer than the interferometer aperture size by using grazing incidence at the mirror surface and analyzing the light reflected from a flat end mirror. Advantages of this technique are data acquisition speed and use of a common instrument. Disadvantages are reduced sampling interval, uncertainty of tangential position, and sagittal/tangential aspect ratio other than unity. Also, deep aspheric surfaces cannot be measured on a Fizeau interferometer without a specially made fringe nulling holographic plate. Other scanning instruments have been developed for measuring height, slope, or curvature profiles of the surface, but lack accuracy for very long scans required for X-ray synchrotron mirrors. The LTP was developed[1,2] specifically for long X-ray mirror measurement, and still outperforms other instruments, especially for aspheres. Thus, this paper will focus on error reduction techniques for the LTP.

The LTP has its precursors. The scanning autocollimator[3,4] was developed by Horne in 1972 and the pencil beam interferometer[5] was developed by von Bieren in 1983. The introduction of the LTP in 1987 was a quantum instrumental improvement over methods that then existed for measuring long X-ray mirrors. The LTP that is used today consists of improvements which have evolved over a decade. Qian et al. have enumerated[6] one set of LTP errors for the measurement of mirrors with a small length-curvature product.

Errors may be classified into two groups: 1) systematic, and 2) external. In addition, both of these may be either a function of time or independent of time (repeatable). Systematic errors are consistently introduced by the instrument. An example of a repeatable systematic error may be carriage pitch error introduced from non-flatness of the ceramic beam over which the air bearing travels, while a nonrepeatable

systematic error may be laser beam pointing change. Examples of external errors are laboratory temperature change and operator mistakes. The systematic errors may be compensated, and the nonrepeatable errors may be reduced by averaging.

Double probe beam

The significant difference between the LTP and its precursors for measuring long mirrors was its ability to accurately quantify slope as a function of tangential position of the mirror surface. A large contribution to this accuracy was the double probe beam with almost zero optical path difference between beams. Phase difference between two beams after reflection from a surface is measured instead of the intensity centroid of a single beam. Thus the detection and conversion to slope are far less influenced from certain noise sources. If the corner reflector translation mechanism in the LTP optical system is not sound, however, the detection and analysis may be influenced by this source of noise.

When a single beam is used, angle of the reflected beam is converted to position on a detector array, as shown in Figure 1. Slope value is calculated simply as proportional to the position of the intensity centroid along the v axis (along the detector array). The intensity centroid is easily influenced by amplitude variations in the reflected probe beam. For example, dirt or stains on the surface and temporal atmospheric changes will add noise to the surface profile.

As seen in Figure 2, the double beam is considerably less sensitive than the single beam to stains and small scratches on the nickel surface of the nominally flat mirror. Signal processing techniques, such as filtering, could improve the appearance of the surface profile. However, filtering could also improve the appearance of the surface obtained with a double beam. If signal processing is used to remove noise, it will invariably remove part of the signal.

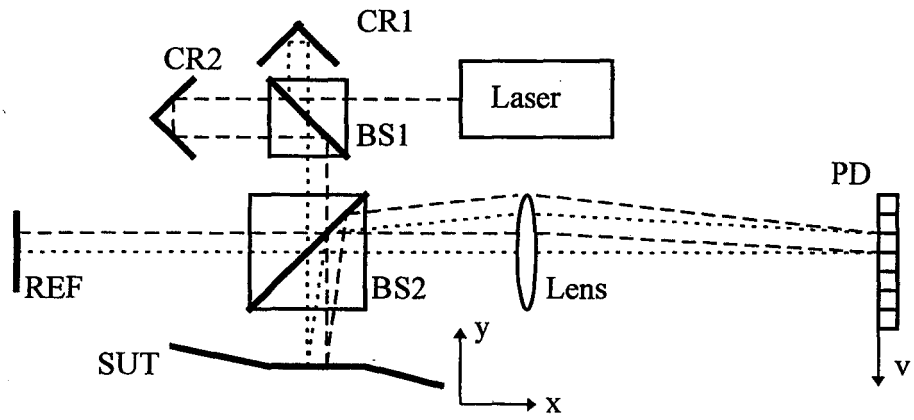

Figure 1. LTP optical system. For a single beam, CR1 is missing and the probe beam path is shown by the dashed line only.

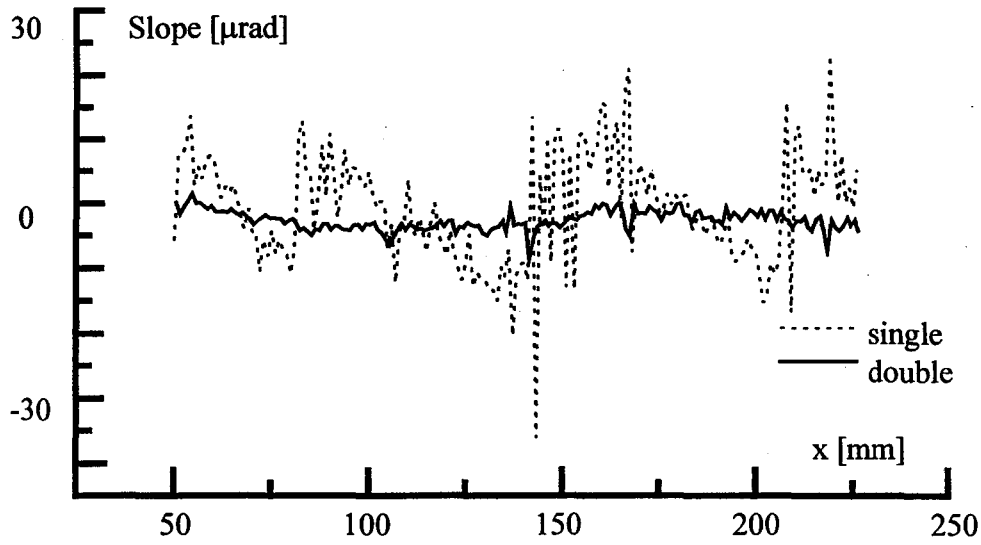

Figure 2. Comparison of single and double probe beam measurements.
For the single beam Vrms = 8.43 μrad, Vp-v = 58.6 μrad.
For the double beam Vrms = 1.47 μrad, Vp-v = 10.1 μrad.

Reference beam

A significant improvement of the LTP was the addition of a reference (REF) beam[7] to compensate for effects of carriage pitch. This is done by measuring the slope function of a stationary mirror at a fixed place while the slope function of the surface under test (SUT) is taken at several points along the measurement line. After the two slope functions are measured, the REF function is subtracted from the SUT function, thus giving a surface slope function with reduced carriage error.

Figure 3 shows the results of measuring a surface with a significant source of noise in the carriage path. (The carriage was made to run over a thin shim for approximately 5 mm of the carriage travel.) Figure 3a is the SUT slope function alone, and Figure 3b is that of the REF function alone. The corrected function, obtained by subtracting the REF from the SUT slope function, is shown in Figure 3c. The source of carriage noise is seen to be compensated; the total variation is reduced by approximately 35 μrad over a scan of 180 mm.

At first the REF was used for compensation of all systematic error[7]. It was later realized[8] that laser pointing instability contributed in a way that exacerbated the error when carriage pitch was compensated. A solution[8] was to monitor the laser beam pointing separately and to compensate for it separately. Bresloff and Takacs[9] solved this

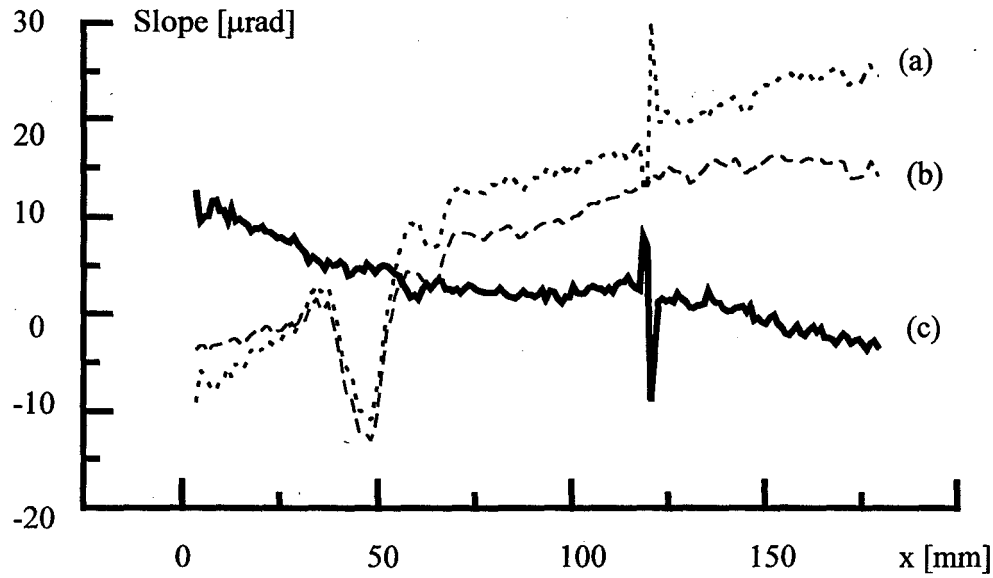

Figure 3. Compensation for carriage pitch error.
(a) SUT signal.
(b) REF signal.
(c) REF subtracted from SUT.

problem a different way by inserting a dove prism in the REF beam path at the carriage. Then both types of errors had the same slope sign, and could be removed by a single subtraction.

It is important for both errors to have the same slope sign if they are to be removed in one subtraction (or addition). The mounting of the SUT with respect to the LTP will require a certain orientation of the dove prism. An incorrect orientation will result in increased SUT measurement error. The reasoning for proper dove prism orientation for each case of SUT mounting is too lengthy to be given here. However, reference is made to another paper[10] which does explain the mathematical development and gives a compact notation for determining this for any SUT mounting. A summary of dove prism orientations with respective SUT mountings is given in Table 1.

It is assumed that one pentaprism PP1 is used for bending the probe beam (pair) in order to produce a horizontal probe beam for the -z mounting case, and that two pentaprisms or mirrors are used for producing an upward propagating probe beam for the -y mounting case. In Table 1 the SUT mounting is the direction of the normal of the mirror surface. The +y direction is the usual upward mounting. Figure 4 shows a SUT in

SUT Mounting	Dove Prism Orientation
+ y	(0, -1, 0)
- z	(0, -0.707, +0.707)
- y	(no dove prism)

Table 1.

the -z direction (horizontal mounting). The dove prism orientation is the direction of the outward normal of the prism's long (internally reflecting) surface. This direction is given in Table 1 in terms of direction cosines (α, β, γ), with the origin near the polarized beamsplitter BS2.

Averaging

In a poor environment the random errors from floor vibrations, temperature variations, and air turbulence can be devastating to any attempt at accurate measurements. Lammert et al. have given an extensive report[11] on these kinds of errors, and have suggested effective means to minimize them. If the noise is attributed to a truly random process and if the distribution of noise is uniform, then it is expected that the noise can be reduced by simple averaging according to

$$\mathrm{Vrms}(N) = \mathrm{Vrms}(1) / \sqrt{N} , \qquad (1)$$

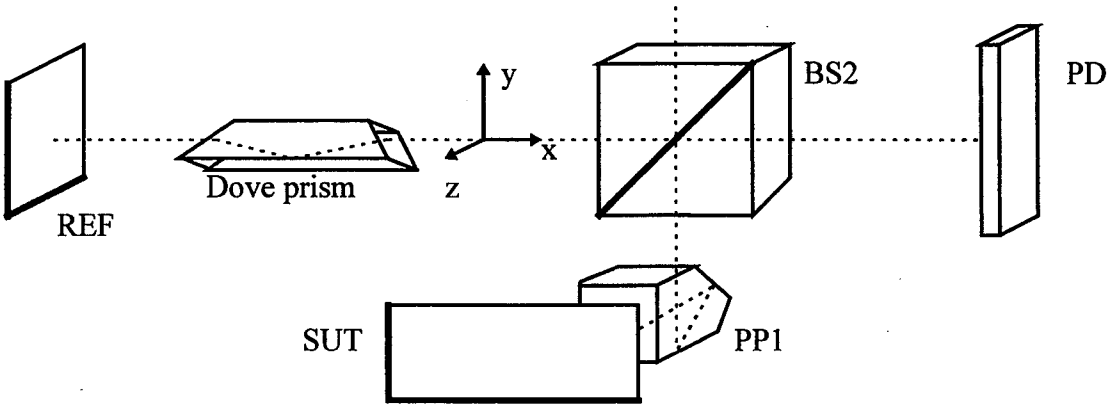

Figure 4. Proper Dove prism orientation in the REF beam for horizontal mounting.

where Vrms(N) is the rms (root mean square) variation of N averaged measurements and Vrms(1) is the rms variation of one typical measurement.

When the measurement noise is no longer a uniform random process then averaging cannot be expected to improve the measurement of the surface. Averaging large numbers of measurements may in fact give a larger Vrms than for a smaller number of measurements. This is the case when external errors influence the measurements in the time it takes to do many N measurements. Becoming familiar with the LTP environment and the LTP system is perhaps the most effective way to judge the optimum value of N.

Translation along the tangential axis

For a "best effort" measurement, the SUT should be translated in the x direction between measurements. Certain systematic LTP errors can be identified by the artifacts that don't change with fixed LTP stage position. Simple averaging (above) may be adequate in reducing these errors. If the LTP system is stable enough, then these artifacts may be quantified and subtracted as a reference to those errors.

Symmetric error removal

Certain errors of symmetry may be reduced[12]. We claim that a measured height profile H(x) along the x direction consists of a signal part (true surface) Hs(x) and a noise part (error) Hn(x). In addition, any function may be separated into its even He(x) and odd Ho(x) parts. Thus a measurement in the forward direction gives

$$H_F(x) = Hse(x) + Hso(x) + Hne(x) + Hno(x). \quad (2)$$

If this mirror is rotated 180 degrees on the LTP stage, then the signal part will be reversed but the noise part (repeatable, systematic) will be the same:

$$H_R(x) = Hse(-x) + Hso(-x) + Hne(x) + Hno(x). \quad (3)$$

Now recall the definitions of even and odd functions:

$$He(-x) = He(x), \quad (4)$$

$$Ho(-x) = -Ho(x). \quad (5)$$

In the LTPw program (LTP control and analysis software for Windows95) the reverse measurement profile may be unrotated to give

$$\begin{aligned} H_U(x) = H_R(-x) &= Hse(x) + Hso(x) + Hne(-x) + Hno(-x) \\ &= Hse(x) + Hso(x) + Hne(x) - Hno(x). \end{aligned} \tag{6}$$

Averaging the forward (Equation (2)) and unrotated (Equation (6)) measurements gives

$$\begin{aligned} H(x) &= [H_F(x) + H_U(x)]/2 \\ &= Hse(x) + Hso(x) + Hne(x), \end{aligned} \tag{7}$$

which is the actual surface plus only the even part of the error. The odd part of the height error has been removed. Figure 5 shows this process graphically.

This analysis has been for height profiles because rotating a height function is more intuitive than rotating a slope function. However, the LTP measures slope. Therefore, since slope is the first derivative of height, we say that the symmetric part of the slope error is removed.

The measurements which demonstrated this error reduction technique were made years ago[12] with a LTP optical system that had severe optical aberrations. An improved optical system has pushed this source of noise into the submicroradian level, and is now more difficult to measure. However, this technique was demonstrated more recently[13] by purposely adding a distorted window to the LTP optical system.

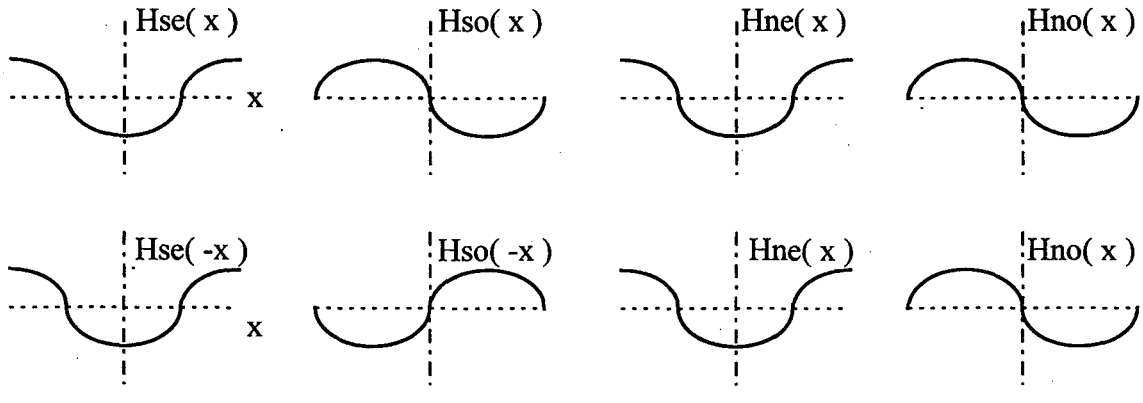

Figure 5. Forward (top) and reverse (bottom) profile components of a mirror.

Antisymmetric error removal

Notice that in Figure 5 the mirror is rotated around the vertical line of symmetry. This changes the odd height function, but not the even height function. In order to change the even height function, its odd orthogonal equivalent must be rotated. This can be done by rotating the mirror about the horizontal line of symmetry. The analysis of Equations (2) through (7) and Figure 5 is valid in this case if slope S(x) is substituted for height H(x).

If the surface existed with no substrate, then the mirror would only have to be flipped upside down, and the back side measured. Real mirrors have a substrate, so this is impractical. However, one can rotate the mirror about the horizontal axis of symmetry and measure the mirror with the surface facing downward (-y normal). Two important sources of antisymmetric, repeatable, systematic error can be reduced with this process. One error source of this type is when the REF probe beam moves along the surface of a non-flat reference mirror. The other comes from a gradual tilting or bending of the stage which may be coupled with position of the carriage. Both of these error sources make the mirror appear to be slightly more concave or convex.

Measurements of a nominally flat mirror 177 mm long and a poor REF mirror are shown here to demonstrate the effectiveness of antisymmetric error removal. The mirror has been measured in forward and reverse directions to remove symmetric error and upwards and downwards to remove antisymmetric error. Figure 6 shows the measurements after symmetric error removal and then after combining (simple averaging in this case) to remove antisymmetric error. In all cases this thick mirror has been mounted at the $L / \sqrt{3}$ points ($L = 177$ mm) in order to maintain the same curvature despite gravity bending. As seen in Figure 6c there is clearly a difference in radius of curvature between the two measurement orientations. The corrected radius of the mirror is 738 m (concave).

A horizontal measurement of a similar region of the same mirror by a Zygo GPI (Fizeau type) interferometer shows that the mirror is also concave with R= 736 m. The Zygo interferometer's reference is flat within $\lambda/30$, which would contribute an insignificant error to the radius.

When performing symmetric or antisymmetric error reduction it is important to repeat the measurement by changing only the mirror surface orientation. The repeatable errors must be repeated. The measurements shown in Figure 6 were made with an internal beamsplitter instead of a dove prism. (LTPw is general enough to analyze intensity patterns of any SUT mounting from either a dove prism (2 patterns) or internal beamsplitter (3 patterns) measurement.) This way the position of the probe beam on the

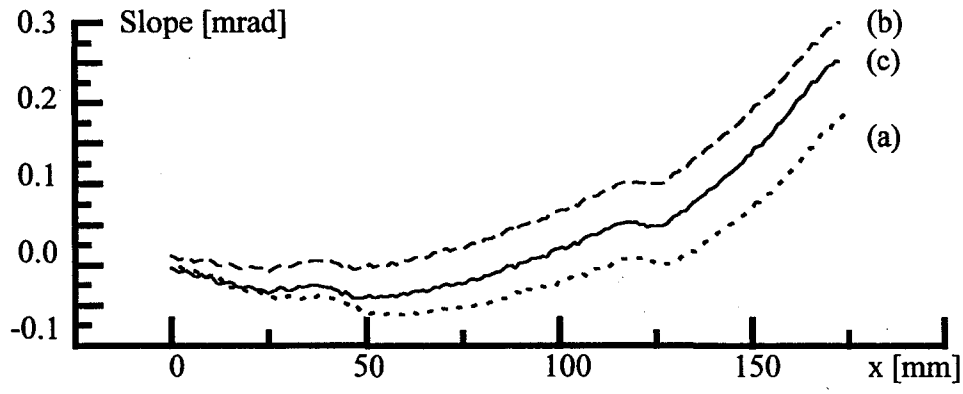

Figure 6. Compensation for antisymmetric error.
(a) Upward measurement; R = 1053 m.
(b) Downward measurement; R = 540 m.
(c) Averaged measurement; R = 732 m.

REF mirror as a function of x was maintained. When a dove prism is used for the upward measurement, the probe beam will in general be at a different place on the REF mirror than when the dove prism is removed for the downward measurement. This difference will change the repeatable errors significantly with a poor quality REF mirror or with a necessarily displaced REF beam.

Absolute slope value

Perhaps the most important parameter of a synchrotron X-ray mirror is its radius of curvature. A typical radius for such a mirror may be from 10 m to 5000 m. The LTP measures slope values of the mirror surface, and it is from these numbers that radius of curvature is determined. Therefore, it is important that the absolute slope value measurements be correct. There are currently two methods for calibrating the LTP for proper slope measurement.

One method uses the measurement of a mirror with known radius of curvature. The most accurately determined radius of curvature is measured on a radius bench with interferometer nulls achieved at the catseye and confocal positions[14]. A practical limit for measuring a mirror in this way is set by a radius bench with a length of about 10 m. Thus, a mirror with a 10 m radius of curvature may be used for calibrating the LTP absolute slope measurement. The chief error from this type of calibration comes from the uncertainty in determining the slope at precise x locations, especially since the scan length along x will be less than 100 mm (for a LTP slope measurement range of

10 mrad). If the measurement interval is 1 mm and the carriage position has an uncertainty of 1 μm, then the slope calibration will have an error of 0.1%, assuming that the mirror's figure is perfect.

Another method[15] measures the angular spacing between intensity patterns that are produced by a diffraction grating. An error analysis[15] using the grating equation assumes that error is from two sources: uncertainty of the grating groove frequency (can be known to 6 decimal places) and uncertainty of the probe beam wavelength. With a stabilized, single frequency HeNe laser the wavelength can be known to 8 decimal places. In principle then, the slope calibration could have an error of better than 0.001%. If an ordinary laser diode ($\lambda = 670$ nm) is used as a probe beam source, then the wavelength uncertainty is 2 nm, in which case the slope calibration will have an error of 0.3%. This is demonstrated by the periodic slope calibrations that are given the LTP in the Advanced Light Source Optical Metrology Lab. It is seen that adjustment for the slope calibration can vary by about 0.2%, depending on lab temperature.

Summary

Several sources of error in LTP measurements are presented. Techniques for reducing error from amplitude noise, carriage pitching, and laser pointing instability are shown to be effective. Methods for calibrating the LTP for absolute slope measurement are also presented and a discussion given on their limitations.

In addition, symmetric and antisymmetric error reduction techniques are presented. The "nominally flat" mirror used for this demonstration is not flat by today's standards for X-ray synchrotron mirrors, but it serves to show the principle of antisymmetric error reduction. For radii of curvature over 10000 m, the errors from imperfections in the LTP optical system components are on the same order of magnitude as errors introduced by adding hardware for a downward measurement. The torque on the carriage from the added hardware causes the probe beam to pass through the components at different positions, making these systematic errors unrepeatable.

Acknowledgments

The author wishes to thank Steve Fisher at Boeing Rocketdyne (Albuquerque Division) and all the others who use the LTP critically, never assuming that any instrument will automatically give the right answer. Thanks also to Wayne McKinney and Malcolm Howells for their helpful discussions.

This work was supported by the Director, Office of Energy Research, Office of Basic Energy Sciences, Materials Sciences Division of the U. S. Department of Energy, Under contract No. DE-AC03-76SF00098.

References

1. Takacs, P. Z., and Qian, S, *United States Patent* 4884697 (1989).

2. Takacs, P. Z., Feng, S. K., Church, E. L., Qian, S., and Liu, W., "Long trace profile measurements on cylindrical Aspheres," *Proc. SPIE*, **Vol. 966** (1988), 354-364 .

3. Malacara, J.Z., "Angle, Distance, Curvature, and Focal Length Measurements," *Optical Shop Testing*, Malacara, D., ed., 2nd. Ed., John Wiley & Sons, New York (1992), Chapter 18.

4. Horne, D.F., *Optical Production Technology*, Adam Hilger, London and Crane Russak, New York (1972), Chapter XI.

5. K. von Bieren, "Pencil beam interferometer for aspherical optical surfaces," in Laser Diagnostics, *Proc. SPIE*, **Vol. 343** (1982), 101-108.

6. Qian, S., Jark, W., Takacs, P.Z., "The penta-prism LTP: A long-trace-profiler with stationary optical head and moving penta prism," *Review of Scientific Instruments*, **Vol. 66**, No.3 (March, 1995), 2562-2569.

7. Irick, S. C., McKinney, W. R., Lunt, D. L. J., and Takacs, P. Z., "Using a straightness reference in obtaining more accurate surface profiles from a long trace profiler," *Review of Scientific Instruments*, **Vol. 63**, No.1 (Part IIB) (January, 1992), 1436-1438.

8. Irick, S. C., "Improved measurement accuracy in a long trace profiler: Compensation for laser pointing instability," *Nuclear Instruments and Methods in Physics Research*, **Vol. A347** (1994), 226-230.

9. Takacs, P. Z., Bresloff, C. J., "Significant Inprovements in Long Trace Profiler Measurement Performance," *Proc. SPIE*, **Vol. 2856**, Optics for High Brightness Synchrotron Radiation Beamlines II (1996), 236-245.

10. Lammert, H., Senf, F., Berger, M., "Improvement of Synchrotron Radiation Mirrors below the 0.1 arcsec rms Slope Error Limit with the Help of a Long Trace Profiler," *Proc. SPIE*, **Vol. 3152** (1997), 168-179.

11. Irick, S.C., "Considerations for mounting the dove prism in the reference beam of the Long Trace Profiler," LBNL ALS Beamline Note, **LSBL 430**, 26 January, 1998.

12. McKinney, W. R., Irick, S. C., Lunt, D. L. J., "XUV synchrotron optical components for the Advanced Light Source: Summary of the requirements and the developmental program," *Proc. SPIE*, **Vol. 1740** (1992), 154-160.

13. Irick, S.C., "How to measure a long mirror," ALS/CXRO Lecture Series, 1 December, 1997.

14. Noble, R.H., "Some parameter measurements," *Optical Shop Testing*, Malacara, D., ed., 2nd. Ed., John Wiley & Sons, New York (1992), Chapter 15.

15. Irick, S.C., "Angle calibration of the Long Trace Profiler using a diffraction grating," LBNL ALS Beamline Note, **LSBL 160**, 26 August, 1992.

Ernest Orlando Lawrence Berkeley National Laboratory
One Cyclotron Road | Berkeley, California 94720

Prepared for the U.S. Department of Energy under Contract No. DE-AC03-76SF00098