LBNL-42182

ERNEST ORLANDO LAWRENCE BERKELEY NATIONAL LABORATORY

COMIS – An International Multizone Air-Flow and Contaminant Transport Model

Helmut E. Feustel

Environmental Energy Technologies Division

August 1998

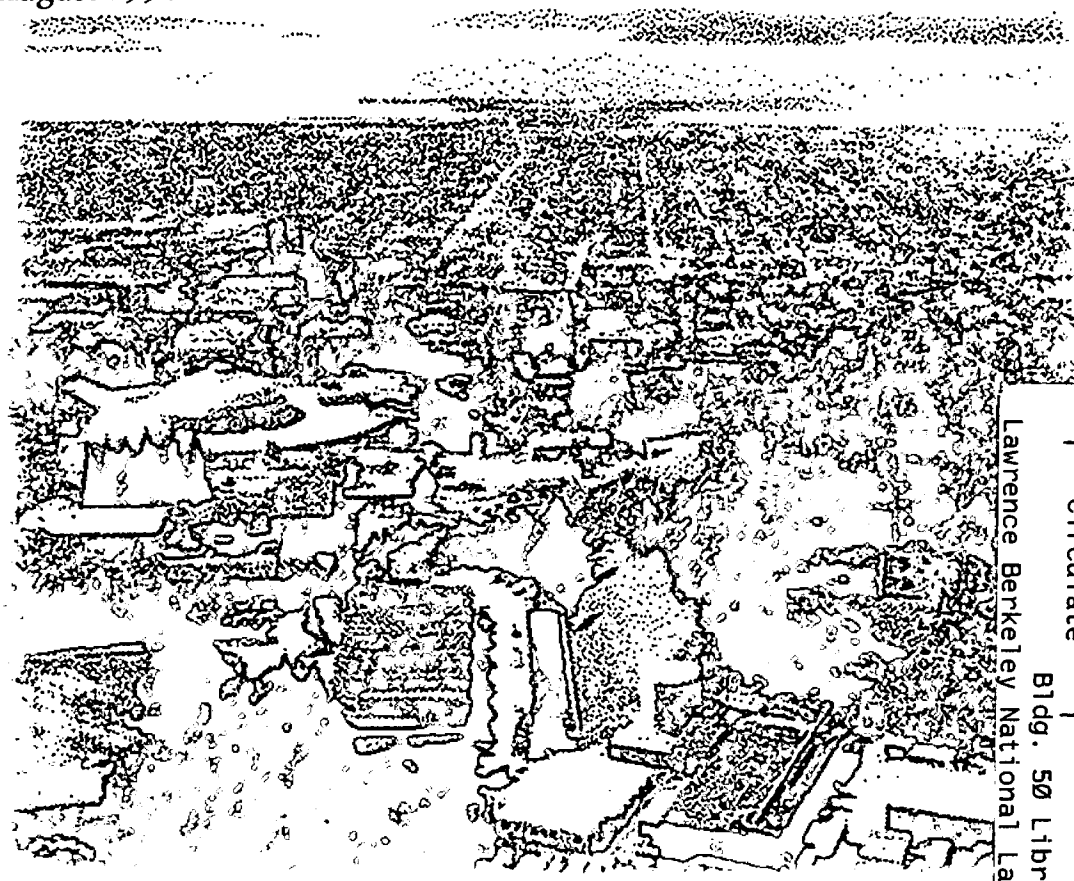

REFERENCE COPY
Does Not
Circulate
Bldg. 50 Library - Ref.
Lawrence Berkeley National Laboratory
Copy 1
LBNL-42182

DISCLAIMER

This document was prepared as an account of work sponsored by the United States Government. While this document is believed to contain correct information, neither the United States Government nor any agency thereof, nor the Regents of the University of California, nor any of their employees, makes any warranty, express or implied, or assumes any legal responsibility for the accuracy, completeness, or usefulness of any information, apparatus, product, or process disclosed, or represents that its use would not infringe privately owned rights. Reference herein to any specific commercial product, process, or service by its trade name, trademark, manufacturer, or otherwise, does not necessarily constitute or imply its endorsement, recommendation, or favoring by the United States Government or any agency thereof, or the Regents of the University of California. The views and opinions of authors expressed herein do not necessarily state or reflect those of the United States Government or any agency thereof or the Regents of the University of California.

LBNL – 42182

COMIS – An International Multizone Air-Flow and Contaminant Transport Model

Helmut E. Feustel

Environmental Energy Technologies Division
Lawrence Berkeley National Laboratory
University of California
Berkeley, CA 94720

August 1998

This report was supported by the Assistant Secretary for Energy Efficiency and Renewable Energy, Office of Building Technology, of the U.S. Department of Energy under Contract No. DE-AC03-76SF00098.

COMIS — An International Multizone Air-Flow and Contaminant Transport Model

Helmut E. Feustel
Lawrence Berkeley National Laboratory
Environmental Energy Technologies Division
Indoor Environment Department
Building 90, Room 3074
Berkeley CA 94720 USA

Abstract

A number of interzonal models have been developed to calculate air flows and pollutant transport mechanisms in both single and multizone buildings. A recent development in multizone air-flow modeling, the COMIS model, has a number of capabilities that go beyond previous models, much as COMIS can be used as either a stand-alone air-flow model with input and output features or as an infiltration module for thermal building simulation programs.

COMIS was designed during a 12 month workshop at Lawrence Berkeley National Laboratory (LBNL) in 1988-89. In 1990, the Executive Committee of the International Energy Agency's Energy Conservation in Buildings and Community Systems program created a working group on multizone air-flow modeling, which continued work on COMIS. The group's objectives were to study physical phenomena causing air flow and pollutant (e.g., moisture) transport in multizone buildings, develop numerical modules to be integrated in the previously designed multizone air flow modeling system, and evaluate the computer code.

The working group supported by nine nations, officially finished in late 1997 with the release of IISiBat/COMIS 3.0, which contains the documented simulation program COMIS, the user interface IISiBat, and reports describing the evaluation exercise.

Keywords

Multizone, Air Flow, Modeling, Model Evaluation

Introduction

To provide good indoor air quality or to calculate a building's space-conditioning loads, it is important to know the air-flow pattern within the building. Accurate air-flow information is also necessary for correctly sizing space-conditioning equipment. There are two fundamental approaches to determining the air-flow rate in buildings: measurement and mathematical modeling (Liddament 1986). **Figure 1** shows the most straightforward method, e.g. measurement, by using a tracer gas technique. Multiple tracer gases can be used to track air flows between the inside and the outside of a building as well as between interior zones (Sherman et. al 1991). It is necessary to understand interzonal flows to determine the impact of infiltration and natural and mechanical ventilation on indoor air quality. Tracer gas measurements give a value for air flows only under prevailing leakage and weather conditions; however, mathematical models can determine infiltration values for all leakage and weather combinations.

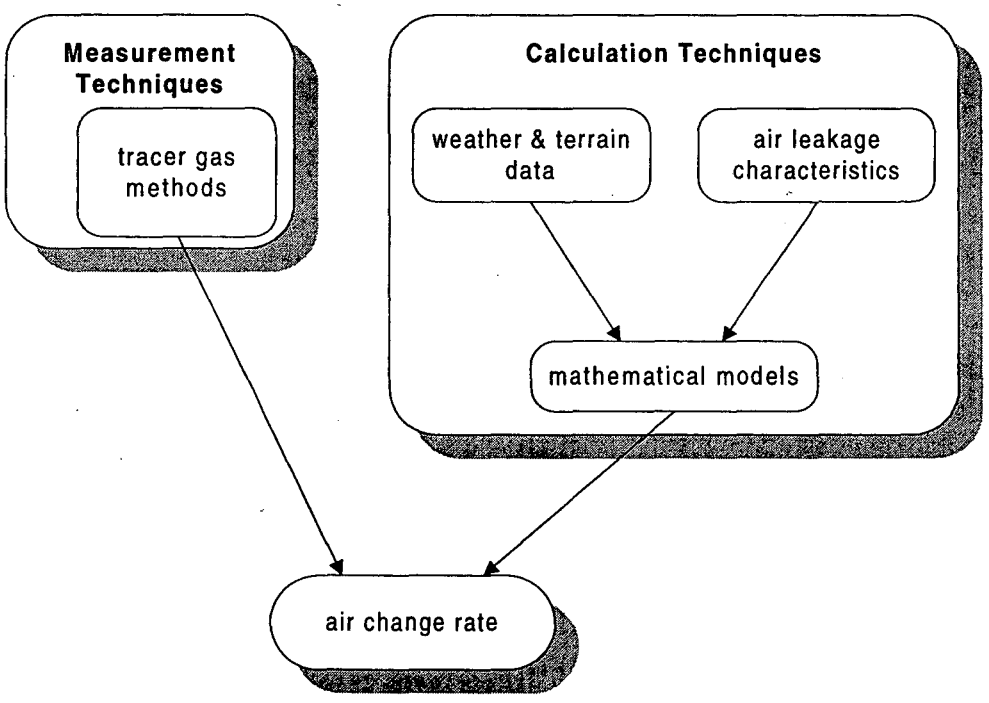

Figure 1: *Alternative Routes to the Estimation of Air Change Rates (Liddament 1986)*

A number of air-flow models have been developed to calculate air-flow-related energy losses and the flow distributions in single-zone and multizone buildings (Feustel and Dieris 1992).

Interzonal air-flow models can be divided into two main categories, single and multizone models. Single-zone models assume that a building can be described

by a single, well-mixed zone. These models are most often used for the single-story, single-family houses with no internal partitions (e.g., all internal doors are open). Unfortunately, single-zone models are also often used to calculate air flows in multizone structures, which goes beyond the limits of the models.

Models have been developed to simulate the interzonal flows of buildings with more than just one well-mixed zone. In fact, most buildings, should, be characterized as multizone structures even when no internal partitions are present (e.g., air plane hangers).

History of Interzonal Air Flow Modeling[1]

A large number of papers describe multizone air-flow models: Jackman 1970; Feustel 1984; Herrlin 1987; Walton 1989. Others describe the application of these numerical tools: Esdorn et.al 1977; Nazaroff et. al 1985; Sextro et.al 1993; Matson et. al 1994; Diamond et. al 1995. A survey of multizone air-flow models published in 1992 described 50 different programs (Feustel and Dieris 1992).

Modeling of Single-Family Houses

The first air-flow models for single-family residences were based on regression analysis of measured data for infiltration and driving weather forces. The regression coefficients for these empirical models reflected structural characteristics as well as shielding effects and occupant behavior, so the coefficients derived for similar residences varied tremendously (Ross and Grimsrud 1978). These models therefore are not appropriate for use as design tools for building energy analysis.

The next step in residential infiltration modeling was the development of physical single-zone models[2]. The amount of information required for these network models led to development of simplified models, based on the physical phenomena of air flow through the building envelope, assuming a certain distribution of air leakage (Sherman 1980). Shielding effects and local vertical wind profiles are taken into account for calculating the infiltration rate in these simplified simple-zone models. Measured data for a large number of houses were used to further fine-tune the effects, especially of shielding (Palmiter et al. 1990).

Following the analysis of an enormous number of measured ventilation rates in houses for which leakage characteristics were determined by pressurization tests, a very simple model predicting average infiltration rate was introduced, in which the air change rate measured at a given pressure differential is divided by a constant number. This model does not take into account weather influence or

[1] Interzonal air-flow models calculate the amount of air that flows from one zone to another. Intrazonal air-flow models (mostly Computational Fluid Dynamics, CFD models) calculate the air-flow patterns within a zone. A few CFD models are being used to model both interzonal and intrazonal flows for a small number of zones.

[2] In the case of a single-zone model, a second zone is taken into consideration; the outdoors.

leakage distribution and this is less sophisticated than is necessary to meet today's multi-zone air modeling needs (AIVC 1991).

MODELS FOR MORE COMPLEX BUILDINGS

Before the advent of single-zone models, a number of computer models were developed to calculate air-flow distribution in multizone buildings.

The principle underlying these models is that buildings are complicated interlacing grid systems of air-mass flow paths. Joints represent the zones of the building, and the connections between joints simulate air-flow paths. These paths include the flow resistances caused by open or closed doors and windows as well as air leakage through walls (see **Figure 2**). The boundary conditions for pressure distribution in the building can be described by grid points outside the building (outside zones).

Multizone infiltration network models deal with the complexity of flows in a building by recognizing the effects of internal flow restrictions. They require extensive information about flow characteristics and pressure distributions. Like their single-zone counterparts, these models are based on the mass balance equation.

Unlike in the single-zone approach, where there is only one internal pressure to be determined, in a multizone model, one pressure must be determined for each zone. This process adds considerably to the complexity of the numerical solving algorithm; however, this additional complexity means the multizone approach can analyze a wide range of infiltration and ventilation air flow distribution patterns.

Because of the nonlinear dependence of air flow rate on pressure difference, the pressure distribution for a building can be calculated only by using an iterative method. Multizone network models have been developed to address simple structures of only a few zones or buildings having arbitrary floor plans, allowing for a number of zones limited only by the capacity of the computer being used for modeling. Models that deal with arbitrary building plans either use a large amount of CPU-space or are equipped with very sophisticated mathematical routines to reduce their storage needs.

Most programs use solver modules that reduce computer storage, e.g., by band matrices or the skyline method. The Newton method is the most common tool used to solve the set of non-linear equations required to model complex air flows (Herrlin 1990).

The first of the multizone models developed was probably the BSRIA-model LEAK which was published in 1970 (Jackman). Since that time many more models have been developed, but most are research tools that are not available to third parties. They are generally difficult to use and are at best "user-tolerant" rather than "user-friendly."

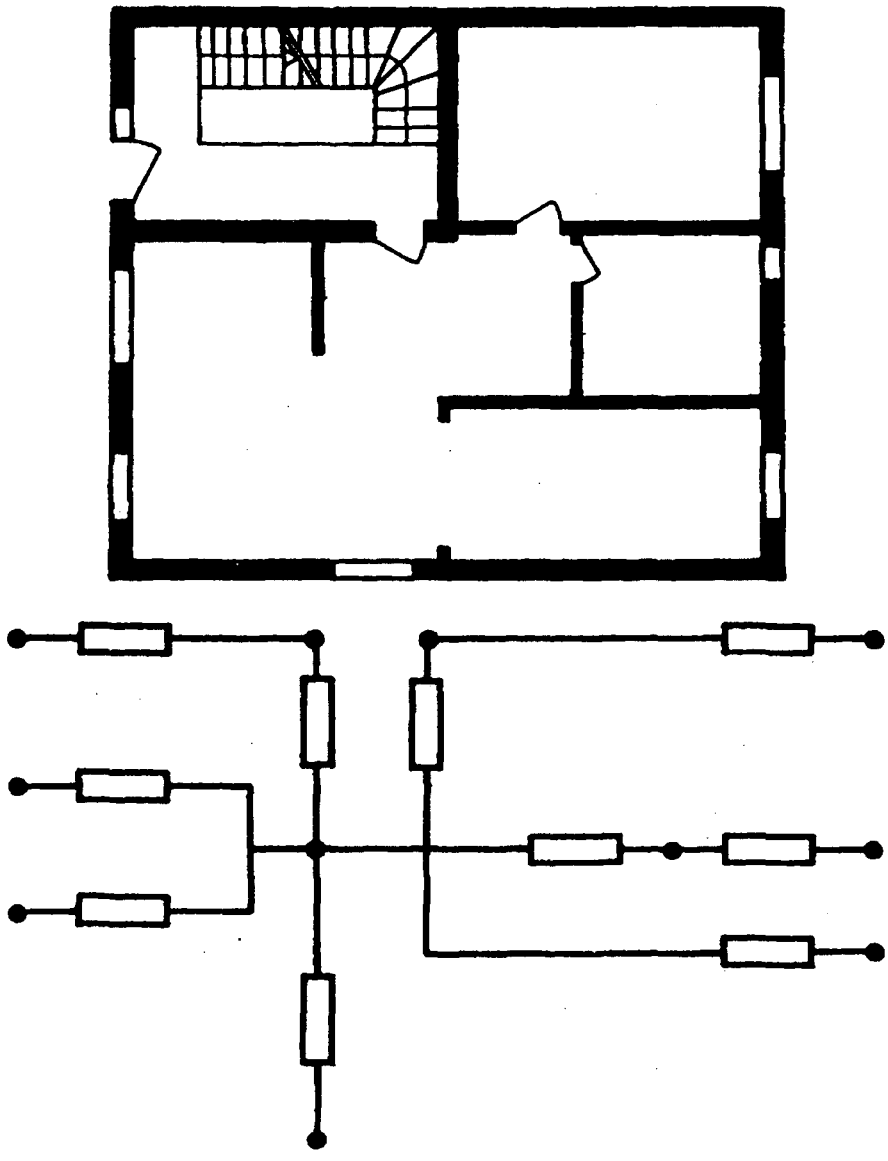

Figure 2: *Floor plan of a simple building and its representation in a two-dimensional nodal Network (Feustel 1984)*

SIMPLIFIED MODELS AND MODEL INTEGRATION

The first simplified multizone model for equipment design calculation for low-rise buildings was based on the overall adding together the lengths of all the cracks (e.g. window and door seams) in a building. This model was later expanded to cover high-rise buildings (DIN 4701 1983). A similar approach was used to develop LBNL's simplified infiltration model, which allows calculation of interzonal air flows by means of a pocket calculator (Feustel and Sherman 1989).

Although multizone air flow models have existed for almost three decades, some thermal building simulation models still use either constant air-flow rate models

or single-zone air-flow models. Now that energy conservation and indoor air quality have led to tighter buildings construction and greater complexity in building air flows, thermal building simulation models without an integrated multizone air flow model are inadequate.

The COMIS Model

GENERAL

COMIS, is a recent development in interzonal air flow modeling (Feustel 1996). Because of its modular structure, COMIS has greater capability to simulate buildings than do earlier multizone air-flow models. COMIS can be used as a stand-alone-model with input and output features or as an air-flow module for thermal building simulation programs. It can also serve as a module library, that could be used by authors of similar models.

COMIS grew from the work of an International Energy Agency's (IEA) expert group that began addressing multizone air-flow modeling in 1990. The objective of this group was to study physical phenomena causing air flow and pollutant transport (e.g., moisture) in multizone buildings and to develop modules to be integrated in a multizone air-flow modeling system. Because it was developed by an international group of scientists under the aegis of the IEA, COMIS has the potential for immediate adoption in a number of countries and may therefore become a standard in multizone air flow modeling. So far, more than 200 copies of the program are being used in more than 15 countries.

Modules being used in COMIS include air-flow equations for large vertical openings, single-sided ventilation, and different opening situations for various window constructions. Special emphasis was given to providing data necessary to use the system (e.g., calculation of wind pressure distribution) (Feustel 1996).

Because partitions or inhomogeneous concentration in a building create multiple zones —areas of fully mixed volume with constant gas concentration and uniform pressure— multizone models are required to describe air flows. Multizone buildings can be single-room structures, single-family houses, or large

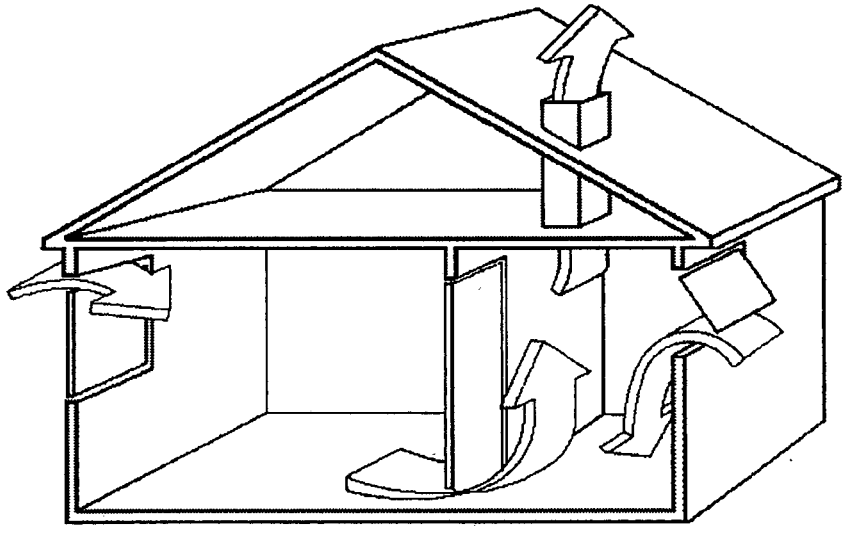

Figure 3: Example of a simple multizone structure (Liddament 1986)

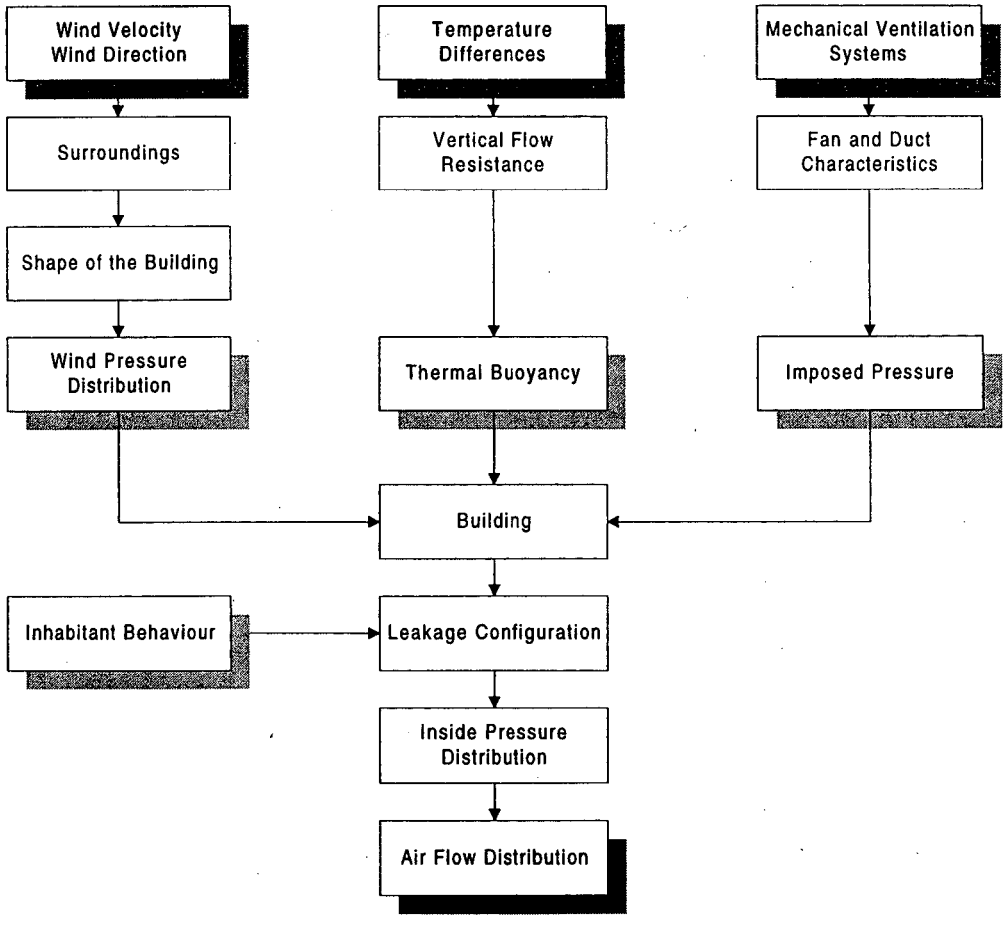

Figure 4: *Influences on the Air-Flow Distribution in Buildings (Feustel 1984)*

building complexes. **Figure 3** shows an example of a very simple multizone building.

The air flows and distribution in a given building are caused by pressure differences resulting from wind, thermal buoyancy, mechanical ventilation systems, or a combination of these. Air flow is also influenced by the distribution of openings in a building's shell and by the building's inner pathways. Actions by building occupants can also lead to significant differences in pressure distribution inside a building (see **Figure 4**). All of these influences on air flow patterns must be accounted for in an effective model.

Boundary Conditions

WIND PRESSURE DISTRIBUTION

The wind produces a velocity and pressure field around a building. The relationship between velocity and the pressures at different locations in the flow field can be obtained by analyzing the dynamics of a particle in fluid. When compared to the static pressure associated with an undisturbed wind-velocity pattern, the pressure field around a building is generally characterized by regions of overpressure (decrease in velocity) on the windward side, and underpressure on the facades parallel to the air stream and on the leeward side.

The pressure distribution around a building is usually described by dimensionless pressure coefficients—the ratio of the surface pressure and the dynamic pressure to the undisturbed flow pattern:

$$c_p(x,y,z) = \frac{p(x,y,z) - p_o(z)}{p_{dyn}(z)}$$

with

$$p_{dyn}(z) = \frac{1}{2}\rho_{out}(z)v^2(z)$$

where

$c_p(x,y,z)$ = pressure coefficient at coordinates x, y, z [-],

$p(x,y,z)$ = surface pressure at coordinates x, y, z [Pa],

$p_o(z)$ = atmospheric pressure at height z [Pa],

$p_{dyn}(z)$ = dynamic pressure in the undisturbed flow at height z [Pa],

$\rho_{out}(z)$ = density of outside air at height z [kg/m^3], and

$v^2(z)$ = wind speed at height z [m/s].

Figure 5 shows the air flow patterns for an isolated building with wind flowing perpendicular to the longer facade. This figure shows how complicated the description of the pressure field around a building can be.

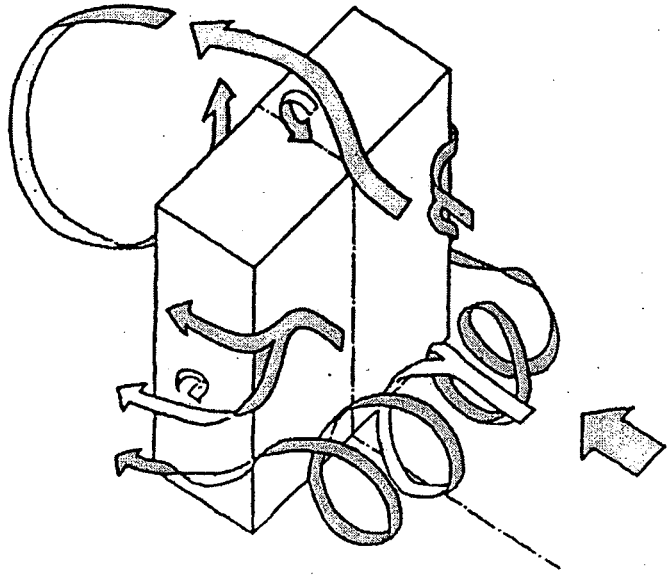

Figure 5: *Air flow around an isolated building*

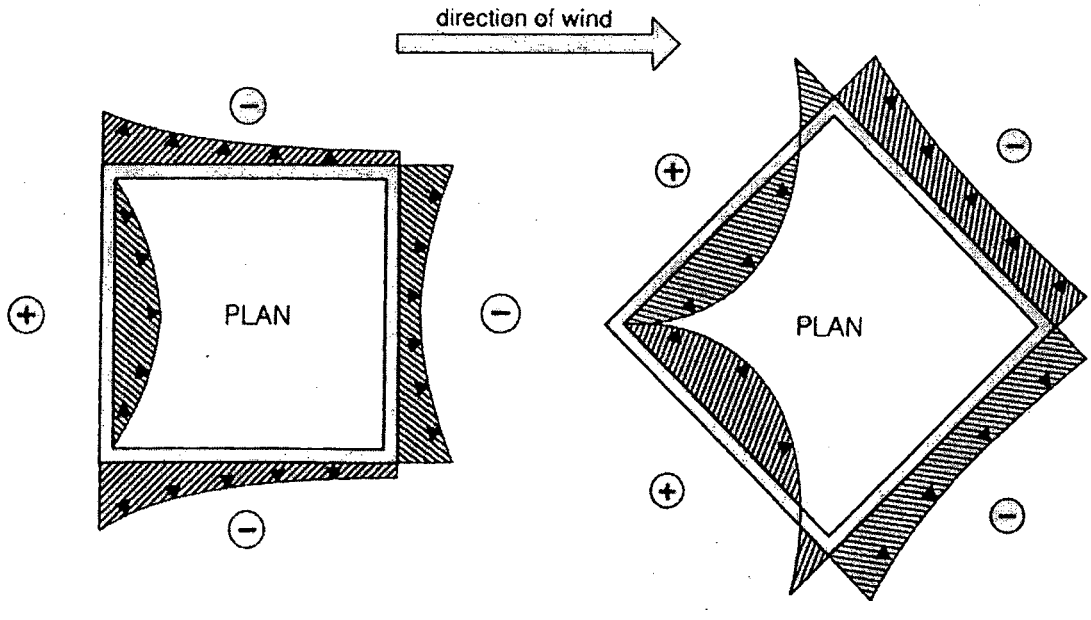

Figure 6a: *Simplified wind pressure distribution; wind direction perpendicular to surface*

Figure 6b: *Simplified wind pressure distribution; wind direction 45 degrees*

Figure 6 shows the simplified horizontal wind pressure distribution for two wind directions; wind direction perpendicular to surface and 45 degrees.

The vertical profile of a graph of wind speed in the atmospheric boundary layer depends primarily on atmospheric stability, the roughness of terrain, the surfaces surrounding the building i.e., the ground and/or other buildings, and wind speed increases with increasing height above ground (see **Figure 7**). A wind velocity profile can be approximated either by a logarithmic equation or a power law expression. The latter is most often used by engineers and building scientists:

$$v(z) = v(z_0)\left[\frac{z}{z_0}\right]^{\alpha}$$

where

$v(z)$	= wind speed at height z [m/s],
$v(z_0)$	= wind speed at reference height z_0 [m/s], and
α	= exponent.

These equations assume that wind flow is isothermal and horizontal and that it will not change direction as a result of differences in terrain. In other words, wind velocity profile is determined by the roughness of the terrain. The value of the exponent α increases with increasing roughness of the solid boundary. For smaller areas of rough surfaces in smoother surroundings, such as a town located in flat, open country, the velocity profile described by the equation above is valid only for a limited height above the obstacles.

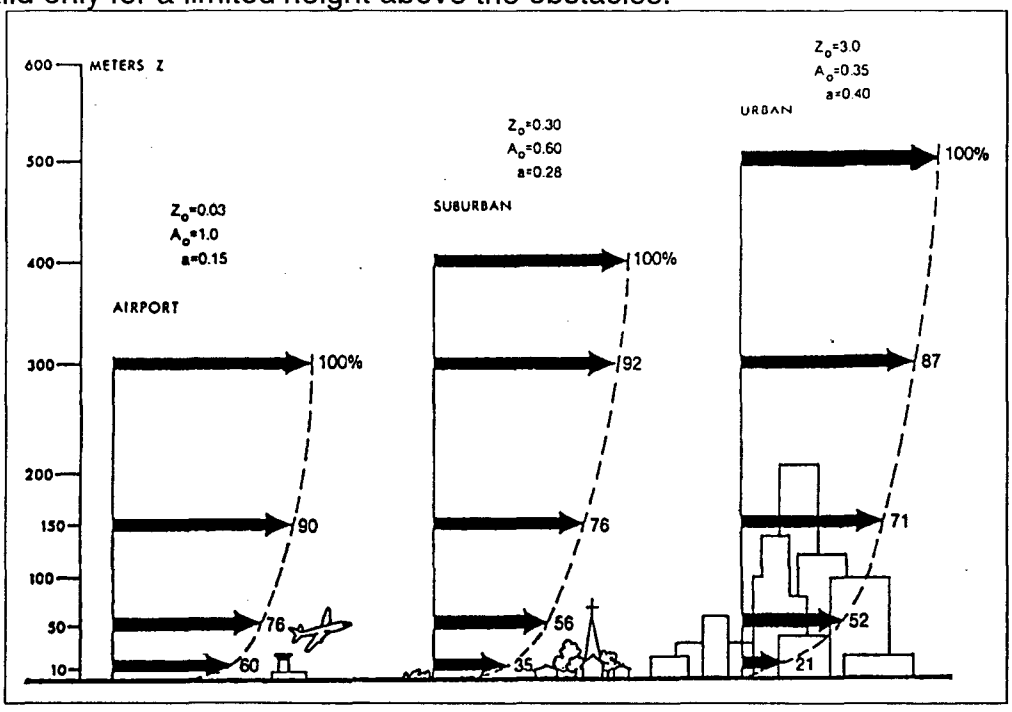

Figure 7: *Wind velocity profiles as a function of terrain (ASHRAE 1989)*

Table 1: *Height of boundary layer and exponents for different terrain (Davenport 1960)*		
roughness type	height of boundary layer [m]	exponent α [-]
flat open country	270	1/7.0 = 0.14
rolling hills	390	1/3.5 = 0.28
inner city areas	510	1/2.5 = 0.40

Both full-scale and wind tunnel measurements have been performed to determine pressure distributions around buildings; results have been published by several authors. Hussain and Lee (1980), for example published a collection of pressure coefficients for the vertical distribution on the center line of multistory buildings. In general, pressure coefficients as a function of height are either "S-shaped" or "reverse C-shaped," both of which can be described by higher order polynomial functions (Kula and Feustel 1988).

These findings regarding pressure distribution are the basis of Grosso's work on the mathematical description of pressure coefficients (Grosso 1992). Based on this work, a module calculating pressure coefficients was integrated into COMIN, the first interface developed for COMIS.

If the physical interrelationship between flow resistance and air flow is known for all flow paths, the interior air-flow distribution for a building can be calculated, as long as there is no temperature difference between inside and outside air.

THERMAL BUOYANCY

Temperature differences between inside and outside air create air density differences that cause pressure gradients. Stack-effect pressure gradients depend only upon temperature differences and the vertical dimension of the building or structure (Tamura and Wilson 1967; Esdorn 1958). This effect is often misunderstood to be a form of convection; however, temperature differences within two columns of air do not cause this phenomenon; the effect is a result of the weight difference between two adjacent columns of air.

The value of pressure differences resulting from the stack effect in multi-story buildings located in cold climates or sheltered areas can easily exceed the values of pressure differences caused by wind effects. The theoretical value of the pressure difference under calm conditions depends on the gradient and distance from the neutral pressure level (NPL), which is the height on the building facade where no pressure difference exists between inside and outside. The distribution of air leakage over the height of the building envelope determines the location of the NPL.

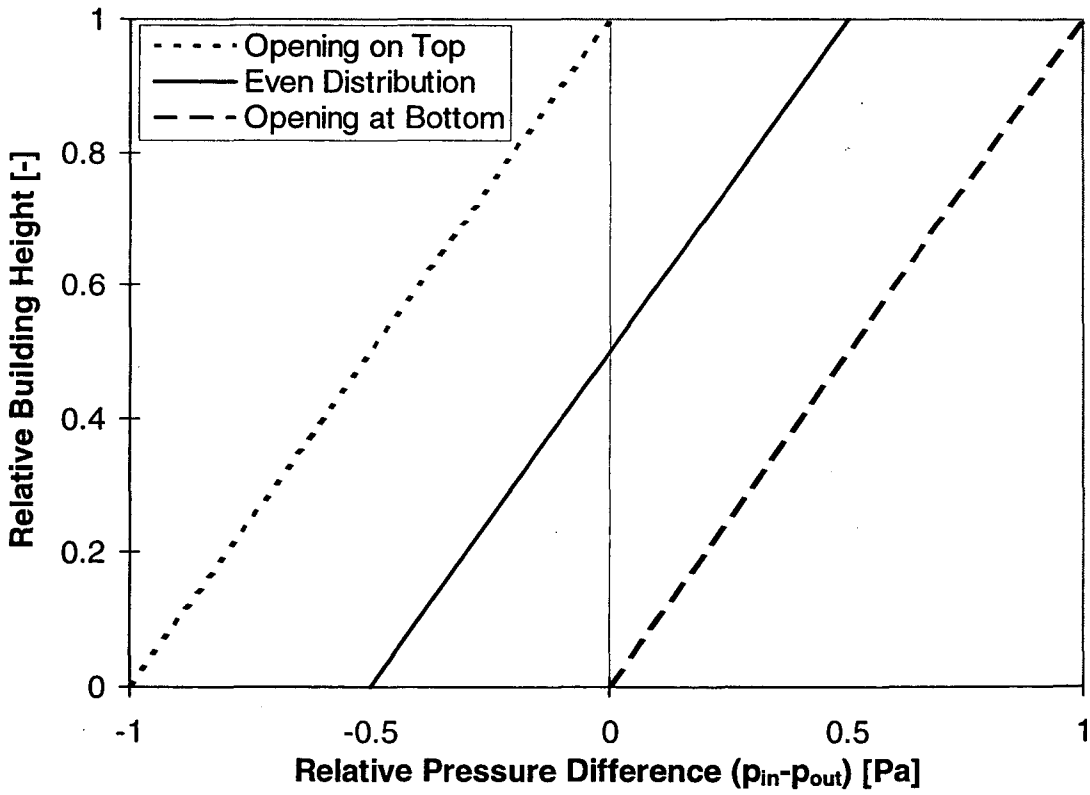

Figure 8: *Dimensionless pressure as a function of height for three different permeability distributions with ambient air cooler than air inside the shaft*

Figure 8 shows the pressure distribution resulting from the stack effect for three different opening situations in winter i.e., when ambient temperature cooler than

air temperature inside the building shaft. If all the leakage is located at the top of the building shaft, the pressure difference on the top is zero and the bottom experiences the maximum negative pressure difference between inside and outside. If all the leakage is concentrated at the bottom of the shaft, the pressure difference at the bottom of the shaft is zero, and the top experiences maximum overpressure. If leakage occurs in the middle of the shaft or is evenly distributed over the height of the shaft, the neutral pressure zone is in the middle of the shaft. The top experiences an overpressure, and the bottom experiences an underpressure of the same magnitude.

The stack effect (or thermal buoyancy) can be calculated by integrating Bernoulli's equation, assuming no wind:

$$(p_{out} - p_{in})_{stack} = g(\rho_{in} - \rho_{out})(z - npl)$$

where

$(p_{out} - p_{in})_{stack}$ = pressure difference due to stack effect [Pa],

g = constant of gravity [m/s^2],

$(\rho_{in} - \rho_{out})$ = density difference between outside and inside air column [kg/m^3],

and

$(z - npl)$ = distance between height z and neutral pressure level [m].

MECHANICAL VENTILATION

Mechanical ventilation can be included in this flow network by treating the duct system like the other flow paths in the building. The fan can be described as the source of pressure differences, lifting the pressure level between two joints according to the fan's characteristic curve (Feustel and Esdorn 1982).

Air Flow Components

CRACK FLOW

The one air-flow component covered by all air flow models found in the review process (Feustel and Kendon 1985; Feustel and Dieris 1992) is the crack. Air flow through a crack is always a mixture of laminar, turbulent, and transition flow. The proportion of each depends on the shape of the crack and the pressure difference on either side of the crack.

The power law equation is widely used to express the air flow characteristics of cracks:

$$Q = C_Q(\Delta P)^n .$$

This numerical representation is simple and meaningful. It shows that the air flow Q depends on the pressure difference ΔP; however, this equation does not take into account the influence of the air properties and the air-flow rate. Correction factors to account for these influences were introduced to the simple

power law equation in the COMIS Fundamentals (Feustel and Raynor-Hooson1990).

The classification of cracks helps to determine the correction factors and to determine the air leakage coefficient C_Q and the pressure exponent n. Cracks are either classified according to their component type or their physical behavior. As the types of cracks in a specific building are usually not known, the latter method is not practical for air leakage calculations for real buildings.

In air-flow simulations, building components (e.g., windows, walls, closed doors) are often treated as single leakages. This has the advantage of reducing the input requirement, but reduces the accuracy of the simulation result because the air-flow is represented by only one set of boundary conditions (e.g., thermal gradients over the height of the component are neglected).

FLOW THROUGH VERTICAL LARGE OPENINGS

Air flow through large openings (e.g., open doorways or open windows) is a main contributor to the transfer of air, pollutants and thermal energy from one zone of a building to another zone or to the outside. In most circumstances, thermal differences and/or differences in thermal gradients on both sides of a large opening will cause two-way flows. The prediction of air flows through large openings is difficult. Although good agreement exists in the literature regarding prediction of gravitational flows through large openings in steady-state conditions, large uncertainty remains regarding the definition of the discharge coefficient (Allard and Utsumi 1992).

Air flow through large openings involves a number of different physical phenomena, including steady-state gravitational flows, fluctuating flows resulting from wind turbulence, and recirculation flows caused by boundary layer effects in a thermally driven opening (Allard and Utsumi 1992). The general description of gravitational air flow through a vertical opening is shown in **Figure 9.** Allard and Utsumi show that a large vertical opening can have two, one, or zero neutral pressure levels. For large openings inside buildings, we most often find one neutral pressure level close to the middle of the opening's height.

For large openings incorporated COMIS calculates the mass flow and its derivative for both flow directions. Density profiles in neighboring zones are represented by pressure or density values at the bottom and top of the opening and at several levels spaced equal distances apart within the opening. The mass flow is calculated for each level. The total flow is obtained by summation of the flows for the whole opening (Dorer 1995). The air flows can be calculated for the following cases:

- **closed large opening:** In this case, the air flows from the cracks at the bottom and top of the component is calculated according to their pressure differences. The air flow for the vertical cracks is calculated by the summation of the flows over the vertical height.
- **normal rectangular vertical openings:** The calculation procedure described above is used. The discharge coefficient, which takes into account the

contraction of the flow resulting from the existence of the opening, can be either defined by the user or calculated by COMIS.

- **horizontally pivoted window:** The flow direction is assumed to be perpendicular to the plane of the opening; the air flow is integrated over the vertical dimension of the window.

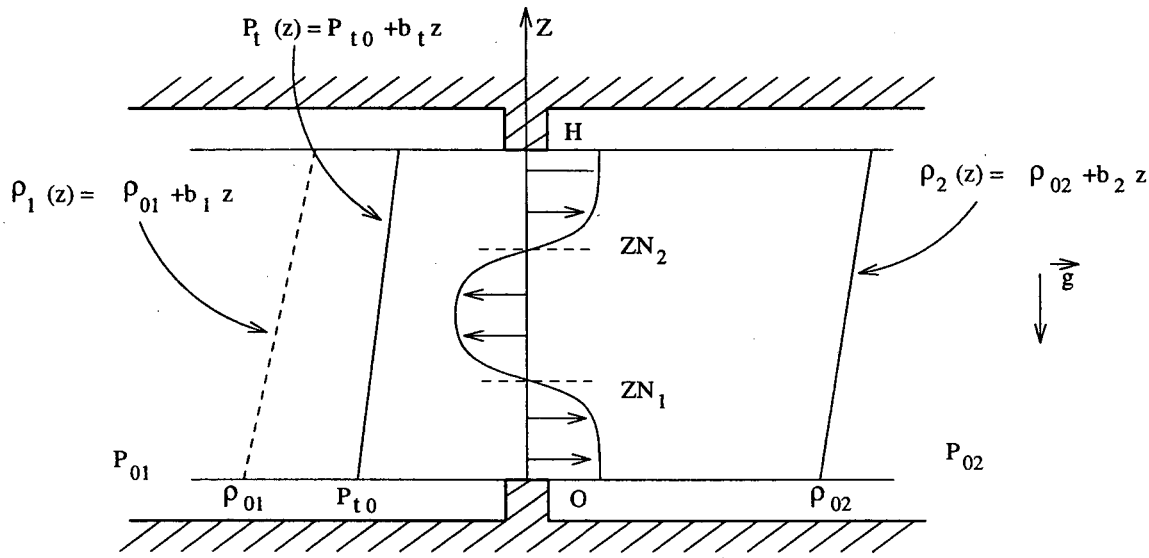

Figure 9: *Description of the general problem of gravitational flow through vertical large openings; Index 0 = Reference Height, Index 1 = Zone 1, Index 2 = Zone 2, Index t = effect of turbulence (Alllard and Utsumi 1992)*

COMIS also includes a routine to calculate bouyancy-driven air flow through single-sided ventilation (van der Maas 1992). This is the only case where the changing thermal properties of a room are taken into account. The driving factor here is a temperature difference between the room and the outside. When a window is open, the room air temperature is being calculated as a function of the initial temperatures specified by the user, the thermal properties of the zone envelope, and the length of time during which the window is open.

Window opening angle can be calculated based on the weather data (outdoor air temperature and wind velocity).

The simulation of large vertical openings in a building's facade was evaluated by a team of scientists from Belgium, France, and Greece (Dascalaki et. al 1998) for single-sided ventilation and cross-flow ventilation. For single-sided ventilation at low wind speeds, COMIS predicts the air flows with satisfactory accuracy relative to the measured data. The cross-flow experiments performed at low wind speeds also show good agreement with COMIS' results. However, Dascalaki et. al. report that inaccuracies in pressure and discharge coefficients may cause significant errors in estimating air flows between the outside and internal zones.

DUCTS

Pressure losses through duct work are calculated based on friction losses described by Moody (1944) and dynamic losses resulting from flow disturbances caused by fittings that change the path and/or area of air flow:

$$\Delta P_{loss} = \Delta P_{friction} + \Delta P_{fittings}$$

$$\Delta P_{friction} = \lambda \frac{l}{d} P_{dynamic}$$

where

$\Delta P_{friction}$	= friction losses in the duct [Pa],
λ	= dimensionless friction factor [-],
l	= length of the duct [m],
d	= diameter of the duct [m], and
$P_{dynamic}$	= dynamic pressure of the air flow [Pa].

Within the region of laminar flow (Reynolds number less than 2,000), the friction is a function of the Reynolds number only, and can be written as:

$$\lambda = \frac{64}{\mathrm{Re}}$$

where

Re	= dimensionless Reynolds number [-].

For turbulent flow (Reynolds numbers greater than 10,000), the friction factor depends on the Reynolds number, duct surface roughness, and internal protuberances (such as joints) and is calculated by Colebrook's equation:

$$\frac{1}{\sqrt{\lambda}} = -2\log\left[\frac{\varepsilon}{3.75}d + \frac{2.51}{\mathrm{Re}}\sqrt{\lambda}\right]$$

where

ε	surface roughness [m].

Because this equation cannot be solved explicitly for λ, we use an approximate explicit equation from Moody (1944):

$$\lambda = \left\{1 + \left[20000\frac{\varepsilon}{d} + \frac{10^6}{\mathrm{Re}}\right]^{1/3}\right\}.$$

Dynamic losses due to fittings are expressed as:

$$\Delta P_{fittings} = \zeta \times P_{dynamic}$$

where

ζ	= dimensionless coefficient [-].

Fittings included in COMIS are entries, exits, transitions, and junctions. The dimensionless coefficient ζ, which has the same value in dynamically similar streams (i.e., streams with geometrically similar stretches, equal values of Reynolds number), has been obtained from engineering handbooks (ASHRAE 1985; Hönmann 1987).

In COMIS, the flow through a duct is modeled as the power law function. Because friction along the duct is different for laminar, turbulent, and transitional regions, the flow coefficient C_Q and the exponent n are calculated by means of iteration (Feustel and Raynor-Hoosen 1990). Because of the nonlinear interdependency of flows in the branches of a junction, duct work with many functions requires more iterations. A flow path in which resistance is dominated by pressure drops in the junction might make a system unstable.

PASSIVE STACKS

A passive stack component of COMIS was developed in response to the request of IEA-ECB's Annex 27 "Residential Ventilation Systems"[3]

A passive stack forms a link from a building zone to the outside (roof) and includes the following elements:

- a grille or opening, visible in the room, mounted on the duct;
- a duct, which is round or rectangular; and
- a cowl (hood) at the top of the duct outside.

The pressure loss for the passive stack is defined as follows:

$$\Delta P = \frac{\rho}{2}\left\{\left[\frac{q_v}{A_{grille}}\right]^2 + \left[\frac{q_v}{A_{duct}}\right]^2\left[\frac{\lambda L}{D}+\zeta\right]\right\}\ldots + \frac{q_v}{q_1}\sqrt{\left[\frac{\rho_{out}}{2}v_{meteo}{}^2\left(-Cp_{cowl}\right)\right]}$$

where

q_v	= flow through the vertical duct [m^3/s],
q_1	= flow at cowl at 1 Pa [m^3/s],
A_{grille}	= free flow area of the grille [m^2],
A_{duct}	= free flow area of the duct [m^2],
v_{meteo}	= velocity at roof height [m/s], and
Cp_{cowl}	= pressure coefficient resulting from cowl [-].

The last term accounts for the extra pressure loss resulting from the presence of the cowl. "q_1" The flow through the cowl at the pressure of 1Pa is q_1, calculated as follows:

[3] IEA-ECB: International Energy Agency, Energy Conservation in Buildings and Community Systems program

$$q_1 = A_{duct}\sqrt{\left(\frac{2}{\rho\zeta}\right)}.$$

FANS

Fans are a source of pressure differences, lifting the pressure level between two zones. In COMIS, fans are described by the polynomial fan curve either provided by the user or approximated by COMIS from a set of volume flow/pressure data pairs. In order to avoid unstable fan performance in the model, the flow/pressure relationship outside the range given by data pairs is assumed to be of linear character (see **Figure 10**).

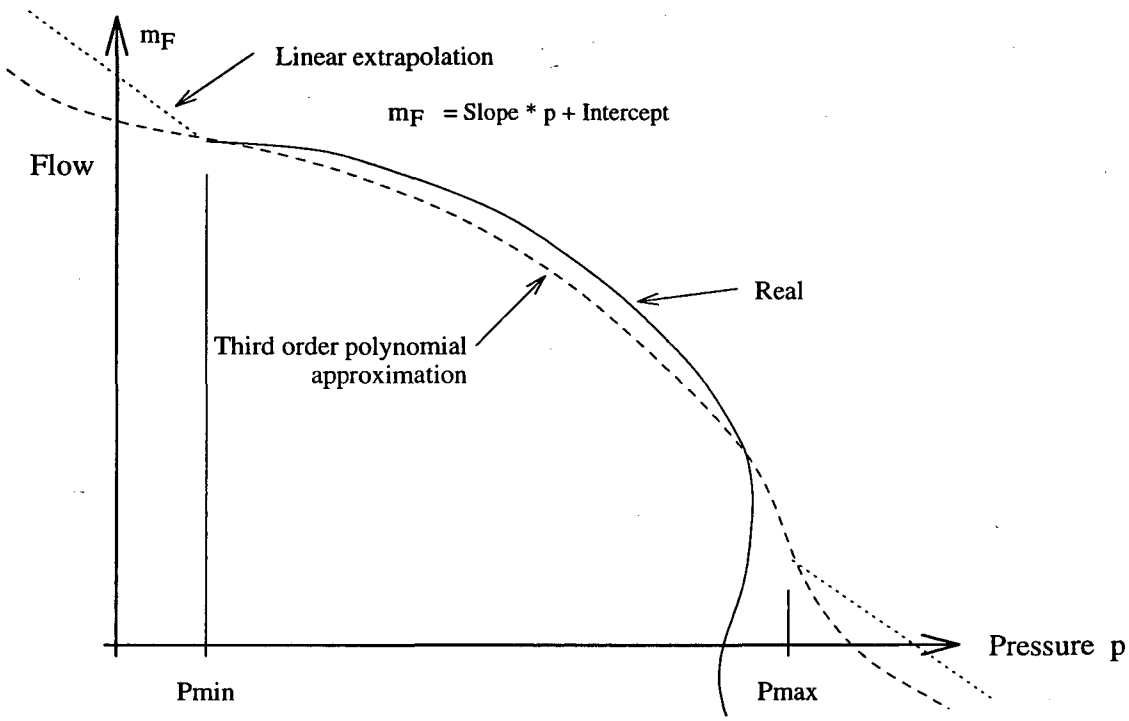

Figure 10: *Fan curve approximation using coefficients (Feustel and Smith 1998)*

Flow through the fan is calculated for deviating values of fan speed or air density according to fan laws. Fan speed can be changed by means of a fan schedule, which allows a change of fan speed to change at any time during the simulation period.

Outside the specified range of fan performance, a linear approximation is used to ensure that the network solver will find a valid solution and not become stuck outside the correctly approximated curve.

FLOW CONTROLLERS

Four types of flow controllers are distinguished; these four, represent most of the available dampers or regulators that respond to pressure drop or (duct) flow.

Controllers with temperatures as input must be simulated with the schedules, which is not an ideal modeling solution.

The basic premise of controllers is that they have an opening through which the air flows. At higher pressures, a flap or valve may throttle the flow by gradually closing the opening. The flow controllers' performance is divided into three pressure ranges (see Feustel and Smith 1998).

Range 1:
At low pressures the controller is fully open and not blocked by either flap or valve. This position is simulated with a normal crack flow equation.

Range 2:
Above a certain pressure, a moving flap or valve will decrease the controller's opening, limiting the flow or keeping it roughly constant. This position is simulated either by a single constant flow rate or with a curve approximated by a polynomial. The transition point between range 1 and range 2 is simply defined in the program by the intersection of the two curves. This curve or constant flow will be maintained until it intersects with the curve from range 3.

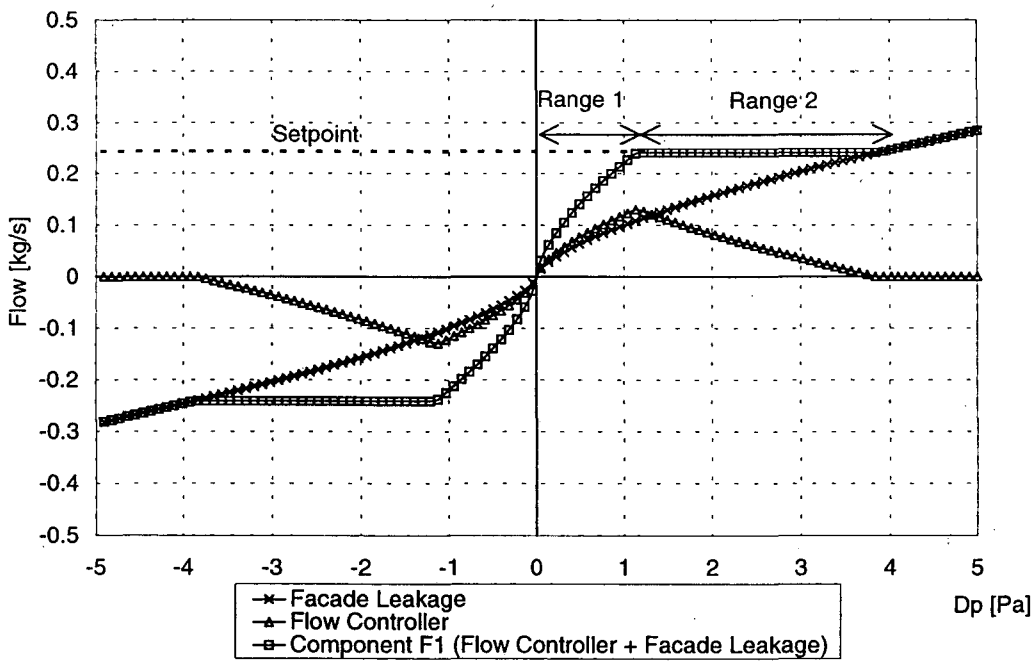

Figure 11: *Performance of flow controller (F1 = ideal symmetrical) (Feustel and Smith 1998)*

Range 3:
At high pressures the controller flap or valve may:
-close no further or have leaks
-close faster, reducing the flow at increasing pressure to almost zero.

Like range 2, range 3 is simulated with a polynomial.

There are four different flow controllers in COMIS; each of them provides a different air flow performance as a function of pressure difference. **Figure 11** shows the performance of an ideal symmetrical flow controller in conjunction with façade leakage.

Kitchen Hood

COMIS models kitchen hoods in different ways. Kitchen hoods can be either fan operated or stack operated. The hood itself can be simulated by means of a set of power law equations (i.e., by using the crack component) or by using a component that calculates the spread of pollutants into the zone (see **Figure 12**).

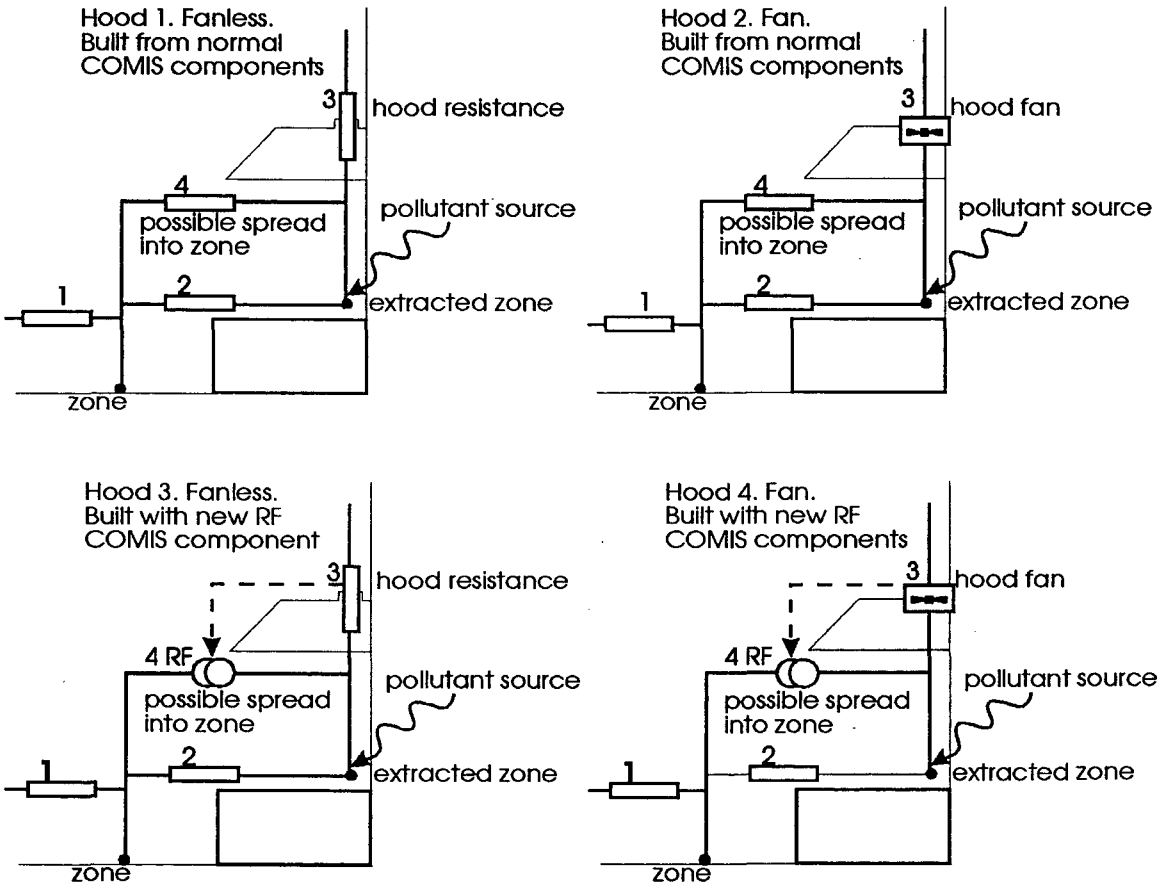

Figure 12: *Schematics of Kitchen Hoods as modeled in COMIS (Phaff 1996) (Numbers 1,2,3 and 4 are flow paths between zones.)*

In the latter case, the spread of pollutants will be calculated using spread characteristics as a function of the exhaust flow of the hood. The spread characteristics (hood efficiency) must be provided by the user. These data are often available from kitchen hood manufacturers (Feustel and Smith 1998).

USER-DEFINED AIR-FLOW COMPONENTS

COMIS allows the user to define air-flow components. The characteristics of these components need to be provided in terms of data pairs describing the flow/pressure relationship. With this air-flow components that are not standardly included in the program can thus be added.

Other Program Features

TIME STEP

A time step is the period between events during a simulation. Simulations are performed for a time period defined by a start and stop time provided by the user. COMIS works with two different time steps: one for the air-flow calculations and another for calculation of pollutant transport. As air flows are quasi-steady-state phenomena, the time step used for air-flow calculations is based only on "external events," which are schedules provided by the user. The time step is determined by the change of boundary conditions with time, i.e., weather data, opening configuration, fan schedule, etc.

Pollutant transport and the related buildup or decay of contaminant concentrations are not steady-state physical phenomena. Therefore, the time step is calculated based on the shortest time constant of all zones within a building for a particular simulation configuration (Feustel and Raynor-Hooson 1990).

ZONE LAYERS

A zone can be divided vertically into several sub-zones (layers). Layers allow for zones with more than one gradient for zone temperature and/or humidity (e.g., shafts, staircases). Layers may also be used to account for different sources or sinks in different heights of a zone. There is no limit to the number of layers that can be specified in a zone.

SCHEDULES

A series of events for a particular parameter are described by schedules. Schedules describe the time of an event and the event itself. COMIS provides the following options for schedules:

> weather data (wind velocity, wind direction, air temperature, absolute humidity, barometric pressure), window schedule (window opening fraction), fan schedule (fan speed factor), zone temperature, absolute humidity, sink schedule (for up to five pollutants), source for (up to five pollutants), multi-schedule (for up to ten parameters with a common time step).

The time steps for all these schedules can be variable, ranging from a second to the length of the simulation period. Schedules can either be included in the COMIS input file or provided by separate schedule files. In the latter case, the COMIS input file only contains the name(s) of the schedule file(s).

CONTAMINANT TRANSPORT

Besides calculating air flow between zones, COMIS also calculates the transport and distribution of up to five contaminants. Simulation of contaminant transport in a multizone building leads to the definition of mass balance equations for each pollutant considered in each zone, based on the assumption that the pollutant concentration is well mixed in a zone and is transported from zone to zone by the flow of air. COMIS allows for filter effects for all air-flow components; these effects can represent a solid absorption along the path or any kind of reaction (chemical reaction, phase change, etc.) resulting from contact of the pollutant with a solid material as it flows from one zone to another (Feustel and Smith 1990).

Although the air flow in buildings can be assumed to be steady state, contaminant transport is a dynamic effect. Therefore, it is critical to use a time step short enough to represent the dynamics. COMIS calculates the time step for contaminant transport as a function of the shortest time constant of all zones considered. Therefore, the critical zone in a building for this calculation will have a small volume but a high air flow. When duct work is realistically simulated, this critical zone is often part of the duct work.

OUTPUT OPTIONS

COMIS provides a variety of output options. Besides the basic option, which provides air-flow and pollutant transport data for each time step, data can be recorded or calculated in the form of tables. Calculations include the air change rates for individual zones and/or the whole building, mean age of air, the air change efficiency of the building, and the room air change index. It is also possible to have mean values for the whole simulation period being calculated and reported (Dorer and Weber 1995).

The ventilation heat loss energy, based on the incoming air temperature and the temperature difference between inside and outside of the building, is also calculated. For zones with temperature gradients, the temperature at the link is considered.

USER INTERFACE

Several interfaces were developed for COMIS. The simplest is the FORTRAN program COMIN. This program reads and writes COMIS input files and allows the addition, change, and deletion of input data. COMIN is hardware-independent but bothersome to work with, so other interfaces, COMERL, IISiBat and XCOMIS were developed.

COMERL offers an alphanumeric, DOS™-oriented user interface allowing the creation or modification of COMIS input files using a specific task-adapted editor. A data base for air flow components (e.g., cracks, windows, HVAC components) is integrated into COMERL. The pre- and post-processor programs COMIN and COMOUT as well as the simulation program COMIS can be run from within the shell (Dorer et al. 1995).

IISiBat is the Intelligent Simulation Environment (ISE) graphics interface adapted for COMIS. It provides a sophisticated graphical environment that runs on PCs or workstations and allows the user to enter information in a straightforward way. IISiBat provides both inexperienced and advanced users with tools that can calculate the dynamics of complex systems.

The ISE allows sharing of data between various simulation tools and coupling of simulation tools; it also includes built-in checking and helping functions. IISiBat includes the model documentation in the standard format PROFORMA (Pelletret et al. 1992).

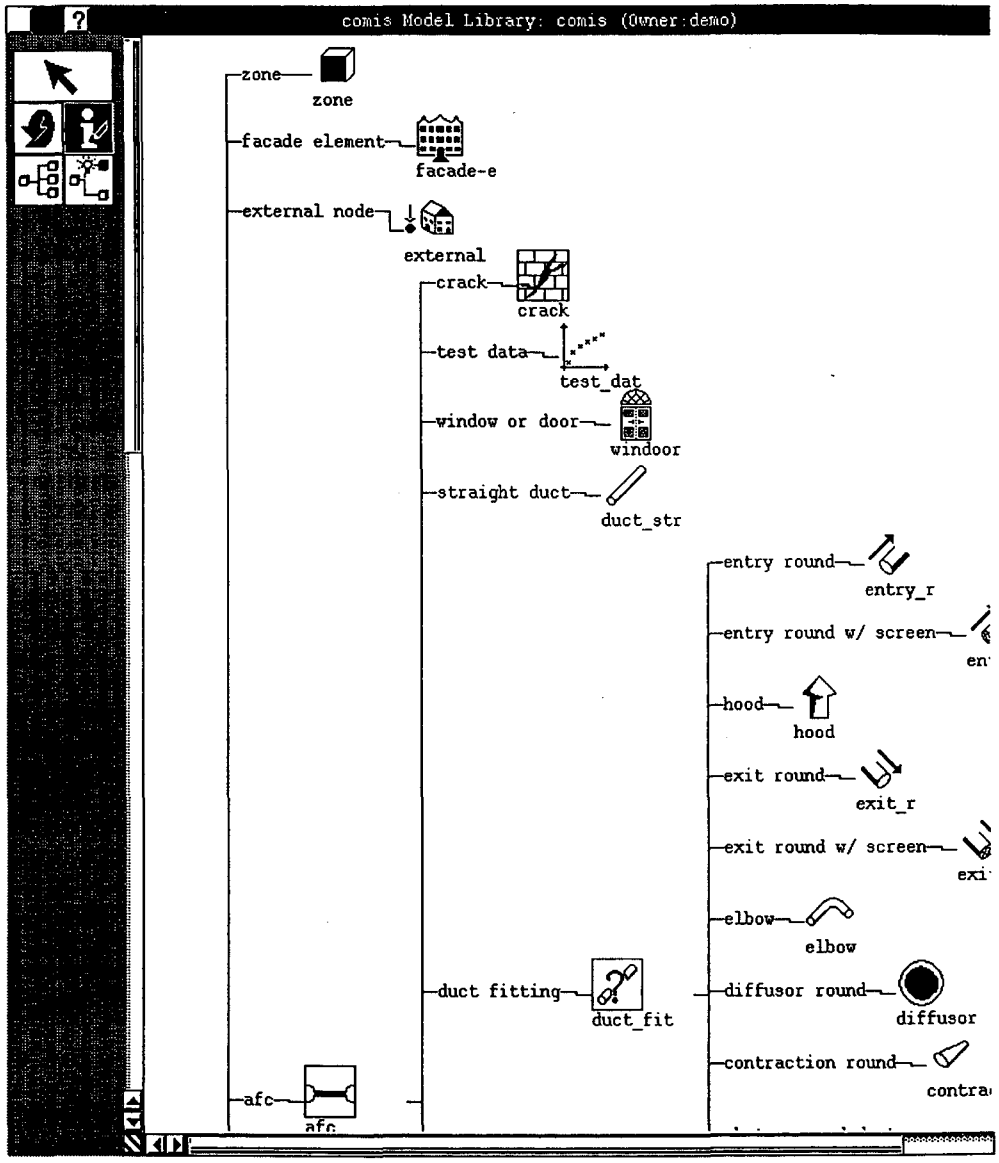

Figure 13: *IISiBat model library (Keilholz 1997)*

Components and projects are stored in object-oriented libraries. Air-flow components are arranged in a "tree structure," as illustrated for duct fittings in **Figure 13**. When a family of components (e.g., duct fittings) is selected, the tree develops to show various component types. Physical properties are attached to each component. **Figure 14** shows an air-flow network with the boundary conditions as developed with IISiBat.

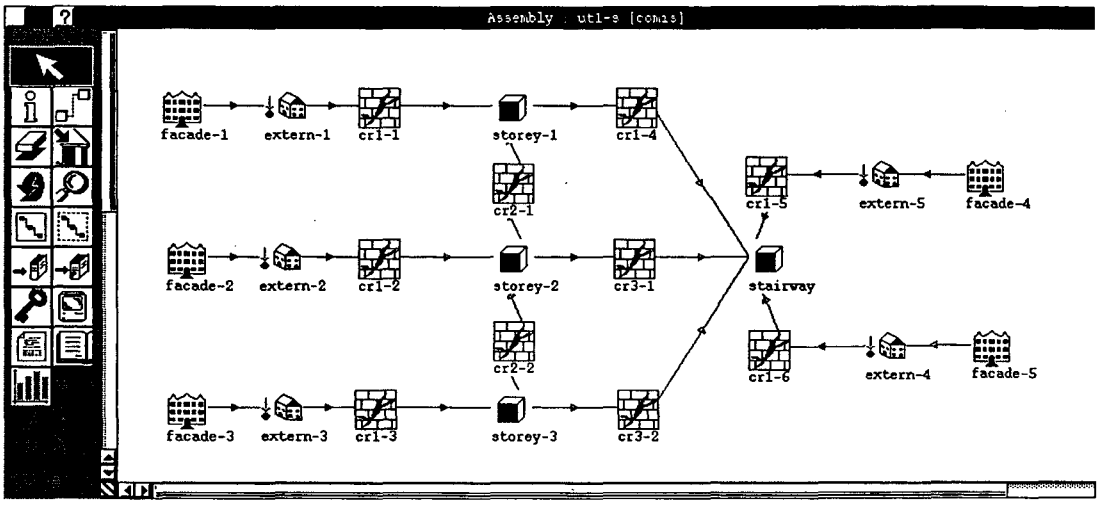

Figure 14: *Air-flow network for a three-story building with a common staircase (Keilholz 1997)*

A building described by its network of air flow components is constructed by assembling joining components together in the assembly window. If a building is too complex to be displayed in all its details, the system can be simplified by using "macro-components." Whole building floors with all their air-flow paths and boundary conditions can be displayed as single "macro-components" (Pelletret 1996). Once the network is ready for simulation, the calculation process is started from IISiBat.

XCOMIS is part of the attempt to provide a user-friendly interface (Morgner 1997). It uses a GUI (graphical user interface) but does not provide a graphical representation of the air-flow network. This user-interface represents the input sequence of the conventional COMIS input file, but it allows use of a more sophisticated representation of the input file than COMIN or COMERL. Besides input checking routines and default values, XCOMIS also provides a wide variety of input units. One of the input checking routines is the graphical representation of input values used for fan curve approximation (see **Figure 15**).

XCOMIS is being developed in Tcl/Tk[4] (Ousterhout 1994), so it can be used with the UNIX operating system as well as with Microsoft Windows 95™ and Microsoft Windows NT™.

[4] Tcl = tool command language, Tk = tool kit for the Xwindow system

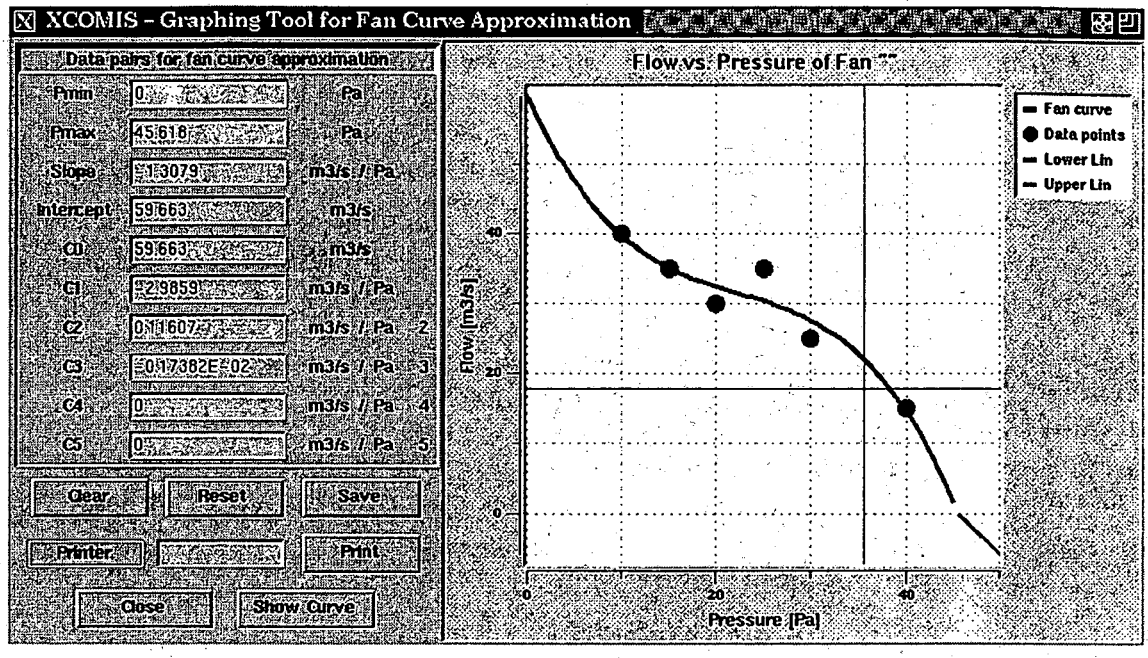

Figure 15: *XCOMIS graphic tool for fan curve approximation (Morgner 1997)*

Evaluation of Multizone Air-Flow Models

There is a lack of measured infiltration and ventilation data for whole buildings. These data are essential for validating air-flow models. Critical variables must be identified for different building types in order to develop more accurate input data and, ultimately, more accurate models. Wind pressure coefficients, for example, need further study; the collating of existing data could help our efforts in simplifying data requirements.

The difficulty of measuring infiltration in buildings under controlled boundary conditions means that none of the multizone models has been validated properly, if at all (Scartezzini et. al 1987). The possibility of doing piecemeal validations of certain algorithms has been considered (e.g., the algorithms for air flow through open doorways or air flow through cracks). Measuring a few zones of the whole structure would effectively test existing models. However, validation of a model's performance for whole buildings is preferable, as was done for COMIS.

The goal of the IEA's Annex 23[5] was to provide a reliable, accurate, practical, and user-friendly multizone air flow model. A variety of tests were performed to make sure that COMIS contains no numerical errors; COMIS simulation results were compared with more than 50 benchmarks for which either an analytical or a numerical solution was obtained. Each of these test cases was developed to check a particular feature of the program. These tests were repeated for each

[5] International Energy Agency's Energy Conservation in Buildings and Community Systems implementing agreement, Annex 23 "Multizone Air Flow Modeling"

individual program update to be sure that a model improvement did not interfere with already tested program features.

Furthermore, two user tests were developed as a joint contribution by the Air Infiltration and Ventilation Centre and researchers in Switzerland. The first test represents a very simple network in which all openings and pressure boundary conditions are defined. This test and the comparison of simulation results with analytical solutions enabled inconsistencies and problems in the code to be quickly identified and rectified.

A second test was performed to evaluate the influence, of the user on the program's accuracy. This test helped us to develop the program documentation, particularly the User's Guide. The results showed clearly that the user's ability is critical in securing reliable predictions (Liddament 1996).

COMIS was also checked by means of model intercomparison (Fürbringer et. al 1996). Fourteen other simulation programs[6] were used by the research groups involved in evaluating COMIS, and results were compared. Because different programs have different features, the objectives for each intercomparison had to be adapted so that the models to be compared could simulate the same physical phenomenon. Because all programs use similar algorithms, and simulations were performed with identical input data, so the results fall within a very narrow band.

The comparison of results between the model and in-situ tests was an important part of the work done to develop COMIS. Nine studies were performed, using results from tracer gas tests for single-family houses, test cells, flats, and small office buildings. These results were compared with results obtained by numerical simulation. For each case, a sensitivity analysis was performed, not only to learn about the uncertainties in the measurements but also about the confidence intervals of the simulations, which result from uncertainties in the input data (Fürbringer et. al. 1996).

How to Obtain IISiBat/COMIS

COMIS and its user interface IISiBat together with all the necessary user's guides can be downloaded for free using the following world wide web address:

http://www-epb.lbl.gov/comis/

Conclusions

User-friendliness and confidence in a model are prerequisites for its use. Annex 23 was adopted by the International Energy Agency to work specifically towards this goal. The ISE user interface developed for COMIS is a significant step towards "user-friendliness." IISiBat provides a graphical representation of the nodal model with all the boundary conditions and air flow components in use. Additionally, IISiBat functions as a program shell; simulations and output representation can be controlled from within the interface.

[6] Models compared include AIDA, AIRNET, ASCOS, BREEZE, BREVENT, CBSAIR, CONTAM93, ESP, LBL, MZAP, NORMA, PASSPORT AIR, TURBUL, and VENCON.

A significant effort was made towards the evaluation of the model. Besides benchmark testing, and model intercomparison, in-situ measurement exercises were performed for several building structures. With this effort, COMIS is probably the only multizone air flow model which has been evaluated at different levels.

The international authorship and the efforts to maintain the program in the future have helped to establish COMIS as a standard for air flow/pollutant transport models.

Future developments include the coupling of COMIS with the thermal building simulation model EnergyPlus and the incorporation of the aerosol/particle deposition model for rooms. A zonal model currently developed at Concordia University will also be included into COMIS.

Acknowledgments
This report was supported by the Assistant Secretary for Energy Efficiency and Renewable Energy, Office of Building Technology, of the U.S. Department of Energy under Contract No. DE-AC03-76SF00098.

References

AIVC TN 31, 1991. "Air Flow Patterns: Measurement Techniques," Air Infiltration and Ventilation Centre

ASHRAE 1985. *Handbook of Fundamentals*, Chapter 22, American Society of Heating, Refrigerating and Air-Conditioning Engineers, Atlanta, GA

ASHRAE 1989. *Handbook of Fundamentals*, Chapter 14, American Society of Heating, Refrigerating and Air-Conditioning Engineers, Atlanta, GA

DIN 4701, 1983. "Regeln für die Berechnung des Wärmebedarfs von Gebäuden, Teil 1: Grundlagen der Berechnung," Beuth Vertrieb Berlin

Allard F., and Y. Utsumi, 1992. "Air Flow through Large Openings," *Energy and Buildings*, 18, 133-145

Davenport, A.G., 1960. "A Rational for the Determination of Basic Design Wind Velocities," ASCE-Proceedings, Vol. 86, 36 -68

Diamond, R.C., and H.E. Feustel, 1995. "Ventilation in High-Rise Residential Buildings," In Proceedings, *16th Air Infiltration and Ventilation Conference*, Palm Springs, CA

Dascalaki, E., M. Santamouris, M. Bruant, C.A. Balaras, A. Bossaer, D. Ducarme, and P. Wouters, 1998. "Modeling Large Openings with COMIS," *Energy and Buildings,* same Volume

Dorer, V., 1995. "New Large Vertical Opening and Single-Sided Ventilation Routines in COMIS," Internal Annex Report, EMPA Dübendorf

Dorer, V. and A. Weber, 1995. "Output Options for COMIS," Internal Annex Report, EMPA Dübendorf

Dorer, V., F. Huck, and A. Weber, 1995. "COMERL PC-based User Interface for the Multizone Air Flow and Contaminant Transport Model COMIS," EMPA Dübendorf

Esdorn, H., 1958. "Luftdurchlässigkeit der Fenster und Druckverteilung im Gebäude," *Das Hochhaus der BASF, Planung, Ausführung, Erfahrungen*, J. Hoffmann, Stuttgart

Esdorn, H., H.E. Feustel, K. Giese, and M. Schmidt, 1977. "Bauliche und lüftungstechnische Maßnahmen gegen unerwünschten Luftaustausch zwischen Räumen unterschiedlichen hygienischen Standards," Schlußbericht TP F2/2, Sonderforschungsbereich 159, Krankenhausbau, Technische Universität Berlin

Feustel, H.E., 1996. "Annex 23 - An International Effort in Multizone Air Flow Modeling," In Proceedings, *ROOMVENT '96*, Yokohama

Feustel, H.E., 1984 "Beitrag zur theoretischen Beschreibung der Druck- und Luftmassenstromverteilung in natürlich und maschinell gelüfteten Gebäuden," *Fortschritt-Berichte der VDI Zeitschriften*, Reihe 6, Nr. 151, VDI Verlag, Düsseldorf

Feustel, H.E., A. de Almeida, and C. Blumstein, 1992. "Alternatives to Compressor Cooling in Residences," *Energy and Buildings*, Vol. 18, No. 3-4

Feustel, H.E., F. Allard, V.B. Dorer, M. Grosso, M. Herrlin, M. Liu, J.C. Phaff, Y. Utsumi, and H. Yoshino, 1989. "The COMIS Infiltration Model," in Proceedings, *Building Simulation '89*, The International Building Performance Simulation Association, Vancouver

Feustel, H.E. and V.M. Kendon, 1985. "Infiltration Models for Multicellular Structures," Energy and Buildings, Vol. 8, No. 2

Feustel, H.E., H. Esdorn, 1982. "Mass Flow Distribution in High-Rise Buildings with Forced Ventilation Systems," In Proceedings, *International Conference on System Simulation in Buildings*, Liege

Feustel, H.E. and J. Dieris, 1992. "A Survey on Air Flow Models for Multizone Structures," *Energy and Buildings*, Vol. 18

Feustel, H.E., and A. Raynor-Hooson (Editors), 1990. "COMIS Fundamentals," Air Infiltration and Ventilation Centre, Technical Note 29, Lawrence Berkeley Laboratory Report, LBL-28560

Feustel, H. E., and M.H. Sherman, 1989. "A Simplified Model for Predicting Air Flow in Multizone Structures," *Energy and Buildings*, Vol. 13, No. 3, Lawrence Berkeley Laboratory Report, LBL-22325

Feustel, H.E., and B.V. Smith (Editors), 1998. "COMIS 3.0 User's Guide," http://www-epb.lbl.gov/comis/

Fürbringer, J.M., C.-A. Roulet, and R. Borchiellini, 1996. "Annex 23 Subtask II&III Report - Evaluation of COMIS," Vol. 1 and Vol. 2, EPFL Lausanne, Switzerland

Grosso, M., 1992. "Wind Pressure Distribution around Buildings; a parametrical Model," *Energy and Buildings*, 18, 101-131

Herrlin, M., 1990. "Solution Methods for Air Flow Networks," in COMIS Fundamentals, Lawrence Berkeley Laboratory Report, LBL-28560

Herrlin, M., 1987. "Luftstromning I byggnader - en berakningsmodell," Division of Building Services Engineering, Royal Institute of Technology, Stockholm, Sweden

Hönmann, W., 1987. "Taschenbuch für Heizung und Klimatechnik," R. Oldenburg Verlag, München, Wien

Jackman, P. J.,1970. "A Study of Natural Ventilation of Tall Office Buildings," *Inst. Heat Vent. Eng.*, Vol. 38

Keilholz, W., 1997. "IISiBat/COMIS 3.0 User's Guide," http://evl.cstb.fr/iisibat.html

Kula, H.-G., and H.E. Feustel, 1988. "Review of Wind Pressure Distribution as Input Data for Infiltration Models," Lawrence Berkeley Laboratory Report, LBL-23886

Liddament, M.W., 1986. "Air Infiltration Calculation Techniques - an Applications Guide," Air Infiltration and Ventilation Centre, Bracknell, U.K.

Liddament, M.W., 1996. "Two Air Flow Studies Completed," *Air Infiltration Review*, Vol. 17, No. 4, Air Infiltration and Ventilation Centre, Bracknell, U.K.

Matson, N. E., H.E. Feustel, J. L. Warner und J. Talbott, 1994. "Climate-Based Analysis of Residential Ventilation Options: New York State Analysis," In Proceedings, 15th AIVC Conference, *The Role of Ventilation*, Buxton

Moody, L.F., 1944. "Friction Factors for Pipe Flow," ASME Transactions, American Society of Mechanical Engineers, New York

Morgner, S., 1997. "XCOMIS -- Development of a Graphical User Interface for the Multizone Air Flow and Contaminant Transport Simulation Model COMIS," Masters Thesis, Georg-Simon-Ohm Fachhochschule, Nuremberg

Nazaroff, W., H.E. Feustel, A. Nero, K. Revzan, D.T. Grimsrud, M. Essling, and R. Toohey, 1985. "Radon Transport into a Single-Family House with a Basement," *Atmospheric Environment*, Vol. 19, No. 1, Lawrence Berkeley Laboratory Report, LBL-16572

Ousterhout, J.K., 1994. "Tcl and the Tk Toolkit," Addison-Wesley Publishing Company

Palmiter, L., I. Brown, and T. Bond, 1990. "Residential Construction Demonstration Project Cycle II: Infiltration in New All-Electric Homes in the Pacific Northwest," Report prepared for the Washington State Energy Office

Pelletret, R., 1996. "IISiBat - A User Interface for Multizone Modelling (Annex 23)," *News*, International Energy Agency, Energy Conservation in Buildings and Community Systems Programme

Pelletret, R., S. Soubra, W. Keilholz, A. Melouk, 1992. "Annex 23 - Multizone Air Flow and Pollutant Transport Modeling, Subtask 1: The Multizone Air Flow and Pollutant Transport Model developed in the Frame of the IEA Annex 23," in Proceedings *International Symposium - Air Flow in Multizone Structures*, Vol. 1, Budapest

Phaff, J.C., 1996. "Final Report Annex 23 - Multizone Ventilation Models: Participation of TNO Bouw. Examples," TNO Report 96-BBI-R1086

Ross, H.D., and D.T. Grimsrud, 1978. "Air Infiltration in Buildings - Literature Survey and Proposed Research Agenda," Lawrence Berkeley Laboratory Report, LBL-7822

Scartezzini, J.-L., J.-M. Furbringer, C.-A. Roulet, H.E. Feustel, 1987. "Data Needs for Purpose of Air Infiltration Computer Code Validation," In Proceedings, 8th AIVC Conference, *Ventilation Technology - Research and Application*, Überlingen

Sextro, R.G., H.E. Feustel, M. P. Modera, K. L. Revzan, M. H. Sherman, 1993. "A Coupled Multizone Flow and Radon Transport Model of Radon Entry and Concentrations in a Crawlspace House," In Proceedings, *Indoor Air '93*, Helsinki

Sherman, M.H., 1980. "Air Infiltration in Buildings," Lawrence Berkeley Laboratory Report, LBL-10712

Sherman, M.H., 1995. "The Use of Blower-Door Data," *Indoor Air*, Vol. 5, 215-224

Sherman, M.H. and D.J. Dickerhoff, 1994. "Air Tightness of U.S. Dwellings," In Proceedings, 15th AIVC Conference, *The Role of Ventilation*, Volume 1, Buxton, U.K.

Sherman, M.H., H.E. Feustel, D. J. Dickerhoff, 1991. "Description of a System for Measuring Interzonal Air Flows Using Multiple Tracer Gasses," In Proceedings, *Heat and Mass Transfer in Building Materials and Structures*, Hemisphere Publishing Corporation, New York, Washington, Philadelphia, London

Tamura, G.T., and A.G. Wilson. "Pressur Difference caused by Chimney Effect in three high Buildings," *ASHRAE Transactions*, Vol 72, Part II, II.1.1 - II.1.10

van der Mass, K., 1992. "IEA-ECB Annex 20 Technical Report: Air Flow through Large Openings in Buildings," International Energy Agency

Walton, G.N., 1989. "AIRNET - A Computer Program for Building Airflow Network Modeling," United States Department of Commerce, National Institute of Standards and Technology

Walton, G.N., 1994. "CONTAM 93 User Manual," United States Department of Commerce, National Institute of Standards and Technology, NISTIR 5385, 1994

ERNEST ORLANDO LAWRENCE BERKELEY NATIONAL LABORATORY
ONE CYCLOTRON ROAD | BERKELEY, CALIFORNIA 94720

Prepared for the U.S. Department of Energy under Contract No. DE-AC03-76SF00098