LBNL-42371

ERNEST ORLANDO LAWRENCE
BERKELEY NATIONAL LABORATORY

Electromagnetic Fields Due to a Loop Current in a Cased Borehole Surrounded by Uniform Whole Space

Yoonho Song and Ki Ha Lee

Earth Sciences Division

January 1998

REFERENCE COPY
Does Not
Circulate
Bldg. 50 Library - Ref.
Lawrence Berkeley National Laboratory

Copy 1

LBNL-42371

DISCLAIMER

This document was prepared as an account of work sponsored by the United States Government. While this document is believed to contain correct information, neither the United States Government nor any agency thereof, nor the Regents of the University of California, nor any of their employees, makes any warranty, express or implied, or assumes any legal responsibility for the accuracy, completeness, or usefulness of any information, apparatus, product, or process disclosed, or represents that its use would not infringe privately owned rights. Reference herein to any specific commercial product, process, or service by its trade name, trademark, manufacturer, or otherwise, does not necessarily constitute or imply its endorsement, recommendation, or favoring by the United States Government or any agency thereof, or the Regents of the University of California. The views and opinions of authors expressed herein do not necessarily state or reflect those of the United States Government or any agency thereof or the Regents of the University of California.

LBNL-42371

Electromagnetic fields due to a loop current in a cased borehole surrounded by uniform whole space

Yoonho Song* and Ki Ha Lee

Earth Sciences Division
Earnest Orlando Lawrence Berkeley National Laboratory
University of California
Berkeley, California 94720

* on leave from Korea Institute of Geology, Mining and Materials, Taejon 305-350, S. Korea

January 1998

This study was supported by the Assistant Secretary for Fossil Energy, Office of Gas and Petroleum Technologies of the U.S. Department of Energy under Contract No. DE-AC03-76SF00098.

Electromagnetic fields due to a loop current in a cased borehole surrounded by uniform whole space

Abstract

Precise evaluation of electromagnetic (EM) response in steel-cased borehole is an essential first step towards developing techniques for casing parameter evaluation, which would ultimately help evaluating the formation response. In this report we demonstrate a numerical scheme for accurately computing EM responses in cased borehole environment. For improved numerical accuracy we use explicit representations of the electromagnetic spectra inside the borehole, in the casing, and in the formation. Instead of conventional Hankel transform, FFT is used to improve the numerical accuracy. The FFT approach allows us to compute fields at positions very close to the source loop, including the center of the transmitter loop.

Technical description

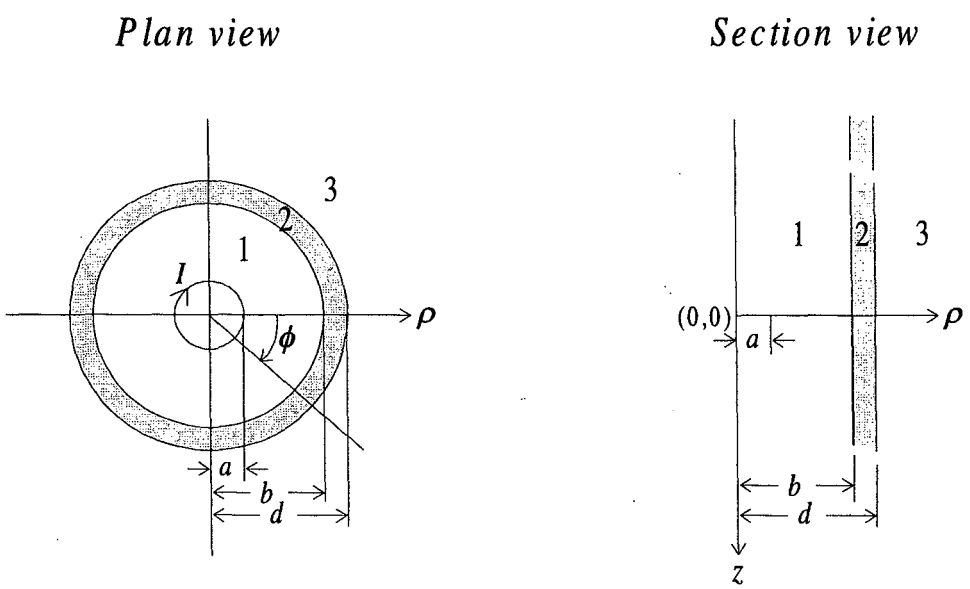

Figure 1. Casing problem. The center of the current ring is at the origin. Medium 1 means the inside of borehole, medium 2 is the casing, and medium 3 is the formation which is the whole space.

Let's assume that the center of the current carrying ring is at the origin of the cylindrical coordinate system. Maxwell's equations are generally expressed in frequency domain as

$$\nabla \times \mathbf{E}(\mathbf{r}) + \hat{z}(\mathbf{r})\mathbf{H}(\mathbf{r}) = 0 \ , \tag{1}$$

$$\nabla \times \mathbf{H}(\mathbf{r}) - \hat{y}(\mathbf{r})\mathbf{E}(\mathbf{r}) = \mathbf{J}_s(\mathbf{r}) \ , \tag{2}$$

where $\mathbf{E}(\mathbf{r})$ is the electric field, $\mathbf{H}(\mathbf{r})$ the magnetic field, $\hat{z}(\mathbf{r}) = i\omega\mu(\mathbf{r})$ the impedivity, $\hat{y}(\mathbf{r}) = \sigma(\mathbf{r}) + i\omega\varepsilon(\mathbf{r})$ the admittivity, •(**r**) the conductivity, •(**r**) the electric permittivity,

•(**r**) the magnetic permeability, and $\mathbf{J}_s(\mathbf{r})$ the source current distribution expressed as (Augustin et al., 1989)

$$\mathbf{J}_s(\mathbf{r}) = \frac{a}{\rho} I(\omega)\delta(\rho - a)\delta(z)\phi \ , \tag{3}$$

where $I(\bullet)$ is the amount of the current impressed, and a is the radius of the current ring.

Because of axial symmetry of the problem, electromagnetic fields have specific directional components as

$$\mathbf{E}(\mathbf{r}) = \{0, E_\phi(\rho,z), 0\} \ , \tag{4}$$

$$\mathbf{H}(\mathbf{r}) = \{H_\rho(\rho,z), 0, H_z(\rho,z)\} \ . \tag{5}$$

Combining equation (1) and (2) with the above symmetric properties, the electric field in the medium j satisfies the following diffusion equation:

$$\left(\frac{\partial^2}{\partial\rho^2} + \frac{1}{\rho}\frac{\partial}{\partial\rho} - \frac{1}{\rho^2} + \frac{\partial^2}{\partial z^2} + k_j^{\ 2}\right) E_{\phi,j}(\rho,z) = \hat{z}_j \frac{a}{\rho} I(\omega)\delta(\rho - a)\delta(z) \ , \tag{6}$$

where wave propagation constant k_j is, when we neglect the displacement current, represented by

$$k_j = \sqrt{-\hat{z}_j \hat{y}_j} = \sqrt{-i\omega\mu_j\sigma_j} \ . \tag{7}$$

Taking Fourier transform of equation (6) about the z-axis yields

$$\left(\frac{\partial^2}{\partial\rho^2} + \frac{1}{\rho}\frac{\partial}{\partial\rho} - \frac{1}{\rho^2} + k_j^{\ 2} - k_z^{\ 2}\right) \tilde{E}_{\phi,j}(\rho,k_z) = \hat{z}_j \frac{a}{\rho} I(\omega)\delta(\rho - a) \ . \tag{8}$$

To get the complementary solution of the above equation, rearranging the left-hand side of equation (8) yields

$$\left\{(\gamma_j\rho)^2 \frac{\partial^2}{\partial(\gamma_j\rho)^2} + (\gamma_j\rho)\frac{\partial}{\partial(\gamma_j\rho)} - [\rho^2 + (\gamma_j\rho)^2]\right\} \tilde{E}_{\phi,j}(\rho,k_z) = 0 \ , \tag{9}$$

with the substitution

$$\gamma_j = \sqrt{k_z^{\ 2} - k_j^{\ 2}} \ . \tag{10}$$

Equation (9) is a typical differential equation, the solution of which is composed of modified Bessel functions. Hence we can express the complementary solution of equation (8) as

$$\tilde{E}_{\phi,j}(\rho,k_z) = -\hat{z}_j a I(\omega)\left\{C_j I_1(\gamma_j\rho) + D_j K_1(\gamma_j\rho)\right\}, \tag{11}$$

where C_j and D_j are the inward and outward reflection coefficients in the j-th medium, respectively. Particular solution of equation (8) or primary electric field is to be obtained using Hankel transform (Appendix), i.e.,

$$\tilde{E}_{\phi}^{P}(\rho,k_z) = -\hat{z}_1 a I(\omega)\cdot\begin{cases} I_1(\gamma_1\rho)K_1(\gamma_1 a) & , \quad \rho < a \\ I_1(\gamma_1 a)K_1(\gamma_1\rho) & , \quad \rho > a \end{cases} . \tag{12}$$

Note that the primary field exists only in the medium 1, that is in borehole.

The reflection coefficients at interfaces of each medium are to be determined by applying the boundary condition, which is the continuity of the tangential electric and magnetic fields at the boundary. The magnetic fields are related to electric fields through curl operation as in equation (1). Again simplifying the mathematics with axial symmetric property yields

$$\tilde{H}_{\rho,j}(\rho,k_z) = \frac{1}{\hat{z}_j}\frac{\partial}{\partial z}\left\{\tilde{E}_{\phi,j}(\rho,k_z)\right\} , \tag{13}$$

and

$$\tilde{H}_{z,j}(\rho,k_z) = -\frac{1}{\hat{z}_j}\frac{1}{\rho}\frac{\partial}{\partial\rho}\left\{\rho\tilde{E}_{\phi,j}(\rho,k_z)\right\} . \tag{14}$$

The boundary condition here reduces to the continuity of horizontal electric fields and vertical magnetic fields at the two boundaries between mud and casing, and between casing and formation. In matrix form,

$$\begin{pmatrix} \mu_1 I_1(\gamma_1 b) & -\mu_2 I_1(\gamma_2 b) & -\mu_2 K_1(\gamma_2 b) & 0 \\ \gamma_1 I_0(\gamma_1 b) & -\gamma_2 I_0(\gamma_2 b) & \gamma_2 K_0(\gamma_2 b) & 0 \\ 0 & \mu_2 I_1(\gamma_2 d) & \mu_2 K_1(\gamma_2 d) & -\mu_3 K_1(\gamma_3 d) \\ 0 & \gamma_2 I_0(\gamma_2 d) & -\gamma_2 K_0(\gamma_2 d) & \gamma_3 K_0(\gamma_3 d) \end{pmatrix}\begin{pmatrix} C_1 \\ C_2 \\ D_2 \\ D_3 \end{pmatrix} = \begin{pmatrix} -\mu_1 I_1(\gamma_1 a)K_1(\gamma_1 b) \\ \gamma_1 I_1(\gamma_1 a)K_0(\gamma_1 b) \\ 0 \\ 0 \end{pmatrix} \tag{15}$$

Solving the matrix equation,

$$C_1 = \frac{1}{|\underline{\underline{\mathbf{A}}}|}\left\{-\mu_1 I_1(\gamma_1 a)K_1(\gamma_1 b)A_{11} + \gamma_1 I_1(\gamma_1 a)K_0(\gamma_1 b)A_{21}\right\} , \tag{16}$$

$$\begin{aligned} C_2 &= \frac{\mu_1\gamma_1}{|\underline{\underline{\mathbf{A}}}|} I_1(\gamma_1 a)\left\{I_0(\gamma_1 b)K_1(\gamma_1 b) + I_1(\gamma_1 b)K_0(\gamma_1 b)\right\} \\ &\qquad \cdot\left\{\mu_2\gamma_3 K_1(\gamma_2 d)K_0(\gamma_3 d) - \mu_3\gamma_2 K_0(\gamma_2 d)K_1(\gamma_3 d)\right\} \\ &= \frac{\mu_1 I_1(\gamma_1 a)}{b|\underline{\underline{\mathbf{A}}}|}\left\{\mu_2\gamma_3 K_1(\gamma_2 d)K_0(\gamma_3 d) - \mu_3\gamma_2 K_0(\gamma_2 d)K_1(\gamma_3 d)\right\} , \end{aligned} \tag{17}$$

$$\begin{aligned} D_2 &= -\frac{\mu_1\gamma_1}{|\underline{\underline{\mathbf{A}}}|} I_1(\gamma_1 a)\left\{I_0(\gamma_1 b)K_1(\gamma_1 b) + I_1(\gamma_1 b)K_0(\gamma_1 b)\right\} \\ &\qquad \cdot\left\{\mu_2\gamma_3 I_1(\gamma_2 d)K_0(\gamma_3 d) + \mu_3\gamma_2 I_0(\gamma_2 d)K_1(\gamma_3 d)\right\} \end{aligned}$$

$$= -\frac{\mu_1 I_1(\gamma_1 a)}{b|\underline{\underline{\mathbf{A}}}|}\{\mu_2\gamma_3 I_1(\gamma_2 d)K_0(\gamma_3 d) + \mu_3\gamma_2 I_0(\gamma_2 d)K_1(\gamma_3 d)\} \ , \tag{18}$$

$$D_3 = -\frac{\mu_1\mu_2\gamma_1\gamma_2}{|\underline{\underline{\mathbf{A}}}|} I_1(\gamma_1 a)\{I_0(\gamma_1 b)K_1(\gamma_1 b) + I_1(\gamma_1 b)K_0(\gamma_1 b)\}$$
$$\cdot\{I_0(\gamma_2 d)K_1(\gamma_2 d) + I_1(\gamma_2 d)K_0(\gamma_2 d)\}$$
$$= -\frac{\mu_1\mu_2}{bd}\frac{I_1(\gamma_1 a)}{|\underline{\underline{\mathbf{A}}}|} \ , \tag{19}$$

where the determinant of the matrix is

$$|\underline{\underline{\mathbf{A}}}| = \mu_1 I_1(\gamma_1 b)A_{11} + \gamma_1 I_0(\gamma_1 b)A_{21} \ , \tag{20}$$

$$A_{11} = \mu_3\gamma_2{}^2 K_1(\gamma_3 d)\{I_0(\gamma_2 b)K_0(\gamma_2 d) - I_0(\gamma_2 d)K_0(\gamma_2 b)\}$$
$$-\mu_2\gamma_2\gamma_3 K_0(\gamma_3 d)\{I_0(\gamma_2 b)K_1(\gamma_2 d) + I_1(\gamma_2 d)K_0(\gamma_2 b)\} \ , \tag{21}$$

$$A_{21} = \mu_2{}^2\gamma_3 K_0(\gamma_3 d)\{I_1(\gamma_2 b)K_1(\gamma_2 d) - I_1(\gamma_2 d)K_1(\gamma_2 b)\}$$
$$-\mu_2\mu_3\gamma_2 K_1(\gamma_3 d)\{I_0(\gamma_2 d)K_1(\gamma_2 b) + I_1(\gamma_2 b)K_0(\gamma_2 d)\} \ . \tag{22}$$

Note that the following formula of Wronskian of modified Bessel functions was used in derivation of equations (17), (18), and (19) (Abramowitz and Stegun, 1965, p. 375).

$$W\{K_n(z), I_n(z)\} = I_n(z)K_{n+1}(z) + I_{n+1}(z)K_n(z) = \frac{1}{z} \ . \tag{23}$$

Hence we can summarize the magnetic fields in each medium. At first, in medium 1, that is in borehole,

$$\tilde{H}_{\rho,1}(\rho,k_z) = -ik_z aI(\omega)\cdot\begin{cases} I_1(\gamma_1\rho)K_1(\gamma_1 a) + C_1 I_1(\gamma_1\rho) \ , & \rho < a \\ I_1(\gamma_1 a)K_1(\gamma_1\rho) + C_1 I_1(\gamma_1\rho) \ , & \rho > a \end{cases} , \tag{24}$$

$$\tilde{H}_{z,1}(\rho,k_z) = aI(\omega)\gamma_1\cdot\begin{cases} I_0(\gamma_1\rho)K_1(\gamma_1 a) + C_1 I_0(\gamma_1\rho) \ , & \rho < a \\ -I_1(\gamma_1 a)K_1(\gamma_1\rho) + C_1 I_0(\gamma_1\rho) \ , & \rho > a \end{cases} , \tag{25}$$

with the aid of the formulae for derivatives of Bessel function (Abramowitz and Stegun, 1965, p. 376),

$$\frac{d}{d(\gamma\rho)} I_1(\gamma\rho) = I_0(\gamma\rho) - \frac{1}{\gamma\rho} I_1(\gamma\rho) \ , \tag{26}$$

$$\frac{d}{d(\gamma\rho)} K_1(\gamma\rho) = -K_0(\gamma\rho) - \frac{1}{\gamma\rho} K_1(\gamma\rho) \ . \tag{27}$$

Secondly, in medium 2, that is in casing,

$$\tilde{H}_{\rho,2}(\rho,k_z) = -ik_z aI(\omega)\{C_2 I_1(\gamma_2\rho) + D_2 K_1(\gamma_2\rho)\}$$
$$= -ik_z aI(\omega)\frac{\mu_1 I_1(\gamma_1 a)}{b|\underline{\underline{\mathbf{A}}}|}$$
$$\cdot\{\mu_2\gamma_3 K_0(\gamma_3 d)[I_1(\gamma_2\rho)K_1(\gamma_2 d) - I_1(\gamma_2 d)K_1(\gamma_2\rho)]$$
$$-\mu_3\gamma_2 K_1(\gamma_3 d)[I_0(\gamma_2 d)K_1(\gamma_2\rho) + I_1(\gamma_2\rho)K_0(\gamma_2 d)]\}\ , \tag{28}$$

$$\tilde{H}_{z,2}(\rho,k_z) = aI(\omega)\gamma_2\{C_2 I_0(\gamma_2\rho) - D_2 K_0(\gamma_2\rho)\}$$
$$= aI(\omega)\frac{\mu_1\gamma_2 I_1(\gamma_1 a)}{b|\underline{\underline{\mathbf{A}}}|}$$
$$\cdot\{\mu_2\gamma_3 K_0(\gamma_3 d)[I_0(\gamma_2\rho)K_1(\gamma_2 d) + I_1(\gamma_2 d)K_0(\gamma_2\rho)]$$
$$-\mu_3\gamma_2 K_1(\gamma_3 d)[I_0(\gamma_2\rho)K_0(\gamma_2 d) - I_0(\gamma_2 d)K_0(\gamma_2\rho)]\}\ . \tag{29}$$

In medium 3, that is in formation,

$$\tilde{H}_{\rho,3}(\rho,k_z) = -ik_z aI(\omega)D_3 K_1(\gamma_3\rho)$$
$$= ik_z aI(\omega)\frac{\mu_1\mu_2}{|\underline{\underline{\mathbf{A}}}|}\frac{I_1(\gamma_1 a)K_1(\gamma_3\rho)}{bd}\ , \tag{30}$$

$$\tilde{H}_{z,3}(\rho,k_z) = -aI(\omega)\gamma_3 D_3 K_0(\gamma_3\rho)$$
$$= aI(\omega)\frac{\mu_1\mu_2\gamma_3}{|\underline{\underline{\mathbf{A}}}|}\frac{I_1(\gamma_1 a)K_0(\gamma_3\rho)}{bd}\ . \tag{31}$$

Finally, the magnetic fields in space domain are to be obtained by taking inverse Fourier transform, or in turn, Fourier cosine or sine transform.

$$H_{\rho,j}(\rho,z) = \frac{1}{2\pi}\int_{-\infty}^{\infty}\tilde{H}_{\rho,j}(\rho,k_z)e^{+ik_z z}dk_z$$
$$= \frac{i}{\pi}\int_{0}^{\infty}\tilde{H}_{\rho,j}(\rho,k_z)\sin(k_z z)dk_z\ , \tag{32}$$

$$H_{z,j}(\rho,z) = \frac{1}{2\pi}\int_{-\infty}^{\infty}\tilde{H}_{z,j}(\rho,k_z)e^{+ik_z z}dk_z$$
$$= \frac{1}{\pi}\int_{0}^{\infty}\tilde{H}_{z,j}(\rho,k_z)\cos(k_z z)dk_z\ . \tag{33}$$

Note that there exists a closed-form solution for primary vertical magnetic field along the borehole axis even at the origin (Appendix), while the horizontal component vanishes along the z-axis.

$$H_z(0,z) = \frac{a^2(1+ik_1 R)I(\omega)}{2R^3}e^{-ik_1 R} + \frac{1}{2\pi}\int_{-\infty}^{\infty}\gamma_1 C_1 e^{+ik_z z}dk_z\ , \tag{34}$$

where

$$R = \sqrt{z^2 + a^2}\ . \tag{35}$$

References

Abramowitz, M., and Stegun, I. A., 1964, Handbook of mathematical functions : Dover Publ. Inc.

Augustin, A. M., Kennedy, W. D., Morrison, H. F., and Lee, K. H., 1989, A theoretical study of surface-to-borehole electromagnetic logging in cased holes : Geophysics, **54**, 90-99.

Erdelyi, A., Ed., 1954, Tables of integral transforms : McGraw-Hill Book Co.

Appendix. Primary fields due to a current ring in whole space

Determination of primary EM fields in whole space is to get the particular solution of equation (8) or

$$\left(\frac{\partial^2}{\partial\rho^2}+\frac{1}{\rho}\frac{\partial}{\partial\rho}-\frac{1}{\rho^2}+k_j^{\ 2}-k_z^{\ 2}\right)\tilde{E}_{\phi,j}(\rho,k_z)=\hat{z}_j\frac{a}{\rho}I(\omega)\delta(\rho-a)\ . \quad \text{(A.1)}$$

Let's start with the Hankel transform pair of order n.

$$F(\lambda)=H_n\{f(\rho)\}=\int_0^\infty f(\rho)\rho J_n(\lambda\rho)d\rho\ , \quad \text{(A.2)}$$

$$f(\rho)=H_n^{-1}\{F(\lambda)\}=\int_0^\infty F(\lambda)\lambda J_n(\lambda\rho)d\lambda\ . \quad \text{(A.3)}$$

Taking Hankel transform of order 1 of equation (A.1) yields

$$\left(\lambda^2+\gamma^2\right)\tilde{E}_\phi(\lambda,k_z)=-\hat{z}aI(\omega)J_1(\lambda a)\ . \quad \text{(A.4)}$$

Hence the electric field in k_z domain is

$$\tilde{E}_\phi(\rho,k_z)=-\hat{z}aI(\omega)\int_0^\infty\frac{J_1(\lambda a)}{\lambda^2+\gamma^2}J_1(\lambda\rho)\lambda d\lambda\ , \quad \text{(A.5)}$$

and using integral transform tables (Erdelyi, 1954, Ch. 8, Sec. 11, eq. (10)),

$$\tilde{E}_\phi(\rho,k_z)=-\hat{z}aI(\omega)\cdot\begin{cases}I_1(\gamma\rho)K_1(\gamma a) & , \quad \rho<a\ ,\\ I_1(\gamma a)K_1(\gamma\rho) & , \quad \rho>a\ .\end{cases} \quad \text{(A.6)}$$

According to equations (13) and (14), the primary magnetic fields in space domain are

$$H_\rho(\rho,z)=\frac{aI(\omega)}{\pi}\cdot\begin{cases}\int_0^\infty I_1(\gamma\rho)K_1(\gamma a)k_z\sin(k_z z)dk_z & , \quad \rho<a\ ,\\ \int_0^\infty I_1(\gamma a)K_1(\gamma\rho)k_z\sin(k_z z)dk_z & , \quad \rho>a\ ,\end{cases} \quad \text{(A.7)}$$

$$H_z(\rho,z)=\frac{aI(\omega)}{\pi}\cdot\begin{cases}\int_0^\infty \gamma I_0(\gamma\rho)K_1(\gamma a)\cos(k_z z)dk_z & , \quad \rho<a\ ,\\ \int_0^\infty -\gamma I_1(\gamma a)K_0(\gamma\rho)\cos(k_z z)dk_z & , \quad \rho>a\ .\end{cases} \quad \text{(A.8)}$$

Along the z-axis, that is for •• = 0, horizontal magnetic field vanishes while vertical magnetic field reduces to

$$H_z(0,z) = \frac{aI(\omega)}{\pi}\int_0^\infty \gamma K_1(\gamma a)\cos(k_z z)dk_z \ . \tag{A.9}$$

Again using integral transform tables (Erdelyi, 1954, Ch. 1, Sec. 13, eq. (45)) and mathematical handbook (Abramowitz and Stegun, 1965, p. 444) yields

$$\begin{aligned} H_z(0,z) &= \frac{a^2 I(\omega)}{\sqrt{2\pi}} \frac{(ik)^{3/2}}{\left(z^2+a^2\right)^{3/4}} K_{-\frac{3}{2}}\left(ik\sqrt{z^2+a^2}\right) \\ &= \frac{a^2 I(\omega)}{2} \frac{\left(1+ik\sqrt{z^2+a^2}\right)}{\left(z^2+a^2\right)^{3/2}} e^{-ik\sqrt{z^2+a^2}} \ . \end{aligned} \tag{A.10}$$

At the center of the current ring, we get

$$H_z(0,0) = \frac{I(\omega)}{2a}(1+ika)\,e^{-ika} \ . \tag{A.11}$$

Ernest Orlando Lawrence Berkeley National Laboratory
One Cyclotron Road | Berkeley, California 94720

Prepared for the U.S. Department of Energy under Contract No. DE-AC03-76SF00098