LBNL-42443
Preprint

# ERNEST ORLANDO LAWRENCE BERKELEY NATIONAL LABORATORY

# GRETA: Utilizing New Concepts in γ-Ray Detection

M.A. Deleplanque, I.Y. Lee, K. Vetter,
G.J. Schmid, F.S. Stephens, R.M. Clark,
R.M. Diamond, P. Fallon, and A.O. Macchiavelli

**Nuclear Science Division**

October 1998

Submitted to
*Nuclear Instruments and Methods in Physics Research, Section A*

REFERENCE COPY
Does Not
Circulate
Bldg. 50 Library - Ref.
Lawrence Berkeley National Laboratory
LBNL-42443
Copy 1

## DISCLAIMER

This document was prepared as an account of work sponsored by the United States Government. While this document is believed to contain correct information, neither the United States Government nor any agency thereof, nor the Regents of the University of California, nor any of their employees, makes any warranty, express or implied, or assumes any legal responsibility for the accuracy, completeness, or usefulness of any information, apparatus, product, or process disclosed, or represents that its use would not infringe privately owned rights. Reference herein to any specific commercial product, process, or service by its trade name, trademark, manufacturer, or otherwise, does not necessarily constitute or imply its endorsement, recommendation, or favoring by the United States Government or any agency thereof, or the Regents of the University of California. The views and opinions of authors expressed herein do not necessarily state or reflect those of the United States Government or any agency thereof or the Regents of the University of California.

LBNL-42443

# GRETA: Utilizing New Concepts in $\gamma$-Ray Detection

M.A. Deleplanque, I.Y. Lee, K. Vetter, G.J. Schmid,* F.S. Stephens, R.M. Clark, R.M. Diamond, P. Fallon, and A.O. Macchiavelli

Nuclear Science Division
Ernest Orlando Lawrence Berkeley National Laboratory
University of California
Berkeley, California 94720

October 1998

*Present address: Lawrence Livermore National Laboratory, Livermore, CA 94550

This work was supported by the Director, Office of Energy Research, Division of Nuclear Physics, Office of High Energy and Nuclear Physics, of the U.S. Department of Energy under Contract No. DE-AC03-76SF00098.

# GRETA: Utilizing New Concepts in γ-Ray Detection

M.A. Deleplanque, I.Y. Lee, K. Vetter, G.J. Schmid*, F.S. Stephens, R.M. Clark,

R.M. Diamond, P. Fallon and A.O. Macchiavelli

*Nuclear Science Division, Lawrence Berkeley National Laboratory,*

*Berkeley, CA 94720, USA*

## Abstract

We present a new concept for γ-ray detector arrays. An example, called GRETA (Gamma-Ray Energy Tracking Array), consists of highly segmented HPGe detectors covering 4π solid angle. The new feature is the ability to track the scattering sequence of incident γ rays and in every event, this potentially allows one to measure with high resolution the energy deposited, the location (incident angle) and the time of each γ ray that hits the array. GRETA will be of order of 1000 times more powerful than the best present arrays, such as Gammasphere or Euroball, and will provide access to new physics.

* Present address: Lawrence Livermore National Laboratory, Livermore CA 94550

# 1. Introduction

Much of what we know about nuclear energy levels has come from studying the electromagnetic radiation emitted when the system makes a transition from one state to another. For a nucleus, the order of magnitude of the transition energy is 1 MeV. For about 30 years, high-purity germanium (Ge) crystals have been the detectors of choice for such studies. Improvement in detector properties (size, energy resolution) and in detector number (large arrays) have recently culminated in the construction of Gammasphere [1], Eurogam [2] and Euroball [2,3]. These arrays all use the concept of Compton suppression to improve the peak-to-background ratio in the $\gamma$-ray spectra. In this paper, we present a new concept for a $\gamma$-ray detector array, illustrated in the detector system called GRETA (Gamma-Ray Energy Tracking Array), that will have a resolving power[1] 100 to 1000 times greater than Gammasphere. GRETA consists of a "solid" shell of about 100 highly segmented Ge detectors. The solid angle subtended by the Ge detectors will be $4\pi$ (instead of approximately $2\pi$ as in a Compton-suppressed array), and the Compton-scattered $\gamma$-rays will be recovered (instead of rejected) by tracking the $\gamma$-ray interactions from one detector to the next.

These $\gamma$-ray detector arrays are primarily used to study nuclear structure and reactions. However, they can also play an important role in other fields in which the nucleus is used as a laboratory; for example, in studying fundamental interactions or astrophysics; or in searches for exotic forms of matter such as strange matter. The unique characteristics of GRETA will enable us to address new kinds of physics.

The next section will review the development of $\gamma$-ray detectors, leading to the need for a new concept. Section 3 will present the GRETA concept. Section 4 will outline the

[1] As will be discussed later (paragraph 2.2.d), the resolving power of such arrays depends to some extent on the experiment considered.

methods used to design such a detector array and the present status of the research and development. Section 5 will briefly review the new physics that can be done with such an array.

## 2. Development of γ-ray detectors

We will first present the characteristics of a good γ-ray detector array and then review the development of the Ge detectors. Some of the new physics discoveries made using such arrays will be mentioned at the end of each section.

### 2.1. Characteristics of a γ-ray detector array

An ultimate goal of a γ-ray detector array is to resolve all possible γ-ray decay sequences. Usually, detectors, such as microscopes or telescopes, are characterized by their resolving power. In nuclear structure physics, there are many weakly populated sequences embedded in large and complex backgrounds and the ability of the instrument to resolve such sequences depends on the detailed nature of both the sequence and the background, so that there is no unique definition of the "resolving power" of the detector. However, the concept of resolving power has proved useful and will be discussed in more detail in paragraph 2.2.d when evaluating the performance of detector arrays. Even without an explicit definition, it is clear that the important properties of a γ-ray detector are: 1) high efficiency in detecting incident γ rays; 2) high energy resolution; 3) high ratio of full-energy events to total (full energy and partial energy) events (called the peak-to-total ratio or P/T ratio); 4) high granularity to localize individual γ rays; and 5) stable operation and long life. The basic element of such a detector system is (and has been for more than 30 years) a semiconductor detector made of germanium, and the main reason for this has been their high γ-ray energy resolution. Progress has been made in both the size of these detectors and their arrangement into efficient arrays.

## 2.2. Development of Ge detector systems

### 2.2.a The first Ge detectors

In 1962, the first Li-drifted Ge detectors were made [4]. The new feature was their excellent γ-ray energy resolution (6 keV at 1 MeV) -- about a factor of 10 better than that of their predecessor, the NaI scintillator. The first detectors had a small volume (~1 ml) and a very small full-energy efficiency, ~1% of that of the standard NaI scintillator (7.5 cm diameter x 7.5 cm long at 25 cm from the source). But soon thereafter, Ge detectors with efficiencies around 10% were used. By 1970, γ-γ coincidence measurements using two Ge detectors were routinely used to construct complicated nuclear level schemes. A major discovery in nuclear structure using these detectors was the so-called "backbending" in ground-state rotational bands of moderately deformed nuclei in 1971 [5]. Because of the high energy resolution of these Ge detectors, weak γ-ray transitions could be seen for the first time up to and above spin 14. Around that spin, irregularities (backbendings) in the rotational bands revealed Coriolis effects [6] aligning single-particle angular momentum along the rotation axis. This "alignment" concept led to the study of single-particle motion in a rotating potential and the development of the cranking models. Such models have formed the basis for understanding the properties of nuclei at high spins and have been used ever since in both theoretical and experimental developments in nuclear structure.

### 2.2.b High-purity Ge detectors

A milestone in the development of Ge detectors came in 1971 [7] with the development of High-Purity Ge detectors. This meant that there was no longer a need for Li drift and bigger detectors could be made, providing much greater efficiency, particularly important in coincidence experiments.

### 2.2.c Compton suppression and detector arrays

In 1980, a big step was made with the development of arrays of Compton-suppressed Ge detectors. One way to decrease the background of partial-energy $\gamma$-ray events is to veto these events whenever possible. The large majority of these occurs when a $\gamma$ ray Compton scatters in the Ge detector and the scattered $\gamma$ ray escapes the detector, leaving only a partial energy signal that is of no interest. It is then advantageous to suppress this event. This is done by surrounding each Ge detector with another efficient $\gamma$-ray detector which catches the escaped Compton-scattered $\gamma$ ray and vetoes the recording of the signal from the Ge detector. This is the Compton-suppression technique. Typically, it increases the peak-to-total ratio of a 1.3 MeV $\gamma$ ray from 20%, for a bare Ge detector (of size 7 cm diameter by 8 cm long), to 50%, for a Compton suppressed detector. This well-known technique was "revived" around 1980 in the construction in Copenhagen of the first "array" of five elements, each composed of a Ge detector which is Compton-suppressed by a large NaI scintillator [8]. At that time, a more efficient scintillator, Bismuth Germanate (BGO), was being developed. Due to its high density and Z, this material is about three times more efficient per unit length than NaI in interacting with gamma rays. The Berkeley Nuclear Structure group pioneered the BGO Compton suppressors and assembled the first large array of 21 Compton-suppressed Ge detectors called HERA [9]. Such arrays were developed in parallel in Europe, particularly in Daresbury, England where various configurations of arrays called TESSA were set up. It was with one of these arrays that "superdeformed nuclei at high spins" were discovered in 1986 [10]. Superdeformed nuclei are loosely referred to as nuclei which are more deformed than "usual", i.e. typically they have the shape of an axially symmetric ellipsoid with a ratio of the long to short axis around 2. They are interesting because the forces that the nucleons feel in such nuclei differ in systematic ways from those felt in "normal" nuclei. For example, the Coriolis and centrifugal forces due to rotation are weaker relative to the coupling to deformation than in normal nuclei and this gives us a chance to study nuclei under new conditions. An important resulting

property of superdeformed nuclei is that they are the best (nuclear) rotors known, giving deexcitation spectra of equally spaced gamma rays which are relatively easy to search for in two- or three-dimensional $\gamma$-ray spectra. Except for the heaviest (the fission isomers), the superdeformed nuclei are populated in nuclear reactions only at very high spins (40 to 60 $\hbar$), and the reaction mechanism is such that their population is very small, typically only about 1% of the total reaction cross section. The key to finding and studying these nuclei was to make use of the regular spectra and of the increased efficiency of multidetector arrays, which provide higher-order coincidence spectra and thus higher resolving power.

2.2.d Resolving power and 4 $\pi$ arrays

To quantify the performance of $4\pi$ arrays and plan new ones, the concept of resolving power -- the ability to isolate a given sequence of gamma rays from a complex spectrum -- was introduced [1]. Our precise definition of the resolving power [11] is dependent on assumptions related to the type of spectra. (Other formulations have been given by D. Radford [12]).

We consider the $\gamma$-ray spectra typically produced in nuclear fusion reactions, which consist of a number of $\gamma$ rays per cascade extending over a certain energy range. This determines an average energy spacing per transition (SE). We further assume that the background is essentially unrelated to the peaks (which means that the cascade of interest has a small intensity and is not in coincidence with the bulk of the background). To be "resolved", a peak must stand out above the background and also be statistically significant. We take as criteria for a peak to be "resolved" from the background that the peak-to-background ratio is one and that there must be N counts in the peak.

The peaks are measured with an energy resolution $\delta E$, so that every time we set a gate on such a peak (i.e., a coincidence gate of width $\delta E$), we improve the peak-to-background ratio for that sequence by a factor around $SE/\delta E$. We also take into account

that a $\gamma$-ray peak represents only a fraction P/T of the $\gamma$-ray total intensity (see paragraph 2.1), and further that a typical gate includes only a fraction of the full-energy peak (a realistic number for a FWHM gate on a Gaussian peak is 76%). The improvement in peak-to-background is then given by $R = 0.76(SE/\delta E)P/T$. In this derivation of the resolving power, we assume that for any fold considered, the peaks to resolve are much smaller than the background. Thus, the peak-to-background ratio in the one-fold spectrum for a branch of intensity $\alpha$ is $\alpha R$, and for an f-fold coincidence spectrum (i.e. one where f $\gamma$ rays are detected) this ratio is $\alpha R^f$. Thus, for a peak-to-background ratio of one, $\alpha R^f=1$. The number of counts n in the peaks of an f-fold coincidence spectrum for a branch of intensity $\alpha$ is $n=\alpha N_0 \varepsilon^f$, where $N_0$ is the total number of events, and $\varepsilon$ is the total full-energy peak efficiency of the array for a typical energy.

We now apply the criteria given above to define the resolving power. The conditions for a cascade of minimum intensity ($\alpha_0$) to be "resolved" (N counts in a peak with peak-to-background ratio one) define an "optimum-fold" (F) that will just satisfy the criteria given above. Thus we have: $N=\alpha_0 N_0 \varepsilon^F$ and $\alpha_0 R^F=1$. The intensity of that cascade $\alpha_0 = 1/R^F$ defines the resolving power RP as $1/\alpha_0=R^F$. At this optimum fold, F, $\alpha_0$ represents the smallest sequence intensity that can be "resolved" in that spectrum. By eliminating F using the equations for $\alpha_0$ and N, one obtains the expression for the resolving power as a function of $\varepsilon$ and R:

$$RP = \exp [ \ln(N_0/N) / ( 1 - \ln\varepsilon / \ln R )]. \qquad (1)$$

This formula shows that the important parameters which determine the performance of this type of $\gamma$-ray array are the energy resolution, $\delta E$, of the detectors, their characteristic peak-to-total ratio, P/T, and the full-energy peak efficiency, $\varepsilon$. What the first generation arrays such as HERA have done over previous systems of three or four Ge detectors is to improve (1) the P/T through Compton suppression and (2) the full-energy peak efficiency

through the number of detectors used. If we take N = 100 and a typical value of $N_0 = 2.88 \times 10^{10}$, corresponding to a reaction rate of $10^5$/sec for a duration of 80 hours, then $\ln(N_0/N) = 19.5$. We can evaluate the resolving power of the HERA array mentioned in the previous paragraph. In the evaluation one takes into account realistic experimental conditions and defines $\delta E_{eff}$ as an "effective" energy resolution, which includes not only the intrinsic resolution of Ge detectors (approximately 2 keV for a 1 MeV gamma ray), but also other effects that might affect the peak width, such as the Doppler broadening due to the recoil velocity of the product nuclei that emit the $\gamma$ rays and the finite size of the Ge detector. For HERA, $\varepsilon = 0.012$, $\delta E_{eff} = 6.1$ keV, P/T = 0.40. We take SE = 60 keV for all our evaluations. The resolving power of HERA is then 50 for $\gamma$ rays of approximately 1 MeV.

In 1987, another big step was accomplished when the Berkeley Nuclear Structure group proposed an array design that was optimized to maximize the solid angle covered by the Ge detectors, and that took advantage of the fact that bigger Ge detectors could then be manufactured (efficiency of 75% of that of the standard NaI detector (c.f. paragraph 2.2.a) as compared to 25% for the HERA Ge detectors), which improved the P/T as well as the efficiency. Each Ge detector was still surrounded by a BGO Compton suppressor, and altogether, almost the entire $4\pi$ solid angle was covered by 110 Ge detectors and their BGO Compton suppressors. The array is called Gammasphere and it was built at the Lawrence Berkeley National Laboratory with the participation of other US National Laboratories and Universities. Dedicated in December 1995, Gammasphere is a National Facility and was operated at LBNL until September 1997. It was then moved for some period of time to the Argonne National Laboratory. Detector arrays of similar resolving power were constructed in parallel in Europe (Eurogam, succeeded now by the Euroball array).

The Gammasphere detailed design will not be discussed here, but there is one property that should be mentioned because it affects the resolving power: approximately

70 of a total of 110 Ge detectors are segmented into two D-shaped halves through the electrical segmentation of the outer electrode. This feature, which will be discussed in a following paragraph, increases the effective energy resolution of the Ge detectors ($\delta E_{eff}$ decreases) by reducing the Doppler broadening due to the finite size of the angle subtended by each detector. For Gammasphere, $\delta E_{eff}$=3.95 keV, P/T=0.46, which gives R=5.3 and $\varepsilon$=0.09, so that the resolving power is now approximately 3000, about 60 times that of HERA. An example of the increased power of these new arrays is the discovery of the "linking transitions" between superdeformed states and normally deformed states in some nuclei around mass 190 [13]. These transitions are indeed very weak, around 1% of the intensity of the superdeformed bands (which themselves have an intensity around 1% of the total cross section) and their observation corresponds to the gain made possible by the increase in resolving power. Observing these "superdeformed decay" transitions helps understand how the nucleus makes such a dramatic transition between two states where its shape is very different. These links have been observed in very few cases (5-10 out of about 300 bands known) and the full decay mechanism is still not clear. Many failed searches in other nuclei indicate that higher resolving power is needed to elucidate completely the decay mechanism of superdeformed bands.

2.2.e Clustering of Ge detectors -- towards $4\pi$ Ge shell

In parallel with Gammasphere design and construction, new types of Ge detectors were developed as a means of maximizing the efficiency and P/T of big arrays. The two most important ones are the clover detector [14] and the cluster detectors [15] which are both components of the Euroball array mentioned earlier. In present arrays, each of these is surrounded by a Compton suppressor. The clover detector is a composite of four coaxial Ge detector elements whose side surfaces have been cut so that they fit together much like the leaves of a clover (see Fig. 1). The main advantage of such detectors is their large efficiency (140%) while the localization remains similar to that of a single

detector since one can usually determine which of the four elements is first hit by an incoming gamma ray. Thus the Doppler broadening is reduced to that of one of the elements. Such composite detectors utilize a new concept that considerably increases the efficiency of an array: the concept of "adding back". By adding the energy of signals that scatter between crystals, the efficiency of a clover detector is increased by a factor 1.5 over the sum of the contributions from the individual crystals. The cluster detector is an assembly of seven Ge detectors closely packed in a single cryostat (see Fig. 2). The novelty of this cluster is that each element of this assembly of seven is an encapsulated Ge detector [15]. An encapsulated detector is hermetically encased (in vacuum) in an aluminum can which is very close (1mm) to the Ge crystal and provides electrical shielding. The seven detectors are packed very close together (crystal-to-crystal distance of 2.7 mm) in a cryostat with a ~5 mm spacing to the outer can which provides heat shielding. In this way the space between each detector in the group is minimized while retaining flexibility to retrieve individual detectors for repair. Clover and cluster detectors can increase the resolving power of an array, compared with arrays containing only conventional detectors, due to higher efficiency and P/T. However, they suffer to some extent the same limitations as Gammasphere-type detectors: (1) part of the useful solid angle is lost for Compton suppression and (2) the gain in efficiency and P/T is partly offset by summing effects where two $\gamma$ rays interacting in the same detector are counted as one, due to the large solid angle of such detectors. The summing effects can be remedied by using many such composite detectors far enough away from the gamma-ray source, but the cost of such arrays would be prohibitive. This is where the new concept of GRETA comes in and qualitatively changes what can be achieved in $\gamma$-ray detection.

## 3. GRETA concept

### 3.1. GRETA principle

GRETA consists of a "solid" shell of (about 100) highly segmented large (e.g., 8 cm diameter by 9 cm long) HPGe detectors. The outer contact (surface of the coaxial detector) is segmented into many "rectangular-like" areas. The full energy and angle with respect to the beam direction of each incident $\gamma$ ray are determined by measuring, with high resolution, the energy and position of each of its interactions in the Ge crystals (see Fig. 3). The incident gamma ray is reconstructed by identifying these interactions using a tracking algorithm based on the Compton-scattering formula which describes the interactions. The $\gamma$-ray energy is obtained by adding the energy deposited at each interaction, and the emission angle of the incident $\gamma$ ray is deduced from the position of the first interaction. Using fast transient digitizers, an additional gain in efficiency comes from the reduced dead time. In addition, it is expected that, using parallel processing, this analysis can be done in real time. The improvement over previous arrays comes from three areas: (1) the efficiency is increased because nearly 100% of the solid angle is occupied by the Ge detectors which provide a useful high-resolution energy signal (instead of 46% in Gammasphere, for example) and, in addition, most gamma rays Compton-scattered to another crystal can be recovered; (2) because of the high segmentation, each $\gamma$-ray interaction can now, in principle, be resolved and attributed (by tracking) to a particular incident gamma ray, thus eliminating the summing problem and improving the peak-to-total ratio; and (3) since the interaction-position resolution is high (of order 2 mm), the position of the first interaction of a $\gamma$ ray will give its direction from a target or source with that precision and the Doppler broadening effects due to finite detector size will be greatly reduced.

### 3.2. Determination of the $\gamma$-ray-interaction position

#### 3.2.a The radial position

It is known [16] that an average radial position of interactions from one $\gamma$ ray in a coaxial detector can be determined by the drift time of the charge toward the electrodes.

However, this property has not been used in typical nuclear physics experiments although a hardware circuit to determine the drift time of the main signal has been implemented in Gammasphere [17]. In GRETA, the radial position of an interaction is related to the drift time in the segment that receives the net charge from the interaction as well as to the shape of the transient signals (see paragraph 3.2.c). It will be deduced from the full decomposition of all the signals in the detector.

3.2.b Azimuthal and depth position

In the Gammasphere two-fold segmented detector (paragraph 2.2.d, Fig. 4), the incident $\gamma$ ray may be completely absorbed in one half of the crystal, and it is then observed as a net charge signal in the corresponding electrode. If the $\gamma$ ray scatters into the other half of the crystal, there is a net charge in each electrode and in that case, its localization is based on the proportion of the energy deposited in each half. This gives a position resolution that is less than the size of the segment and is about a third of the solid angle subtended by the detector. Based on simulations and measurements, an often used procedure of position determination is that if more than 90% of the total $\gamma$-ray energy is deposited in one segment, the incident $\gamma$ ray is assumed to hit the center (of the front surface) of that segment, and if the energy deposited in one segment is between 10% and 90% of the total $\gamma$-ray energy, the incident $\gamma$ ray is assumed to hit the center (of the front face) of the detector. Of course, when there is a net charge in both halves, one cannot distinguish between a scattering of one $\gamma$ ray from one side to the other and a double hit, but the latter are small (typically $< 10\%$ in Gammasphere). In GRETA, one would like to segment the outer electrode of the Ge detector such that only one $\gamma$-ray interaction occurs in each segment. A crude evaluation using the interaction length of $\gamma$ rays (of a typical energy of 1 MeV) indicates this requires "rectangular-like" segments 2-3 cm on a side etched onto the outer surface of the detector (i.e., in the length (z) direction, and in the azimuthal ($r\phi$) direction). By just collecting the net charge signals on each segment that

fires, the azimuthal- and z-position resolution would correspond to roughly the size of the segment. However, one can do better than this by making use of the transient signals induced in neighboring electrodes.

### 3.2.c The transient signal

In the two-fold segmented detectors of Gammasphere, one could analyze the energy distribution of the net charges in adjacent segments to obtain a position resolution better than the size of the segments, but one can do much better by analyzing the transient "induced charges" in neighboring segments. It was realized [18] that the charge drifting toward one electrode induces a signal in the neighboring electrodes and that the characteristics of this transient signal depend on the position of the interaction relative to the boundaries of the electrodes. Figure 5 shows schematically the current signals produced when the charge from an interaction drifts toward its destination electrode as indicated in the Ge cross-section diagram on the left. The solid line shows the current signal in the segment where the interaction takes place. The signal increases continuously until the charge is neutralized when it reaches the electrode. The dashed lines are the transient currents as a function of time in the two neighboring segments. Their general behavior can be understood simply by considering the field lines that intersect each electrode and generate the image charges. Thus, in the segment where the interaction took place, the image charge always increases until the charge reaches the electrode, while in the neighboring segments, the transient image charge will decrease (and therefore the current will change sign) when the charge gets close enough to the destination electrode, and they will decrease more or less rapidly depending on the initial position of the charge. The net charge will be zero in these neighboring segments. Both the amplitude and the time of the maximum of the transient current signals can be used as parameters that define the position of the interaction with greater precision than the size of the segments. Using a prototype 12-segment Ge detector, tests are presently being

performed to determine the attainable position resolution (see paragraph 4.2). A position resolution of a few mm in three dimensions is expected.

### 3.3 Reconstruction of the incident $\gamma$ rays and of their energy

Once the position and energy of each $\gamma$-ray interaction in the Ge detectors have been determined (with a known resolution) the next step is to deduce which interactions belong to a given $\gamma$ ray, sum up their energies to obtain the incident $\gamma$-ray energy and find the first interaction to obtain the $\gamma$-ray direction. So far, an algorithm involving a three-step process has been implemented [19], which constitutes a preliminary evaluation of this aspect of GRETA. The first step is to group the interactions into "initial clusters", which are assumed to result from the interactions of one incident $\gamma$ ray in the Ge detector array (at present considered to be a solid Ge shell). In a second step, the interactions within each cluster are evaluated (tracked) using the Compton formula to determine whether it is a "good" cluster. If not, one tries to maximize the number of good clusters in a third step by rearranging (adding or splitting) the original clusters and then testing the rearranged clusters once more with the Compton formula. This algorithm has been tested using simulated data from GEANT [20] which provides a set of interaction points generated by a number of input $\gamma$ rays. The following subsections give a more detailed description of this reconstruction process.

#### 3.3.a Cluster creation

We define clusters by the angle $\vartheta$ from the center of the array subtended by a pair of interactions. In this step we ignore the depth (z) of the interaction points. If the angle defined by any two interaction points is smaller than $\vartheta$, these interactions are defined as initially belonging to the same cluster. The cluster is expanded if any additional points are found to be within the angle $\vartheta$ from any cluster point. The set of clusters defined in this way is then tested using the Compton formula.

3.3.b Tracking

Tracking has been extensively used before in particle detection. It generally uses a trajectory or time sequence of the particle position. This is not possible with $\gamma$ rays where all the signals from a series of $\gamma$ rays from one event appear simultaneous. In our case, tracking uses the energy deposited and the 3-dimensional position of each interaction point. The energy deposited ($E_d$) is the energy difference between the incident $\gamma$ ray and the scattered $\gamma$ ray. It is related to the scattering angle $\theta$ by:

$$E_d = E_\gamma - E'_\gamma$$

$$= E_\gamma - \frac{0.511}{\frac{0.511}{E_\gamma} + 1 - \cos\theta} \qquad (2)$$

where $E_\gamma$ is the sum of the energies of the interaction points in the cluster. From the measured value of $E_d$, the scattering angle can be determined. However, the scattering angle can also be obtained from the position of the consecutive interaction points. The consistency of these two values is a test of the scattering sequence assumed. This is a very complicated problem since in a typical event, there are of order 20 $\gamma$ rays, each having on the average 4 interactions in the Ge shell. Such tracking techniques have not been used before, except perhaps in astronomy in so-called Compton $\gamma$-ray observatories to determine the direction of a $\gamma$-ray source in the sky. However, tracking is much simpler in this case because the source emits a single $\gamma$ ray at a time and only the first Compton interaction is used.

To evaluate a sequence in GRETA we use a figure of merit, which is basically the total $\chi^2$ resulting from the difference of the two scattering angle values for all interaction points in the cluster. For a cluster of n interaction points, there are n! possible scattering sequences. These sequences are tested to find the one with the minimum $\chi^2$. If it is below a predetermined threshold for $\chi^2$, the cluster is defined to represent a "good" $\gamma$ ray.

If it is above, the clusters are split or added in some prescribed way and then tested again in the same way using the Compton formula. This process produces a set of reconstructed $\gamma$ rays which is compared to the known set of input $\gamma$ rays to give the peak-to-total ratio and an efficiency curve as a function of $\vartheta$. Such a study of the dependence of the performance on the angle parameter $\vartheta$ (see paragraph 4.3) will determine which value(s) of $\vartheta$ to use in the analysis of experimental data.

The above cluster recognition algorithm is one possible approach and shows the "principle" of reconstruction of the incident $\gamma$ rays. Other algorithms need to be explored, as well as different techniques such as neural networks.

### 3.4. Preliminary description of GRETA

The goal of this section is to give the reader a realistic idea of what such an array would look like. Since the design studies are not finished, we will only describe a possible detector configuration, as well as general components of the electronics and acquisition systems.

#### 3.4.a Detectors

A geometry that keeps the spherical symmetry and in which the Ge material covers the $4\pi$ solid angle is similar to that of Gammasphere [1]. It consists of 120 elements, 110 (almost) regular hexagons and 12 pentagons, two of which are used for the entrance and exit beam pipes in nuclear physics experiments at accelerators. Taking into account the present production limitations on the diameter of the Ge detectors (approximately 8 cm), tapered hexagonal detectors with the back part cylindrical, as shown in Fig. 6, optimize the amount of Ge material used without losing too much efficiency: only the last 1.4 cm at the back of the detector will not cover the full space. Using the Gammasphere geometry, this gives an inner radius (to the front face of the crystal) of approximately 12 cm, enough space to accommodate auxiliary detectors. A

segmentation into 36 elements corresponds roughly to one interaction length and thus there are approximately 4000 segments in GRETA. Other packing geometries are being considered, for example, using cubic or regular hexagonal shape detectors that will make better use of the Ge material but will no longer have spherical symmetry.

### 3.4.b Electronics

The present view is that cold FET's in the same vacuum as the crystal will give the best energy resolution. There is some uncertainty as to whether 36 (or more depending on the packaging chosen) FETs in one cryostat will be reliable enough to be usable. However, the present experience with our 12-segment prototype is encouraging; in a six-month period of continuous operation, and several temperature cyclings, there was no problem associated with the cooled FETs in the detector vacuum container. The preamplifier signal, after digitization, will be filtered in various ways according to the information wanted; primarily low bandwidth for energy information and high bandwidth for shape analysis. Therefore, the preamplifier is designed to have a large enough bandwidth [21] with a minimum risetime of approximately 10 ns. This should be enough to determine the interaction position of the net and transient signals as shown in Fig. 7. In this figure, calculated charge signals are shown for the segment in which an interaction takes place (segment 1) and in the $\phi$ neigbors (segments 2,3,4, see inset on top left panel of Fig. 7), as a function of the interaction position for a cylindrical six-fold segmented Ge detector of radius 35 mm. In this two-dimensional simulation, the interaction position is characterized by the Y coordinate (distance perpendicular to one boundary in segment 1 and the radius R. Y and R are each varied at intervals of 3 mm. The detailed shape of the induced signals (whether positive or negative, and the duration of the signal) will be discussed later (paragraph 4.1). Note that the amplitude of the induced signal depends primarily on how far from the interaction the segment boundary is, and that the risetime of the induced signal depends on the radial position. More details will be given in ref. [22].

The 10 ns risetime capability of the preamplifier is enough to distinguish the various calculated signals.

3.4.c Pulse shape analysis and data acquisition

The general data flow is schematically shown on Fig. 8. The goal of on-line data analysis is to deduce and subsequently store only the direction (first interaction point), energy and time of emission of each $\gamma$ ray. The second interaction position will also be stored when polarization analysis is desired. We estimate that, using current algorithms, the computation time for full tracking takes approximately 1 ms, therefore if we use 1000 parallel computers, we will be able to analyze $10^6$ events per second. At a cost of $1000 per computer, this is an achievable goal. In addition, we estimate that optimizating both hardware and software may reduce the tracking analysis time by a factor 10. The pulse shape analysis electronics represents a compromise between the needs of sufficient energy resolution and high count rate. A 12-bit, 10-ns ADC will provide a continuous train of $10^8$ words or $2x10^8$ bytes per second. Thus each segment has its own ADC which digitizes the preamplifier signal in 300 ns, and also provides digitized background information. However, this 12 bit, 10 ns ADC is currently expensive and it is presently advantageous to replace it with a cheaper combination of two ADCs, a slower one (25 ns) with high resolution (12 bits) for energy measurement, and a fast one (10 ns) with lower resolution (8 bits) for signal shape measurement. Two levels of digital signal processors (DSP) could be used to determine the position, energy and time of each gamma-ray interaction. In the first level, each ADC is connected to its own DSP which calculates the energy, time and other important characteristics (e.g., shape) of the digitized signal, using a variety of filters and algorithms. The goal is to accomplish this in approximately 1 microsecond. In addition, the signal from the central detector contact can be used with a slower shaping time to improve the energy resolution when only one $\gamma$ ray is absorbed in that detector. At this point, it is conceivable to make a first level decision to keep an

event depending on the number of interactions detected (i.e. $\gamma$-ray multiplicity), given an expected average number of four interactions per $\gamma$ ray. In the second level, we want to correlate the various first-level DSP signals in order to relate the transient signals to the appropriate interaction points and obtain the interaction position with a desired precision of order 2 mm. This is done in another set of (4000) DSP's in which we input the signals from each segment and a number of its neighbors, since we expect the transient signals to be strongest in the immediate neighbors. The number of neighbors needed and the details of the algorithm required to deduce the interaction position with the best resolution will be determined shortly using the 36 segments prototype. Again the goal is to process this second level in approximately 1 microsecond. At this point, typically 5 words (2 bytes each) per interaction (the 3 position coordinates, energy and time of each $\gamma$-ray interaction) are sent, with appropriate buffering, to the set of parallel computers. Assuming, as an example, that there are 25 $\gamma$ rays emitted in the event, each making an average of 4 interactions in the Ge material, the data flow consists of approximately 25 x 4 x 5 x 2 = 1 kbyte/event. Each event is processed through a "cluster recognition" algorithm to provide the direction, energy and time of each gamma ray in a time which is currently ~1 ms. With a reasonable selection of events (e.g. high multiplicity) and enough computers (~1000), events can be processed asynchronously and be stored on tape in this form as fast as they are produced in the experiment.

This represents only the principle of a data acquisition system, the DSP algorithms need to be developed, and the computer configuration is still to be designed. A module for digital signal processing suitable for GRETA detectors is presently being designed by X-ray Instrumentation Associates [23].

### 3.5. Evaluation

#### 3.5.a Resolving power

Since the research and development, as well as the design of GRETA, are not complete, a final number for the resolving power cannot be obtained at present. However, we expect a value between a minimum which corresponds to what we estimate can be achieved at present and a maximum which represents a "perfect" performance. Both limits of the resolving power are estimated by assuming the geometry described in section 3.4.a. and take into account the losses due to gaps and absorption in the Al cans. Also in both cases, it is assumed that the position resolution will be good enough to eliminate the Doppler broadening so that only the intrinsic Ge energy resolution remains, i.e., 2 keV at 1.332 MeV. This assumption is valid in the typical fusion reactions that were considered when evaluating previous arrays and it is used here for comparison purposes. In addition, because of the shorter processing time and the increased number of segments, the event rate can be increased by a factor of approximately 24: i.e., we estimate that with current DSP technology, each sector will be able to sustain 4 times the rate of that of a Gammasphere detector, which, with the 6-fold segmentation of the front face of each detector, results in an overall average factor of 24 improvement in the counting rate (the multiple transverse layers of the detector roughly compensate the 3 or 4 interaction points of each $\gamma$ ray in the detector). Here also, the factor 24 represents a maximum of what the array can accomplish since other limits (in beam intensities or in heat that a target can withstand) may decrease this value. Thus, $N_0$ in formula (1) is increased by a factor 24 (i.e., $2.4 \times 10^6$ events/sec). For the minimum value of the resolving power, the algorithm used to estimate the efficiency $\varepsilon$ and the peak-to-total P/T (see [19] and paragraph 4.3) assumes an isotropic launch of 25 gamma rays of 1.332 MeV and an interaction position resolution of 2 mm. The photopeak efficiency is found to be 22% and the P/T is 0.62, which gives a resolving power of $1.8 \times 10^6$, a gain factor of 600 compared with Gammasphere. For the maximum value of the resolving power, it is assumed that the photopeak efficiency is only limited by the transparency of the Ge material, the gaps between crystals, and by the absorption in the Al cans. This gives a

value ε of 54%. Assuming minimal uncertainties in the interaction position resolution, the P/T is estimated at 0.9, and the resolving power is then $1.4 \times 10^8$. Even the minimum, $1.8 \times 10^6$, is an enormous gain over the present arrays, and Fig. 9 shows that it is a 10 times bigger step than the previous one (e.g. between HERA and Gammasphere). In this figure, the resolving power is plotted against the photopeak efficiency for various values of R, the gain per fold of peak-to-background ratio.

The gain in **energy resolution** over Gammasphere is a factor 2 (for a typical fusion reaction considered in this evaluation)-- for γ rays of approximately 1 MeV -- similar to the gain between previous generations -- although the reason is different. The gain in energy resolution between HERA and Gammasphere is due to the larger distance between the target and the detectors in the latter as well as the segmentation of 70 of the Gammasphere Ge detectors resulting in a smaller angle subtended by the Ge detectors and therefore a smaller Doppler broadening. In GRETA, the angle subtended by each detector becomes irrelevant since the angle of the incident gamma ray is determined from tracking to within approximately 2 mm. The Doppler broadening is practically eliminated and only the intrinsic Ge resolution remains. The **efficiency** is immediately improved by a factor close to two over Gammasphere due to the gain in solid angle, and by an additional factor due to the add-back and tracking across detectors. The gain in **peak-to-total ratio** in GRETA over Gammasphere is due to the tracking which recognizes and keeps only the full-energy gamma rays. And finally, the **count rate** capabilities of GRETA are higher than those of Gammasphere by more than an order of magnitude.

3.5.b Efficiency vs resolution

Fig. 9 shows that at high efficiencies, the resolving power increases faster with efficiency than at low values. We can quantify the relative importance of gain per fold, R (proportional to energy resolution), and efficiency, ε, using formula (1), by calculating the

percentage change in resolving power, RP, per percentage change of R and $\varepsilon$. We find that the ratio of changes in ln RP relative to $\varepsilon$ and R, called $\Delta\varepsilon/\Delta R$, is:

$$\frac{\Delta\varepsilon}{\Delta R} = \frac{\delta(\ln RP) / \delta(\ln \varepsilon)}{\delta(\ln RP) / \delta(\ln R)} = \frac{\ln R}{\ln(1/\varepsilon)} \qquad (3)$$

Thus, if $\varepsilon$ is close to 1, $\Delta\varepsilon/\Delta R$ tends toward infinity, which means that for GRETA the efficiency is more important than R (i.e. the energy resolution or P/T ratio). In contrast, for the HERA array where the efficiency is small ($\varepsilon \sim 0.012$), $\Delta\varepsilon/\Delta R$ is approximately 0.3, which means the resolving power is more sensitive to R than to the efficiency. For Gammasphere this ratio is close to one and the efficiency and energy resolution have equal importance. This should be taken into consideration when designing GRETA.

## 4. GRETA development

The concept used in GRETA is new in two main aspects: using the signal shape to determine the interaction position accurately (~ 2 mm), and using a tracking algorithm to select full-energy $\gamma$ rays and determine the first interaction point. In addition, there are technical challenges: e.g., building highly segmented HPGe (n-type) detectors, designing fast electronics to analyze the pulse shape on-line, and developing a powerful analysis system to "track" on line. These problems have never been studied before in this context and therefore simulations are required to prove that such a detector array can be constructed and will function as expected. The general method is to calculate the signals in existing detectors and ensure that they reproduce the measured ones. Calculated signals are then used to determine the pulse parameters that are most sensitive to the interaction position in the crystal. Simulations, as well as measurements, will use these parameters to deduce the position resolution that can be achieved and to design the optimum detector. A tracking algorithm is developed to reconstruct the $\gamma$ rays once the positions of all the interactions in an event are determined. Details of this research and

development will be given in two other papers [19,22]. We shall give here only the milestones achieved.

### 4.1. Prototypes

Prototypes are used both for signal measurements and to develop the technology of segmented Ge detectors. The first tests were made using an existing Gammasphere segmented detector. Both the net charge signal and the transient charge signal were calculated and measured. The important conclusion drawn from these tests was that the transient signal does exist and its amplitude is comparable (as much as ~ 40% of the net charge signal amplitude) to the net signal in the sector hit and agrees well with that calculated. This is the basic information needed to be able to achieve a good position resolution for tracking gamma rays. However, the transient charge signal in the Gammasphere 2-segmented detector, extracted from the outer electrodes, is noisy because of the large capacitance between these electrodes and the Al can. Similar measurements have been made with the 12-segment prototype. In this detector, the noise is much smaller mostly because of the smaller capacitance due to the smaller area of each segment. The energy resolution of each segment is approximately 1.8 keV at 1.332 MeV, exceeding the specifications. Fig. 10 (left panels) shows the measured net charge signals for the interactions A) (top) and B) (bottom) which take place in segment 1 as indicated on the Ge detector schematic at the top of the figure. The incident $\gamma$ rays of 662 keV (from a $^{137}$Cs source) are collimated from the front in locations A) and B) and the multiple interactions can take place at any depth in the detector (in location B the $\gamma$ rays hit the tapered surface of the detector). The central and right panels compare the measured and calculated transient charge signals in segment 6 of the 12-segment prototype for the same locations A) (top) and B) (bottom). The shape of the signals can be understood from the time evolution of the image charges as the electrons and holes move towards the inside and outside electrode respectively. For example, in Fig. 10, A),

the electrons, which induce a positive charge on the outer electrode, are close to the center (positive voltage) electrode. Therefore they will contribute very little to the transient signal. The main contribution will come from the holes which induce a negative charge. This is why the transient charge signal is negative in Fig. 10, A). Conversely, in position B) (bottom panels), the electrons are the main contributors to the signal and the transient charge signal will be positive. In the calculation, the measured response from the preamplifier is included. The calculations still need to be refined [22] but the present agreement between the measurements and calculations is encouraging. When the incident $\gamma$ ray is close to the boundary between two segments, the amplitude of the transient signal is approximately 40% of that of the net charge signal. The amplitude of the transient signal changes (on average) 2% per mm change in the $\gamma$-ray interaction position, for the first cm from the boundary, very close to what is expected from calculations. Measuring such a change in transient signal amplitude appears feasible with existing detectors. The next step is to order a 36-segment prototype, which will test both its feasibility and the expectation that 36 segments are optimum for position resolution.

### 4.2. Signal processing simulations

As mentioned before, to be able to track $\gamma$ rays, one must deduce (within 1-2 mm) the position of each interaction of each $\gamma$ ray in the crystal from the measured signals in all the segments. This is not a simple problem since each interaction typically induces signals in several neighboring segments and there will typically be several interactions per $\gamma$ ray in the same segment and/or in nearby segments. Therefore, the signals from several interactions may add and will require proper separation into the original interactions. There is also the possibility of nearby $\gamma$-ray hits in high-multiplicity events. This question is presently under investigation for a two-dimensional cross section (see Fig. 7) of a crystal. The general method is to generate from simulations a "basis" of signal shapes in each segment due to interactions occurring in a regular grid spanning the

cross sectional area. One then uses this basis to decompose the observed (or calculated) signals from an event to deduce the position of one (or several) interactions. Fig. 7 shows [22] an example of a set of basis functions calculated in several segments for a regular set of interactions separated by $\Delta R = \Delta Y = 3$ mm. One sees that certain characteristics of the signals (e.g., maximum amplitude, and time of maximum amplitude) clearly depend on the interaction position. Methods of decomposition, as well as other approaches such as neural networks need to be investigated.

4.3. Tracking

A tracking algorithm has been developed [19], which reconstructs $\gamma$-ray energies and positions from a set of known interactions simulated with the GEANT Monte Carlo program. These interactions are defined by their energy and their position, assumed to be known with a certain accuracy. As already mentioned (see paragraph 3.3) one uses geometric proximity (angle parameter, see paragraph 3.3.a) to "define" clusters which are candidate gamma rays and then uses the Compton formula to identify those clusters which indeed represent a $\gamma$ ray. The results of the algorithm are compared with the known input and its success is measured by the efficiency and peak-to-total ratio. We consider, as an example, the case of the detector configuration described in paragraph 3.4.a, with realistic gaps and absorption in the cans. Dependence of the performance on $\gamma$-ray energy, multiplicity, and position resolution have been studied, but we shall only discuss one example. Fig. 11 shows efficiency and peak-to-total ratio as functions of the angle parameters for a high-multiplicity case of 25 $\gamma$ rays of energy 1.332 MeV. This represents a difficult case, with $\gamma$-ray energies that produce on the average four interactions each, for a total of approximately 100 interactions per event. A position resolution of 2 mm is assumed. Under these conditions, an efficiency of 22% and a P/T of 62% can be readily achieved at the optimum angle parameter of 10°. This represents a minimum performance in view of the fact that a search for more sophisticated methods to optimize the number of

clusters recovered has not been made. Much remains to be done here since, as mentioned, a "perfect" algorithm would produce an efficiency of 54% and a P/T of 90%.

### 4.4. Electronics and acquisition

Two prototype preamplifiers have been built, one at LBNL [21] and one at Cologne [24], and are being tested with the 12-segment prototype. Both are expected to be fast enough to be compatible with GRETA requirements. At present, the LBNL preamplifier has a ~20 ns risetime and an electronic noise of 900 eV with a cold FET. Fast ADC's with high resolution are expected to be commercially available at a reasonable price when GRETA construction could begin around 2001. We are presently testing a 250 MHz, 8-bit ADC. A prototype digital signal processing module (including filter, ADC and DSP) is being developed in connection with GRETA by the X-ray Instrumentation Associates company [23] and will be ready for tests soon. Finally, as computer technology keeps improving, we expect that it will be feasible to acquire a set of parallel computers well suited to perform the $\gamma$-ray reconstruction analysis. We believe an electronics and acquisition system which can analyze the signals "in flight" is achievable.

### 4.5. Future developments

We are presently developing algorithms to deduce the gamma-ray interaction positions from a composite signal due to multiple hits in one segment. This is the last step needed to prove that the GRETA concept is valid and can be used in an actual detector array. Much remains to be done before finalizing a design for GRETA. Prototypes will be used to compare measurements with calculations, optimize algorithms, and determine characteristics of detectors and electronics. A 36-segment detector has been ordered, and later, a 7- or 9-detector prototype should help finalize the design of the array.

## 5. GRETA capabilities for new physics

Although the GRETA detector is, in some sense, the next step in the recent development of $\gamma$-ray detector systems, it is a very large step. The improvement in performance in some areas is so large that it seems entirely new capabilities are provided. For purposes of discussing the new physics GRETA will enable, we will (somewhat arbitrarily) focus on four areas where such "new" capabilities will be realized.

One area that is entirely new is the **characterization** of an incident $\gamma$ ray through tracking; that is, measuring each interaction point and requiring consistency between the total energy and the energy and scattering angle at each point. A major advantage is that close-lying $\gamma$ rays can be separated, including ones that hit the same crystal. This also allows one to distinguish full-energy events in the crystal (those that track with low $\chi^2$) from partial-energy events (those that do not track with low $\chi^2$), thereby improving considerably the response function (peak-to-total ratio). This reduction of background is important for almost all experiments involving $\gamma$ rays. Measuring the scattering angle between the first and second interaction point gives information on the linear polarization of a $\gamma$-ray which defines its electric or magnetic character; essential information in many nuclear structure studies, e.g. the determination of the parity of nuclear levels. From simulations the polarization sensitivity, $Q(E_\gamma)$, is estimated to be 0.35, which is higher than any polarimeter ever built (even those with extremely small efficiencies). A figure of merit for polarimeters is generally taken [25] to be: $\varepsilon[Q(E_\gamma)]^2$, where $\varepsilon$ is the efficiency of the detector, and on this basis GRETA is at least 100 times better than any previous system, including Gammasphere and Euroball. In addition, tracking can distinguish $\gamma$ rays emitted by the source from those originating outside the detector; important for reducing the background in some types of experiment with low counting rates. The tracking information will become more important when one must be more certain about the nature of an event.

The **localization** of the first interaction point in a detector defines the angle of emission of that $\gamma$ ray from a source (target) of known location relative to the detector. Through tracking, GRETA will be able to locate that first interaction point to within 2 mm (FWHM), or at a distance from the source (to the average depth of the first interaction around 1 MeV) of 15 cm, to within a FWHM angle of 0.8°. For a standard Gammasphere-size detector (~7 cm dia.) at a typical distance of 25 cm from the source, this FWHM angle is about 8°, an order of magnitude worse. This angular resolution is especially important when detecting $\gamma$ rays emitted by a fast-moving source because such $\gamma$ rays have a Doppler energy shift that depends on the angle of emission, and this creates an energy spread in a detector that depends on the uncertainty in the angle of emission defined by the localization. As an example consider the study of neutron-rich light nuclei, where the production of near-drip-line nuclei is by fragmentation reactions resulting in product velocities v/c of 30%, or higher. For a 1 MeV $\gamma$ ray emitted at 90° to the beam direction, the contribution to the FWHM of the energy spread due to the Doppler broadening would be 39 keV with a standard Gammasphere detector, while it would be 3.7 keV with GRETA. This improvement can have a large effect on the physics, both in detecting weak $\gamma$ rays and in separating nearby peaks. An example of this type of experiment was the Coulomb excitation of a secondary beam of $^{44}$S produced in the primary fragmentation reaction $^{48}$Ca+$^{9}$Be [26]. The $^{44}$S beam was subsequently Coulomb excited in a thin gold foil at the center of an array of position-sensitive NaI detectors. Due to its better intrinsic resolution, localization and efficiency, GRETA would have ~100 times more sensitivity for detecting the resulting 1.3-MeV $\gamma$ rays than the NaI array. Localization is important for other experiments involving large recoil velocities, e.g. those using inverse-reaction kinematics and many Coulomb-excitation studies.

GRETA has a much higher **efficiency** for detecting full-energy $\gamma$ rays than previous detector systems, especially for high-energy $\gamma$ rays; e.g. at 10 MeV the efficiency is more than an order of magnitude larger than in previous arrays. This high efficiency is

due to: 1) the $4\pi$ germanium coverage, whereas detectors like Gammasphere and Euroball have closer to $2\pi$ germanium coverage; and 2) the "add-back" feature of GRETA, where $\gamma$ rays can be tracked out of one germanium crystal and into an adjacent one, and by adding the appropriate interaction points, the full energy can be recovered. The gain of GRETA efficiency over Gammasphere efficiency is roughly a factor of: 3, 6 and 20, respectively, for the energies of 0.1, 1, and 10 MeV. While the gain is large everywhere, it increases with increasing $\gamma$-ray energy due to GRETA's improved ability to collect larger showers. This efficiency will be especially important in ISOL experiments where the beam intensities are likely to be low, and in giant resonance experiments where the combination of high efficiency and high energy resolution is unprecedented. An interesting example outside the nuclear-structure area is the accurate measurement of the decay probability of positronium into four $\gamma$ rays. This experiment requires detection of five $\gamma$ rays, the four just mentioned plus one for identification (through the the 1.275 MeV $\gamma$ ray associated with the decay of $^{22}$Na), and GRETA will have about 500 times the probability of detecting such a decay compared with detectors such as Gammasphere or Euroball. The present limit for the decay of triplet positronium into four gamma rays is, $4\gamma/3\gamma < 10^{-5}$, and the estimated five $\gamma$-ray detection rate with GRETA is about 10 per second, indicating that the limit could probably be reduced by a factor of 100 or more. This is an enormous improvement in such an experiment.

One of the principal driving forces for the development of detector systems such as Gammasphere and GRETA has been the high-spin studies following fusion reactions. These are cases where there are high multiplicity (20-30) $\gamma$-ray cascades and the interesting physics is often in very rare cascades (e.g. superdeformed bands). As discussed earlier, a measure of the **sensitivity** in these kinds of studies is the "resolving power", which combines energy resolution, efficiency, response function, granularity and rate in an appropriate way. An important property of GRETA, due to newly designed electronics, is that it will be able to sustain counting rates more than 20

times higher than Gammasphere (about $4x10^4$ per second per sector or more than $2x10^5$ per second for each detector) and this large gain in rate is important for many types of experiments. Consider a typical fusion reaction experiment where the average angular momentum left in the product nucleus is around $40\hbar$, resulting in the emission of ~20 $\gamma$ rays per event with average energy 1 MeV. Gammasphere would catch an average of 2 full-energy $\gamma$ rays per event; whereas, GRETA will catch between 5 and 10, and these 5 or 10 could be accumulated at more than 20 times the rate. It is clear that this will bring a qualitative improvement in the experiments. For example, the linking transitions between superdeformed and normally deformed states are very difficult to detect now -- only a few cases known with several linking transitions in those cases -- but GRETA's much greater sensitivity may be able to resolve completely this decay (perhaps hundreds of pathways), providing unprecedented information on the energy levels between the superdeformed band and the ground state. There are many other examples where the large gain in sensitivity with GRETA will be crucial.

GRETA has a variety of new capabilities which will be used in various combinations to accomplish the goals of many types of physics. The objective of this section has been to give some hint of this variety.

## 6. Conclusion

GRETA, the next generation $\gamma$-ray detector array, successor of Gammasphere and Euroball, goes beyond the limit reached by these arrays which were based on Compton suppression. GRETA uses the new concept of $\gamma$-ray tracking, made possible largely by technical advances in Ge detector segmentation. This leads to large gains in resolving power and also to new kinds of measurements, such as the event-by-event characterization of $\gamma$ rays, and the detection of high-energy, high-resolution $\gamma$ rays. Gamma-ray detector evolution is important for many types of physics.

## Acknowledgements

We would like thank F.S. Goulding, D. Landis and M. Maier for illuminating discussions. This work was supported by the Director, Office of Energy Research, Division of Nuclear Physics of the Office of High Energy and Nuclear Physics of the U.S. Department of Energy under Contract No. DE-AC03-76SF0098.

## References

[1] Gammasphere Proposal, ed. M.A. Deleplanque and R.M. Diamond, Lawrence Berkeley National Laboratory, Report 5202 (1988).

[2] P.J. Nolan, F.A. Beck and D.B. Fossan, Ann. Rev. of Nucl. and Part. Sci. 45 (1994) 561; C.W. Beausang and J. Simpson, J. Phys. G: Nucl. Part. Phys. 22 (1996) 527 and references therein.

[3] J. Simpson, Z. Phys. A358 (1997) 139.

[4] A.J. Tavendale and G.T. Ewan, Nucl. Instr. and Meth. 25 (1963) 185.

[5] A. Johnson, H. Ryde and J. Sztarkier, Phys. Lett. 34B (1971) 605.

[6] F.S. Stephens and R.S. Simon, Nucl. Phys. A183 (1972) 257.

[7] R.H. Pehl, R.C. Cordi, and F.S. Goulding, IEEE Trans. Nucl. Sci. 19 (1972) 265, and references therein.

[8] P.Twin at al., Nucl. Phys. A409 (1983) 343c; and P.J. Nolan, D.W. Gifford and P.J. Twin, Nucl. Instr. and Meth. A236 (1985) 95.

[9] R.M. Diamond and F.S. Stephens, LBL Report (1981) unpublished; and R.M. Diamond, Proc. Conf. on Instrumentation for Heavy Ion Nuclear Research (Nucl. Sci. Research Conf. Series 7) ed. D. Schapira (Harwood) p.259.

[10] P. Twin et al., Phys. Rev. Lett. 57 (1986) 811.

[11] F.S. Stephens, private communication.

[12] T.E. Drake et al., The TRIGAM Spectrometer Proposal, AECL (October 1992), unpublished.

[13] T.L.Khoo et al., Phys. Rev. Lett. 76 (1996) 1583.

[14] F.A. Beck et al., Proc. of the Int. Conf. on Nucl. Struct. at High Ang. Momentum, Ottawa (1992), p.364 and F.A. Beck, Proc. of the Conf. on Phys. from Large Gamma-ray Detector Arrays, Berkeley (1994), p. 154.

[15] J. Eberth, Prog. Part. Nucl. Phys. 28 (1992) 495; and J. Eberth et al., Nucl. Instr. and Methods A369 (1996) 135.

[16] F.S. Goulding and D.A. Landis, IEEE Trans. on Nucl. Sci. 41 (1994) 1145.

[17] Gammasphere Baseline Review Document, ed. D. Cline, Nuclear Structure Research Laboratory, University of Rochester, Report NSCR-366 (1991) p.3-17.

[18] I.Y. Lee, private communication.

[19] G. J. Schmid et al., IEEE Trans. on Nucl. Sci. 44 (1997) 975 ; and to be published in Nucl. Instr. and Methods.

[20] R. Brun, F. Bruyant, M. Maire, A.C. McPherson, P. Zanarini, GEANT3 users' guide, DD/EE/84-1, CERN 1987.

[21] H. Yaver et al., private communication.

[22] K. Vetter et al., to be published in Nucl. Instr. and Methods.

[23] B. Hubbard-Nelson et al., Proc. 9th Symp. on Radiation Meas. and Applications, May 11-14, 1998, Ann Harbor, Michigan, to be published in Nucl. Instr. and Meth. in Phys. Res.

[24] J. Eberth, private communication.

[25] G.J. Schmid et al., Nucl. Instr. and Meth., accepted.

[26] T. Glasmacher et al., Phys. Lett. B395 (1997) 163.

## Figure Captions

Fig. 1. Schematic drawing of a clover detector (from [14]).

Fig. 2. Schematic diagram (side view cross section) of a cluster of 7 HPGe detectors (5 visible) surrounded by their BGO Compton suppressor (from [15]).

Fig. 3. Schematic view of interactions (dots) of an incident $\gamma$ ray in highly segmented HPGe detectors. The positions and energies of the interactions are used to reconstruct the energy and angle of the incident $\gamma$ ray.

Fig. 4. Schematic view (from the back) of a Gammasphere segmented HPGe detector.

Fig. 5. Current signals on three electrodes (right) from a charge drifting toward the outside electrodes. The position of the interaction is shown as a dot on the detector cross section (left). The current from the destination electrode is the solid line and its integral is the net charge which gives the energy. The current from each neighboring electrode (dashed lines) integrates to zero.

Fig. 6. Schematic perspective view (from the back) of the 12-segmented HPGe first GRETA prototype. The segmentation of the outer electrode is indicated as dashed lines.

Fig. 7. Charge signals calculated in segments 1,2,3,4 (see inset in top left panel), for a grid of interaction points in segment 1 defined by $1\text{mm} \leq Y \leq 28\text{mm}$, $6\text{mm} \leq R \leq 33\text{mm}$ and $\Delta R = \Delta Y = 3\text{mm}$ (see text).

Fig. 8. Schematics of GRETA data flow.

Fig. 9. Resolving Power as defined in eq. (1) as a function of photopeak efficiency for various values of R, the gain in peak-to-background per fold (see paragraphs 2.2.d and 3.5.a). The solid lines correspond to $\ln N_0/N$ of eq. (1) of 19.5, valid for previous arrays. The dashed lines correspond to the value $\ln N_0/N$ of 22.6, valid for GRETA (see text).

Fig. 10. Signals for incident $\gamma$ rays of 662 keV collimated to positions marked A) (X=1 cm, Y=0.2 cm, top) and B) (X=2 cm, Y=0.2 cm, bottom) in the top view of the 12-segmented GRETA prototype shown at the top of the figure. The shaded area represents the front face and the dashed lines are the segmentation lines. Left panels: measured net charge signals (in segment 1). Center (right) panels: measured (calculated) transient charge signals in segment 6.

Fig. 11. Efficiency and P/T ratios deduced from the present tracking algorithm of [19] for a realistic GRETA geometry (realistic gaps and absorption in the Al cans) and an assumed position resolution of 2 mm for events consisting of 25 $\gamma$ rays of 1.332 MeV. The dashed line represents the performance of Gammasphere.

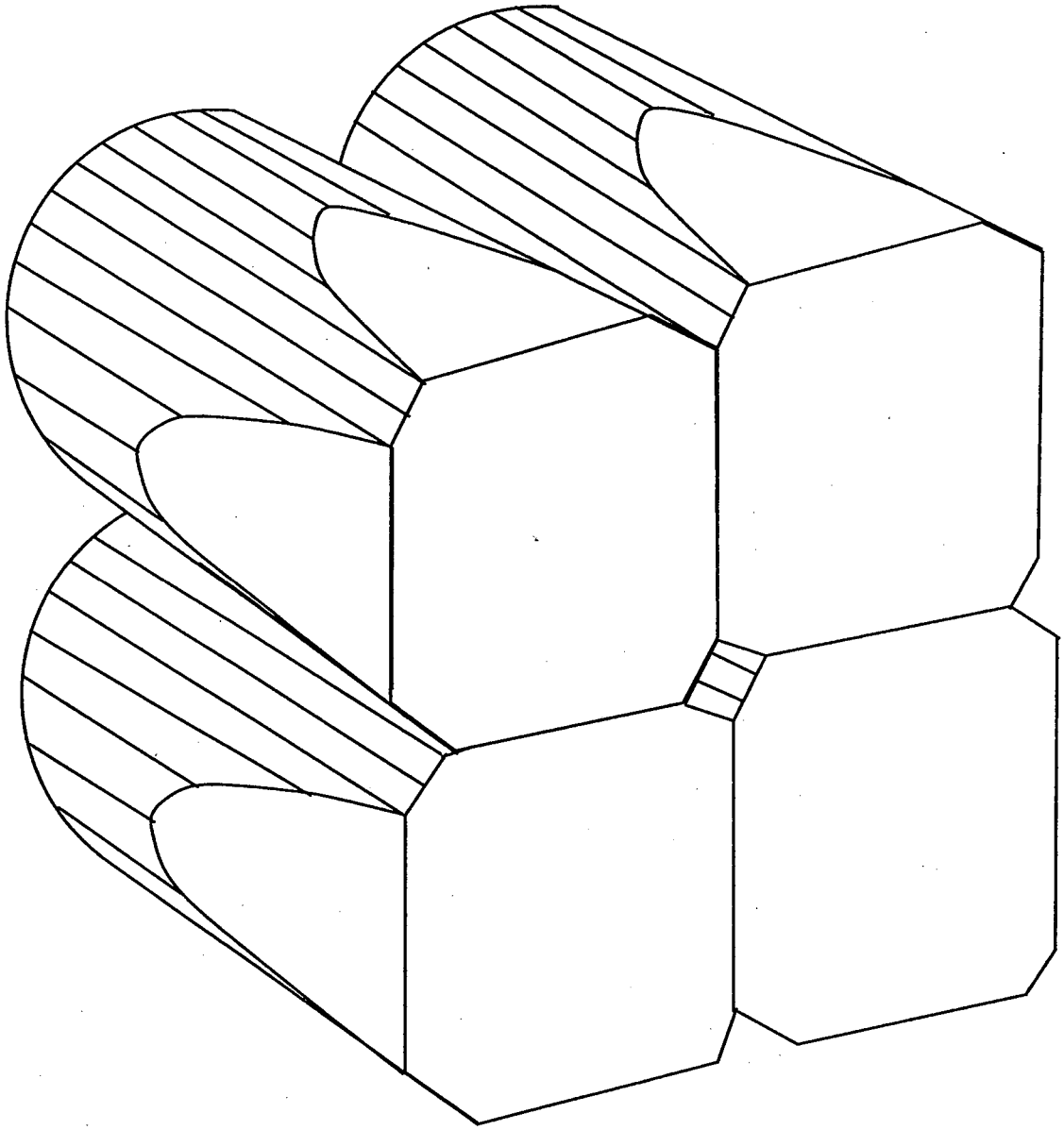

Fig. 1

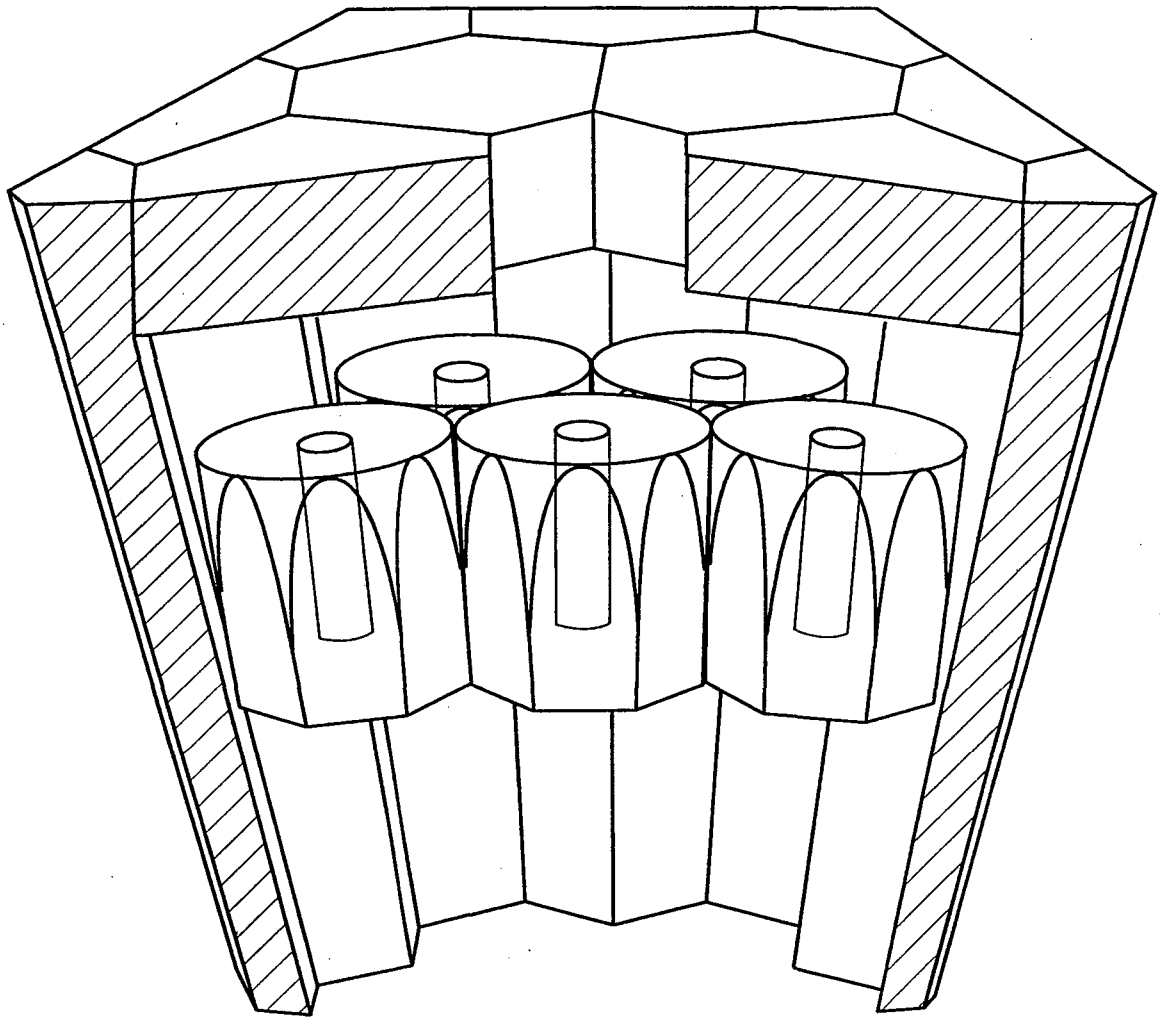

Fig.2

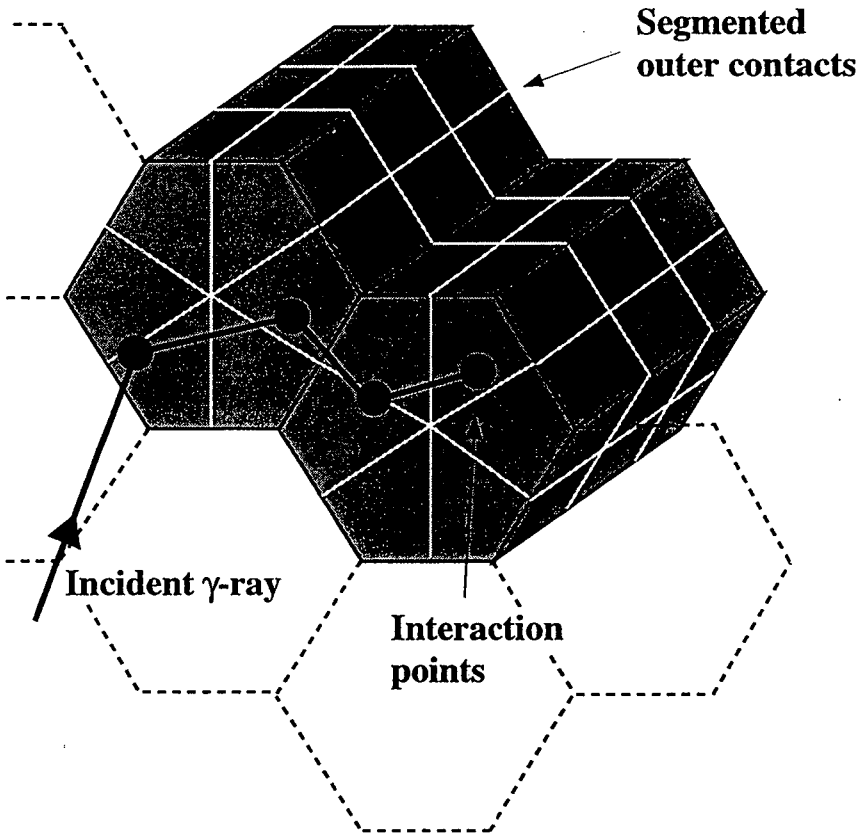
Segmented
outer contacts
Incident γ-ray
Interaction
points

Fig. 3

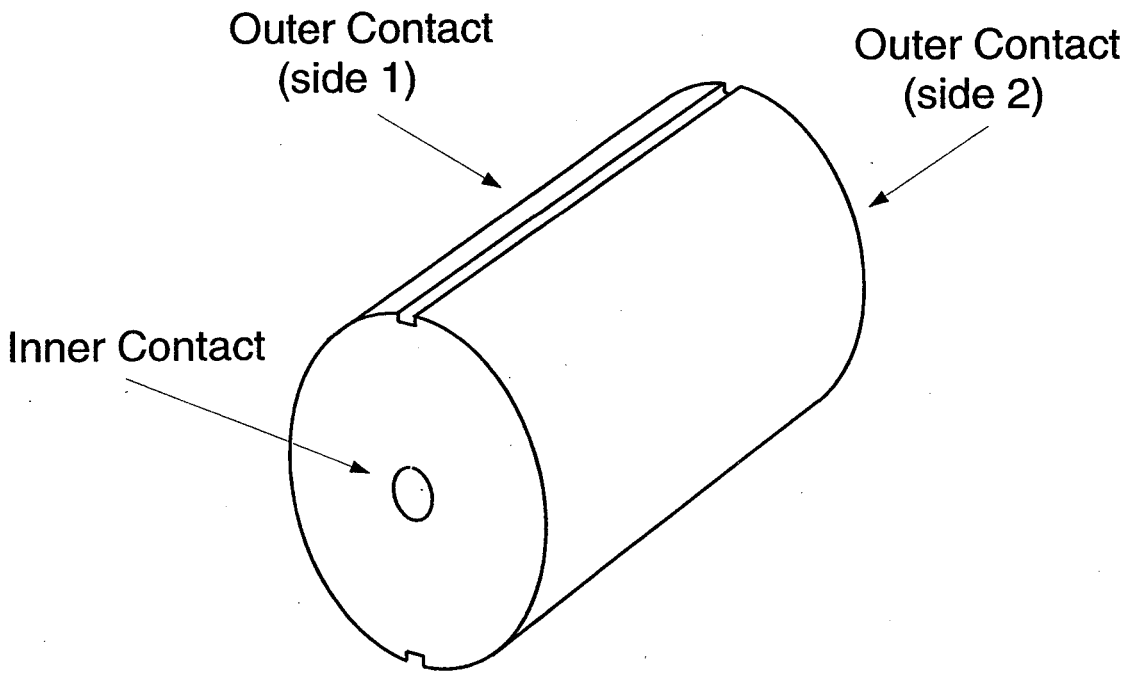


Fig. 4

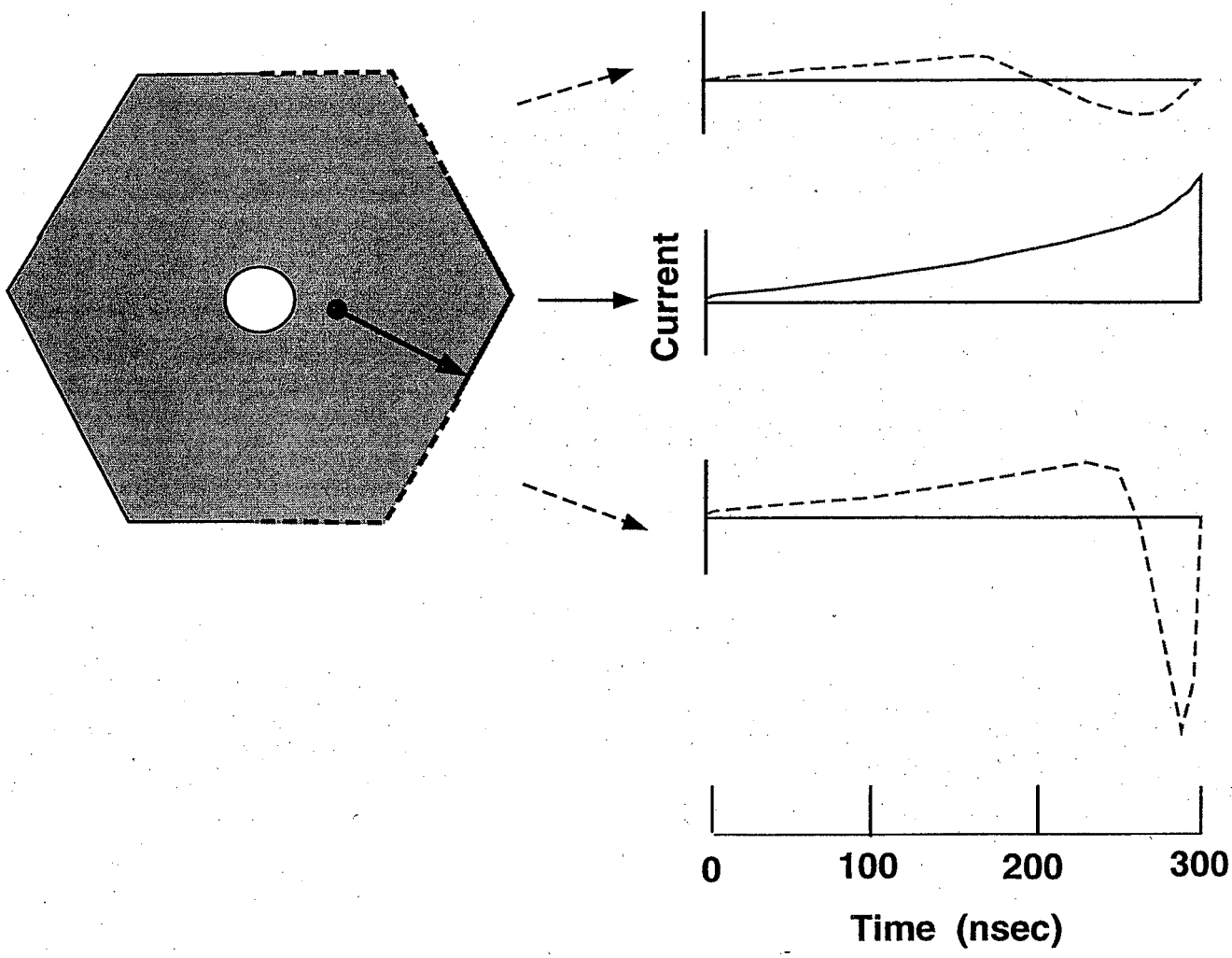


Fig. 5

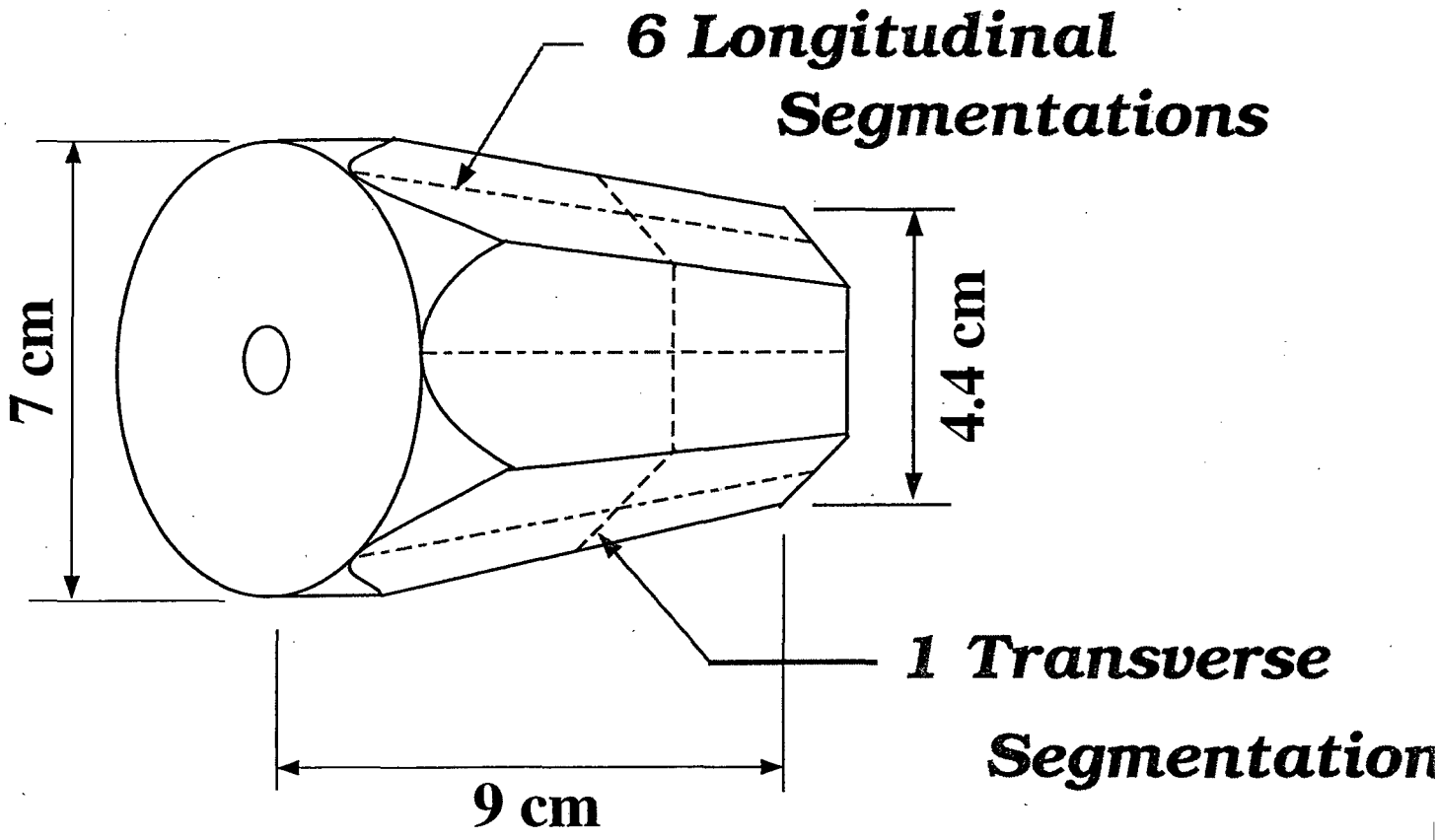
6 Longitudinal
Segmentations
7 cm
4.4 cm
1 Transverse
Segmentation
9 cm

Fig. 6

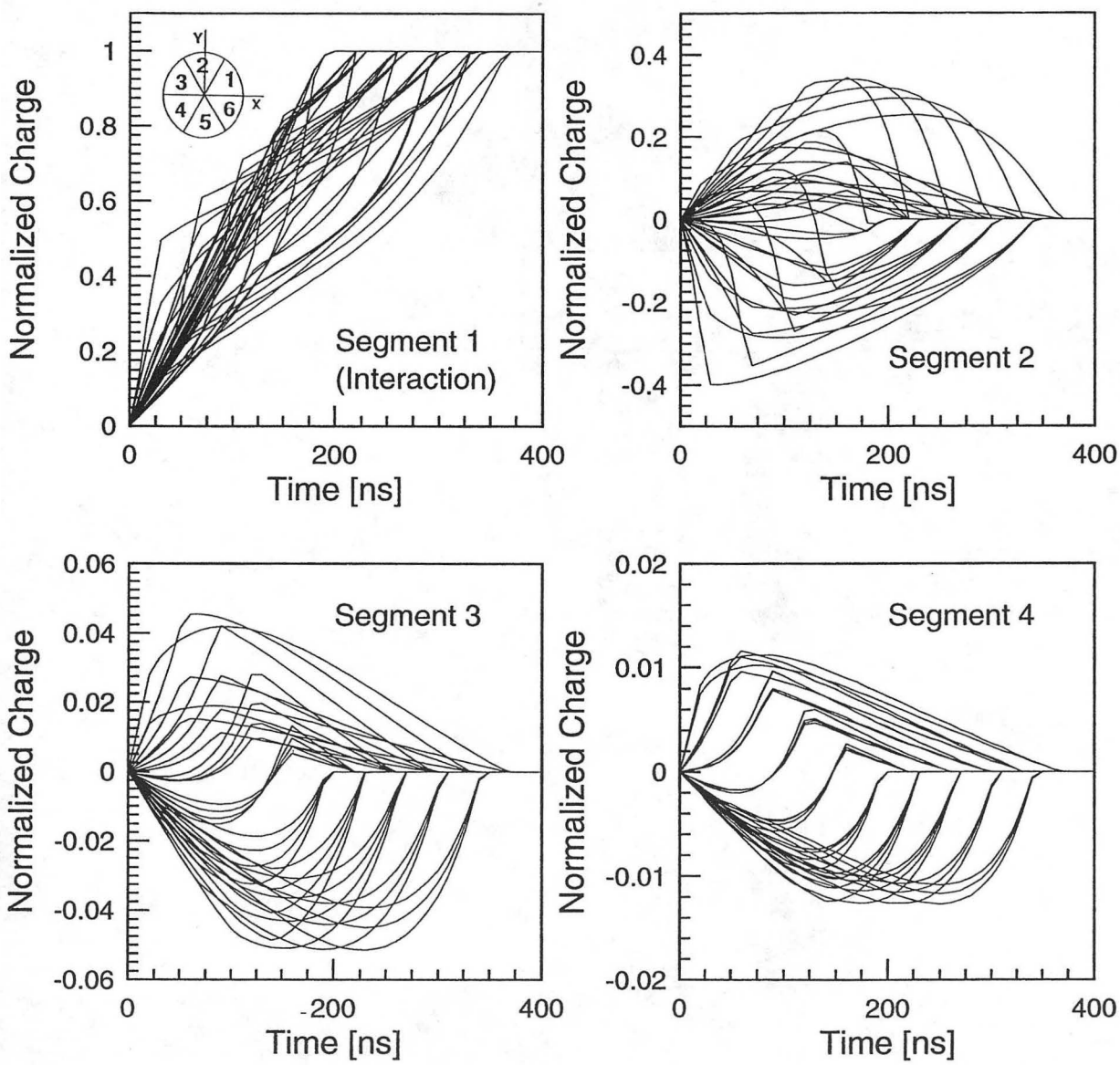
Normalized Charge
Time [ns]
Segment 1
(Interaction)
Segment 2
Segment 3
Segment 4
Y
X
1
2
3
4
5
6

Fig. 7

# GRETA Data Flow

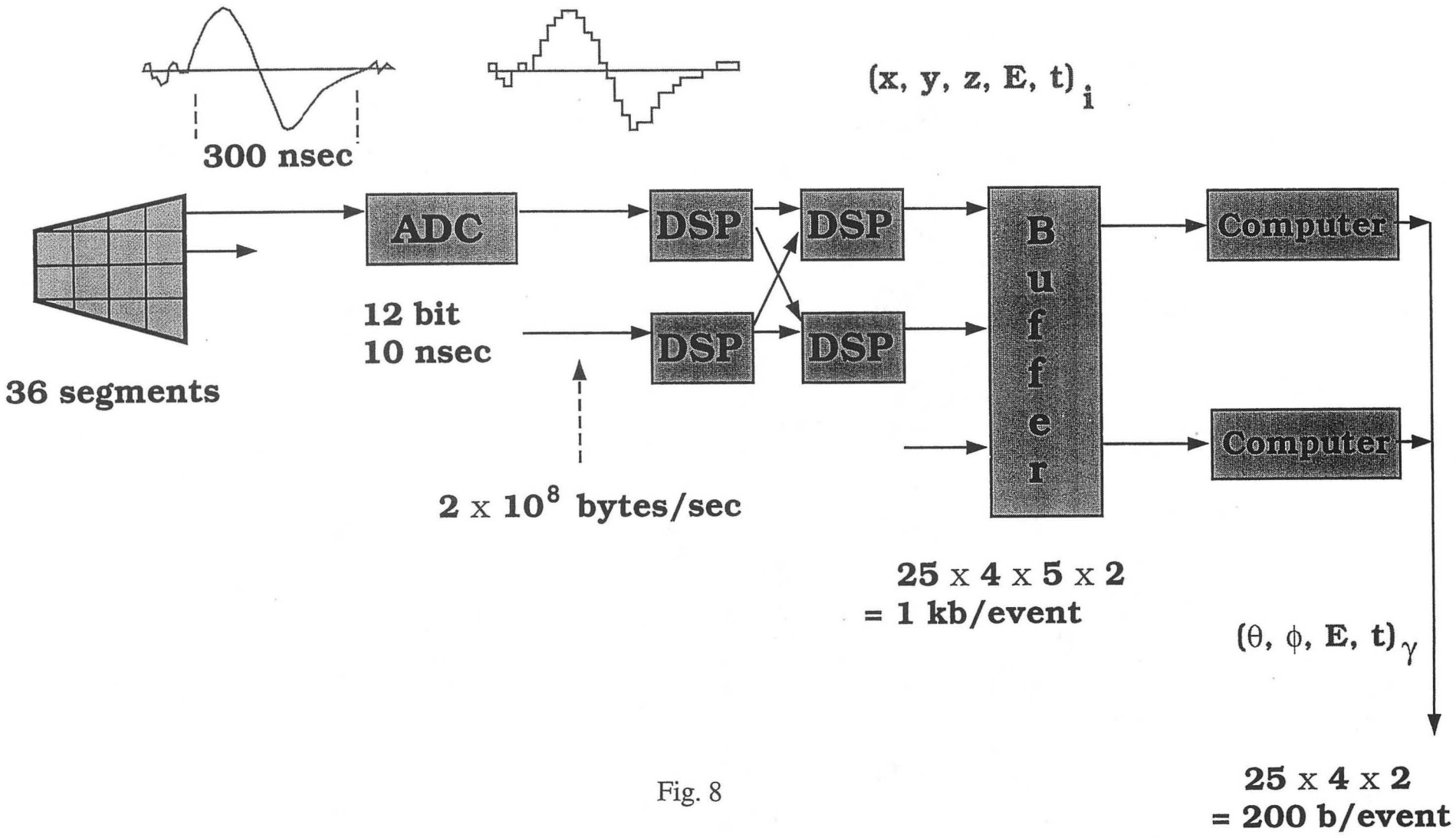


Fig. 8

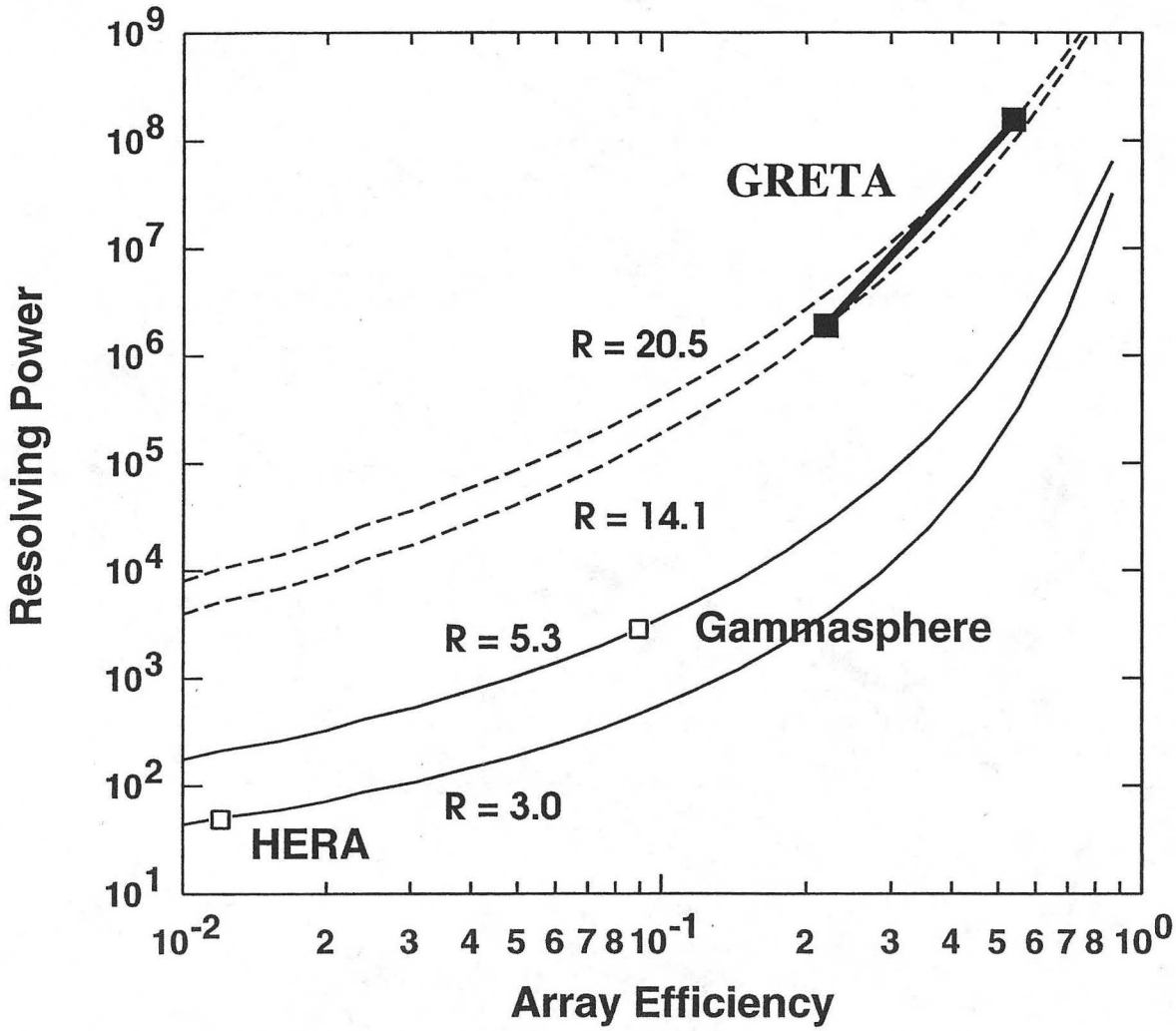
Resolving Power
Array Efficiency
GRETA
R = 20.5
R = 14.1
R = 5.3
Gammasphere
R = 3.0
HERA
$10^9$
$10^8$
$10^7$
$10^6$
$10^5$
$10^4$
$10^3$
$10^2$
$10^1$
$10^{-2}$
2 3 4 5 6 7 8 $10^{-1}$ 2 3 4 5 6 7 8 $10^0$

Fig. 9

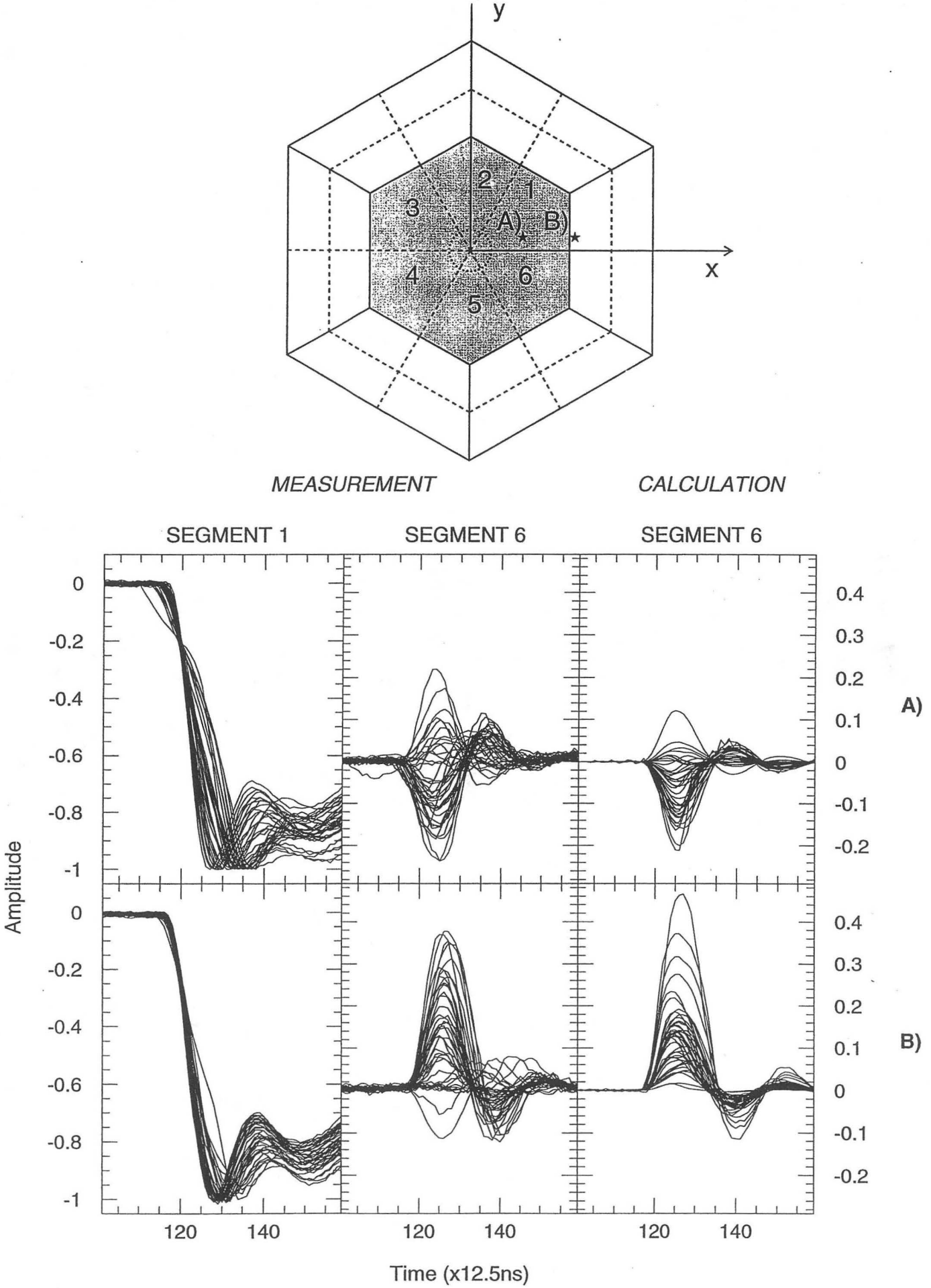
y
x
1
2
3
4
5
6
A)
B)
MEASUREMENT
CALCULATION
SEGMENT 1
SEGMENT 6
SEGMENT 6
Amplitude
Time (x12.5ns)
A)
B)

Fig. 10

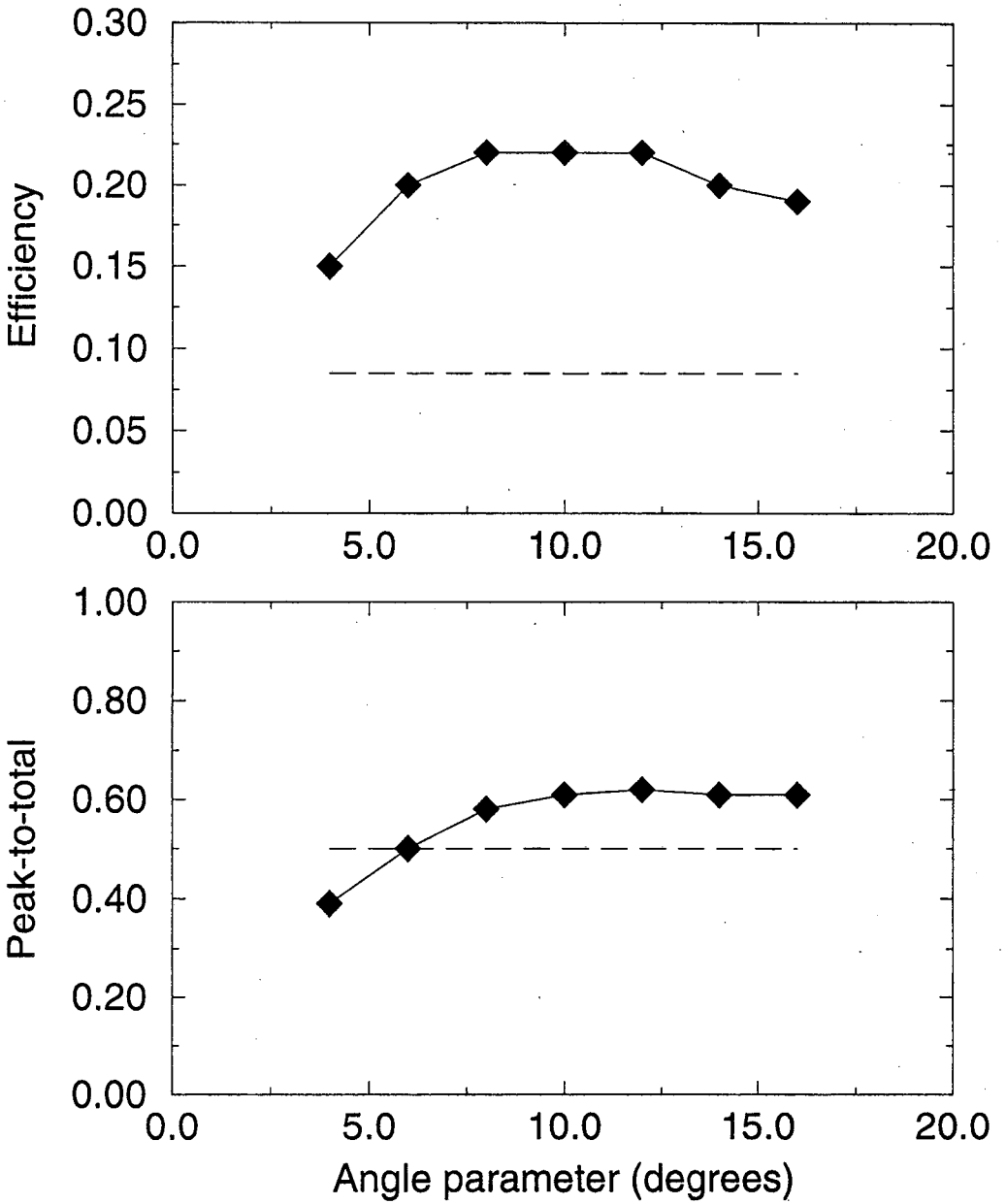
0.30
0.25
0.20
0.15
0.10
0.05
0.00
Efficiency
0.0
5.0
10.0
15.0
20.0
1.00
0.80
0.60
0.40
0.20
0.00
Peak-to-total
0.0
5.0
10.0
15.0
20.0
Angle parameter (degrees)

Fig. 11

Ernest Orlando Lawrence Berkeley National Laboratory
One Cyclotron Road | Berkeley, California 94720

Prepared for the U.S. Department of Energy under Contract No. DE-AC03-76SF00098