LBNL-44037

ERNEST ORLANDO LAWRENCE
BERKELEY NATIONAL LABORATORY

Progress Report of the 3rd Generation ECR Ion Source Fabrication

M.A. Leitner, S.A. Lundgren, C.M. Lyneis,
C.E. Taylor, and D.C. Wutte

Nuclear Science Division

May 1999

Presented at the
14th International Workshop on ECR Ion Sources (ECRIS99),
Geneva, Switzerland,
May 3–6, 1999,
and to be published in
the Proceedings

REFERENCE COPY
Does Not
Circulate
Bldg. 50 Library - Ref.
Lawrence Berkeley National Laboratory
Copy 1
LBNL-44037

DISCLAIMER

This document was prepared as an account of work sponsored by the United States Government. While this document is believed to contain correct information, neither the United States Government nor any agency thereof, nor the Regents of the University of California, nor any of their employees, makes any warranty, express or implied, or assumes any legal responsibility for the accuracy, completeness, or usefulness of any information, apparatus, product, or process disclosed, or represents that its use would not infringe privately owned rights. Reference herein to any specific commercial product, process, or service by its trade name, trademark, manufacturer, or otherwise, does not necessarily constitute or imply its endorsement, recommendation, or favoring by the United States Government or any agency thereof, or the Regents of the University of California. The views and opinions of authors expressed herein do not necessarily state or reflect those of the United States Government or any agency thereof or the Regents of the University of California.

LBNL-44037

Progress Report of the 3rd Generation ECR Ion Source Fabrication

M.A. Leitner, S.A. Lundgren, C.M. Lyneis, C.E. Taylor, and D.C. Wutte

Nuclear Science Division
Ernest Orlando Lawrence Berkeley National Laboratory
University of California
Berkeley, California 94720

May 1999

This work was supported by the Director, Office of Energy Research, Office of High Energy Physics and Nuclear Physics Division, of the U.S. Department of Energy under Contract No. DE-AC03-76SF00098.

Progress Report of the 3rd Generation ECR Ion Source Fabrication

M.A. Leitner, S. A. Lundgren, C.M. Lyneis, C.E. Taylor, D.C. Wutte
Lawrence Berkeley National Laboratory, 1 Cyclotron Road, Berkeley, CA 94720, USA

ABSTRACT

Recent progress in the construction of the 3rd Generation ECR ion source at the 88-Inch Cyclotron in Berkeley is reported. Test results of a full scale prototype superconducting magnet structure, which was described in the last ECR Ion Source Workshop, lead to an improved coil design for the 3rd Generation ECR ion source. Solenoids of the new design have been fabricated and exceeded the design field values without quench. The new sextupole coils are currently being wound and will be tested this summer. This magnet structure consists of three solenoids and six race track coils with iron poles forming the sextupole. It is described in the report along with the structural support and coil winding specifications. The coils are designed to generate a 4T axial mirror field at injection and 3T at extraction and a radial sextupole field of 2.4 T at the plasma chamber wall. The high axial magnetic field of the 3rd Generation ECR ion source influences ion beam extraction considerably and we have initiated simulations of the extraction and beam transport system in order to enhance transmission through the injection beam line of the cyclotron.

1. INTRODUCTION

With the construction of the superconducting 3rd generation ECR ion source we expect to further enhance the performance of the 88-Inch Cyclotron by providing more intense highly charged heavy-ion beams. Higher beam intensities will be required especially for low cross-section experiments for heavy-element research using the new "Berkeley Gas-filled Spectrometer" (BGS) now on line at the cyclotron. On the other hand, an increase of the usable mass range up to uranium is desirable for nuclear structure research using state-of-the-art gamma-ray detectors such as "Gammasphere".

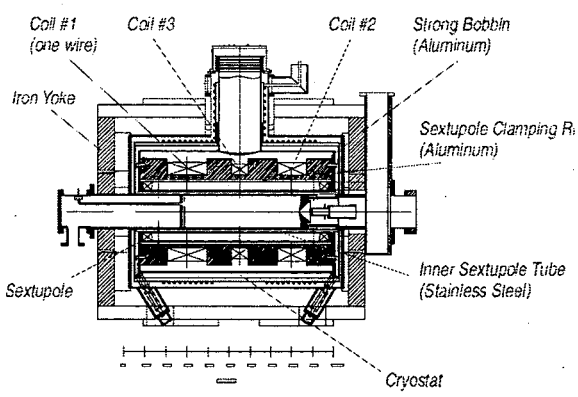

Fig. 1: Mechanical layout of the 3rd generation ECR ion source.

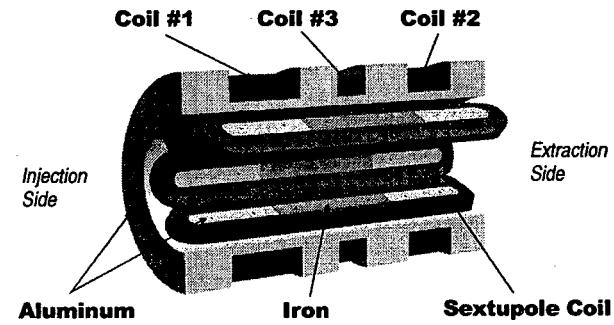

Fig. 2: *Cutout drawing of the superconducting coil configuration of the 3rd generation ECR ion source.*

Figure 1 shows the mechanical layout of the ion source. The plasma chamber is made out of a double-walled aluminum tube with water cooling-channels in between. Three or more off-axis microwave feeds as well as ovens and a biased disk are inserted from the injection spool. Also shown are the end walls of the iron shielding-yoke, which is designed to reduce the magnetic stray-field outside the yoke to <50 Gauss. Figure 2 shows a cutout of the superconducting coil configuration of the 3rd generation ECR ion source, which is designed to generate magnetic fields considerably greater than those of any existing ECR ion source. The two outermost solenoids produce an axial magnetic mirror field, whose center strength can be lowered by a third, oppositely polarized solenoid. The sextupole field is generated by the six racetrack coils wound around a pole piece made of iron and aluminum.

Table 1: *Design characteristics of the 3rd generation ECR ion source magnet structure.*

ID of plasma chamber	15 cm
Mirror field on axis	4.0 T (at injection), 3.0 T (at extraction)
Mirror-mirror spacing	50 cm
Central field	0-1.0 T (variable)
Max. radial field, plasma wall	2.4 T
Min. field, plasma wall	2.0 T

Characteristic field data - as calculated by the three-dimensional code TOSCA - are summarized in Table 1. The design and fabrication of the magnet structure is based on a collaborative effort between the 88-Inch

cyclotron of the Nuclear Science Division and the Supercon Group in the Accelerator and Fusion Research Division at Lawrence Berkeley National Laboratory.

2. NEW MAGNET DESIGN FOR THE 3RD GENERATION ECR ION SOURCE

Since the most critical technology of the 3rd generation ECR ion source centers on the design, fabrication, and performance of these superconducting coils, we built and tested a prototype magnet system utilizing surplus wire from the "Superconducting Super Collider" (SSC). Results of the magnet test were reported in [1]. Coil #1 (at the injection side, see Fig. 2) reached only 71% of its design value, while coil #2 and #3 reached their design values. In addition, the training behavior of the sextupole coils under combined tests with the axial mirror coils indicated movement of individual sextupole coils caused by Lorentz forces, thus limiting the maximum magnetic field. These results led to a new, improved coil design for the 3rd generation ECR ion source.

2.1 Mechanical Design of the New Solenoids and Support Structure

Solenoid coil #1 is designed to produce a peak magnetic field of 4 T at the injection side. Its prototype had a graded design with two different superconducting wires: Wire with lower copper/superconductor ratio of 1.3 (compared to 1.8 for the outer section) had been used for the inner coil region. The purpose of this arrangement was to reduce the current density carried by the superconductor on the inner side of the coil, where the magnetic field is highest.

A preliminary structural analysis had shown that stresses in the coil might be too large to be supported entirely by the conventional prototype coil bobbin. Therefore, the prototype design relied on the strength and stiffness of the epoxy-potted windings. However, because of the coil thickness in radial direction, the stresses became too high. Consequently, coil #1 reached only 71% of its designed field value. Therefore, the shape as well as the structural support of the coil had to be improved.

The experiences with the prototype magnet-structure lead to a new bobbin design, which is shown in Fig. 1. It is much thicker than the prototype design, improving the axial support for the mirror coils and the radial compression for the sextupole coils (see following section). The new design incorporates a 340 mm inner-diameter axial-solenoid winding compared to 300 mm for the prototype design to allow space for a structural compression cylinder over the sextupole coil. Space is also provided for approximately 10 mm total radial thickness for a structural support band surrounding the solenoid coils. Aluminum alloy wire with rectangular cross section, similar in size to the superconductor, is wound over the coil OD for added structural support. This wire is "wet wound" with filled Stycast and with fiberglass between layers. Details of the required winding tensions for the structural banding are given in [4].

Furthermore, the new design uses only one type of wire for the solenoid coils. A rectangular superconducting wire is used to increase the copper content in the coil (while still maintaining a similar current density), because quench tests with the magnet prototype showed that the surplus SSC wire did not contain enough copper for stable operation. The coil shape has been changed to reduce stresses on the solenoids: The new coils are wider and thinner. Operating conditions of the new solenoid wire are summarized in Table 2.

Table 2: *Operating conditions of the new superconducting solenoid wire.*

Cross section	1.650 mm x 0.875 mm rectangular
Current	215 A
Current density	120 A / sq. mm
Current margin	2.63 (coil #1), 3.12 (coil #2), 4.06 (coil #3)
Cu/Sc ratio	4
Total number of turns	6272 (coil #1), 4480 (coil #2), 2208 (coil #3)

The assembly of the solenoid structure was finished in September 1998. Magnet tests were performed in an existing test-cryostat, and the coils exceeded the design-current values without quench. Because of power-supply limitation, the maximum current density was not evaluated.

2.2 Mechanical Design of the Sextupole Coils and their Support Structure

The sextupole design of the 3rd generation ECR ion source incorporates two unique features as compared to other superconducting ECR sources:

1. The use of iron poles (see Fig. 2) in the superconducting sextupole structure increases the maximum sextupole field by ~10% and decreases the axial field in the center region.
2. The ends of the sextupole have been extended in axial direction away from the solenoid coils to reduce the forces on the end sections, where they are highest (see [1], [2]).

The prototype sextupole magnet reached 104% of its design current when tested alone, but achieved only 95% in combined tests with the axial coils. During

these tests the axial coils have been excited to only 60%(coil #1) and 80%(coil #2) of its design values due to the limitations of coil #1. The sextupole quenched several times before training up to the stated current levels. This training behavior is believed to be related to movement of individual coils caused by the Lorentz forces.

A sample of the superconducting wire-epoxy assembly from a spare sextupole coil was analyzed in respect to its thermal contraction characteristics. The results [3] are summarized in Table 3 together with contraction values for copper, iron, stainless steel and aluminum:

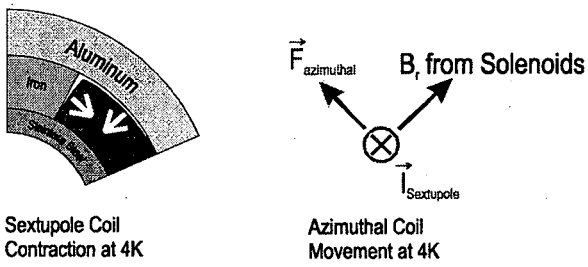

Fig. 3: *The training behavior of the prototype sextupole indicated movement of individual coils caused by the Lorentz forces. After cooling, the center sections may have been poorly constrained in the azimuthal direction and this made macroscopic movements of the coils possible.*

The most likely explanation for the sextupole movement is that the thermal contraction of the sextupole coils was too large to maintain the prestress on the coils applied by the aluminum clamping ring, as shown in Fig. 3. After cooling, the center sections may have been poorly constrained in the azimuthal direction and this made macroscopic movements of the coils possible.

Table 3: *Average integrated thermal contractions from 293 K to 77 K for a coil specimen of a prototype sextupole-winding. Comparison data are given for copper, iron, stainless steel and aluminum*

Parallel to strands	0.280 %
Normal to strands, normal to interlayer glass	0.674 %
Normal to strands, parallel to interlayer glass	0.491 %
Copper 101 OFHC	0.303 %
Iron	0.197 %
Stainless steel 316	0.281 %
Aluminum 6061	0.391 %

Therefore, a new superconducting sextupole design has been developed, which provides greater prestress to the sextupole. As described above the larger diameter solenoid allows space for a structural compression cylinder over the sextupole coil. The sextupole coil's nominal OD is 272 mm which allows space for a 14 mm thick compression cylinder (and 20 mm solenoid bobbin). The new superconducting sextupole wire has more favorable thermal contraction properties (see Table 4) than the previously used one. Consequently the outer aluminum ring has a higher thermal contraction than the coil and a compressive radial pressure occurs at the coil outer perimeter when the magnet is cooled to cryogenic temperatures. Additional support comes from pre-stretched stainless steel wire wound over the wet-wound sextupole windings.

Table 4: *Average integrated thermal contractions from 293 K to 77 K for a coil specimen of the new sextupole winding.*

Parallel to strands	0.283 %
Normal to strands, normal to interlayer glass	0.444 %
Normal to strands, parallel to interlayer glass	0.381 %

After the structural cylinder has been installed on the sextupole coil and machined to its final size (nominally 300 mm), the solenoid bobbin ID, with the axial coils in place, has to be machined to accept insertion of the sextupole assembly. Maximum clearance should be 0.005 inches on the diameter.

The stainless-steel end parts of the prototype have been replaced with pieces made of aluminum, as shown in Fig. 2 to match the thermal contraction properties of the sextupole pole pieces to the superconducting wires better. Iron has less thermal contraction than the superconductor does (parallel to the strands) and aluminum has more thermal contraction (see Table 3). This combination results in less longitudinal stress on the sextupole windings after cool-down.

A further prestress enhancement of the sextupole structure is achieved by inserting a "bladder" between the coil windings and as well at the end section. The principle of the "bladder" is explained in Fig. 4. A bladder made from welded stainless steel sheets is inserted between the windings. Then liquid Incaloy metal at 120 degrees Fahrenheit is pumped into the bladder under 1000 psi pressure and let cool down. This new method allows efficient prestressing of the sextupole structure to minimize coil movements under the strong magnetic fields of the axial solenoids.

Operating conditions of the new sextupole wire are summarized in Table 5: The sextupole coil winding has begun and will be completed beginning of June. After testing of the sextupole magnets the source-cryostat fabrication will begin. Special high-Tc current leads will be used between helium and liquid nitrogen temperature to minimize the heat leak. Most of the heat

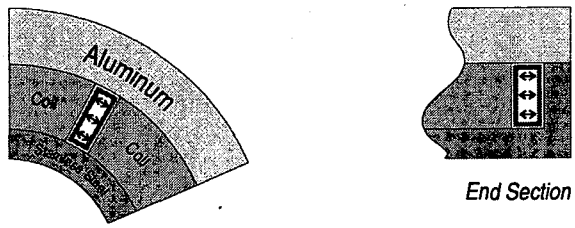

Clamping Principle
of the Sextupole "Bladder"

Fig. 4: *A further prestress enhancement of the sextupole structure is achieved by inserting a "bladder" between the coil windings and as well at the end section*

load into the cryostat comes from these current feedthroughs. We plan to use two cryocoolers to maintain the required He as well as LN temperature.

The design of the conventional ECR source components and a new beam line for the injection into the cyclotron is already under way. In addition, we are evaluating options for commercially available microwave tubes from 14 GHz to 28 GHz. Most likely, we will start operation of the superconducting ECR ion source by using an 18 GHz amplifier system. First beam injection into the cyclotron is planned in the year 2001.

Table 5: *Operating conditions of the new sextupole wire.*

Cross section	1.9 mm x 1.0 mm rectangular
Current	429 A
Current density	200 A / sq. mm
Current margin	1.75
Cu/Sc ratio	3
Total number of turns	648 (per sextupole coil)

3. BEAM TRANSPORT LINE

The magnetic design of the 3rd generation ECR ion source has a maximum axial field of 3 T at the extraction side. Due to the size of the superconducting coils, the distance from the plasma outlet aperture to the exit of the iron shielding yoke is about 30 cm. At full coil excitation the axial magnetic field drops from 3T to 0.4 T within this distance. The axial magnetic field then drops further below 20 G within the next 30 cm. Therefore ion beam formation takes place in a strong magnetic field. Its influence cannot be omitted in the ion optics layout.

The maximum extraction energy out of the ECR ion source is defined by the injection energy into the cyclotron, which is presently designed for 10-15 keV. This puts difficult requirements on the beam transport section, where we have to transport several mA of heavy ions to the analyzing magnet and then up to several hundred eμA through the axial injection line of the cyclotron. Therefore, we have initiated simulations of the extraction and beam transport system in order to enhance transmission through the beam line and are also considering other center-region geometries, which could operate with higher injection voltages.

The influence of the high magnetic field on the ion beam extraction and matching to the beam line has been investigated in [5]. The extraction system has been first simulated with the 2D ion-trajectory code IGUN with an estimated mean charge state of the extracted ion beam. These results have then been compared with the 2D code AXCEL-INP, which can simulate the extraction of ions with different charge states. It could be verified that by using the right normalization of the current contribution of each charge state, as described in [5], it is possible to simulate the extraction system with a single, mean charge state. In this way, the simulation of the extraction is simplified considerably.

Figure 5 shows typical simulation results for different charge states. The charge state distribution (CSD) used in these simulations is summarized in Table 6. It can be clearly seen that different charge states focus differently in the high magnetic field of a superconducting ECR ion source. This leads to typical emittance patterns, where each charge state is oriented

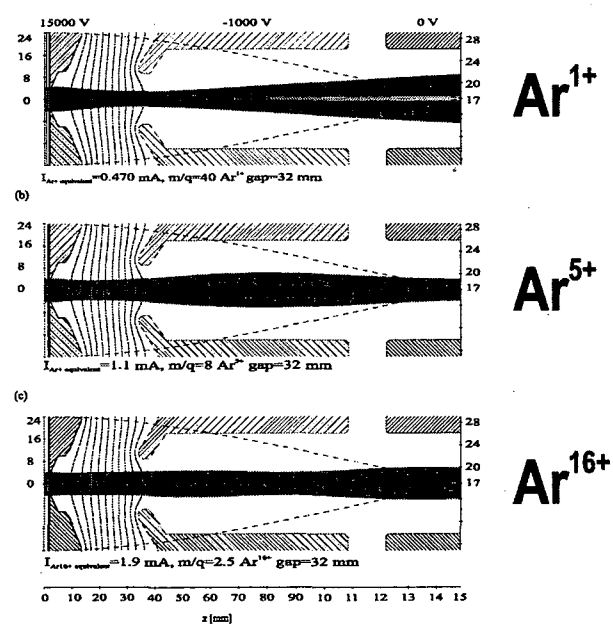

Fig. 5: *Different charge states focus differently in the high magnetic field of a superconducting ECR ion source. The dotted line represents the axial magnetic field strength.*

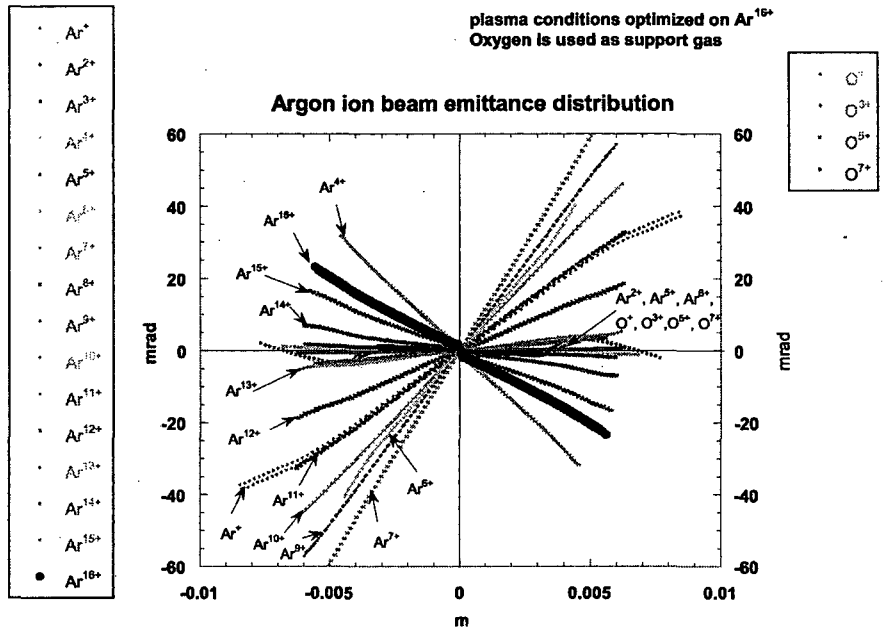

Fig. 6: *Different charge states focus differently in the high magnetic field of a superconducting ECR ion source. This leads to typical emittance patterns (at z=15 cm from the outlet aperture), where each charge state is oriented differently in the r-r' phase space.*

differently in the r-r' phase space. Such a phase space plot is shown in Fig. 6, again demonstrating how the charge states focus differently in the axial magnetic field.

Table 6: *CSD optimized for Ar^{16+} with oxygen gas mixing, extracted out of the AECR-U ion source. The CSD is corrected for transport losses (current estimates were made for the lower charge states below Ar^{5+}).*

Charge state	Ar - CSD [eμA]	O_2 - CSD [eμA]
16	17	
15	45	
14	69	
13	78	
12	85	
11	75	
10	64	
9	57	
8	50	
7	49	48
6	45	97
5	40	80
4	38	72
3	35	70
2	30	70
1	25	70
	Σ = 802 μA	Σ = 507 μA

This behavior must be considered in the design of the beam transport line. The use of a movable extraction system as well as additional focusing elements is necessary to match the beam to the spectrometer acceptance. We have developed a first beam line layout. The design consists of a Glaser lens (0.6 m downstream from the plasma outlet aperture) and a double focusing sector magnet (2.4 m downstream from the plasma outlet aperture). The first 30 cm have been calculated with IGUN for Ar^{9+} with the CSD of Table 6. The output beam parameters from IGUN at z= 30 cm have been used as input parameters for the matrix-code TRACE-2D, which allows to optimize the beam line. By combining these two computer codes, we are able to consistently simulate the beam from the plasma meniscus through the beam line. Further simulations are necessary to improve transmission at higher current levels.

5. REFERENCES

[1] C.M. Lyneis, Z.Q. Xie, C.E. Taylor: "Development of the third generation electron cyclotron resonance ion source", Rev.Sci.Instrum. **69**, 682 (1998)

[2] C.M. Lyneis, Z.Q. Xie, C.E. Taylor: "Design of the 3rd Generation ECR Ion Source", Proceedings of the 13th International Workshop on ECR Ion Sources, Texas A&M University, USA (1997), p.115

[3] K. Chow, LBNL Engineering Note, SCMAG-599

[4] C.E. Taylor, LBNL Engineering Note, SCMAG-615

[5] D. Wutte, M.A. Leitner, C.M. Lyneis, C.E. Taylor, Z.Q. Xie: "Design Study of the Extraction System of the 3rd Generation ECR Ion Source", to be published in the Proceedings of the 8th International Conference on Heavy-Ion Accelerator Technology, Chicago, USA (1998)

ERNEST ORLANDO LAWRENCE BERKELEY NATIONAL LABORATORY
ONE CYCLOTRON ROAD | BERKELEY, CALIFORNIA 94720

Prepared for the U.S. Department of Energy under Contract No. DE-AC03-76SF00098