LBNL-44385
Preprint

ERNEST ORLANDO LAWRENCE
BERKELEY NATIONAL LABORATORY

Associations Between Indoor CO_2 Concentrations and Sick Building Syndrome Symptoms in US Office Buildings: An Analysis of the 1994–1996 BASE Study Data

Michael G. Apte, William J. Fisk, and Joan M. Daisey

Environmental Energy Technologies Division

February 2000

Submitted to
Indoor Air

REFERENCE COPY
Does Not
Circulate

Bldg. 50 Library - Ref.
Lawrence Berkeley National Laboratory

Copy 1

LBNL-44385

DISCLAIMER

This document was prepared as an account of work sponsored by the United States Government. While this document is believed to contain correct information, neither the United States Government nor any agency thereof, nor the Regents of the University of California, nor any of their employees, makes any warranty, express or implied, or assumes any legal responsibility for the accuracy, completeness, or usefulness of any information, apparatus, product, or process disclosed, or represents that its use would not infringe privately owned rights. Reference herein to any specific commercial product, process, or service by its trade name, trademark, manufacturer, or otherwise, does not necessarily constitute or imply its endorsement, recommendation, or favoring by the United States Government or any agency thereof, or the Regents of the University of California. The views and opinions of authors expressed herein do not necessarily state or reflect those of the United States Government or any agency thereof or the Regents of the University of California.

LBNL-44385

Associations Between Indoor CO_2 Concentrations and Sick Building Syndrome Symptoms in US Office Buildings: An Analysis of the 1994-1996 BASE Study Data

Michael G. Apte, William J. Fisk and Joan M. Daisey

February 14, 2000

Indoor Environment Department
Environmental Energy Technologies Division
Lawrence Berkeley National Laboratory
Berkeley, CA 94720

This work was supported by the Assistant Secretary of Energy Efficiency and Renewable Energy, Office of Building Technologies, State and Community Programs, U.S. Department of Energy (DOE) under Contract DE-AC03-76SF00098.

Abstract

Higher indoor concentrations of air pollutants due, in part, to lower ventilation rates are a potential cause of sick building syndrome (SBS) symptoms in office workers. The indoor carbon dioxide (CO_2) concentration is an approximate surrogate for indoor concentrations of other occupant-generated pollutants and for ventilation rate per occupant. Using multivariate logistic regression (MLR) analyses, we evaluated the relationship between indoor CO_2 concentrations and SBS symptoms in occupants from a probability sample of 41 U.S. office buildings. Two CO_2 metrics were constructed: average workday indoor minus average outdoor CO_2 (dCO_2, range 6-418 ppm), and maximum indoor one-hour moving average CO_2 minus outdoor CO_2 concentrations (dCO_2MAX). MLR analyses quantified dCO_2/SBS symptom associations, adjusting for personal and environmental factors. A dose-response relationship ($p<0.05$) with odds ratios per 100 ppm dCO_2 ranging from 1.2 to 1.5 for sore throat, nose/sinus, tight chest, and wheezing was observed. The dCO_2MAX/SBS regression results were similar. Implications: large increases in ventilation rate or improvements in ventilation effectiveness and/or indoor pollutant source control would be expected to decrease the prevalence of selected symptoms by up to 70-85%.

Introduction

Building ventilation and indoor CO_2 concentrations

The primary indoor source of CO_2 in office buildings is the respiration of the building occupants. CO_2 concentrations in office buildings typically range from 350 to 2500 ppm (Seppänen *et al.*, 1999). At the concentrations occurring in most indoor environments, CO_2 buildup is thought to be a surrogate for other occupant-generated pollutants, particularly bioeffluents, and ventilation rate per occupant, but not a causal factor in human health responses. The Threshold Limit Value for 8-hour time-weighted-average exposures to CO_2 is 5000 ppm (ACGIH, 1991).

Outdoor air contains approximately 350 ppm of CO_2. The release of CO_2 by occupants causes indoor CO_2 concentrations to exceed outdoor concentrations by an amount that depends on the rate of outside air supply per occupant and the time elapsed since the occupants entered the building. Concentrations of other indoor-generated contaminants should be roughly correlated with the difference between the indoor CO_2 concentration and the concentration in the outdoor air supplied to the building. The correlation should be strongest for other human bioeffluents and weaker for pollutants emitted by building materials, furniture, electronic and office equipment, cleaning and other activities (Bluyssen *et al.*, 1996; Seppänen *et al.*, 1999).

The lowest minimum ventilation rate guideline set by the American Society of Heating, Refrigeration, and Air Conditioning Engineers (ASHRAE) in Standard ASHRAE 62-1989 is 8 Ls^{-1} per person (ASHRAE, 1999). Based upon mass-balance calculations, this corresponds to a maximum acceptable steady state indoor CO_2 concentration of 1000 ppm, assuming an outdoor CO_2 concentration of 350 ppm and a CO_2 generation rate per person of 0.31 $Lmin^{-1}$. For offices, the recommended minimum ventilation rate is 10 Ls^{-1} per person which, using the above assumptions, corresponds to a steady state indoor concentration of approximately 870 ppm. Because CO_2 concentrations in offices usually do not equilibrate, measured concentrations are not easily translated into ventilation rates.

Sick Building Syndrome symptoms

SBS is used to describe a set of adverse health or discomfort symptoms that individuals experience when they spend time indoors, particularly in office buildings, and that lessen while away from the building. SBS symptoms do not indicate either a particular exposure or a specific disease (Levin, 1989; Mendell, 1993). The prevalence of workers experiencing symptoms typically ranges from a few percent to 50-60 percent depending upon the symptom and the environment.

SBS symptoms are often classified by the affected region and system of the body. The classifications are: upper respiratory and mucosal symptoms, typically reported as dry, itchy, sore, burning, or otherwise irritated eyes, nose, sinus, or throat; lower respiratory irritation or distress such as cough, tight chest, wheeze, or difficulty breathing; neuro-physiological symptoms including headache, drowsiness, lethargy, tiredness, mental

fatigue, dizziness, etc.; and skin irritation symptoms such as itching or stinging, dryness, or reddening (Levin, 1989).

CO_2 and SBS studies in the literature

A thorough review of the literature regarding building ventilation and CO_2 buildup, and their association with health, comfort, and productivity was recently compiled by Seppänen *et al.*, 1999. Their review summarizes the results of 22 studies of SBS symptoms in office buildings where CO_2 measurements were made over 30,000 subjects in more than 400 buildings in North America, Europe, and Asia. A statistically significant ($p \leq 0.05$) positive association was found between CO_2 levels and one or more SBS symptom in about one-half of the studies. In these studies, indoor CO_2 concentrations were associated with headache, fatigue, eye symptoms, nasal symptoms, respiratory tract symptoms, and total symptom scores. The respiratory symptoms included throat and lower respiratory symptoms, and difficulty breathing. When considering studies of mechanically ventilated or air-conditioned buildings but not the naturally ventilated buildings, the proportion of studies showing a statistically significant positive association between CO_2 and SBS symptoms rose to 70%. These associations for CO_2 and SBS in office buildings were consistent with the observed association between building ventilation and SBS symptoms. When the studies are aggregated, there is a statistically significant higher prevalence of SBS symptoms in buildings with ventilation rates below 10 Ls^{-1} compared with buildings with ventilation rates at or above 10 Ls^{-1}. The review also indicated that several studies found that increases in ventilation rates to 20 Ls^{-1} were associated with significant decreases in SBS symptoms.

In existing studies, null or negative findings of the associations of SBS symptoms with both CO_2 and ventilation studies should not necessarily be interpreted as evidence that ventilation is not a determinant factor in predicting SBS. Other potential explanations for the absence of associations include poor statistical power, study designs and analyses that did not adequately account for confounding variables, or insufficient ability to characterize CO_2 concentrations in the buildings and the symptoms of the building occupants.

Assumptions and hypotheses

In this paper, it is assumed that adequate office building ventilation is necessary to remove pollutants generated within the building. Indoor pollutant sources include the occupants themselves, tobacco smoke, the building structure and fixed furnishings, office equipment, and materials used for cleaning and maintenance. Building occupants are the dominant source of CO_2 increases in buildings. Indoor pollutants are removed by dilution through ventilation with outdoor air. At constant occupancy, changes in indoor CO_2 concentrations are correlated with changes in the concentrations of other pollutants in the building volume.

We hypothesize that in occupied office buildings, indoor minus outdoor CO_2 concentrations (ΔCO_2) are associated with occupant SBS symptoms. This is because

ΔCO_2 is correlated with indoor pollutant exposures that cause these symptoms through chemically or physically mediated stress.

Methods

The BASE Study

The data analyzed in this paper were collected in 41 large U.S. office buildings from 1994 to 1996, a subset of 100 buildings studied from 1994-1998 by the U.S. Environmental Protection Agency (EPA) in the Building Assessment Survey and Evaluation (BASE) study (Girman *et al.*, 1995, Womble *et al.*, 1995, Womble *et al.*, 1996). These 100 buildings were selected at random to be a representative sample of the nation's office building stock, however at the time that the analyses were conducted, only the '94-'96 data were available. These 41 buildings are located in 14 states (AZ, CA, CO, FL, LA, MN, MO, NE, NV, OR, PA, SC, TN, and TX). All 41 of these buildings were at least partially mechanically ventilated and utilized air conditioning in at least a portion of the monitored workspaces.

Individual BASE buildings were studied during one-week periods of the winter or summer months. The BASE protocol (see Womble *et al.*, 1993 and USEPA BASE Website reference for more details) includes the assembly of an exhaustive database on the physical characteristics of the buildings' construction and HVAC systems and extensive indoor and outdoor environmental monitoring data from a selected space within each building. Data were also solicited via questionnaire from all study space occupants within each building, with a median response rate of 87%. The questionnaire collected information on the occupants' perceptions of their workplace environments, job characteristics, and health and well being (including symptoms associated with SBS). The environmental data were collected during the same week that the questionnaire was administered. Real-time environmental data were collected from Tuesday morning through Thursday evening while integrated samples were collected during the Wednesday workday. The questionnaire was administered during work hours on Thursday.

Description of the BASE Study Measurements

At each office building, CO_2, volatile organic compounds (VOCs), temperature, relative humidity (RH), and other potential indoor pollutants were measured at a single outdoor location, and indoors at three locations, representing locations of building occupancy, at a vertical height of 1.1 meters. Real-time infrared CO_2 analyzers collected data that were stored as 5-minute averages for each measurement location. VOC samples were collected over 9-hours in canisters and analyzed by gas chromatograph-mass spectrometry for 56 VOC species. Indoor temperature was measured at four vertical strata (0.1, 0.6, 1.1, and 1.7 meters) and was collected along with outdoor data as 5-minute averages.

We calculated workday (defined as 8:00 - 17:00, Tuesday – Thursday) spatial-average pollutant concentrations and temperatures based on data from the three measurement sites. Two CO_2 exposure metrics were calculated. One metric (dCO_2) was calcualted as:

$$dCO_2 = \overline{CO_2}_{indoor} - \overline{CO_2}_{outdoor} \quad (1)$$

where,

$\overline{CO_2}_{indoor}$ = the time-averaged indoor workday CO_2 concentration, and

$\overline{CO_2}_{outdoor}$ = the time-averaged outdoor workday CO_2 concentration.

The second metric (dCO2MAX) was calculated as:

$$dCO_2MAX = CO_{2\ 1hr\max_indoor} - \overline{CO_2}_{outdoor} \quad (2)$$

where,

$CO_{2\ 1hr\max_indoor}$ = maximum workday 1hr moving average CO_2 concentration, and

$\overline{CO_2}_{outdoor}$ = the time-averaged outdoor workday CO_2 concentration.

Indoor VOC concentrations were calculated from workday time-weighted-average (TWA) measurements across the three indoor sites. A value of one-half of the limit of detection (LOD) was used to replace values reported as below LOD for individual VOC species. Thermal exposure (°C-hours) was calculated as the integrated difference between 5-minute-average-temperature and 20°C, averaged over 3 indoor locations and 2 measurement heights (1.1 and 1.7 meters).

Associations between selected VOCs and SBS symptoms were studied previously (Apte and Daisey, 1999). In that study, one common VOC, 1,2,4 trimethylbenzene (TMB) was found to have statistically significant associations with a number of mucous membrane and lower respiratory symptoms. In particular, TMB was identified as a component of infiltrating outdoor air originating from automotive sources. TMB was selected as a covariate in the regression models presented in order to adjust for the potential affects of ambient automotive sources on the SBS symptoms. The geometric mean (geometric standard deviation) TMB concentration across the 41 buildings was 1.2 (3.0) ppb. Appendix 1 contains the TMB data by BASE building.

The indoor average-workday RH was calculated for each building. Appendix 1 also presents the average RH for each BASE building. Indoor RH varied from 10% to almost 60%. Very low RH conditions are a suspected contributing factor for MM and LResp symptoms and susceptibility to viral infections in the respiratory tract (ASHRAE, 1992; Green, 1985). In office buildings with very low RH MM and LResp symptoms may be classified as SBS when in fact the symptoms are a direct consequence of very dry air; in these conditions the symptoms would not meet the definition of SBS.

The BASE Study Health Endpoint and Demographic Questionnaire Data

The BASE questionnaire was used to confidentially collect information from the building occupants, including gender, age, smoking status, the physical environment of the occupants' individual work stations, job characteristics, the occupants' perceptions of the workplace environment, and their health and well-being. The symptom data from the questionnaire collected data on the following symptoms: irritation of eyes, nose, and throat; chest tightness, difficulty breathing, cough, or wheezing; fatigue; headache; eyestrain; and dry or itchy skin. To qualify as a SBS symptom in the analyses presented here, the occupant must have a reported symptom occurrence of at least 1-3 days per week during the month previous to the study, and that the symptom must have "got better" when he/she was away from work. Information on the BASE questionnaire and the exact health question wording is available from the USEPA BASE Website reference.

Two health endpoints used in this study are combined mucous membrane (CMM) symptoms and combined lower respiratory (CLResp) symptoms. Occupants were coded as having a CMM symptom if they reported one or more mucous membrane (MM) symptom (i.e., eye irritation; stuffy or runny nose or sinus congestion; sore throat). Likewise, they were coded as having a CLResp symptom if they reported having at least one lower respiratory (LResp) symptom (i.e., chest tightness; difficulty breathing; cough; and wheezing).

Statistical Methods

The associations between MM and LResp SBS symptoms and elevated indoor CO_2 levels were examined in a number of ways. Crude and multivariate dCO_2 and dCO_2MAX analyses were conducted using both continuous and binary CO_2 as primary independent variables. In addition, multivariate dose-response effects were investigated using both CO_2 metrics.

The multivariate logistic regression (MLR) models were constructed in order to control for potential confounders. Each MLR model contained a SBS symptom as the dependent variable and a CO_2 metric (dCO_2 or dCO_2MAX) as an independent variable. Additional covariates included in the models were age, gender, smoking status of respondent, presence of carpet in workspace, RH, and thermal exposure, and TMB. As discussed above, MM and LResp symptoms in environments with very low RH may be misclassified as SBS. In order to avoid potential biases due to low humidity, the buildings with RH less than 20% were excluded from the regression analyses.

The statistical analyses reported in this paper were conducted with SAS 6.12 software (SAS, 1989) using established biostatistical methods (Kleinbaum *et al.*,1982, Selvin, 1995). Crude prevalence odds ratios (OR), Wald Maximum Likelihood (WML) statistics, and 95% confidence intervals were calculated using the SAS Logistic procedure. The MLR analyses were conducted using stepwise selection with an entry significance level of 0.5 and a significance level of 0.15 for allowing an independent variable to stay in the model. Models were constructed using both continuous CO_2 data and using binary variables cut at the median values of the dCO_2 and dCO_2MAX

distributions (e.g., buildings with CO_2 concentration below median = 0 while CO_2 concentration at or above median = 1).

The median dCO_2 and dCO_2MAX concentrations were 140 and 350 ppm, and the ranges were 6 - 418 ppm and 120 – 716 ppm, respectively. The dCO_2 and dCO_2MAX ORs are reported in units per-100 ppm and per-250 ppm, respectively, chosen to scale with the ratio of their median values (i.e., 250/100=350/140). This selection of OR units for CO_2/SBS symptom associations provides a basis of relative comparability between the measures of association derived using dCO_2 and dCO_2MAX.

In order to assess the possible existence of a dose-response relationship between the CO_2 metrics and SBS symptoms, additional analyses were conducted where the CO_2 metrics were divided into five categories based upon their distributions across the 41 buildings. A lowest group, the occupants of buildings in the bottom 10th percentile of CO_2 metric levels was used as a reference. The occupants in buildings with top 10th percentile of CO_2 levels were set as the highest exposure group, and the rest of the population in the study was binned into three groups split between the top and bottom 10th percentiles. For the purpose of calculating the association between the SBS symptoms and CO_2 level in each bin an analysis of covariance approach was taken (Selvin, 1995): dummy variables were used to represent the four highest CO_2 bins. Stepwise MLR models were built that forced these four dummy variables into the model and then allowed additional significant covariables to be included ($p \leq 0.15$). These regressions were used to graphically assess the data for trends in the associations between SBS symptoms and dCO_2 or dCO_2MAX for the four upper CO_2-level building groups using the building group with the lowest 10th percentile concentrations as a baseline.

Another test was conducted to assess multivariate dose-response. Additional logistic regressions using a single categorical CO_2 variable with five levels representing the above-defined binned-CO_2 groupings were conducted. These levels were coded using the bin-mean dCO_2 or dCO_2MAX value for each CO_2 level. The WML statistic and associated p-value for this categorical variable was used as a measure-of-fit of the dose-response relationship for the adjusted categorical associations between CO_2 measures and SBS symptoms (SAS, 1989).

In order to assess the potential for reducing SBS symptoms through improvements in building ventilation and or indoor pollutant source reduction, a value based on the odds ratio was derived. For symptoms with low prevalence (i.e., <5%) the OR is a close approximation of relative risk, the ratio of the risk of symptoms in the exposed population to the risk in the unexposed population (Jekel, 1996). The percent risk reduction (PRD) for SBS symptoms in the exposed population can be calculated as:

$$PRD = [(OR-1)/OR] \cdot 100. \quad (3)$$

In this paper the PRD is not used for making assessments for symptoms with prevalence above 5%.

Results

The average and ranges of a few informative physical and demographic characteristics from the '94 – '96 BASE Study needed for this paper follow are shown in Table 1. Further details for many of the characteristics can be found elsewhere (Womble *et al.*, 1996). All of the buildings had at least some air-conditioned spaces. The prevalence of operable windows in the buildings was as follows: 60% had 0% operable, 25% had at least 50% operable, and 18% had 100% operable. Some smoking areas were allowed in 39% of the buildings, 3 (7%) building had no smoking restrictions, while smoking was observed in 5 (12%) of the buildings where it was prohibited.

CO_2 Concentrations and Symptom Prevalences

Figure 1 depicts the statistical distribution of the dCO_2 and dCO_2MAX variables for all 41 buildings. Appendix 1 presents dCO_2 and dCO_2MAX data by building. Median dCO_2 and dCO_2MAX concentrations were 140 and 350 ppm, and the ranges were 6 - 418 ppm and 120 – 716 ppm, respectively. In no case was the indoor average or the peak indoor CO_2 extraordinarily high, with only one building having absolute indoor CO_2 concentrations routinely above 1000 ppm. In terms of indoor CO_2 concentrations, and thus, in terms of ventilation rate per occupant these buildings were consistent with the literature (Seppänen *et al.*, 1999). Selected overall SBS symptom prevalences for '94-96 BASE buildings are shown in Table 2, with and without exclusion of buildings with RH < 20%. The prevalence of the MM and LResp SBS symptoms in each BASE Study building is presented in Appendix 1.

Logistic Regression Results

dCO_2 Analyses

Table 3 presents both crude and adjusted ORs and 95% confidence intervals (CI) using both continuous dCO_2 data, and constructed median-split binary dCO_2 variables. The results significant at the 95% confidence level are discussed here, and all regression results are shown in Table 3. The ORs for the crude associations between continuous CO_2 and Sore Throat, Nose/Sinus, and Wheeze ranged from 1.1 to 1.5 per 100 ppm increase in dCO_2. After inclusion of age, gender, smoking status of respondent, presence of carpet in workspace, and thermal exposure, RH, and TMB in the multivariate stepwise LR models, statistically significant associations were found between 100 ppm dCO_2 and Sore Throat, Nose/Sinus, Tight Chest, and Wheeze, again with ORs ranging from 1.1 to 1.5. The combined symptom, CMM, was associated with 100 ppm dCO_2 (OR=1.1). The binary dCO_2 analyses indicated statistically significant (crude and adjusted) associations with Nose/Sinus SBS symptoms (adjusted OR = 1.5), and the adjusted OR for CMM was 1.3.

Figure 2 presents the results of the analysis of the trend between dCO_2 and symptoms, after adjustment for potential confounders, with the data from buildings in the lowest CO_2 bin serving as the reference. Total sample size and WML p-value for analysis of trend for each symptom is also shown (N range from 1404 to 1508). Visually, the plots suggest possible dose-response relationships, but usually with the OR in one binned group deviating from the expected dose-response pattern. Based on the WML tests for

statistically significant trends, the following symptoms or symptom groups have a significant dose response ($p < 0.05$) relationship with dCO_2: CMM, Sore Throat ($p <$ 0,005), Irritated Nose/Sinus, Tight Chest and Wheeze.

dCO_2MAX Analyses

Table 4 presents both crude and adjusted ORs and 95% CIs using both continuous dCO_2MAX data (per 250 ppm), and constructed median-split binary dCO_2MAX variables. The unadjusted and adjusted ORs for the association between continuous dCO_2MAX and Sore Throat was 2.0 and 2.3 per 250 ppm, respectively ($p<0.005$). In addition, the CMM (OR=1.3), Nose/Sinus (OR=1.4) and Wheeze (OR=1.9) symptoms were found to be significantly associated in the adjusted, continuous models. The binary dCO_2MAX analyses indicated statistically significant adjusted associations with Sore Throat symptoms (OR = 2.0, $p<0.005$), Nose/Sinus symptoms (OR = 1.5), and Wheeze (OR = 3.0).

Although not shown, a statistically significant increasing trend in OR was measured for all MM symptoms in the DCO_2MAX analyses. Although the data were noisier between bins than for the dCO_2 analyses, the within bin confidence intervals were tighter. LResp symptoms for dCO_2MAX showed no statistically significant dose-response, however marginally significant trends were evident for Tight Chest ($p = 0.13$) and Wheeze ($p =$ 0.06).

Covariables in Adjusted Models

Many of the variables used to control for confounding in the multivariate regression models were statistically significant. Most associations were significant at the 95% confidence level, however in some instances the covariables were only significant with $p<0.15$. The choice of dCO_2 or dCO_2MAX did not substantially change the associations between the covariables and SBS symptoms. For the continuous models the associations between covariables and the MM and LResp symptoms are summarized as follows. Age: OR = 1.2 to 1.3 per 10 years above 20 years of age (Cough and Wheeze only). Gender: OR = 1.5 to 6.4 (female relative to male, all MM and LResp symptoms except Sore Throat and Wheeze). Thermal Exposure: OR = 0.6 to 0.8 (per 10°C-hr above 20°C, for Nose/Sinus, Difficulty Breathing, Tight Chest). Smoking Status: OR = 1.4 and 1.7 for Difficulty Breathing and Wheezing, respectively (Smoker relative to Non-Smoker). Carpet in workspace: OR = 2.0 for Sore Throat. RH: OR = 0.6 and 0.8 per 10% RH for Difficulty Breathing and Cough, respectively. TMB: OR = 1.1 per ppb increase of TMB (all MM and LResp symptoms except Sore Throat, Tight Chest, and Wheeze).

Associations at Maximum Observed CO_2 Levels

Table 5 presents adjusted odds ratios for SBS symptoms at the maximum dCO_2 and dCO_2MAX values observed in the 41 BASE buildings. These ORs are based on the same continuous analyses shown in Tables 3 and 4. This recasting of the analyses puts the SBS symptom risks into clear perspective. The implication is that office buildings with average absolute indoor CO_2 concentrations of roughly 800 ppm (or absolute 1-hr

maximum concentrations of about 1000 ppm) may have about 1.5 to 6.2 times the prevalence of MM and LResp symptoms as compared to buildings with about 400 ppm CO_2.

The PRD estimates from the maximum dCO_2 analyses of (low prevalence symptoms) Tight Chest and Wheeze are 80% and 85%, respectively. PRD cannot be used to directly calculate prevalence reduction in the MM symptoms (prevalence is greater than 5%), but a conservative estimate for reduction of sore throat SBS symptoms through mitigation is about 70%.

Discussion

Symptom Prevalence

The SBS prevalences observed in the BASE Study buildings (Table 2), are comparable to those observed in other studies, an important issue when considering the relevance the findings of this study. For example, the combined prevalences for MM and LResp symptoms in 12 office buildings (N = 880) of the California Healthy Building Study were 40.3% and 7.5%, respectively (Fisk *et al.*, 1993). Mendell and Smith (1990) reanalyzed symptom prevalences reported in six epidimiologic studies. Sample size weighted prevalences for nose, eye, and throat symptoms from three studies with non-humidified air-conditioned buildings were 27%, 25%, and 40%, respectively (Total N = 1524). Sample size weighted "tight chest" and "difficulty breathing" symptom prevalences from two of these buildings were about 10%. Bluyssen *et al.* (1996) present symptoms from 56 European office buildings (N = 6537) representing nine countries. Mean prevalences of dry eyes, stuffy nose, runny nose, and irritated throat symptoms, evaluated at the time of questioning, were 26%, 31%, 11%, and 29%, respectively. The mean chest tightness prevalence was 10%. When symptoms were reported retrospectively for the "last month," prevalences were somewhat higher.

Potential for Reduction of Risk

The results of these analyses indicate a clear association between elevated indoor CO_2 levels and certain MM and LResp SBS symptoms. Analyses were conducted using average and maximum indoor CO_2, and the findings were similar in each case. The findings were generally evident in the crude regression models, and were strengthened through adjustment for a number of potential confounders. Although the models using binary CO_2 variables were less statistically powerful they also showed similar associations. The strongest responses were identified for sore throat and wheezing symptoms.

Both the adjusted dCO_2 and dCO_2MAX ORs indicated increase risk of MM and LResp symptoms. Although the dCO_2 and dCO_2MAX variables are not exactly equivalent in unit values, it appears that the dCO_2MAX associations with symptoms are slightly stronger. It is unknown whether this is a real difference or merely an artifact, however, one potential explanation is that the dCO_2MAX metric tracks the peak indoor

concentrations of other pollutants and SBS responses may be due to episodic peak concentrations. Further, the larger variance (greater CIs) seen in the dCO_2MAX analysis results may be due to the dCO_2MAX data being based less on underlying data than the dCO_2 (e.g., peak 1-hour average vs. 3 workday average).

The odds ratios for the associations of symptoms with the maximum observed difference between indoor and outdoor CO_2 concentrations may indicate the maximum potential to reduce selected SBS symptoms through large increases in ventilation rates. The maximum values of dCO_2 and dCO_2MAX are 418 and 716 ppm, respectively. Table 5 provides these ORs. Considering only the significant associations, ORs range from 1.7 to 6.2 (with an extreme of 10.2 for dCO_2MAX/sore throat). Based upon the PRD calculations from the maximum observed dCO_2, the maximum potential reductions in symptom prevalences are roughly 70% to 85%.

Epidemiological interpretation

Bias and Confounding

It is possible that the apparent associations are due to some type of bias. Major sources of bias due to confounding have been accounted for, with gender being the most consistent and strongest confounder. Certainly other undetermined sources of confounding may be at work. *Selection bias* due to the study design is possible. However the buildings were selected from a probability sample, and the design is cross-sectional. There is no reason to suspect that the BASE Study design differentially favors exposed SBS cases, or non-exposed non-SBS cases, as would be necessary for this type of bias. The cross-sectional design, although not very sensitive, should be less subject to selection bias.

The analyses discussed in this study controlled for many of the sources of confounding to be expected in the relationship between environmental stresses and SBS in office buildings. However, residual confounding may remain unaccounted for. Potential residual confounding by factors associated with both CO_2 (as a surrogate for building occupancy and per-person ventilation) and symptoms may include physical characteristics of the buildings such as building age, sealed windows, the type of ventilation system, the type of carpet present, and the type of activities occurring in the buildings. The level of building maintenance and cleaning of buildings has not been accounted for. Personal characteristics not controlled for include atopy, and history of and treatment for asthma, but these are not likely to be associated with CO_2 concentrations. Work-related factors such as satisfaction with the environment, job stress, and job satisfaction may also be unaccounted contributors to confounding. The BASE Study dataset contains many more variables than were used in these analyses, including work-related factors, atopy, and asthma.

Information bias due to error in classification of SBS cases from non-cases is possible. It is reasonable to think that the BASE questionnaire might encourage individuals who are dissatisfied with their environment to report symptoms more strongly than they are

actually experienced. To fully resolve this question is difficult, however the questionnaire has been refined over several generations of studies. The BASE protocol and quality assurance requirements ensure that the physical measurements are accurate and sufficiently precise. It may also be possible to assess information bias by using other health endpoint data (i.e., "numbness in hands or wrists") collected in the BASE Study that are not considered to be caused by air pollutants.

Dose Response

The analyses of trend explored in this study indicate statistically significant evidence of dose-response relationships between indoor CO_2 levels and MM and LResp symptoms. Dose-response is particularly evident for the dCO_2 analyses, but also for the MM symptoms in the dCO_2MAX analyses. Not surprisingly, since the data were divided into five subcategories to conduct these analyses, the confidence intervals for the individual bin OR estimates are quite large.

The dose-response analyses reflect the assumptions of linearity in the regression models. This assumption is not necessarily correct, and fits to nonlinear response functions might provide further information on the dose dependence of the SBS symptoms. This was not explored in these analyses, in part because the limited sample size of the binned data has limited power for meaningful comparisons of different response functions. Larger datasets are needed to further interpret the nature of these relationships.

Consistency of Findings

A body of evidence suggests that these findings are consistent with those of other research. However, few studies have reported the odds ratios or relative risks for these observations. Seppänen *et al.* (1999) cite only three studies where risk ratios were presented for the association between indoor CO_2 levels and health outcome. Two of these studies do not report SBS symptoms (pneumonia and perceived indoor environmental quality). In the third study, Sieber *et al.* (1998) discuss finding statistically significant associations between elevated mean afternoon CO_2 (buildings with > 1000 ppm vs. ≤ 800 ppm) and symptoms of the lower respiratory tract (on the day of questioning) after adjusting for confounding effects from gender, age, and smoking status. Their calculated ORs (95% confidence interval) were 2.0 (1.3–3.0) for tight chest, 1.8 (1.1-3.0) for shortness of breath, and 2.4 (1.3-4.4) for both symptoms concurrently. Although a direct comparison between the analyses of Sieber *et al.* and those presented in this paper is not possible, the strength of associations in the two studies are comparable. Although tight chest symptoms were only (marginally) significant in one analysis (Table 3) and a significant association with short breath was never seen, a significant association with wheezing, also an LResp symptom was evident in all of the analyses.

Four studies were reported in the review by Seppänen *et al.* (1999) where MM and LResp symptoms prevalence was observed to increase in relation to indoor CO_2 concentrations, but the relationship was not quantified with a measure of risk. MM irritation including dry and/or hoarse throat; stuffy nose; and itching, burning or otherwise irritated eyes were observed in three of the studies (Groes *et al.*, 1995, Hill *et al.*, 1992, and Sohn *et al.*). Finally, Bright *et al.* (1992) included *difficulty breathing* as a component in a satisfaction

metric (other components were fatigue, drowsiness, and lack of concentration) found to be correlated with indoor CO_2, however the relative influence of the difficulty breathing symptom in the composite metric was not reported.

Biological Considerations

Due to the nature of these analyses, where CO_2 is an indicator of other undetermined environmental stressors, direct explanations of biological action are not possible. However, numerous potential sources of airborne contaminants are known to be present in office buildings. As discussed above, these sources include human bioeffluents, and pollutants emitted by building materials, furniture, electronic and office equipment, cleaning and other activities, etc.

A detailed analysis of the plausibility for all SBS-causing agents of indoor origin will not be discussed here. For exemplary purposes the plausibility of the effects of per-person ventilation-rate-moderated VOC exposures on SBS is explored. Sources of indoor VOCs have been associated with statistically significant increases in the risk of MM and Lresp symptoms in office buildings (Ten Brinke *et al.*, 1998, Apte and Daisey, 1999). Individual VOC species identified in office buildings are known to have irritating effects upon human mucosal tissues and the respiratory tract (Ten Brinke *et al.*, 1998). Mass balance dictates that increases in building ventilation will lead to lower steady-state indoor concentrations of VOCs emitted from indoor sources. Thus, the hypothesis that the observed relationship between per-person ventilation rates (as traced by dCO_2 and dCO_2MAX) and MM and LResp symptoms is biologically credible.

Conclusions

After adjusting for confounding variables, we found significant associations of mucous membrane and lower respiratory SBS symptoms with increases of dCO_2 and dCO_2MAX when workday average CO_2 levels were always below 800 ppm.

ORs for significant associations of symptoms with 100 ppm increases in dCO_2 were 1.1 to 1.5. ORs for significant associations of symptoms with 250 ppm increases in dCO_2MAX were 1.3 to 2.3.

Statistically significant dose-response relationships were found between dCO_2 and the following symptoms: sore throat, irritated nose/sinus, combined mucous membrane symptoms, tight chest, and wheeze.

Implications: These results suggest that increases in the ventilation rates among typical office buildings will, on average, significantly reduce prevalences of several SBS symptoms, even when these buildings meet the existing ASHRAE ventilation standards for office buildings. The magnitude of the reduction will depend on the magnitude of the increase in ventilation rates. Very large increases in ventilation rates, sufficient to reduce indoor CO_2 concentrations to approximately outdoor levels, would be expected to decrease prevalences of selected symptoms by 70% to 85%. It is understood that there is

no direct causal link between exposure to CO_2 and SBS symptoms, but rather CO_2 is approximately correlated with other indoor pollutants that may cause symptoms.

References

ACGIH (1991) Documentation of the Threshold Limit Values and Biological Exposure Indices, Sixth Edition, American Conference of Governmental Industrial Hygienists, Inc., Cincinnati, OH.

Apte, M.G., and Daisey, J. M. (1999) "VOCs and "Sick Building Syndrome": Application of a New Statistical Approach for SBS Research to U.S. EPA BASE Study Data," in *Proceedings of Indoor Air 99*, The 8th International Conference on Indoor Air Quality and Climate, August 8-13, 1999, Edinburgh, Scotland, **1**: 117-122.

ASHRAE (1992) ASHRAE Standard 55-1992, "Thermal Environmental Conditions for Human Occupancy," American Society of Heating, Refrigerating, and Air Conditioning Engineers, Atlanta.

ASHRAE (1999) ASHRAE Standard 62-1999, "Ventilation for acceptable indoor air quality," American Society of Heating, Refrigerating, and Air Conditioning Engineers, Atlanta.

Bluyssen P.M., de Oliviera Fernandes, E., Groes, L., Clausen, G., Fanger, P.O., Valbjørn, O., Bernhard, C.A., and Roulet, C.A. (1996) "European indoor air quality audit project in 56 office buildings," *Indoor Air*, **6**:221-238.

Brightman, H.S., Womble, S.E., Ronca, E.L., Girman, J.R., (1996) "'95 Baseline Information on Indoor Air Quality in Large Buildings (BASE '95)," *Proceedings of Indoor Air '96*, The 7th International Conference on Indoor Air Quality and Climate, **3**:1033-1038.

Bright, D.P., Mader, M.J., Carpenter, D.R., and Hermon-Cruz, I.Z. (1992) "Guide for indoor air quality surveys," Armstrong Laboratory, AL-TR-1992-0016, Brooks Air Force Base, TX.

Brightman, H.S, Wallace, L.A., Sieber, W.K., McCarthy, J.F., and Spengler, J.D. (1999) "Comparing symptoms in United States Office Buildings," in *Proceedings of Indoor Air 99*, The 8th International Conference on Indoor Air Quality and Climate, August 8-13, 1999, Edinburgh, Scotland, **1**:847-852.

Fisk, W.J., Mendell, M.J., Daisey, J.M., Faulkner, D., Hodgson, A.T., Nematollahi, M., and Macher, J.M. (1993) "Phase 1 of the California Healthy Building Study: a Summary," *Indoor Air* **3**:246-254.

Girman, J.R., Womble, S.E., Ronca, E.L., (1995) "Developing Baseline Information on Buildings and Indoor Air Quality (BASE '94): Part II - Environmental Pollutant

Measurements and Occupant Perceptions," *Proceedings of Healthy Buildings '95*, Milan, Italy, **3**:1311-1316.

Green, G.H. (1985) "Indoor Relative Humidities in Winter and the Related Absenteeism," *ASHRAE Transactions*, 91(1):643-653.

Groes, L., Raw, G., and Bluyssen, P. (1995) "Symptoms and environmental perceptions for occupants in European office buildings," *Proceedings of the 4th International Conference on Healthy Buildings,* 1293-1298.

Hill, B.A., Craft, B.F., and Burkart, J.A. (1992) "Carbon dioxide, particulates, and subjective human responses in office buildings without histories of indoor air quality problems," *Applied Occupational Environmental Hygiene*, **72**(2):101-111.

Kleinbaum, D.G., Kupper, L.L., and Morgenstern, H. 1982. *Epidemiologic research : principles and quantitative methods*. Belmont, CA: Lifetime Learning Publications.

Levin, H. (1989) "Sick Building Syndrome: Review and exploration of causation hypotheses and control methods," in *IAQ89 The Human Equation: Health and Comfort*, Proceedings of the ASHRAE/SOEH Conference IAQ89, April 17-20, 1989, San Diego, CA, American Society of Heating, Refrigerating, and Air Conditioning Engineers, Atlanta, pp 263-274.

Mendell M.J. (1993) Non-specific symptoms in office workers: a review and summary of the epidemiologic literature. *Indoor Air*, **3**:227-36

Mendell, M.J. and Smith, A.H. (1990) "Consistent pattern of elevated symptoms in air-conditioned office buildings: A reanalysis of epidemiologic studies," *Am J Public Health*, **80**:1193-1199.

SAS (1989) *SAS/STAT user's guide, Version 6*, 4th ed., SAS Institute, Cary NC.

Selvin, S. (1995) *Practical Biostatistical Methods*, Duxbury Press, Belmont CA.

Seppänen, O.A., Fisk, W.J., and Mendell, M.J. (1999) "Association of ventilation rates and CO_2 concentrations with health and other responses in commercial and institutional buildings," *Indoor Air* Vol 9, pp 226-252.

Sieber, W., Wallingford, K. and Allen, J. (1998) "Carbon dioxide levels in the indoor office environment," *Proceedings of the Section of Statistics and the Environment*, American Statistical Association. Also in Naco, G., Mendell, M.J, Sieber, W.K. "Work-related respiratory symptoms in office buildings: analyses of standardized data from NIOSH Health Hazard Evaluations (Manuscript in preparation).

Sohn, J-Y., Park, J-S., Park, B-Y., Yoon, D-W., and Minamino, O. (1994) "Experimental research on the indoor air quality and sick building syndrome in office buildings," *Proceedings of Healthy Buildings 94*, 397-406.

Ten Brinke, J., Selvin, S, Hodgson, A. T., Fisk, et al. 1998. Development of new VOC exposure metrics and their relationship to "Sick Building Syndrome" symptoms, *Indoor Air,* Vol. 8.

USEPA BASE Website, "Sources of information on indoor air quality: IAQ in large office buildings", http://www.epa.gov/iaq/base/index.html.

Womble, S.E., Axelrad, R., Girman, J.R., Thompson, R., and Highsmith, V.R. (1993) "EPA BASE Program - Collecting Baseline Information on Indoor Air Quality," *Proceedings of Indoor Air '93*, **1**:821-825.

Womble, S.E., Girman, J.R., Ronca, E.L., Axelrad, R., Brightman, H.S., and McCarthy J.F. (1995) "Developing Baseline Information on Buildings and Indoor Air Quality (BASE '94): Part I - Study Design, Building Selection, and Building Descriptions, Proceedings of Healthy Buildings '95, Milan, Italy, 3:1305-1310.

Womble, S.E., Ronca, E.L., Girman, J.R., and Brightman, H.S. (1996) "Developing Baseline Information on Buildings and Indoor Air Quality (Base '95)," In *IAQ 96/Paths to Better Building Environments/Health Symptoms in Building Occupants*, American Society of Heating Refrigeration and Air-conditioning Engineers, Atlanta.

Acknowledgements

We would like to thank Susan Womble, Laureen Burton, John Girman, and the US Environmental Protection Agency Office of Radiation and Indoor Air for making the data used in this study available. Thanks also goes Olli Seppänen for his suggestions and to David Faulkner, Michael Sohn, Feng Tsai, John Girman, and David Mudarri for their reviews of the manuscript. This work was supported by the Assistant Secretary of Energy Efficiency and Renewable Energy, Office of Building Technologies, State and Community Programs, U.S. Department of Energy (DOE) under Contract DE-AC03-76SF00098.

Tables

Table 1. Informative physical and demographic characteristics from the BASE Study years 1994-1996.

Survey Parameter	Mean	Range
Occupied floor area of buildings (m^2)	17,000	1,700-64,000
Typical building occupancy (persons)	1140	90-7130
Average cooling degree days (°C-days)	830	20-2200
Average heating degree days (°C-days)	2200	100-4600
Gender of survey responders (% male)	30	6-70
Survey age group mode (years)	40-50	40-50
Participants in survey (N, total = 1958)	50	23-123
RH (%)	35	10-56
Thermal exposure (°C-hours above 20°C)	31	7-49
Overall prevalence of ever smokers (%)	43	
Overall prevalence of carpeted workspaces (%)	10	

Table 2. Sick Building Syndrome (SBS) symptoms and prevalences from survey in 41 BASE '94-96 buildings. Prevalences are shown with and without exclusion of buildings with very low relative humidity (RH).

SBS Symptoms[a]	All buildings	RH ≥20%	RH<20%
Mucous Membrane Symptoms (Combined)	27.3	27.1	28.1
dry, itching, or irritated eyes	19.9	19.9	19.9
sore or dry throat	7.1	6.9	7.6
stuffy or runny nose, sinus congestion	13.7	13.1	16.1
Chest Tightness or Difficulty Breathing	8.8	9.0	8.0
chest tightness	2.4	2.5	2.0
shortness of breath	2.1	2.3	1.4
Cough	5.5	5.6	5.2
Wheezing	2.4	2.5	1.7
Fatigue or Sleepiness			
unusual tiredness, fatigue, or drowsiness	16.2	15.7	18.8
Headache	16.7	16.7	16.5
Tired or strained eyes	23.1	23.1	22.9
Dry or itchy skin	5.2	4.7	7.1

[a]Symptoms occurred at least 1-3 days-per-week for the last month, and "got better" when time was spent away from work.

Table 3. Calculated crude and adjusted prevalence odds ratios indicating associations between average indoor – average outdoor workday CO_2 (dCO_2) levels and selected mucous membrane and lower respiratory sick building syndrome symptoms. The data for these analyses were collected in the '94-'96 BASE study.

SBS	Odds Ratios[a]: Indoor –Outdoor Daily Average CO_2 Concentration			
	Continuous (per 100 ppm)		Binary[b]	
	Crude	Adjusted	Crude	Adjusted
MM Combined	**1.1 (1.0-1.3)**	**1.1 (1.0-1.3)**	1.1 (0.9-1.5)	**1.3 (1.0-1.7)**
Dry eyes	1.1 (0.9-1.2)	1.1 (1.0-1.2)	1.1 (0.8-1.4)	1.2 (0.9-1.5)
Sore Throat.	**1.5 (1.2-1.9)***	**1.5 (1.2-1.9)***	1.4 (0.9-2.3)	1.4 (0.9-2.2)
Nose/sinus	**1.1 (1.0-1.3)**	**1.2 (1.0-1.4)**	1.2 (0.8-1.6)	**1.5 (1.0-2.1)**
Chest/breath.	1.1 (0.9-1.6)	1.1 (0.9-1.3)	0.8 (0.6-1.2)	0.8 (0.6-1.2)
Chest tight.	1.2 (0.9-1.7)	**1.5 (1.1-2.2)**	0.6 (0.3-1.2)	2.1 (0.4-1.9)
Short breath	0.9 (0.6-1.3)	1.3 (0.9-2.1)	0.7 (0.3-1.3)	0.9 (0.4-2.0)
Cough	1.0 (0.7-1.2)	1.1 (0.8-1.2)	0.8 (0.5-1.3)	0.8 (0.5-1.3)
Wheeze	**1.4 (1.0-2.0)**	**1.4 (1.0-2.0)**	1.7 (0.8-3.8)	1.7 (0.8-3.8)

[a]All associations in bold are statistically significant at the 95% confidence level or higher. Values in parentheses are the 95% confidence interval.

[b]Cutpoint at median = 140 ppm *$p \leq 0.005$

Table 4. Calculated crude and adjusted prevalence odds ratios indicating associations between maximum 1-hr average indoor – average outdoor workday CO_2 (dCO_2 MAX) levels and selected mucous membrane and lower respiratory sick building syndrome symptoms. The data for these analyses were collected in the '94-'96 BASE study.

SBS	Odds Ratios[a]: Maximum 1-hr Average Indoor – Daily Outdoor			
	Continuous (per 250 ppm)		Binary[b]	
	Crude	Adjusted	Crude	Adjusted
MM Combined	1.2 (1.0-1.4)	**1.3 (1.0-1.5)**	1.0 (0.8-1.3)	1.2 (0.9-1.5)
Dry eyes	1.1 (0.9-1.4)	1.2 (1.0-1.5)	1.0 (0.8-1.3)	1.1 (0.8-1.5)
Sore Throat.	**2.0 (1.4-2.8)***	**2.3 (1.6-3.2)***	**2.0 (1.2-3.2)***	**2.0 (1.2-3.3)***
Nose/sinus	1.2 (1.0-1.5)	**1.4 (1.1-1.8)**	1.2 (0.8-1.6)	**1.5 (1.1-2.3)**
Chest/breath.	1.1 (0.8-1.4)	1.1 (0.9-1.5)	1.2 (0.8-1.7)	1.3 (0.9-2.0)
Chest tight.	1.3 (0.8-2.2)	1.6 (1.0-2.8)	1.1 (0.5-2.2)	1.8 (0.9-5.2)
Short breath	0.9 (0.5-1.4)	1.6 (0.8-3.0)	0.7 (0.4-1.4)	1.2 (0.5-2.9)
Cough	1.0 (0.7-1.4)	1.2 (0.8-1.7)	1.1 (0.7-1.7)	1.2 (0.7-2.1)
Wheeze	1.6 (0.9-2.7)	**1.9 (1.1-3.4)**	2.2 (1.0-5.1)	**3.0 (1.2-7.9)**

[a]All associations in bold are statistically significant at the 95% confidence level or higher. Values in parentheses are the 95% confidence interval.

[b]Cutpoint at median = 350 ppm *$p \leq 0.005$

Table 5. Adjusted prevalence odds ratios and 95% confidence intervals for the risk of mucous membrane and lower respiratory SBS symptoms at the maximum dCO_2 (418 ppm) and dCO_2MAX (716 ppm) in the 41 1994-1996 BASE Study Buildings.

SBS Symptom	Adjusted Odds Ratios[a]	
	dCO_2	dCO_2MAX
MM Combined	**1.7 (1.1-2,7)**	**1.9 (1.1-3.2)**
Dry eyes	1.5 (0.9-2.5)	1.7 (1.0-3.1)
Sore Throat.	**6.2 (2.5-15)***	**10.2 (3.6-29)***
Nose/sinus	**2.1 (1.1-4.1)**	**2.7 (1.4-5.6)**
Chest/breath.	1.4 (0.7-2.7)	1.5 (0.6-3.5)
Chest tight.	**4.9 (1.2-21)**	4.2 (0.9-19)
Short breath	1.3 (0.3-6.5)	1.4 (0.2-8.3)
Cough	1.0 (0.4-2.7)	1.2 (0.4-3.6)
Wheeze	**4.5 (1.1-18)**	**6.3 (1.2-34)**

[a]All associations in bold are statistically significant at the 95% confidence level or higher. Values in parentheses are the 95% confidence interval.

*$p \leq 0.005$

Figures

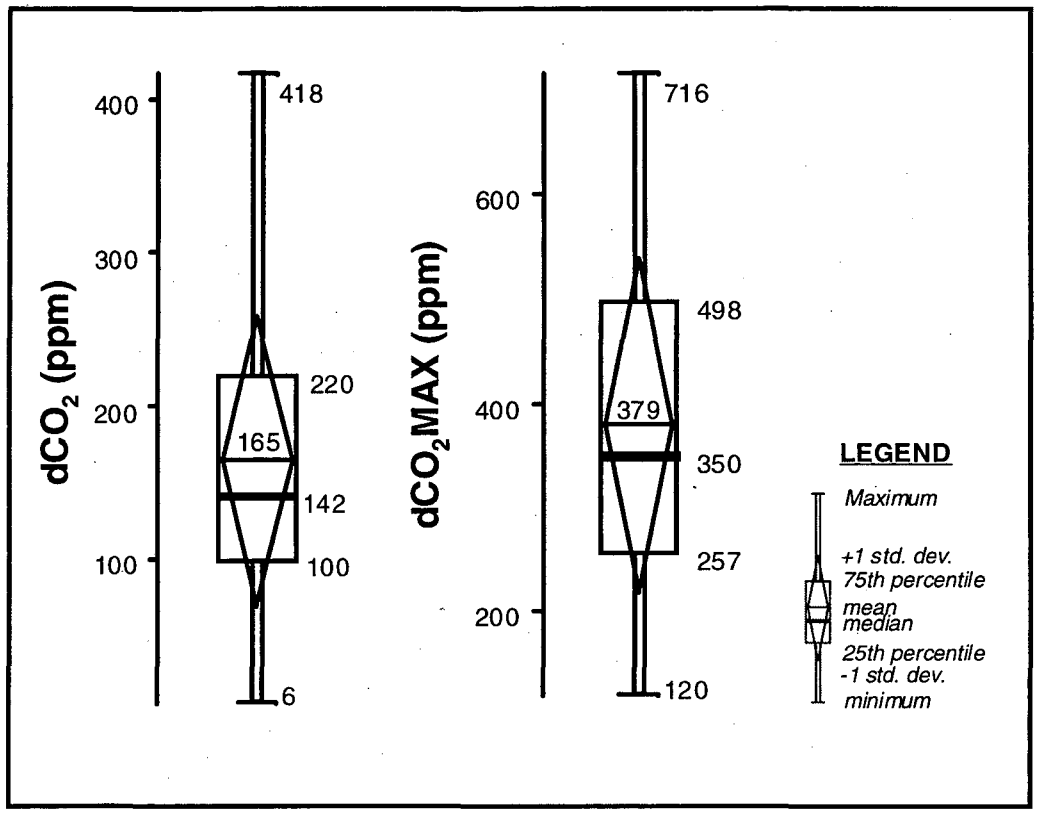

Figure 1. Statistical distributions of average workday indoor minus outdoor CO_2 concentrations (dCO_2) and peak one-hour minus average outdoor workday CO_2 concentrations (dCO_2MAX) in 41 1994-1996 BASE Study office buildings.

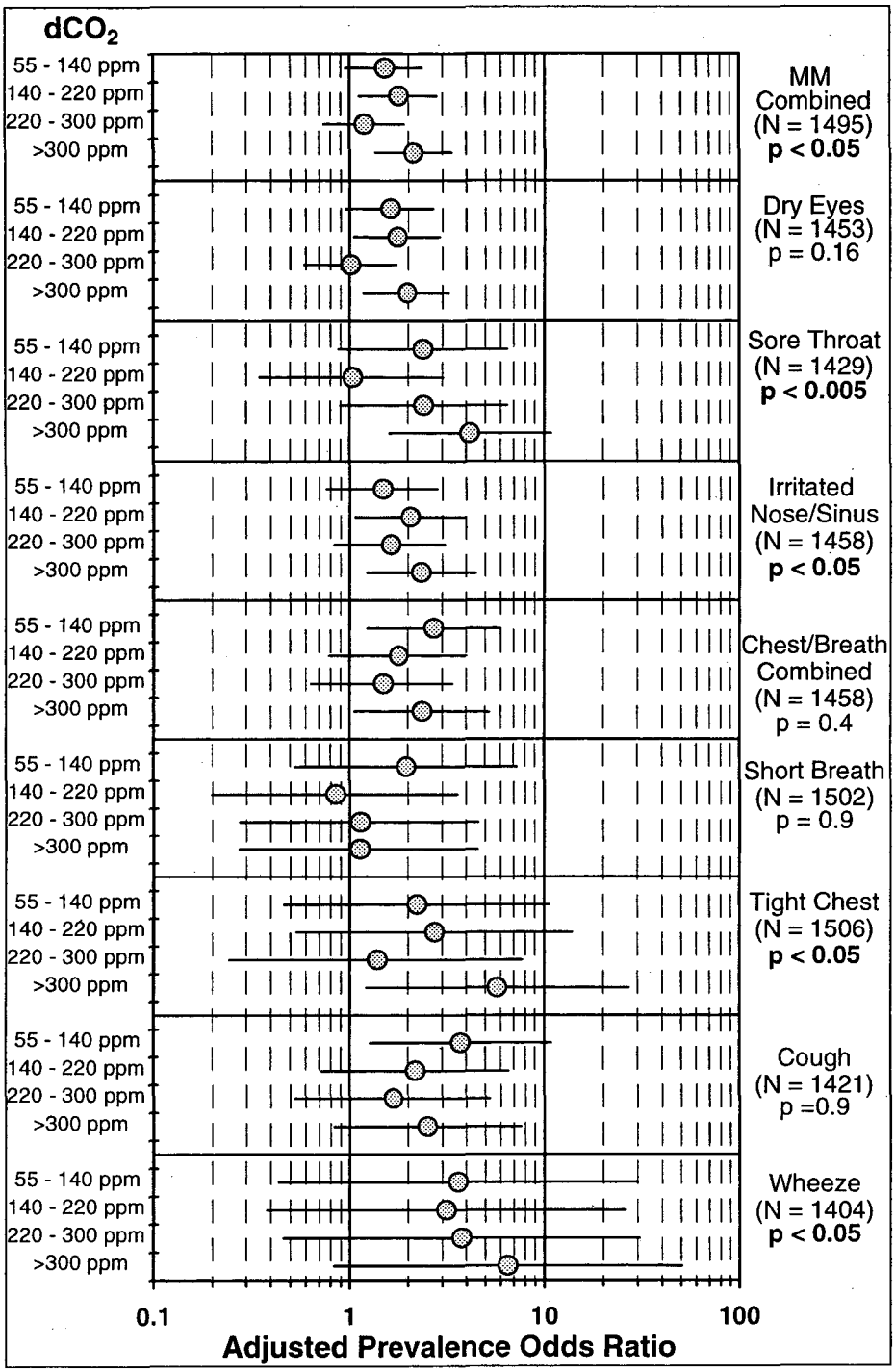

Figure 2. Adjusted analyses of trend for the relationship between workday average indoor minus outdoor CO_2 concentrations (dCO_2) and combined and individual mucous membrane and lower respiratory SBS symptoms in the 1994-1996 BASE Study office buildings with relative humidity ≥ 20%. Odds ratios and 95% confidence intervals, sample size (N) and WML test statistical significance of the dose-response trend are shown. The models included covariates to control for age, gender, smoking status, carpet, thermal exposure, RH, and VOC exposure.

Appendix

Appendix 1. Building-Related (BR) Symptom Prevalence, indoor minus outdoor average CO_2 concentration, maximum one-hour minus average outdoor CO_2 concentration, average relative humidity, and 1,2,4 trimethylbenzene (TMB) in the 41 1994-1996 BASE Study buildings.

	Percent Symptom Prevalence									Environ-mental			
BASE Study Site	BRMMBR	BRDREY	BRSRTHRT	BRSINUS	BRCHBRTH	BRBRTH	BRCHST	BRCOUGH	BRWHEEZ	dCO_2 (PPM)	dCO_2MAX (PPM)	RH (%)	1,2,4 TMB (ppb)
AZHS0295	17	11	0	6	14	6	3	3	3	100	270	22	0.2
AZHS0495	49	22	14	14	11	0	6	0	6	418	715	32	0.5
CAES1796	70	26	19	27	11	4	0	4	4	222	681	37	0.8
CAEW0795	16	3	3	9	3	0	0	3	0	88	233	23	0.3
CAEW0995	70	39	14	21	30	8	10	12	2	132	304	40	0.3
CAJS0194	4	0	5	0	5	0	5	0	0	28	180	52	0.6
CAJS0294	54	28	9	20	26	6	2	15	5	73	120	43	9.8
CAJS0394	24	16	0	8	2	0	2	0	0	55	150	49	3.4
COAS0296	20	13	0	8	2	0	0	2	0	152	323	31	0.6
COAS0496	30	20	3	8	8	0	3	5	0	150	327	39	0.9
COAS0696	28	13	11	6	17	3	0	9	6	264	502	36	2.2
FLGS0195	36	22	2	13	5	0	0	2	3	161	364	47	1.3
FLGS0495	38	19	13	9	17	5	7	5	2	344	717	49	0.4
LAGW0495	14	7	2	6	3	0	0	2	2	298	515	44	2.7
LAGW0595	62	31	2	31	25	6	0	12	8	194	471	26	1.3
LAGW0695	12	6	0	6	10	2	2	4	2	260	488	34	1.1
MNBW0194	10	7	0	3	0	0	0	0	0	216	436	15	0.1
MNBW0294	18	14	3	3	3	0	0	3	0	83	257	18	0.2
MNBW0494	21	9	6	6	12	3	3	6	0	101	327	10	0.1
MOCS0194	37	12	9	17	12	2	0	7	2	135	419	39	1.3
MOCS0594	35	17	5	14	21	2	12	5	2	137	395	45	0.6

	Percent Symptom Prevalence									Environ-mental			
BASE Study Site	BRMMBR	BRDREY	BRSRTHRT	BRSINUS	BRCHBRTH	BRBRTH	BRCHST	BRCOUGH	BRWHEEZ	dCO_2 (PPM)	dCO_2MAX (PPM)	RH (%)	1,2,4 TMB (ppb)
NECW0196	62	27	10	27	12	0	0	11	1	141	332	19	0.1
NECW0296	38	18	10	11	11	5	0	5	2	51	161	20	0.6
NECW0396	36	18	10	9	3	0	2	2	0	100	257	10	0.5
NVHW0195	37	18	3	16	3	0	0	3	0	98	223	16	0.4
NVHW0295	35	22	8	6	14	0	2	10	2	107	350	29	0.4
NVHW0395	81	32	19	33	24	5	3	13	5	82	180	19	0.4
ORIS0294	17	10	0	7	3	0	0	3	0	102	315	40	0.8
ORIS0394	57	39	5	13	22	0	4	14	5	77	184	44	1.0
ORIS0494	31	19	0	13	9	4	2	4	0	6	180	47	0.9
PABS0395	43	23	10	13	13	4	2	4	4	228	433	46	1.9
PABS0495	88	42	19	30	25	4	4	13	6	327	594	47	2.0
SCDW0195	37	15	10	14	10	2	0	7	2	218	510	36	0.3
SCDW0295	26	17	4	4	0	0	0	0	0	148	485	25	0.4
TNDS0596	36	26	6	6	6	0	3	3	0	151	498	48	0.6
TNDS0696	23	7	7	11	11	2	2	2	4	220	398	45	0.7
TNDS0796	59	31	8	21	8	3	0	3	3	142	297	49	4.7
TXFS0194	30	16	8	8	13	2	6	4	2	330	604	43	2.2
TXFS0294	25	12	3	10	3	0	2	2	0	298	570	56	0.9
TXFW0596	44	20	5	20	21	5	10	0	7	106	277	17	0.5
TXFW0696	26	21	3	3	9	0	0	9	0	207	515	31	0.4

BR symptom names: BRMMBR = combined mucous membrane; BRDREY = dry, itiching, or irritated eyes; BRSRTHRT = sore or dry throat; BRSINUS = stuffy or runny nose, sinus congestion; BRCHBRTH = combined lower respiratory; BRBRTH = Shortness of breath; BRCHST = Tight Chest; BRCOUGH = Cough; BRWHEEZ= Wheeze. Symptoms occurred at least 1-3 days per week for the last month, and "got better" when time was spent away from work.

ERNEST ORLANDO LAWRENCE BERKELEY NATIONAL LABORATORY
ONE CYCLOTRON ROAD | BERKELEY, CALIFORNIA 94720

Prepared for the U.S. Department of Energy under Contract No. DE-AC03-76SF00098