HIFAN 1139 LBNL–49528

PROGRESS IN HEAVY ION DRIVEN INERTIAL FUSION ENERGY: FROM SCALED EXPERIMENTS TO THE INTEGRATED RESEARCH EXPERIMENT*

J. J. Barnard[1], L. E. Ahle[1], D. Baca[2], R. O. Bangerter[2], F. M. Bieniosek[2], C. M. Celata[2], E. Chacon-Golcher[2], R. C. Davidson[3], A. Faltens[2], A. Friedman[1], R.M. Franks[2], D. P. Grote[1], I. Haber[4], E. Henestroza[2], M. J. L. de Hoon[2], I. Kaganovich[3], V. P. Karpenko[1], R. A. Kishek[5], J. W. Kwan[2], E. P. Lee[2], B. G. Logan[1], S.M. Lund[1], W. R. Meier[1], A. W. Molvik[1], C. Olson[7], L.R. Prost[2], H. Qin[3], D. Rose[6], G-L. Sabbi[2], T. C. Sangster[1], P. A. Seidl[2], W. M. Sharp[1], D. Shuman[2], J.L. Vay[2], W.L. Waldron[2], D. Welch[6], S.S. Yu[2]

1. Lawrence Livermore National Laboratory, Livermore, CA; 2. Lawrence Berkeley National Laboratory, Berkeley, CA; 3. Princeton Plasma Physics Laboratory, Princeton, NJ; 4. Naval Research Laboratory, Washington, D.C.; 5. University of Maryland, College Park, MD 6.Mission Research Corporation, Albuquerque, NM 7.Sandia National Laboratory, Albuquerque, NM

Abstract

The promise of inertial fusion energy driven by heavy ion beams requires the development of accelerators that produce ion currents (~100's Amperes/beam) and ion energies (~1 - 10 GeV) that have not been achieved simultaneously in any existing accelerator. The high currents imply high generalized perveances, large tune depressions, and high space charge potentials of the beam center relative to the beam pipe. Many of the scientific issues associated with ion beams of high perveance and large tune depression have been addressed over the last two decades on scaled experiments at Lawrence Berkeley and Lawrence Livermore National Laboratories, the University of Maryland, and elsewhere. The additional requirement of high space charge potential (or equivalently high line charge density) gives rise to effects (particularly the role of electrons in beam transport) which must be understood before proceeding to a large scale accelerator. The first phase of a new series of experiments in Heavy Ion Fusion Virtual National Laboratory (HIF VNL), the High Current Experiments (HCX), is now being constructed at LBNL. The mission of the HCX will be to transport beams with driver line charge density so as to investigate the physics of this regime, including constraints on the maximum radial filling factor of the beam through the pipe. This factor is important for determining both cost and reliability of a driver scale accelerator. The HCX will provide data for design of the next steps in the sequence of experiments leading to an inertial fusion energy power plant. The focus of the program after the HCX will be on integration of all of the manipulations required for a driver. In the near term following HCX, an Integrated Beam Experiment (IBX) of the same general scale as the HCX is envisioned.

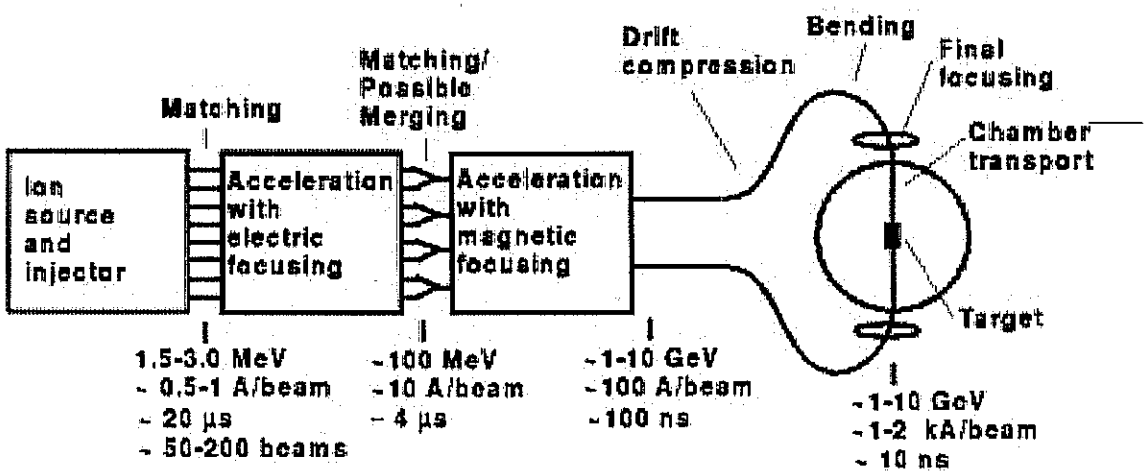

Figure 1. Schematic of the stages and beam manipulations required in a Heavy Ion Fusion driver.

* This work was performed under the auspices of the U.S. Department of Energy under University of California contract W-7405-ENG-48 at LLNL, and University of California contract DE-AC03-76SF00098 at LBNL, and PPPL contract

The step which bridges the gap between the IBX and an engineering test facility for fusion has been designated the Integrated Research Experiment (IRE). The IRE (like the IBX) will provide an integrated test of the beam physics necessary for a driver, but in addition will provide target and chamber data. This paper will review the experimental and theoretical progress in heavy ion accelerator driver research from the scaled experiments through the present experiments and will discuss plans for the IRE.

1 INTRODUCTION

Inertial fusion energy targets require deposition of beam energy onto small spots, 2 to 5 mm in radius at the ends of a hohlraum (indirect drive) or onto a spherical capsule (direct drive). The most detailed radiation/hydrodynamical simulations of heavy ion targets have been done for hohlraums in which the ions deposit their energy in converters which radiate their energy in x-rays, and the x-rays impinge on capsules ablating and compressing them[1]. The total pulse energy required is ~3 to 7 MJ, with a pulse duration of ~8-10 ns. The ion range required by the target is ~.02 to 0.20 g/cm^2, which implies an ion energy of between ~1 to 10 GeV for ion masses between ~80 and 200. Final ion currents between 30 and 900 kA, are thus needed to meet the pulse energy requirement. The high currents are achieved by compressing the beam length by a factor of order 20, so initial line charge densities between 15 and 900 μC/m are required. Quadrupole channels can transport a fraction of a μC/m at typical injection energies. Comparing what is required at the target with the transportable current illustrates the need for mulitple beams (10's to 100's). Figure 1 illustrates the manipulations envisioned in a heavy ion fusion driver. Injection of multiple beams, electric transport, a possible merge before magnetic transport, drift compression, beam bending, final focusing, and neutralized chamber transport are all manipulations that are being envisioned for a heavy ion fusion driver.

The issues facing HIF can be broadly classified into two main groups: cost and focusability. The cost issue is continually being addressed through technology development projects required for the near term experiments (such as superconducting magnets, induction core materials, and insulators.) System studies are also used to determine high leverage items affecting the overall cost of electricity.

The main scientific issue is focusability on the target. There are two main components which act to prevent focusability at the target:

1. Space charge: Because currents are large, and because the chamber environment is envisioned to be filled with residual gas at the millitorr level, the mainline approach is to ionize the gas at it enters the target chamber, and to utilize the photoionization of the chamber gas by the beam heated target X-rays. In both cases, the beam will draw electrons into its path to neutralize the space charge. Experiments and calculations are validating this picture.

2. Insufficient brightness: Over most of the beam path through the accelerator, economics dictates that space charge forces be much greater than thermal forces. At the target when the beam is focused down to a small spot thermal forces dominate (particularly when the beam is neutralized.) It is thus important to maintain low emittance beams throughout, even when the emittance is not dynamically important. By making small intense beams, target energy requirements can be reduced implying smaller, cheaper accelerators. So there is a big impact for getting the absolute brightest beams possible.

2 EXPERIMENTAL PROGRAM

2.1 Scaled Experiments[10]

Two flagship experiments of the HIF program in the mid-eighties and early nineties began the process of demonstrating that the manipulations required for an induction linac driver could be carried out.

In the Single Beam Transport Experiment (mid-1980's) [3], the question of what were the limits in undepressed and depressed phase advance was addressed. In contrast to some theoretical predictions of instabilities (using a KV distribution function), stable propagation was found for tune depressions (ratio of depressed to undepressed phase advance) as low as .1 to .2 (the limit achievable in the experiment). Undepressed phase advances greater than ~85 degrees were unstable for any significant tune depressions. Further, the experiment was at a length that was a significant fraction of the number of half-lattice periods in a driver (~10%).

In MBE-4 [4] (late 1980's and early 1990's) there was an initial demonstration of acceleration, current amplification, longitudinal confinement using "ear" fields and demonstration of the transport of multiple (i.e four) beams.

A bending experiment at LLNL [5], which demonstrated bending and acceleration using induction cells, sensing (using capacitive probes, even while firing the induction cells) and steering the beam. The original plan was to make the bend the beginning of a recirculating induction accelerator, but limited funding forced the program to concentrate on the main line approach which is the linac.

More recently [6] it was demonstrated that the four beams from MBE4 could be combined into a single beam, and achieve an emittance growth that was expected on the basis of both theory and simulation.

Also, recently [7] the SBTE apparatus was again used to ballistically focus a beam using a one-tenth scale version of a final focus design from the power plant study called HIBALL. Electric quads were used to prepare the beam for

entrance into a magnetic final focus system and a spot size consistent with space charge and emittance was produced. In a later version of the experiment a heated wire filament was placed in the beam path supplying the beam with neutralizing electrons. Simulations using the LSP code agreed well with the experiment [8].

Other scaled experiments include an adiabatic plasma lens [9], a channel transport experiment [9] and others[10]. including the University of Maryland electron beam experiments [11], which are highly relevant to HIF.

Some of the HIF scaled experiments (past, present, and future) are summarized in Table 1. From Table 1, it can be seen that nearly every major manipulation required in an HIF driver, has been carried out, at some level, in the scaled experiments.

2.2 Driver Scale Experiments

Presently, the HIF program is developing experiments in which the line charge density of the beam is at or near that expected for the early phase of a driver accelerator. Line charge density is important, because it determines the space charge potential drop of the beam from center to the pipe radius, and hence the confining potential for both unwanted electrons (in the accelerator) and wanted electrons (in the chamber). Hence, the present program is examining the science of beam propagation of "driver-scale" beams.

One of the main focuses of the program over the next two years is the High Current experiment (HCX) [12]. The first phase of the experiment is to transport a driver scale beam (~0.6 ampere and ~1.8 MeV of K^+) The potential drop from beam center to pipe radius will be ~5 keV. The first phase of the experiment will consist of 40 electrostatic quadrupoles with four magnetic quadrupoles which are on- hand to begin assessing magnetic transport. The second phase is currently planned to examine transport through 50-100 magnetic quads.

The beam filling factor r_{beam}/r_{pipe} is important for obtaining a cost optimized accelerator, and understanding the evolution of the emittance has strong implications for the target, and thus on overall cost. So the first phase of HCX will be to assess how close the beam can come to the pipe, by observing emittance growth, halo formation, and beam loss. The beam radius will be altered by changing the quadrupole voltages and by changing the current. The question of optimum steering will be addressed, and the rate of electron production and entrainment will be examined. The role of desorbed atoms, born from beam halo particles hitting the walls or from ionized residual gas atoms accelerated by the beam space charge towards the wall, will be assessed. Pulse duration limits (within the bounds of the experiment) from head particle loss effecting tail propagation will be explored.

Phase 1 will use the existing ESQ injector and matching section (which reduces the radius of the beam out of the diode and injector, and transform from a circular to an elliptical beam). This will be followed by four 10 quad blocks. At the beginning of each block there will be a quad which slides out of the way, so that diagnostics such as slit-scanners, or pepper-pots can be inserted into the beam path. Further, two of the quads in each 10 quad block can be displaced in x and y producing a dipole component, allowing steering experiments that place the beam closer to the wall. The first four quads in each block allow independent control of the voltages on each quad, so that the beam can be rematched if necessary, or envelope oscillations intentionally induced to examine halo production. Finally, one quad in each block can be intentionally rotated by up to a few degrees to look at the skew effects on envelope and emittance.

Many simulations have been carried out in support of both the phase I and phase II HCX [12], [13]. Examples include WARP code simulations of the non-linear multipole fields intrinsic to the prototype superconducting magnets, imperfectly aligned quadrupoles with small but finite rotation angles and beam displacements, and finite

					Science Issues																		
Experiment	Abbrev.	Era	Current, Voltage	HLP's	Emittance Growth	Sensing and Steering	Multiple Beams	Acceleration	Image Effects	Non-linear ext. fields	Long. compression	Beam merging	Space charge waves	Long. Instability	Beam bending	Dynamic aperture/halo	Electron effects	Longitud. Emit. growth	Unneutralized focus	Neutralized final focus	Self-pinched final focus	Target Physics	Reference
Single Beam Transport Experiment	SBTE	mid '80s	160 kV, 25 mA	67	X	X																	3
Multiple Beam Experiment-4	MBE-4	80's-90's	0.9 MeV, 90 mA	70	X	X	X	X	X	X	X							X					4
U. Md. Scaled Electron Expts.	UMD Exp.	80's-present	2.5-10 keV, 30-100 mA		X	X	X					X	X	X	X								11
Small Recirculator/Bending Expts.	SR	mid '90s	60 keV, 2 mA	10	X	X		X							X		X						5
Beam Combiner Experiment	Merge Exp.	96-00	160 kV, 4.5-16 mA	67	X	X	X		X			X											6
Scaled Final Focus Experiment	SFFE	96-00	120 kV, 0.080 mA	~20	X	X			X										X	X			7,8
ESQ Injector	ESQ	93-present	2 MeV, 0.8 A	4	X			X	X	X													15-17
Multiple Beamlet Injector	New Inject.	in progress	~1.6 MeV, 0.8 A/beam	~20	X		X	X	X	X													18,19
High Current Experiment	HCX	in progress	~2 MeV, 0.5-1.0 A	~100	X	X		X	X	X	X		X			X	X						12,13
Neutral Transport Experiment	NTX	in design	~2 MeV, 0.5-1.0 A	4-6	X					X							X		X	X			
Integrated Beam Experiments	IBX	future	~2-10 MeV,~1 A	~100	X	X		X	X	X	X		X		X	X	X	X		X			
Integrated Research Experiment	IRE	future	100-800 MeV, 1-2 kA tot	300-700	X	X	X	X	X	X	X	X	X	X	X	X	X	X	X	X	X	X	20

Table 1: Summary of Experiments in HIF Program

initial displacements of the beam, and finite initial mismatches.

Several magnets are being designed for use in the HCX, (with the technology developed highly relevant to future accelerators including the Integrated Research Experiment). An array of 21 pulsed normal magnets was designed and an array, which included 4 of these magnets, has been pulsed approximately 80,000 times. Pulsed magnets would not be used in a driver (because the overall efficiency of the accelerator would not be acceptable for a power plant application) but because of the cost advantage over superconducting magnets, pulsed magnets may be of value in an IRE or nearer -term experiment.

Two superconducting prototypes have been developed [14]. Both have circular apertures and square outer cross section, which would make them easily adaptable into a multi-beam array. One magnet uses rectangular Rutherford cables in a racetrack configuration, of two layers, whereas the second group uses six layers of circular cables placed into grooves in a plastic matrix. Both prototypes have reached at least 90% of their theoretical maximum gradient, which is well above the requirements for the HCX. A down select will be made within a year.

The existing ESQ (which will be the front end to the HCX) has been found to have a current density distribution which is peaked near the edges at the exit of the injector [15]. The cause appears to be spherical aberration, and reduction of the radius of the source from 8.5 cm to 5 cm and modifications to the extraction electrode, have, in simulations reduced the nonuniformity and have produced a more elliptical beam shape.

The other major VNL HIF experimental research project is design of a cost-effective injector. As pointed out earlier, multiple beams are required to transport the total charge required by the target. One way of doing this is to make a large diameter source that matches the maximum current limit of the ESQ transport channel. The ESQ Injector [17] is an example of this approach.

Another method, now being considered [18], is to merge hundreds of mm-scale beamlets into a single macro-beam. (There would still be tens to hundreds of macro-beams in the accelerator.) This merging beamlet approach has the potential to reduce both the transverse and longitudinal dimensions of a multi-beam injector. The Child-Langmuir law for a diode relates the current density J and voltage V across a gap of length d according to $J \sim V^{3/2} / d^2$. But breakdown voltages are proportional to d (for short distances [<~ 1 cm]) and roughly as $d^{1/2}$ for larger distances [>~ 1 cm]). So $J \sim V^{-5/2}$ (small d) or $J \sim V^{-1/2}$ (large d). In either case the current density increases and the voltage decreases, whereas the total current goes as $V^{3/2}$ (since d scales with the radius of the source). The beam brightness ~ current/emittance^2 ~ J/T, implying high current density translates to high brightness. Low V implies high current density but to get the required high current many beamlets (~100's per beam) are required. This approach is being both simulated using WARP and explored experimentally using a new 500 kV source test stand, now being completed at LLNL [19] to test this concept and do general research on ion sources for HIF.

Because of the large radius of the low current density source, the beamlines in a multiple beam injector must converge, as they proceed from the source to the transport region. To bend the beam gradually, and lower the beam radius from source to transport region, a large distance longitudinally is required to match the beam to the ESQ transport channel. With the multiple beamlet approach all of the beams can feed directly into the transport, channel, reducing substantially both length and radius. Further the beams can start out elliptical, minimizing the matching manipulations, in the matching section. This would be especially attractive for an IRE, where the front end is a much larger fraction of the cost than it is for a driver.

The final VNL experiment, now in the design stage, is a "Neutral Transport Experiment" or NTX, the purpose of which is to examine neutralized final focus of higher perveance beams. (This has been designed to operate at the end of the MBE-4 or at the end of the High Current Experiment). The experiment consists of a number of magnetic quadrupoles that form the final focus, followed by a short drift, corresponding to propagation in the chamber. An rf source (now being readied at PPPL) ionizes the plasma, and so the effect of plasma at various locations within the chamber can be explored. This will be a flexible experiment allowing the experimental variation of plasma densities and gradients. Also, the large perveance planned for this experiment implies large final focusing angles, implying larger geometric aberrations. The question of whether octupoles can correct for the third order aberrations.will be addressed experimentally on the NTX.

2.3 Next stage: Integrated Experiments

After the HCX, (or as part of the later stages of HCX) the program envisions a near term Integrated Beam Experiment (IBX) in which nearly all of the components of a driver are put into place. This would include injection, acceleration, longitudinal compression, and final focus, with a driver scale beam. The focus is on integration and validation. At the end of August a workshop will be held to try to systematically determine the science goals of IBX, and begin to scope out the accelerator parameters. The IBX will enable comparison of experimental data with source-to-target simulations, using WARP in the accelerator and LSP in the chamber.

The IBX will lay the ground work for the single final step between itself and a demonstration Inertial Fusion Energy test facility. That intermediate step is known as the Integrated Research Experiment (IRE).

The goals of the IRE go beyond just the understanding of high intensity beam physics [20]. The basic overriding principle is that together with the knowledge gained in the defense programs target physics program including the National Ignition Facility (NIF) and supporting technology programs, the IRE will give a basis to proceed to an IFE Engineering Test Facility. The areas of target physics (particularly those unique to ions [as opposed to lasers]) will begin being explored. (It is even possible that hydrodynamic motion during the initial "foot" phase of the pulse could be investigated.) Examination of a variety of chamber transport modes, including self-pinched modes, which are not accessible to the IBX, will be another major goal of the IRE. Further, chamber transport issues, particularly the interaction of beams with the liquid walls (Flibe) that are now favored to shield the solid walls of the target chamber will be a research goal of the IRE. These goals dictate the scale of the facility to be ~tenth scale of a driver in ion energy, and in the 30-300 kJ range in pulse energy.

In the mean time, our information about the IRE and drivers comes from simulations and theory. Recently there has been substantial progress made in simulations and theory of the accelerator, driver and drift compression section [21-25], as well as detailed simulations and theory of the chamber [26, 27], which include a number of plasma neutralization scenarios.

3. SUMMARY AND CONCLUSIONS

The Heavy Ion Fusion IFE program is transitioning from scaled experiments to experiments with beams that are driver scale in line charge density and pulse duration. The main scientific issues for the driver are: maintenance of high brightness beams and production and focusing of a highly neutralized beam in the chamber. WARP3D simulations of the accelerator and LSP simulations of the chamber, together with perturbative δf (BEST) simulations, theory and lower dimensional simulations, explore and validate physics of near-term experiments, mid-term IRE and further-term driver beams. The current experimental emphasis of the HIF program is on HCX, advanced injector concepts, and NTX Final Focus experiments, with the IBX and IRE to follow.

4 REFERENCES

[1] D. Callahan-Miller and M. Tabak, "Design of a distributed radidator target for inertial fusion driven from two sides with heavy ion beams," Nucl. Inst. An Meth. In Phys. Research, A., **415**, 75, (1998).

[2] W. Meier, A. Faltens, R. O. Bangerter, "An integrated systems model for heavy ion drivers," Nucl. Inst. and Meth. In Phys. Research, A., **415**, 249, (1998).

[3] M.G Tiefenback,. and D. Keefe, "Measurements of Stability Limits for a Space Charge Dominated Ion Beam in a Long A.G. Transport Channel," IEEE Transactions on Nuclear Science, **NS-32**, 2483 (1985).

[4] W.M. Fawley, T. Garvey, S. Eylon, E.Henestroza, A. Faltens, T.J. Fessenden, K. Hahn, and L. Smith, "Beam Dynamics Studies with the Heavy Ion Linear Induction Accelerator MBE-4," Phys. Plasmas **4**, 880 (1997).

[5] L. Ahle et al, "Results from the recirculator project at LLNL,"Nuclear Instruments and Methods in Physics Research A, **464**, 557 (2001).

[6] P.A. Seidl et al, "Progress on the scaled beam combining experiments at LBNL," Nucl. Instr. and Methods in Physics Research A, **415**, 243 (1998).

[7] S. MacLaren, E. Henestroza, A. Faltens, G. Ritchie, and P.Seidl, "Results from the Scaled Final Focus Experiment," Nucl. Inst. and Meth. in Phys. Res. A **464**, 126, (2001).

[8] [22] D. Welch and D. Rose, "Beam,Neutralization in the Scaled Final Focus Experiment," Proceedings of the 2001 Particle Accelerator Conference (RPAH068), (2001).

[9]A. Tauschwitz et al, "Plasma lens focusing and plasma channel transport for heavy ion fusion," Fusion Engineering and Design, 32-33, 493, (1996).

[10] P.A. Seidl et al,"Experiments at the Virtual National Laboratory for Heavy Ion Fusion,")", Nucl. Inst. and Meth. In Phys. Research, A., **415**, 369, (2001).

[11] M. Reiser, et al, "The Maryland Electron Ring for Investigation of Space Charge Dominated Beams in a Circular FODO lattice," Proceedings of the 1999 Particle Accelerator Conference, NY p. 234 (1999). Also P. Oshea et al, "The Univ. of Md. Electron Ring (UMER)", Nucl. Inst. and Meth. In Phys. Research, A., **415**, 646, (2001).

[12] P. A. Seidl et al, "Overview of the Scientific Objectives of the High Current Experiment for Heavy-Ion Fusion," Proceedings of the 2001 Particle Accelerator Conference (RPAH037), (2001).

[13]] C.M. Celata, D.P. Grote, I. Haber, "PIC Simulations of Beam Dynamics Experiments on High Current Experiment," Proceedings of the 2001 Particle Accelerator Conference (RPAH033), (2001).

[14] G-L Sabbi et al, "Development of Superconducting Quadrupoles for Heavy Ion Fusion," Proceedings of the 2001 Particle Accelerator Conference (RPPH088), (2001).

[15] F. Bieniosek, E. Henestroza, J.W. Kwan,"2 MV Injector for HCX," Proceedings of the 2001 Particle Accelerator Conference (WPAH010), (2001).

[16] E. Henestroza et al, "Beam Dynamics Studies of the Injector and Matching Section for HCX," Proceedings of the 2001 Particle Accelerator Conference (RPAH035), (2001).

[17] S.S. Yu, S. Eylon, E. Henestroza, C. Peters, L. Reginato, A. Tauschwitz, D. Grote, and F. Deadrick, "2 MV injector as the Elise front-end and as an experimental facility," Fusion Engineering and Design **32-33**, 317 (1996).

[18] J.W. Kwan et al,"Design of a Compact High Current Injector for Heavy Ion Fusion," Proceedings of the 2001 Particle Accelerator Conference (WPAH013), (2001).

[19] L. Ahle et al,"Initial Experiments of RF Gas Plasma Source for Heavy Ion Fusion," Proceedings of the 2001 Particle Accelerator Conference (FOAC005), (2001).

[20] J.J. Barnard et al,"Planning for a Heavy Ion Fusion Integrated Research Experiment," ," Nucl. Instr. and Methods in Physics Research A **464**, 621 (2001).

[21]I. Haber et al, "Recent Progress in Heavy Ion Fusion Simulations," "Nuclear Instruments and Methods in Physics Research A, **464**, 343, (2001).

[22] A. Friedman et al, "Beam Simulations for IRE and Driver," "Nuclear Instruments and Methods in Physics Research A, **464**, 653 (2001).

[23]M. de Hoon, E.P. Lee, J.J. Barnard,"Drift Compression of Space Charge Dominated Beams," Proceedings of the 2001 Particle Accelerator Conference (FOAC006), (2001).

[24] E.P. Lee and J.J. Barnard,"Design Strategies for Final Pulse Compression with Bending for Heavy Ion Fusion Drivers," Proceedings of the 2001 Particle Accelerator Conference (RPAH036), (2001).

[25] C. Jun et al, "Study of Drift Compression for Heavy Ion Fusion," Proceedings of the 2001 Particle Accelerator Conference (TPPH043), (2001).

[26] D.Welch et al,"Simulation of Self-Pinched Chamber Transport of Ions for Heavy Ion Fusion," Proceedings of the 2001 Particle Accelerator Conference (RPAH067), (2001).

[27] Kaganovich, I., "Nonlinear Charge and Current Neutralization for an Intense Ion Beam Pulse Propagating Through a Background Plasma," Proceedings of the 2001 Particle Accelerator Conference (TPPH317), (2001).