PROCEEDINGS, Thirtieth Workshop on Geothermal Reservoir Engineering
Stanford University, Stanford, California, January 31-February 2, 2005
SGP-TR-176

NEAR-SURFACE CO_2 MONITORING AND ANALYSIS TO DETECT HIDDEN GEOTHERMAL SYSTEMS

Jennifer L. Lewicki and Curtis M. Oldenburg

Lawrence Berkeley National Laboratory
Earth Sciences Division, 1 Cyclotron Rd.
Berkeley, CA, 94720, USA
e-mail: jllewicki@lbl.gov

ABSTRACT

"Hidden" geothermal systems are systems devoid of obvious surface hydrothermal manifestations. Emissions of moderate-to-low solubility gases may be one of the primary near-surface signals from these systems. We investigate the potential for CO_2 detection and monitoring below and above ground in the near-surface environment as an approach to exploration targeting hidden geothermal systems. We focus on CO_2 because it is the dominant noncondensible gas species in most geothermal systems and has moderate solubility in water. We carried out numerical simulations of a CO_2 migration scenario to calculate the magnitude of expected fluxes and concentrations. Our results show that CO_2 concentrations can reach high levels in the shallow subsurface even for relatively low geothermal source CO_2 fluxes. However, once CO_2 seeps out of the ground into the atmospheric surface layer, winds are effective at dispersing CO_2 seepage. In natural ecological systems in the absence of geothermal gas emissions, near-surface CO_2 fluxes and concentrations are predominantly controlled by CO_2 uptake by photosynthesis, production by root respiration, microbial decomposition of soil/subsoil organic matter, groundwater degassing, and exchange with the atmosphere. Available technologies for monitoring CO_2 in the near-surface environment include the infrared gas analyzer, the accumulation chamber method, the eddy covariance method, hyperspectral imaging, and light detection and ranging.

To meet the challenge of detecting potentially small-magnitude geothermal CO_2 emissions within the natural background variability of CO_2, we propose an approach that integrates available detection and monitoring techniques with statistical analysis and modeling strategies. The proposed monitoring plan initially focuses on rapid, economical, reliable measurements of CO_2 subsurface concentrations and surface fluxes and statistical analysis of the collected data. Based on this analysis, areas with a high probability of containing geothermal CO_2 anomalies can be further sampled and analyzed using more expensive chemical and isotopic methods. Integrated analysis of all measurements will determine definitively if CO_2 derived from a deep geothermal source is present, and if so, the spatial extent of the anomaly. The suitability of further geophysical measurements, installation of deep wells, and geochemical analyses of deep fluids can then be determined based on the results of the near surface CO_2 monitoring program.

INTRODUCTION

Worldwide, most commercial geothermal projects have been developed in or near areas of surface manifestations (e.g.. hot springs, geysers, fumaroles). Also, the majority of hydrothermal systems with obvious surface expressions in the U.S. have been explored to determine their development potential. Discovery of new geothermal systems will therefore require exploration of areas where the resources are either hidden or lie at greater depths than presently known reservoirs. As a result, research must be geared toward the development of novel exploration techniques to locate these less-obvious geothermal systems.

We define "hidden" geothermal systems as those with no apparent surface features. Emissions of moderate-to-low solubility gases (e.g., CO_2, He, CH_4) may be one of the primary near-surface signals from these systems. Therefore, the detection of anomalous gas emissions related to hidden geothermal systems may be an important tool to discover new resources (Klusman et al., 2000). We focus our study on the detection and monitoring of CO_2 in the near-surface environment as an approach to discover hidden geothermal systems because (1) CO_2 is the major noncondensible gas present in geothermal systems

Table 1. Measured soil CO_2 fluxes and concentrations at selected locations.

Site	Maximum CO_2 flux ($g\ m^{-2}\ d^{-1}$)	Average CO_2 flux ($g\ m^{-2}\ d^{-1}$)	Maximum soil CO_2 conc. (vol.%)	References
Solfatara crater, Italy	75,000	1520	na	Chiodini et al., 2001; Cardellini et al., 2003
Poggio dell'Ulivo cold degassing area, Italy	22,000	na	na	Cardellini et al., 2003
Poas volcano, Costa Rica	140	na	16	Williams Jones et al., 2000
Arenal volcano, Costa Rica	291	na	7	Williams Jones et al., 2000
Masaya volcano, Nicaragua	50,000	na	na	Lewicki et al., 2003
Oldoinyo Lengai volcano, Tanzania	1350	166	90	Koepenick et al., 1996
Yellowstone volcanic system, USA	30,000	Travertine areas: 89 Acid sulfate areas: 1200	90	Werner et al., 2000
Dixie Valley Geothermal Field, USA	570	na	na	Bergfeld et al., 2001
Mammoth Mountain, USA	>10,000	1500-2100	90	Gerlach et al., 2001; Sorey et al., 1998
Miyakejima volcano, Japan	18,150	na	na	Hernandez et al., 2001

(e.g., Ellis and Mahon, 1977), (2) due to its moderate solubility in water, CO_2 from volcanic-hydrothermal sources tends to migrate to the near-surface in the gaseous phase in equal or greater proportion than dissolved in groundwater (e.g., Cruz et al., 1999; Favara et al., 2001; Evans et al., 2002), and (3) a broad range of technologies are available to monitor CO_2 in the near-surface environment. Importantly, however, CO_2 is produced in the near surface by a variety of biological processes, and identifying CO_2 from hidden geothermal resources will involve monitoring a system with large variation in fluxes and concentrations arising from natural biologic and hydrologic processes. The detection of anomalous CO_2 will therefore require searching for potential geothermal anomalies, likely of small magnitude, over areas of tens of km^2 or more within the varying background CO_2 fluxes and concentrations. Here, we present integrated measurement, modeling, and analysis strategies to meet this challenge.

CO_2 IN KNOWN VOLCANIC AND HYDROTHERMAL SYSTEMS

Numerous diffuse CO_2 degassing studies have been conducted in known (i.e., "visible") volcanic and hydrothermal environments, many of which focused on characterizing the magnitude and spatial distribution of CO_2 emissions. Table 1 summarizes the maximum (and average, if applicable) surface CO_2 fluxes and soil CO_2 concentrations measured in selected known systems. As shown, the maximum CO_2 fluxes and concentrations measured varied widely, but could reach up to ~75,000 $g\ m^{-2}\ d^{-1}$ and 90 vol.%, respectively. Both elevated CO_2 fluxes and concentrations were commonly associated with faults, fractures, eruptive fissures, and vents in the study areas. While surface CO_2 emission rates from hidden geothermal systems will likely be lower than those measured in known volcanic and hydrothermal systems, the preferential pathways for CO_2 flow from depth to the near surface will probably be similar.

SIMULATIONS OF GEOTHERMAL CO_2 MIGRATION

We conducted numerical simulations to evaluate the magnitudes and spatial distribution of anomalous near-surface CO_2 concentrations and fluxes that might result when CO_2 leaks from a hidden geothermal system at depth. Based on this information, we can then design and evaluate potential monitoring and detection methods.

We use the numerical code T2CA (Oldenburg and Unger, 2004), a research module of TOUGH2 (Pruess et al., 1999). T2CA retains the fundamental porous media flow and transport capabilities of TOUGH2, and models five components (water, brine, CO_2, a gas tracer, and air) under isothermal or non-isothermal conditions. The main advance in T2CA is the implementation of a simple atmospheric transport and dispersion capability for dilute gases based on the variable-K theory (Arya, 1999). That is, a constant time-averaged logarithmic wind velocity profile is specified for advection, and atmospheric dispersion is modeled as a diffusion process with variable diffusivity as a function of height above the ground surface. In this way, T2CA models coupled subsurface and atmospheric surface layer gas flow and transport.

The geologic framework of the modelled hidden geothermal system is based loosely on an arid Basin and Range Province system like the Dixie Valley

(Nevada) geothermal system, only without any surface manifestations. In particular, we consider a two-dimensional system in which an alluvial fan covers a geothermal anomaly associated with deep range-bounding faults so that it is essentially invisible at the surface (Figure 1). Within this system, we model the upward migration of CO_2 from a small (15 m^2) region that represents the top of a conductive fault, located near the water table, 300 m in the horizontal direction from the left boundary. The CO_2 spreads in the heterogeneous system (i.e., the alluvial fan) as it migrates upward until it seeps out at the ground surface. We consider both a homogeneous permeability case, along with five realizations of heterogeneous permeability. The heterogeneous permeability cases are significant because gas migration will tend to follow high-permeability pathways. Here, permeability is characterized by a mean value of 10^{-12} m^2, and varies by four orders of magnitude. There is a 45-m correlation length in the *Y*-direction (sub-horizontal), and no correlation in the vertical direction, thereby creating a layered structure intended to represent an alluvial fan. We simulated source strength CO_2 fluxes of 5.76, 57.6 and 576 g m^{-2} d^{-1}. These fluxes were arbitrarily chosen to produce small CO_2 seepage fluxes, and are significantly lower than those measured in known/visible volcanic and hydrothermal systems (e.g., Table 1). We chose to model this low range of values to test the limits of available technologies for near-surface CO_2 detection. For reference, the largest source CO_2 flux we consider is similar to the highest surface CO_2 fluxes measured at Dixie Valley (Table 1). We present results for 200 years of simulation, at which point the gas seepage flux and concentrations are nearly steady.

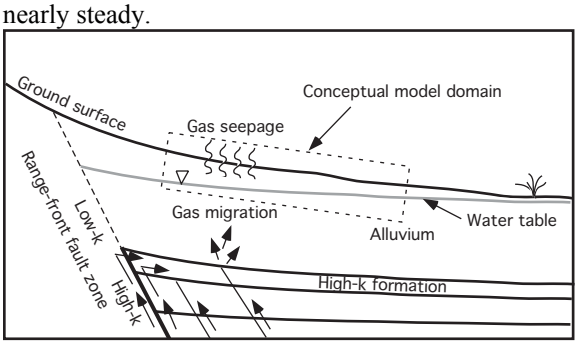

Figure 1. Conceptual model for gas migration from a deep hidden geothermal system. Also shown is the outline (dashed) of the two-dimensional model domain (see Figure 2).

To emphasize the key simulation results relevant to design of a near-surface CO_2 monitoring program, we present coupled CO_2 subsurface migration and surface-layer mixing for one of our five heterogeneous permeability realizations, high source CO_2 flux, and constant wind speeds of 1 and 3 m s^{-1} (Figure 2). Figure 2 shows that the gas in the CO_2 plume is essentially pure CO_2 in the subsurface, even though the source CO_2 flux is quite small. Importantly, surface-layer winds are capable of diluting CO_2 concentrations to very small values above the ground surface. For example, surface-layer CO_2 concentrations only reach maximum values of ~10^{-7} mole fraction (0.1 ppmv) for both wind speeds considered. Overall, the high simulated CO_2 concentrations observed at the ground surface and in the subsurface, relative to the atmospheric surface layer, suggest that monitoring of CO_2 in the subsurface or at the ground surface may have greater potential to detect anomalous CO_2 of geothermal origin than above-ground techniques.

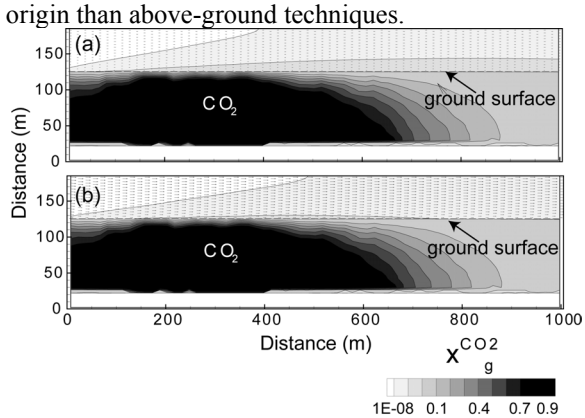

Figure 2. Coupled CO_2 subsurface migration and surface-layer mixing at t = 200 years for one heterogeneous permeability realization, high source CO_2 flux (576 g m^{-2} d^{-1}), and constant wind speeds of (a) 1 m s^{-1} and (b) 3 m s^{-1}. CO_2 concentration is in mole fraction.

Figure 3 shows horizontal profiles of CO_2 concentration at 3 m depth and surface CO_2 flux for the low, medium, and high source CO_2 flux and one heterogeneous permeability realization. These profiles all show a similar increase and then decrease in concentration and flux crossing the CO_2 plume. Maximum CO_2 concentrations for the low, medium, and high source strengths are about 2 x 10^4, 2 x 10^5 and 7 x 10^5 ppmv, respectively, whereas maximum surface CO_2 fluxes are about 4 x 10^{-4}, 0.52, and 100 g m^{-2} d^{-1}, respectively. These profiles also show that the width of the CO_2 plume increases with increasing source strength. If the source area of CO_2 emission were increased (i.e., to simulate more diffuse, rather than focused CO_2 flow), the magnitude of the near-surface CO_2 concentration and flux signals would decrease, while the width of the anomaly would increase. Relative to the homogeneous permeability cases (not shown here), fluxes along the heterogeneous profiles are more spatially variable and maximum observed fluxes may be greater or lower, depending whether high or low permeability was assumed, respectively. Complete results for the five heterogeneous permeability realizations, homogeneous permeability, and three source CO_2

flux values can be found in Lewicki and Oldenburg (2004).

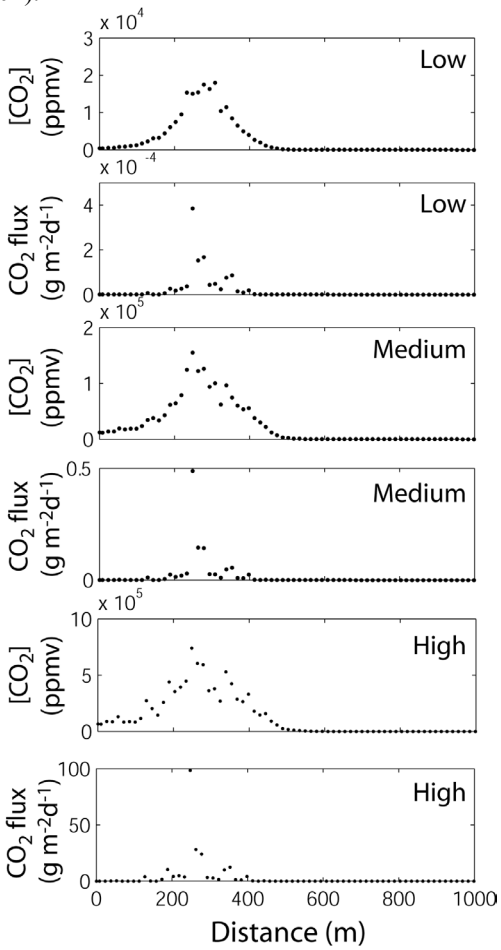

Figure. 3. Horizontal profiles of shallow subsurface CO_2 concentration ([CO_2], 3 m depth) and surface CO_2 flux for low, medium, and high (5.76, 57.6, and 576 g m^{-2} d^{-1}, respectively) CO_2 source flux, one heterogeneous permeability realization, and t = 200 years.

BACKGROUND CO_2

We define "background" CO_2 as CO_2 derived mainly from the atmosphere and biologically mediated oxidation of organic carbon. Background soil CO_2 fluxes and concentrations are primarily dependent on CO_2 production in the soil by biological processes, flow of CO_2 from biologic/hydrologic sub-soil sources into the soil column, and exchange of CO_2 with the atmosphere by concentration and pressure-driven transport processes (diffusion and advection, respectively).

Biologically produced CO_2 in soils (i.e., soil respiration) is derived from root respiration and oxidative decay of organic matter. While many factors may regulate soil respiration rates, changes in atmospheric and soil temperature and soil moisture have been shown to strongly influence these rates and related CO_2 concentrations and fluxes. CO_2 that enters soil from sub-soil sources can be derived from groundwater degassing of CO_2 derived from respiration, atmospheric, and carbonate mineral sources. Also, production of CO_2 at sub-soil depths can occur by oxidative decay of relatively young or ancient (peat, lignite, kerogen) organic matter in the vadose zone. Exchange of CO_2 from subsurface sources with the atmosphere can occur by diffusion and/or advection. Diffusive flow depends on the gas production rate and soil temperature, moisture, and properties such as porosity. Advective flow can be driven by changes in atmospheric temperature, pressure, wind, and rainfall.

The chemical and isotopic compositions of gases collected at soil and sub-soil depths provides information on CO_2 production and the source of this CO_2 (Table 2). CO_2 concentration profiles measured with depth in the vadose zone can yield information about CO_2 production. For example, an increase in CO_2 concentration with depth below the soil indicates CO_2 production at sub-soil depths. Production of CO_2 by oxidative decay of organic matter tends to consume O_2 at a similar rate. Also, atmospheric O_2 will diffuse down into the soil and sub-soil as sub-surface CO_2 diffuses to the atmosphere. A flux of geothermal CO_2 would produce elevated CO_2 concentration at depth, relative to the atmosphere, but would not be accompanied by O_2 consumption, although atmospheric O_2 would diffuse down into the soil. Based on these general processes, the CO_2 and O_2 concentration profiles should be different, depending on whether a geothermal flux is present. One might expect groundwater degassing of respiration and atmospheric-derived CO_2 to show similar chemical trends within the vadose zone to degassing of geothermal CO_2. However, vadose zone CO_2 concentrations produced by groundwater degassing and biological respiration processes have generally been reported to be less than 13 vol.% CO_2 (e.g., Wood and Petraitis, 1984; Amundson and Davidson, 1990; Wood et al., 1993), whereas near-surface CO_2 concentrations associated with geothermal emissions could be much higher. For example, simulated geothermal source CO_2 fluxes of 57.6 to 576 g m^{-2} d^{-1} produce maximum near-surface CO_2 concentrations of ~20–70 vol.% ($2x10^5$ to $7x10^5$ ppmv, Figure 2). Importantly, however, the maximum near-surface CO_2 concentration produced

Table 2. Chemical and isotopic signatures related to CO_2 derived from different sources.

CO_2 source	$\delta^{13}C_{CO2}$ (‰)	$\Delta^{14}C_{CO2}$ (‰)	Near-surface CO_2 conc.	CO_2 conc. profile with depth	O_2 conc. profile with depth

Atmosphere	-7	70	Low	na	na
Plant root respiration and oxidative decay of young soil organic matter	C_3: -24 to –38 C_4: -6 to –19	≥70	Low to moderate	Increasing through soil zone	Decreasing through soil zone
Oxidative decay of ancient organic matter	C_3: -24 to –38 Aquatic/C_4: -6 to –19 Also age dependent	Highly depleted to absent, depending on age	Low	Potentially increasing through vadose zone	Potentially decreasing through vadose zone
Marine carbonate rocks	0 ± 4	Absent	Low	Increasing through vadose zone	No effect
Geothermal	-2 to -6	Absent	Moderate to high	Increasing through vadose zone	No effect

Conc., C_3, and C_4, refer to concentration, C_3 plants, and C_4 plants, respectively. All near-surface concentrations given are general estimates; they are strongly dependent on the magnitude of the CO_2 flux.

by a source CO_2 flux of 5.76 g $m^{-2}d^{-1}$ is only predicted to be ~2 vol.% ($2x10^4$ ppmv, Figure 2), which could be problematic to distinguish from background CO_2 concentrations. Table 2 also shows that the ranges of typical carbon isotopic compositions of geothermal CO_2 are distinct from those whose dominant sources are background biological CO_2. Therefore, analysis of the $\Delta^{14}C$ and $\delta^{13}C$ compositions of gases collected from the soil and, in particular, from the sub-soil where biologic CO_2 production rates are low can serve as a tool to distinguish CO_2 of geothermal from background origin.

INSTRUMENTATION FOR MONITORING CO_2

A broad range of technologies is available to measure near-surface CO_2 concentrations and fluxes to detect anomalous CO_2 of geothermal origin. These technologies include (1) the infrared gas analyzer (IRGA) for measurement of concentrations at point locations, (2) the accumulation chamber (AC) method for measuring soil CO_2 fluxes at point locations, (3) the eddy covariance (EC) method for measuring net CO_2 flux over a given area, (4) hyperspectral imaging of vegetative stress resulting from elevated CO_2 concentrations, and (5) light detection and ranging (LIDAR) that can measure CO_2 concentrations over an integrated path in the air column. These techniques differ from one another in terms of the spatial and temporal scale of the measurement, measurement sensitivity and error, and cost. Here, we focus on the relatively low-cost and reliable IRGA, AC, and EC methods for CO_2 concentration and flux measurements.

Infrared Gas Analyzer

The infrared gas analyzer (IRGA) is an instrument commonly used to measure CO_2 concentration in subsurface or atmospheric air. The measurement is based on CO_2 absorption of infrared radiation within a sample gas cell. Portable IRGAs are available for use in the field and can make single or continuous measurements over time, which may be made within about one second to minutes, depending on the instrument. IRGAs are available to measure CO_2 concentration over a low range (e.g., 0-1000 ppmv) or over a high range (e.g., 0-100 vol.%). The precision and accuracy can be as good as ± 0.2 ppmv at 350 ppmv and ± 1%, respectively. The cost of equipment may range from $500 to $30,000.

Soil or subsoil gas CO_2 concentrations can be rapidly measured at many point locations within a large area using a probe and a portable IRGA. Using this method, a probe is driven down to the depth of interest, gas is pumped from the soil into the IRGA by an internal pump, and CO_2 concentration is measured.

Accumulation Chamber Method

IRGAs may be coupled with additional instrumentation to obtain surface CO_2 fluxes. For example, the accumulation chamber (AC) method (e.g., Chiodini et al., 1998) is used to measure soil CO_2 flux using an AC and an IRGA. An AC with an open bottom (cm^2 scale) is placed on the soil surface, the contained air is circulated through the AC and the IRGA, and the rate of change of CO_2 concentration in the AC is measured by the IRGA (Figure 4). The CO_2 flux is then calculated as proportional to the rate of change. The accuracy of the AC method was estimated to be –12.5 % due to alteration of gas flow by the AC (Evans et al., 2002); precision is ± 10 % (Chiodini et al., 1998). Each AC measurement is typically made within several minutes by one person, allowing for many measurements to be made over relatively short periods of time under variable terrain conditions. The cost of the portable AC instrumentation typically ranges from $15,000 to $25,000.

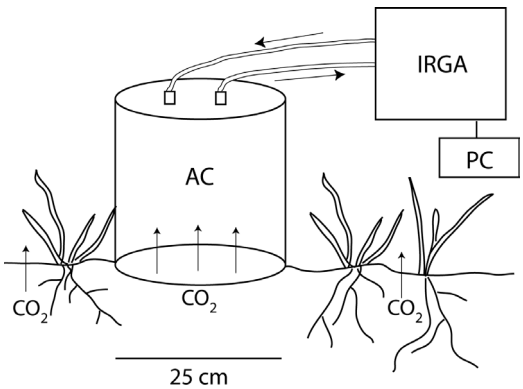

Figure 4. Schematic diagram of an accumulation chamber (AC) measurement system of soil CO_2 flux. The air contained in the AC is circulated through the AC and the infrared gas analyzer (IRGA) and the rate of change of CO_2 concentration in the AC is measured by the IRGA and recorded by the computer (PC).

Eddy Covariance

Eddy covariance (EC) (e.g., Baldocchi et al., 1988; Gouldin et al., 1996) is a technique whereby high-frequency measurements of atmospheric CO_2 concentration at a fixed height above ground are made by an IRGA, along with micrometeorological variables such as wind velocity, temperature, and relative humidity (Figure 5). Integration of these measurements provides a gross conservation of energy and mass over an area of land (the EC footprint) from which the net CO_2 flux is derived. The method essentially involves time averaging the product of the time series of fluctuating CO_2 concentration and vertical wind velocity. Under steady-state conditions and for sufficiently long averaging time, this converges to the ensemble mean flux. The measured vertical CO_2 flux is an integral of the surface flux over the upwind footprint (typically m^2 to km^2), the size of which scales with the measurement height, and is also dependent on meteorological conditions. One advantage of EC is that it provides a spatially and temporally averaged measurement, potentially providing more representative flux data and allowing for more efficient monitoring strategies than point measurements can provide. A limitation of the EC method is that it assumes a horizontal and homogeneous surface, and violations of this assumption can introduce significant error into the measurement. Estimates of the precision of EC vary from ± 5 to 30%. Short-term error has been estimated to be ± 7% during the daytime and ± 12% during the nighttime; long-term error is on the order of ± 5%. The cost of EC equipment ranges from ~$15,000 to $40,000.

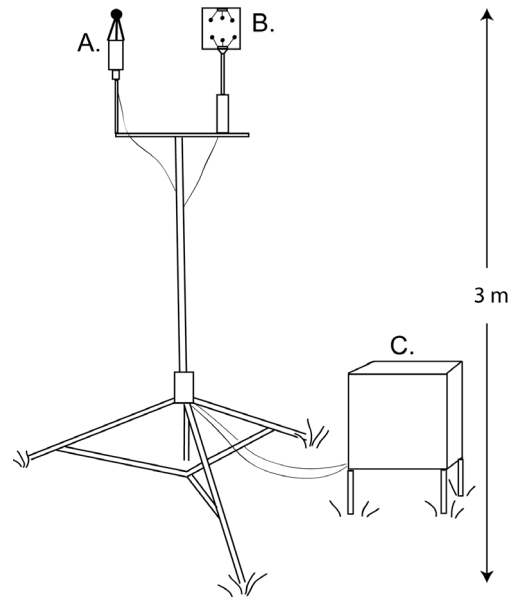

Figure 5. Schematic diagram of an eddy correlation (EC) instrumentation tower to measure surface CO_2 flux. An (A) open-path IRGA, (B) high frequency response sonic anemometer, and (C) box containing power source and datalogger/PC are shown.

STRATEGIES FOR DETECTION OF GEOTHERMAL CO_2

To meet the challenge of detecting potentially small-magnitude geothermal CO_2 emissions within the natural background variability of CO_2, we propose an approach that integrates available detection and monitoring techniques with statistical analysis and modeling strategies. Overall, we advocate a monitoring strategy that initially focuses on rapid, economical, reliable measurements of CO_2 concentrations in the soil and potentially in pre-existing wells/gradient holes within the study area, and surface CO_2 fluxes using the AC method ± EC. Our objective is to minimize the number of these measurements and then focus more time- and cost-intensive methods on "high-probability" anomalies of geothermal origin.

Even small geothermal source CO_2 fluxes are expected to produce high CO_2 concentrations within the vadose zone. As a result, if wells/gradient holes already exist within the area targeted for geothermal exploration, they should be sampled for CO_2 concentration (± additional chemical and isotopic analyses). Point measurements of soil CO_2 fluxes and concentrations should also be made along grids using the AC method and a portable IRGA, respectively. If the study area satisfies the terrain and vegetation distribution requirements of the EC technique, it should be used to measure net surface

fluxes. Particular attention should be paid to characterizing gas flow along high-permeability pathways, such as faults/fractures. Importantly, the spatial and temporal variability of soil CO_2 fluxes and concentrations should also be quantified within a background area with similar geologic, climatic, and ecosystem characteristics to the area targeted for geothermal exploration. Statistical analyses of data collected from both areas should be used to guide sampling strategy, discern spatial patterns that may be indicative of geothermal CO_2 emissions, and assess the presence of geothermal CO_2 within the natural background variability with a desired confidence level. To this end, Bayesian statistical analysis of CO_2 concentration and flux measurements in both the area targeted for geothermal exploration and the background study area should be used to identify the presence (or absence) of CO_2 anomalies with high statistical confidence (e.g., Bayes, 1763; Lewicki and Oldenburg, 2004). Also, contour maps of the study areas should be made for soil CO_2 concentration and flux magnitude, and these parameters' autocorrelation and cross-correlation coefficients.

Once CO_2 concentrations and fluxes have been determined with high confidence to be of geothermal origin, more expensive sampling of gas profiles with depth through the vadose zone, and chemical and isotopic analyses could be undertaken. In particular, an increase in CO_2 concentration with depth would indicate deep CO_2 emissions. Also, the carbon-13 and carbon-14 values of subsurface CO_2 should distinguish CO_2 of geothermal from background origin (Table 2). Integrated analysis of all measurements will determine definitively if CO_2 derived from a deep geothermal source is present, and if so, the spatial extent of the anomaly.

CONCLUSIONS

The properties of CO_2, methods for detection and monitoring of this gas, and the ranges of natural background CO_2 fluxes and concentrations are generally well known. We are able to gain some insight into near-surface CO_2 concentrations and fluxes resulting from CO_2 migration and seepage from hidden geothermal reservoirs using numerical simulation. Nevertheless, detecting small anomalous geothermal CO_2 fluxes and concentrations within natural background CO_2 variations poses a challenge. The exploration strategy that we propose to find geothermal CO_2 involves integrated monitoring, modeling, and statistical analysis to understand the natural system. Once this understanding is achieved, integrated measurement, monitoring, and sampling technologies can be applied toward the characterization of CO_2 within the study area. If CO_2 concentrations and fluxes are suggestive of the presence of CO_2 derived from a geothermal source, the area should be investigated further by more cost- and time-intensive vertical profile sampling and isotopic analyses. Integrated analysis of all measured data will determine definitively if CO_2 derived from a deep geothermal source is present, and if so, the spatial extent of the anomaly. The appropriateness of further geophysical measurements, installation of deep wells, and geochemical analyses of deep fluids can then be decided based on the results of the near surface CO_2 monitoring program.

REFERENCES

Amundson, R.G. and E.A. Davidson (1990), "Carbon and nitrogeneous gases in the soil atmosphere", *Journal of Geochemical Explor*ation, **38**, 13-41.

Arya, S.P. (1999), "*Air Pollution Meteorology and Dispersion"*, Oxford University Press.

Baldocchi, D.D., Hicks, B.B. and Meyers, T.P. (1988), "Measuring biosphere-atmosphere exchanges of biologically related gases with micrometeorological methods", *Ecology,* **69**, 1331–1340.

Bayes, T. (1763), "An essay towards solving a problem in the doctrine of Chances", *Philosophical Transactions of the Royal Society of London,* **53**, 370–418.

Bergfeld, D., F. Goff, and C.J. Janik (2001), "Elevated carbon dioxide flux at the Dixie Valley geothermal field, Nevada; relations between surface phenomena and the geothermal reservoir", *Chemical Geology*, **177**, 43-66.

Cardellini, C., G. Chiodini, F. Frondini, D. Granieri, J. Lewicki, and L. Peruzzi (2003) "Accumulation chamber measurements of methane fluxes: application to volcanic-geothermal areas and landfills", *Applied Geochemistry,* **18**, 45-54.

Chiodini, G., C. Cardellini, F. Frondini, D. Granieri, L. Marini, and G. Ventura (2001), "CO_2 degassing and energy release at Solfatara Volcano, Campi Flegrei, Italy", *Journal of geophysical Research,* **106**, 16,213–16,221.

Chiodini, G., G. R. Cioni, M. Guidi, B. Raco, and L. Marini (1998), "Soil CO_2 flux measurements in volcanic and geothermal areas", *Applied Geochemistry,* **13**, 543–552.

Cruz, J.V., R.M. Couthinho, M.R. Carvalho, N. Oskarrson, and S.R. Gislason (1999), "Chemistry of waters from furnas volcano, Sao Miguel, Azores: fluxes of volcanic carbon dioxide and leached materials", *Journal of Volcanology and Geothermal Research,* **92**, 151-167.

Ellis, A.J. and W.A.J. Mahon (1977), *Chemistry and Geothermal Systems*, Academic Press, New York.

Evans, W. C., M. L. Sorey, A. C. Cook, B. M. Kennedy, D. L. Shuster, E. M. Colvard, L. D. Wjite, and M. L. Huebner (2002), "Tracing and

quantifying magmatic carbon discharge in cold groundwaters: lessons learned from Mammoth Mountain, USA", *Journal of Volcanology and Geothermal Research,* **114**, 291–312.

Evans, W.C., M.L. Sorey, B.M. Kennedy, D.A. Stonestrom, J.D. Rogie, and D.L. Shuster (2001), "High CO_2 emissions through porous media: Transport mechanisms and implications for flux measurement and fractionation", *Chemical Geology*, **177**, 15-29.

Favara, R. S. Giammanco, S. Inguaggiatio, G. Pecoraino (2001), "Preliminary estimate of CO_2 output from Pantelleria Island volcano (Sicily, Italy): evidence of active mantle degassing", *Applied Geochemistry,* **16**, 883-894.

Gerlach, T.M., M.P. Doukas, K.A. McGee, and R. Kessler (2001), "Soil efflux and total emission rates of magmatic CO_2 at the Horseshoe Lake tree kill, Mammoth Mountain, California", *Chemical Geology,* **177**, 101-116.

Gouldin, M.L., J.W. Munger, S.-M. Fan, B.C. Daube, and S.C. Wofsy (1996), "Measurements of carbon sequestration by long-term eddy covariance: methods and a critical evaluation of accuracy", *Global Change Biology,* **2**, 169–182.

Hernandez, P.A., J.M. Salazar, Y. Shimoike, T. Mori, K. Notsu, and N. Perez (2001), "Diffuse emission of CO_2 from Miyakejima volcano, Japan", *Chemical Geology,* **177**, 175-185.

Klusman, R.W., J.N. Moore, and M.P. LeRoy (2000) "Potential for surface gas flux measurements in exploration and surface evaluation of geothermal resources", *Geothermics*, **29**, 637-670.

Koepenick, K.W., S.L. Brantley, J.M. Thompson, G.L. Rowe, A.A. Nyblade, and C. Moshy (1996), "Volatile emissions from the crater and flank of Oldoinyo Lengai volcano, Tanzania", *Journal of Geophysical Research,,* **101**, 13,819-13,830.

Lewicki, J.L. and C.M. Oldenburg (2004), "Strategies for detecting hidden geothermal systems by near-surface gas monitoring", Lawrence Berkeley National Laboratory Report *LBNL-xxxx*.

Lewicki, J.L., C. Connor, K. St-Amand (2003), J. Stix, and W. Spinner, "Self-potential, soil CO_2 flux, and temperature on Masaya volcano, Nicaragua", *Geophysical Research Letters,* **30**, 1817.

Oldenburg, C.M., and A.J.A. Unger (2004), "Coupled vadose zone and atmospheric surface-layer transport of CO_2 from geologic carbon sequestration seepage simulation", *Vadose Zone Journal*, **3**, 848–857.

Pruess, K., C. Oldenburg, and G. Moridis (1999), "TOUGH2 User's Guide Version 2.0", Lawrence Berkeley National Laboratory Report *LBNL-43134*.

Sorey, M.L., W.C. Evans, B.M. Kennedy, C.D. Farrar, L.J. Hainsworth, and B. Hausback (1998), "Carbon dioxide and helium emissions from a reservoir of magmatic gas beneath Mammoth Mountain, California", *Journal of Geophysical Research,* **103**, 15,303-15,323.

Werner, C., S.L. Brantley, and K. Boomer (2000), "CO_2 emissions related to the Yellowstone volcanic system 2. Statistical sampling, total degassing, and transport mechanisms", *Journal of Geophysical Research,* **105**, 10,831-10,846.

Williams-Jones, G., J. Stix, M. Heiligmann, A. Charland, B. Sherwood Lollar, N. Arner, G. Garzon, V.J. Barquero, and E. Fernandez (2000), "A model of diffuse degassing at three subduction-related volcanoes", *Bulletin of Volcanology*, **62**, 130-142.

Wood, W.W. and M.J. Petraitis (1984), "Origin and distribution of carbon dioxide in the unsaturated zone of the southern high plains of Texas", *Water Resources Research,* **20**, 1193–1208.

Wood, B.D., C.K. Keller, and D.L. Johnstone (1993), "In situ measurement of microbial activity and contrals on microbial CO_2 production in the unsaturated zone", *Water Resources Research,* **29**, 647–659.

ACKNOWLEDGEMENTS

This work was supported by the Assistant Secretary for Energy Efficiency and Renewable Energy, Office of Geothermal Technologies, of the U.S. Department of Energy, and by the Office of Science, U.S. Department of Energy, under Contract No. DE-AC03-76SF00098. We thank C. Doughty (LBNL) and M. Lippmann (LBNL) for constructive review of this paper.