INVESTIGATIONS, EXPERIMENTS, AND IMPLICATIONS FOR USING EXISTING PULSE MAGNETS FOR "TOPOFF" OPERATION AT THE ADVANCED LIGHT SOURCE*

Authors Gregory D. Stover, Kenneth Michael Baptiste, Walter Barry, William Gath, James Julian, Slawomir Kwiatkowski, Soren Prestemon, Ross Schlueter, Derek Shuman, Christoph Steier (LBNL, Berkeley, California)

Abstract

ALS top-off mode of operation will require injection of the electron beam from the Booster Ring into the Storage Ring at the full ALS energy level of 1.9 GeV. Currently the Booster delivers a beam at 1.5GeV to the Storage Ring where it is then ramped to the full energy and stored for the user operation. The higher Booster beam energy will require the pulse magnets in the Booster and Storage Rings to operate at proportionally higher magnetic gap fields. Our group studied and tested the possible design and installation modifications required to operate the magnets and drivers at "top-off" levels. Our results and experiments show that with minor electrical modifications all the existing pulse magnet systems can be used at the higher energy levels, and the increased operational stresses should have a negligible impact on magnet reliability. Furthermore, simple electrical modifications to the storage ring thick septum will greatly reduce the present level of septum stray leakage fields into the storage ring beam.

Pulse magnet systems at the ALS

Extraction from the booster ring into the storage ring is achieved by energizing a combination of slow bumps, fast kickers, and an extraction pair of thin and thick septa magnets in the booster ring (BR) as shown on Fig. 1. Simultaneously in the injection region a mirror pair of septa magnets and a quad group of fast bumps are energized in the storage ring (SR).

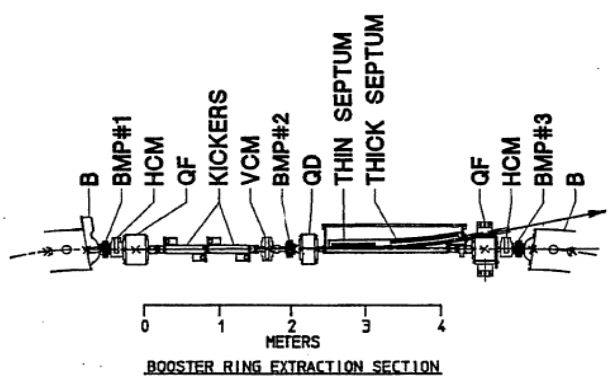

Fig. 1

The extraction/injection magnets are nominally used to fill the storage ring at a 1 Hz rate with three bunches spaced 8 ns apart during each booster ramping cycle.

The nominal injection energy is 1.525 Gev. During the normal injection process the magnets are operated continuously at a 1 Hz pulse rate until the storage ring has been refilled from a nominal base level (200 ma) to a peak current of 400 ma. Depending on the injection rate (0.7 to 0.8 ma/shot) the process takes about six minutes or 360 shots to refill the storage ring. In the top-off mode magnets will be driven at 27% higher fields to accommodate the full injection energy of 1.9 GeV and will pulsed once every 20 sec, continuously. The ALS storage ring is capable operating up to 2.0 GeV. All the pulse magnet systems were tested to and beyond this level to confirm their capability and reliability.

Booster Bumps magnets

The extraction of the booster beam is initiated by a full-sinusoidal excitation (T_{per} = 20ms) of three corrector bump magnets in the booster. The magnets produce a local closed orbit distortion in the extraction area of the Booster Ring. At the peak of the excitation the fast kicker magnets are energized and 'kick' the beam across the thin septum into the transfer line leading to the storage ring. The bump magnets have laminated steel cores with a window frame design. Inspection of old engineering notes and theoretical calculations[1] re-confirmed that these magnets had originally been designed for 10 Hz operation and a special energy scanning mode that would allow peak field levels to reach top-off energy levels. Fortunately the pulse drivers had also been designed to allow the magnets to reach these higher levels.

All three magnets were driven to 32% higher currents and compared with highest B field measured with a gaussmeter[2] installed in the gap of the central magnet. Peak drive currents were measured with a Pearson current probe. B fields for 1.9 GeV operation were reached with sufficient voltage and current headroom using the existing drivers. The B vs. I transfer function was very linear up to and past the 1.9 GeV field levels. Calculations showed that conversion to water cooling at 1.9 GeV operation was not necessary. A 61% increase in magnet power is offset by a much lower max repetition rate of .05 Hz that results in a factor of 20 decrease in magnet power dissipation[1].

Fast kicker system

Beam is extracted from the booster by four Thyratron triggered, charge line type, kicker power supplies that discharge a square pulse (T_{per} = 150ns) of current into four single turn window frame magnets in the booster

*Work supported by the Director, Office of Science, Office of Basic Energy Sciences, of the U.S. Department of Energy under Contract No. DE-AC03-76SF00098.

ring. Our investigations addressed a number of questions. Could the very mechanically complex Balun coupling transformer survive 1.9 GeV operation (17KV) pulse service? Could the existing CX1157[3] thyratron and its high voltage structure operate at 17kVDC? Could the various subsystem components (charge line cables, etc.) stand the higher DC operating voltages? Would the magnet cores saturate?

Magnet core flux densities at 1.95 Gev were modeled with 2D simulation software[4]. As shown in Fig 2 the flux density in the corners of the ferrite core reaches a maximum value of 2400 G which is well below the saturation value (3200 G) for CMD 5005[5] ferrite.

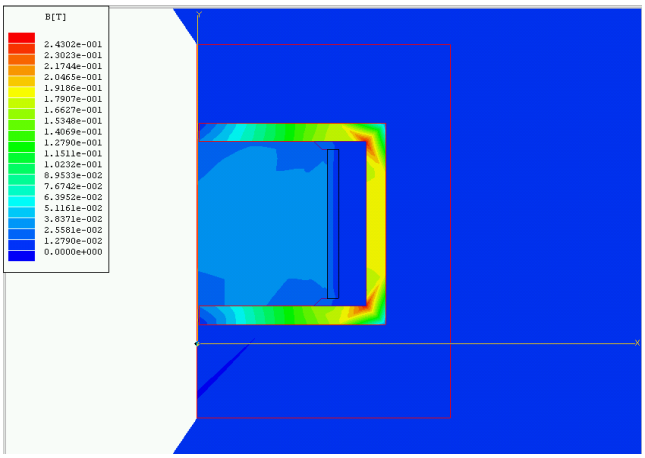

Fig. 2

HFSS Half magnet simulation of B field @ 1.9 GeV

A test stand with a complete charge-line kicker driver and magnet assembly was constructed and tested from 5 to 17 KVDC (+5% over 1.9 GeV energy levels). No sign of core saturation was noticed over the entire voltage range. Some component breakdowns occurred (reversing diode, peaking capacitor, and thyratron tube housing) but were corrected.

The system was operated at 17KVDC for 30 days at a 10 Hz rate or ~ 26 x 10^6 shots. This is 2.36 times the number of shots expected for 10 years of operation in the top off mode. All the subsystem components including the Balun coupling transformer showed no signs of degradation.

Septa studies and results

The thick septum magnet, named for its thicker septum plate, gives a 10.0 deg bend, and the thin septum gives a 2.0-degree bend. Both magnets are iron dominated, with C-shaped cores forming the main magnetic gap. The drive coil is wound around the back leg of the core. The thick septum has a laminated steel core (M-19, .0.35mm) which can pass a higher peak B field but requires a longer period (100us half sine) discharge pulse, and the thin septum has a ferrite core which can pass a lower peak field, but employs a shorter (20us half sine) pulse. Both magnets employ copper eddy current septa. The fast rise and fall of the thick septum main gap field generates sufficiently high longitudinal eddy currents that cancel a majority of the fringe field that would otherwise penetrate through to the storage ring. The eddy current shielding allows the circulating beam to be positioned much closer to the septum plate. We addressed the questions of: What modifications to the septa magnets and drivers are required to operate at 1.9 GeV top-off mode? Are there any changes to the electrical or magnetic topology that can minimize storage beam instability during top-off operations? And finally, what are magnitudes of the increased stresses and can estimates for the life expectancy for the septa magnet systems be predicted?

Thick and thin septum magnetic measurements

2D simulations of the magnet core and gap flux densities, septum shield return currents and leakage fields through the septum plate were modeled with simulation software[6] for both magnets. A more complete discussion of these simulations can be found in the conceptual Design report[7] and an associated PAC paper.[8] The results of these simulations were compared with actual magnetic measurements made on magnet spares retrieved from ALS storage and upgraded to full 'ready spare' status for this project. An SR ring beam tube was located and fastened to the gap face of the thin septum magnet. Both magnets were mounted on a granite table and were driven to 2.0 GeV field levels (1.32T (thick) 0.45T (thin)) by a new high voltage pulse driver that was constructed to both magnets and also as a 'plug & play' spares for the existing septa magnets.

B field measurements were made using several sizes of B dot loop feeding either a simple RC integrator or a digital scope with mathematic integration function. The fields were calibrated to +/- 1% using a Helmholtz coil and Hall probe[9]. All the measurements agreed quite closely with theoretical results. Most significantly the change in the slope of B vs. I efficiency function up to 1.32 Tesla (+2% over nominal) for the thick septum was less than < 1% indicating very little saturation in the core. Field quality and leakage field measurements correlated well with the theoretical models.[8]

In addition to the nominal 27% field increase required for both magnets the SR thin septum magnet is presently driven beyond its nominal design value by an additional 22% during normal injection operation. The reasons for the overdrive condition are not understood at this time but will be investigated in the coming year. Necessarily the thin septum magnet was tested to field values of +55%. the change in the slope of B vs. I efficiency function up to 0.453 Tesla (+2% over original design value) for the thick septum was -7.6% indicating incipient saturation in the core. Field quality and leakage field measurements correlated well with the theoretical models.[8]

Saturation in both magnets is minor and from our theoretical model will have little or no effect on the field uniformity in their respective gaps.

Reduction of thick septum leakage field

Previous injection studies have shown horizontal and vertical orbit shift in the stored beam during the injection process. This effect only occurs when the thick septum magnet is firing. It had been surmised that a slowly decaying leakage field was penetrating through the eddy current 'thick' septum. The thin septum leakage field is smaller and is further attenuated by an additional iron plating inside the beam tube only the length of the thin septum magnet and has little effect on the beam. More importantly it was reported[10] and in personal discussions[11] that changing the excitation current waveform from a half to a full sinusoidal ring would dramatically reduce the leakage fields through the septa plate. Our theoretical model and magnetic measurements[8] confirmed these effects.

To test these predictions the existing pulse driver for SR thick septum was reconfigured to produce a full sine drive current pulse and the effect on the stored beam was measured. As shown in Fig. 3 the leakage field at the circulating beam location employing the 'full sine' excitation was reduced by factor of 10 and allowed the ALS to meet the requirements for top off operation.

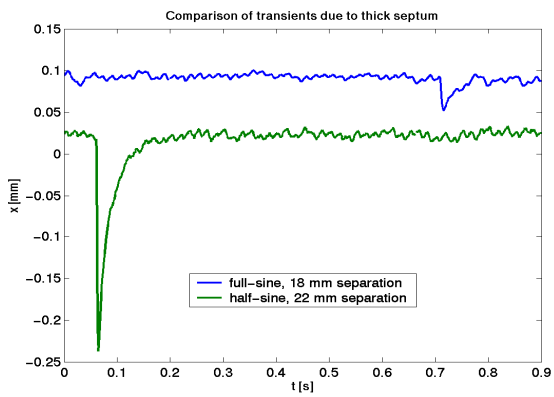

Fig. 3,

Transients for full (blue) and half (green) wave sinusoidal excitation. Note: **Acquisition of data for two curves is not synchronized. Peaks are coincident with each other.

SUMMARY AND FUTURE PLANS

Our measurement results have shown that for 1.9 GeV operation the booster ring bumps reach the specified B fields with sufficient headroom. Conversion to water-cooling is not necessary.

Modeling and calculations have shown that the existing magnets in the Booster fast extraction kicker are quite adequate for 1.9 GeV. Additionally the kicker magnet drivers can be easily modified to operate at the higher voltage level in very reliable manner.

Theoretical and empirical results indicate that the existing BR/SR thick and thin septa will have the desired field quality for operation at 1.9 GeV. Modification of the SR thick septum driver to a 'full ring' mode will bring the amplitude of the septum leakage field within acceptable limits. Estimates of possible failure modes caused by the increased operational stresses suggest that the probability of a magnet failure is negligible. To mitigate the stresses we plan to add water or air-cooling to both magnets. From the results of our testing we have two 'ready spare' magnets that will be life tested, and a spare pulse driver. Combined with a well-defined magnet swap-out procedure we hope to cover the most likely failure contingencies. Further investigations of the thin septum overdrive condition will be made in the coming fiscal year.

Acknowledgements

I would like thank, Jim Dougherty, Max Vinco, and Tony Sippio for the very tireless efforts in helping Derek Shuman setup the septa magnet test stand.

REFERENCES

[1] G. Stover "Comparison of Booster ring Bump magnet: B field measurements vs. calculations @ 1.522 and 2.0 Gev." ALS Top-Off Project Note 04/19/2000.

[2] YR100-3-2 Gauss meter/sensor model from GMW associates, San Carlos, Ca. 94070.

[3] CX1157 Hydrogen filled thyratron manf. by E2V Technologies.

[4] HFSS EM simulation software produced by ANSOFT Corp.

[5] CMD5005, A high permeability NiZn ferrite with high resistivity. Manufactured By National Magnetics Gp.

[6] OPERA-2d is a two dimensional software package for modeling Cartesian and axi-symmetric electromagnetic field problems. Produced by Vector Fields.

[7] LBNL/PUB-5506, "Conceptual Design Report of the Top-Off Upgrade of the Advanced Light Source at Lawrence Berkeley National Laboratory", Berkeley, December 23, 2004

[8] D. Shuman, W. Barry, S. Prestemon, R. Schlueter, D. C. Steier, G. Stover, "Stray Field Reduction of Eddy Current Septum Magnets", PAC2005, May 16 – 19.

[9] YM12-2-2-0.5T-50Khz Sensis single axis magnetic field transducer, 1% accuracy from GMW associates, San Carlos, Ca. 94070.

[10] Jan Borburgh, CERN, PS division "Eddy current MgneticSepta". http://psdata.web.cern.ch/psdata/www/septa/xsmeddy.htm

[11] Glen Lambertson, Center for Beam Physics, LBNL