LBNL-62458

The Effect of Magnetic Field on HTS Leads What Happens when the Power Fails at RAL?

Michael A. Green
Lawrence Berkeley National Laboratory
Berkeley CA 94720, USA

14 February 2007*

Abstract

The key to being able to operate the MICE superconducting solenoids on small coolers is the use of high temperature superconducting (HTS) leads between the first stage of the cooler and the magnet, which operates at around 4.2 K. Because MICE magnets are not shielded, all of the MICE magnets have a stray magnetic field in the region where the coolers and the HTS leads are located. The behavior of the HTS leads in a magnetic field depends strongly on the HTS material used for the leads and the temperature of the cooler first stage temperature. The HTS leads can be specified to operate at the maximum current for the magnet. This report shows how the HTS leads can be specified for use the MICE magnets. MICE magnets take from 1.3 hours (the tracker solenoids) to 3.7 hours (the coupling magnet) to charge to the highest projected operating currents. If the power fails, the cooler and the upper ends of the HTS leads warm up. The question is how one can discharge the magnet to protect the HTS leads without quenching the MICE magnets. This report describes a method that one can use to protect the HTS leads in the event of a power failure at the Rutherford Appleton Laboratory (RAL).

TABLE OF CONTENTS

	Page
Abstract	1.
Introduction	2.
MICE Magnet Characteristics and their Charging Circuits	3.
The Affect of Magnetic Field at the HTS Leads in MICE Magnet Modules	6.
Is LN_2 Cooling Needed to Protect the HTS leads During a Power Outage?	10.
Some Concluding Comments	11.
Acknowledgements	12.
References	12.

* Last revision 14 February 2007

Introduction

When MICE was conceived is the fall of 2001, it was decided that the superconducting magnets and the liquid absorbers would be run off of a central helium plant [1]. When the infrastructure costs were calculated in early 2004, it was clear that the use of central helium plant that would cool both the magnets and the absorbers would cost of the order of £2 million. As a result, a serious study of cooling both the magnets and the absorbers with small coolers was undertaken. The study came to the conclusion that the MICE magnets and the absorbers could be cooled for less than £700 thousand. The results of the cooler study were published in two MICE notes in the fall of 2004 [2] and [3]. These results are reflected in the MICE technical design report (the MICE TRD), which first came out in the fall 2004 [4].

Since the MICE magnets are cooled using one or more 4.2 K coolers, the magnets must be powered using conduction cooled copper leads from room temperature 300 K to the cooler first stage temperature (about 55 K). Between the cooler first stage temperature and the magnet, the magnet leads must be made from an HTS material. The performance of HTS leads is affected by the magnetic field on the leads and the lead temperature. The really critical part of the lead is the high temperature end of the lead.

This report shows how the magnets are connected to the power supplies [5]. For example, the three AFC solenoids will be connected in series. Each coupling solenoid will have its own power supply. The corresponding coil circuits for the tracker magnets M1 (match coil 1), M2 (match coil 2) and S (the spectrometer solenoid that consists of two end coils and a long central solenoid) will be in series with the coil circuits of the other tracker solenoid. The lone exception is the tuning power supplies for end coils on the tracker. Each tracker solenoid will have separate tuning power supplies. The arrangement of the power supplies will determine the charge and discharge properties of the MICE magnets.

This report will show the location of the coolers with respect to the magnet cold mass for the AFC solenoid. The cooler location with respect to the coupling solenoid and the tracker solenoid is similar to the cooler position with respect to the AFC magnets.

The magnetic and temperature properties of two types of HTS leads will be discussed. The best of the HTS leads will use oriented strands of BSSCO-2223 magnet wire that has two favorable field orientations. Thus the HTS leads can be oriented so that an unfavorable field direction is not seen by the leads in any given magnet.

From the lead study it is clear that the field at the high temperature end of the HTS lead determines both the lead selection and its response to a change in the lead upper end temperature.

The final topic of this report is how one can protect the HTS leads from burning out when they go normal. As a matter of the magnet design, the voltage drop along the length of the HTS lead is measured. If the voltage drop along one or both magnet leads is too high, the magnet is quenched to protect the lead from burning out. It is clear that one does not want to protect the leads by quenching the magnet very often. The time to recover from a MICE magnet quench is quite long. Something as simple as a power failure that causes the cooler to shut off can cause the upper end of the HTS lead to overheat. If the magnet can be discharged rapidly enough without quenching, the lead is protected even when there is a power failure at RAL.

MICE Magnet Characteristics and their Charging Circuits

The MICE channel has three types of magnets; 1) the focusing magnets that produce the magnetic field in the absorbers within the absorber focus coil module (AFC module), 2) the coupling magnets that generate the magnetic field for the RF coupling coil module (RFCC module), and 3) the tracker solenoids that generate the uniform and matching fields within the tracker module. The MICE superconducting magnet channel consists of three AFC modules; there are two RFCC modules; and there are two tracker modules.

a) Characteristics of the AFC module Magnets

Each AFC module magnet consists of two coils. The two coils are either connected in series at the same polarity to form a relatively uniform solenoid field (the non-flip mode) or they are connected at opposite polarity to form a cusp shaped field (the flip mode). Table 1 shows the parameters of the focusing magnet in the worst-case field and current in both the non-flip mode and the flip mode. The charging voltage and charge time is set by the fact that the three AFC magnets are in series. (See Figure 1.)

Table 1. The Basic Operating Parameters for the MICE Focusing Solenoid

Parameter	Non-flip	Flip
Number of Coils per Magnet	2	
Coil Inner Radius (mm)	263	
Coil Thickness (mm)	84	
No. of Layers	76	
No. Turns per Layer	127	
Magnet J (A mm^{-2})*	72.0	138.2
Magnet Current (A)*	130.5	250.7
Magnet Self Inductance (H)	137.4	98.6
Peak Induction in Coil (T)*	5.04	7.67
Magnet Stored Energy (MJ)*	1.17	3.10
Magnet Charging Voltage (V)	3.0	3.0
Magnet Charging Time (s)	5980	8240
4.2 K Temp. Margin (K)*	~2.0	~0.6
Inter-coil Z Force (MN)*	0.56	3.53

* Worst case currents based on p = 240 MeV/c and β = 420 mm

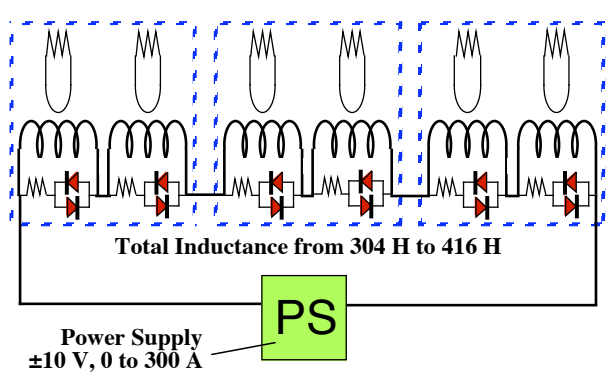

Figure 1. The AFC Magnet Hookup showing the Three Magnets in Series

b) Characteristics of the Coupling Magnets

Each coupling magnet consists of a single coil. Table 2 shows the parameters of the coupling magnet in the worst-case field and current for when MICE is operated in the non-flip mode and the flip mode. The charging voltage and charge time is set by the fact that there is only one coupling magnet per power supply. Figure 2 shows a single coupling magnet per power supply. The coupling magnet shown in Figure 2 is shown sub-divided into four parts using diodes and shunt resistors. The most likely division for the coupling magnet is into either six or eight parts.

Table 2. The Basic Operating Parameters for the MICE Coupling Magnet

Parameter	Non-flip	Flip
Number of Coils per Magnet	1	
Coil Inner Radius (mm)	731	
Coil Thickness (mm)	102.5	
Coil Length (mm)	285	
No. of Layers	96	
No. Turns per Layer	170	
Magnet J (A mm^{-2})*	108.1	114.6
Magnet Current (A)*	193.6	205.2
Magnet Self Inductance (H)	608	608
Peak Induction in Coil (T)*	7.02	7.44
Magnet Stored Energy (MJ)*	11.4	12.8
Magnet Charging Voltage (V)	9.0	9.0
Magnet Charging Time (s)	13080	13450
4.2 K Temp. Margin (K)*	~0.9	~0.8

* Worst case currents based on p = 240 MeV/c and β = 420 mm

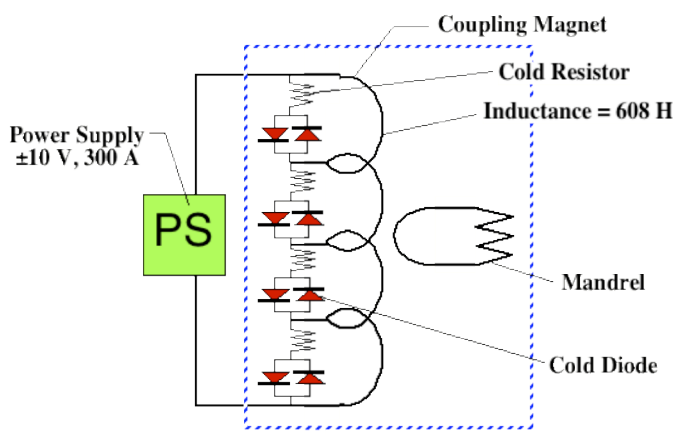

Figure 2. The Coupling Magnet Hookup showing a Single Magnet per Power Supply

c) Characteristics of the Tracker Magnets

Each tracker magnet consists of a five coils. The tracker magnet is divided into three sections. There is a three-coil spectrometer solenoid (two short end coils and a long center coil) that generates a uniform field of 4.0 T to better than 0.3 percent over a length of 1000 mm and a diameter of 300 mm, There are two matching coils M1 and M2 that match the uniform field section of the tracker solenoid to the rest of MICE.

There are three primary circuits that form the tracker magnet, the two matching coils and the spectrometer solenoid. The two end coils have small power supplies across them to fine-tune the uniform field section where the scintillating fiber tracker is located. Table 3 shows the parameters of the three primary tracker coils in the worst-case field and current for the tracker magnet. The charging voltage and charge time is set by the fact that there are two match coils M1 in series, two match coils M2 in series and two spectrometer solenoid that are in series Figure 3 shows the power supply circuit for the two tracker solenoids. The quench protection diodes and resistors are shown for the tracker magnet in Figure 3. Each of the five coils has its own diode and resistor pack, except the long center coil, which has a two diode and resistor packs for quench protection.

Table 3. The Basic Operating Parameters for the Three Main MICE Tracker Magnet Sections

Parameter	Coil M1	Coil M2	Spectrometer
Coil Inner Radius (mm)	258	258	258
Maximum Coil Thickness (mm)	46.2	30.8	68.2
Coil Section Length (mm)	198	197	1611
No. of Turns per Coil Section	5040	3332	23468
Magnet J (A mm^{-2})*	142.9	152.6	153.4
Magnet Current (A)*	253.8	273.6	269.9
Magnet Self Inductance (H)	13.0	5.4	77.0
Peak Induction in Coil (T)*	5.30	4.32	5.86
Magnet Stored Energy (MJ)*	0.42	0.20	2.80
Magnet Charging Voltage (V)	4.5	4.5	4.5
Magnet Charging Time (s)	734	329	4620
4.2 K Temp. Margin (K)*	~1.7	~1.9	~1.5

* Worst case currents based on p = 240 MeV/c and β = 420 mm in the flip mode

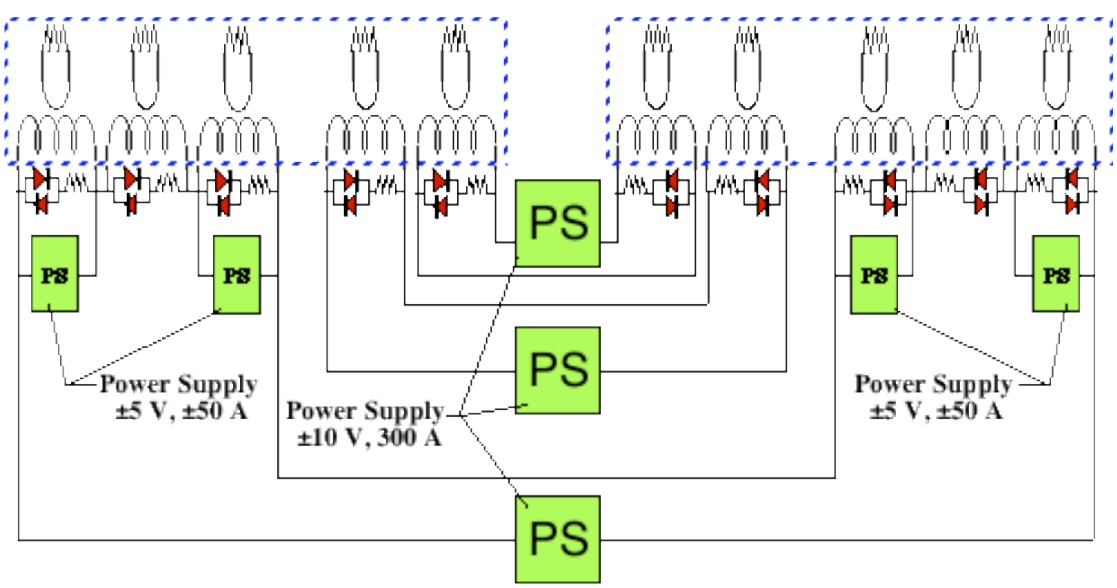

Figure 3. The Power Supply Hook-up for the Two Tracker Magnets

The Affect of Magnetic Field at the HTS Leads in MICE Magnet Modules

The position of the coolers will probably be determined by the position of the HTS leads. The position of the HTS leads will ultimately be determined by the magnetic field seen by the HTS leads. Figure 4 shows a desirable position for the magnet coolers, the magnet leads and the magnet shields with respect to the magnet cold mass of the AFC module [6]. The coolers for the other modules are in a similar position with respect to the magnet cold mass. The position of the first stage of the cooler is determined by the magnetic field at the top end HTS leads, which operate at a temperature a degree or two above the cooler first stage temperature.

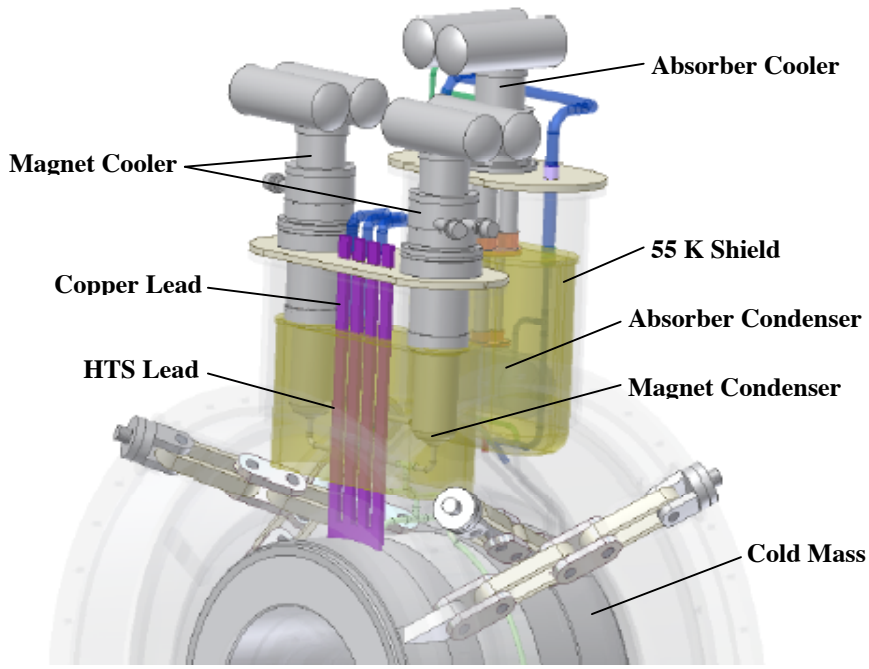

Figure 4. The Position of the Magnet Coolers, the Magnet Leads and the Magnet Shields with Respect to the AFC Magnet Cold Mass and the Cold Mass Supports

There are two general types of HTS leads that one can be used for superconducting magnets. The first type of lead is a solid piece of bulk HTS material. This type of lead has been used on magnets for the LHC, because these leads don't see any magnetic field except the self-field from the leads themselves. The upper ends of these leads are cooled by the 20 K circuit from the LHC refrigerator. When the LHC refrigerator stops operating, the upper end cooling stops and so do the magnets. These leads work well on circuits where the magnet can be discharged quickly.

The second type of lead is made an oriented piece of HTS material such as the first generation BSSCO-2212 magnet conductor. This type of HTS material has two preferred field directions where the lead can still be superconducting at a higher current. Having two preferred directions means that the lead can be oriented so that the field is always in the preferred direction (particularly with a solenoid magnet). This type of a lead can work in the magnetic field generated from the magnet being powered, such as the MICE magnets. The MICE tracker and coupling magnets will use this type of HTS lead.

The position of the magnet leads with respect to the cold mass is determined by worst-case magnetic field at the upper end of the HTS leads. The most likely candidates for HTS leads for use with the AFC module and the other MICE modules are the leads from HTS-110 in New Zealand. The leads are made from first generation American Superconductor multifilament BSSCO conductor that was designed fro use in HTS magnets. The performance of the HTS leads is both a function of the magnetic field and the lead temperature. The magnetic field and temperature at the warm end of the HTS lead determines its performance within the AFC magnet. The design condition for an HTS-110 lead is an upper end temperature of 64 K in no magnetic field. The lead upper end temperature for the MICE magnets may be as low as 50 K as seen in Table 4.

Table 4. The Cooling Parameters and Worst Case Magnetic Field at the First-stage of the Magnet Coolers for the Three Types of MICE Solenoid Magnets,

Parameter	Type of MICE Magnet		
	Focusing	**Coupling**	**Tracker**
Number of Cooler per Magnet	2	1	2
Design 1st Stage Heat Load (W)	70	56	109
1st Stage T at Design Load (K)	~40	~53	~53
Design 2nd Stage Heat Load (W)	2.0	1.3	2.31
2nd Stage T at Design Load (K)	~3.8	~4.0	~3.9
Cooler 1st Stage Radius (mm)	~900	~1100	~900
Maximum B at the 1st Stage* (T)	~0.35	~0.4	~0.05
Magnetic Field Direction*	radial	axial	axial
Magnet Maximum Current* (A)	250.7	205.2	~285
Design Upper End T (K)	55	60	60
Design Lead Current @ 64 K (A)	500	500	500
Design Induction at Upper End (T)	0.4	0.5	0.1
Maximum Upper End T (K)	77	77	77
Magnet Charging Time* (s)	8240	13860	4620

* Worst case currents based on p = 240 MeV/c and β = 420 mm in the flip mode

Table 4 shows the worst-case design conditions for the three types of MICE magnets from a HTS lead standpoint. In general the worst-case condition occur when MICE is operating at an average momentum of 240 MeV/c in the flip mode. The magnets and their leads are designed to run under the worst-case condition. If the magnets are fabricated properly, the first stage temperatures should be in the range from 40 K to 53 K. The coupling magnet is designed to operate with a single cooler. However, space will be provided for a second cooler. The tracker solenoid is being built with two coolers. If needed a third cooler can be added. The additional coolers on both the coupling and tracker solenoid will reduce the first stage temperature considerably. The design temperature for the upper ends of the leads is set at 55 to 60 K. As a matter of design selection, the size of the lead is set by the design current at 64 K. The tracker magnet will use commercial HTS-110 lead, which use an oriented magnet conductor with two favorable field direction along the leads. The favorable field directions are parallel to the flat face of the conductor. It is clear from Figure 5 that the HTS-110 leads have two favorable and one unfavorable direction [7].

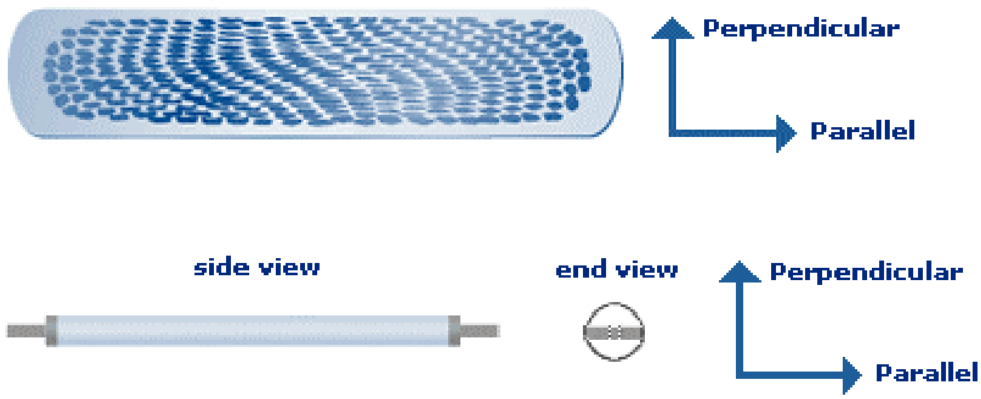

Figure 5. The Favorable and Unfavorable Field Directions for the HTS-110 Leads [7]

The upper part of Figure 5 shows the American Superconductor BSSCO conductor that is the heart of the lead. As long as the field is parallel to the flat face of the conductor, one will get the conductor to operate at the highest critical current for a given field and temperature. From Figure 5 one can see that the favorable directions are along the length of the HTS-110 lead and along the flat face of the conductor when the field is perpendicular to the direction of current flow in the lead. Because the HTS-110 leads are designed so that one knows where the flat face of the conductor is, one can position the HTS leads so that one always can have the field from the MICE magnets running in the favorable direction with respect to the leads. The self-field from current flowing in the lead will have a component that flows in a direction perpendicular to the flat face of the lead. The worst-case self field from the MICE leads is less than 0.03 T. Thus self-field, even at the lead conductor edge is not an important design factor at 300 A.

Figure 6 shows the performance factors for the HTS-110 leads. The performance factor of 1 means that the lead will carry the same current as the lead is designed to carry at 64 K with no magnetic field on the lead. A performance factor of 0.5 means that the lead will carry half of its design current at 64 K and zero field.

From Figure 6, it is clear that the lower the HTS lead temperature the better. It is also clear that limiting the magnet on the lead is desirable. A field that is perpendicular to the lead flat face is much worse than a magnet field that is parallel to the flat face. Since the lead has two of the three directions that put the field in a favorable orientation with respect to the flat face. Since the AFC magnet is axial symmetric, it is clear that the flat face of the conductor must be oriented so that the azimuthal field (the θ component) is perpendicular to the flat face. The upper end of the HTS lead when the cooler with well situated should be at a radius of 800 to 900 mm from the AFC magnet axis. The magnetic field at the upper in of the leads is expected to be in the range of 0.45 to 0.55 T.

If one looks at Figure 6, on can see that at a field of 0.55 T, the lead performance factor will be 0.75 at 64 K and 0.47 at 70 K. This suggests that the AFC magnet lead design current can be as low as 500 A. If one wants additional margin or the ability to increase the upper end temperature to 75 K, one would use 1000 A standard leads for the AFC magnet. The price the one pays for using larger leads is increased the heat leak into the second stage of the cooler. The heat leak down the leads, with the upper lead

temperature at 64 K is as follows: 90 mW for a pair of standard 250 A leads, 130 mW for a pair of standard 500 A leads, and 250 mW for a pair of standard 1000 A leads. With a proper magnet design the field perpendicular to the flat face shouldn't be a problem. The tracker solenoid will use 500 A standard leads for the 300 A maximum current leads and 100 A standard leads for the 50 A maximum current leads.

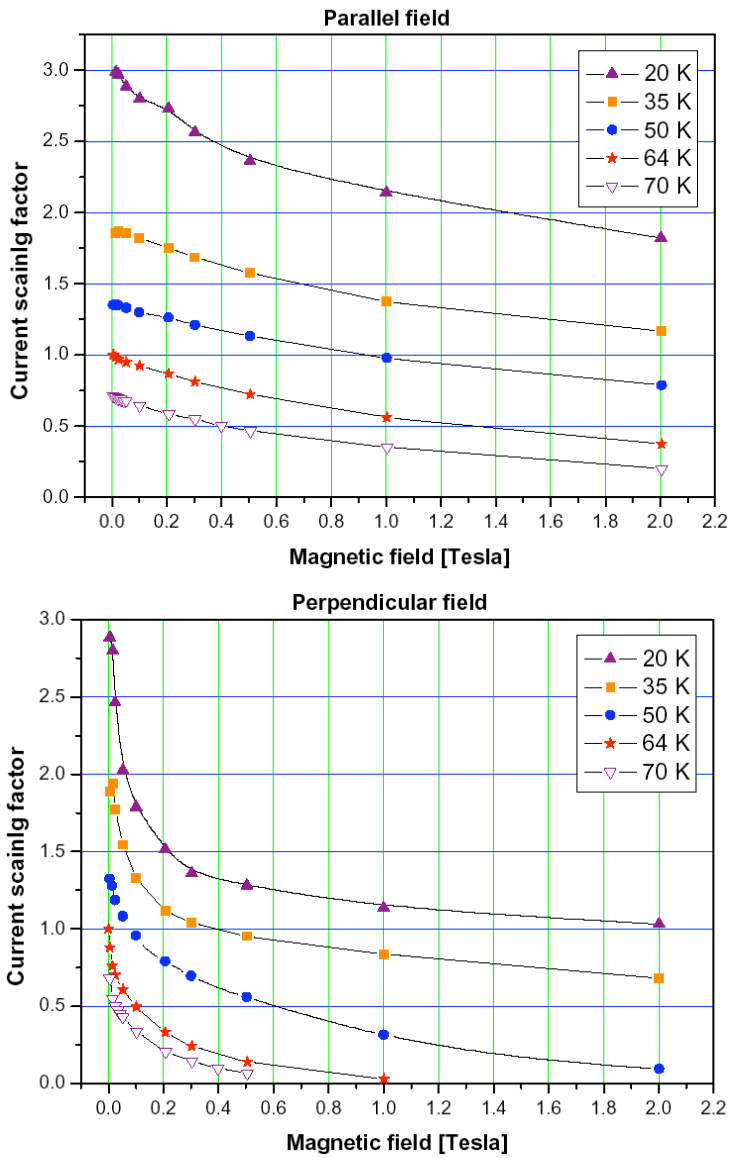

Figure 6. The Lead Performance Factor for the HTS-110 Leads as a Function of the Lead Temperature and Magnetic Field for Field Parallel and Perpendicular to the Flat Face of the Leads [7].

When one looks at Figure 6, it is clear that one must worry about the temperature of the upper end of the HTS leads. One must look at the circumstances that might limit the performance of the leads during normal MICE operation. There are two instances that one might have to worry about the HTS leads. They are a failure of a cooler, and a general power outage at RAL that would affect MICE. A cooler failure is a rare occurrence. A power outage at RAL may not be very rare.

Is LN_2 Cooling Needed to Protect the HTS leads During a Power Outage?

From the previous section of this report, it is clear that keeping the upper end of the HTS leads at the proper temperature is a must. If the upper end of the HTS leads goes to a high temperature, thermal runaway of the HTS leads can occur. If the thermal run away is sudden, the current from the magnet and its leads must be removed rapidly. The means that the magnet must be quenched to protect the HTS leads. In general, the HTS-110 leads can go above 80 to 85 K before sudden thermal runaway occurs [8].

If a simple power outage occurs, the magnet remains cold, because there is a volume of liquid helium around the coils. This means that the magnet can be discharged without quenching. In this scenario, one wants to provide extra cooling to the top of the HTS leads, because the cooler is no longer able to provide the cooling to the leads. The extra cooling is to prevent the HTS leads from going normal and running away when the cooler is no longer able to provide because of the power outage. There are a couple of ways of providing this extra cooling: 1) Intercept the heat flow down the leads from room temperature with a volume of liquid (or solid) nitrogen held in reserve to prevent the leads from running away and quenching. 2) Have enough solid thermal mass in contact with the leads to prevent them from getting too hot while discharging the magnet.

It is clear that a small amount of liquid (or solid nitrogen) in direct contact with the cooler first stage is sufficient to provide the thermal mass needed to keep the upper part of the HTS leads cold enough during a magnet discharge. If one uses the sensible heat plus the heat of fusion of nitrogen from 55 K to 70 K, the total enthalpy available for upper lead cooling is 68000 J per kg of solid nitrogen [9]. If the heat of vaporization is used as well the total available enthalpy increases to 288000 J per kg [9]. Table 5 shows the an estimate of the amount of solid nitrogen needed to keep the upper part of the HTS leads cold enough to avoid burnout, while discharging the MICE magnets at the same rate they are charged.

Table 5. The Use of Solid Nitrogen to Prevent the Upper End of the HTS Leads Cold

Parameter	AFC	RFCC	M1 Coil	M2 Coil	Tracker
Magnet Charge Time (s)	8240	13340	780	780	4620
Magnet Charging Voltage (V)	3.0	9.0	4.5	4.5	4.5
Heat Flow through Copper Leads (W)	54	27	27	27	33
Heat to the Solid Nitrogen (kJ)	445	360	21	21	152
Nitrogen ΔH from 55 K to 70 K (J g^{-1})	68	68	68	68	68
Mass of Solid Nitrogen Needed (kg)	6.54	5.29	2.85		

From Table 1, it is clear that less than 8 liters of solid nitrogen at 55 K is needed to protect the HTS leads from burnout during a power failure even when the magnet discharges at the same rate that it charges. The heat of vaporization of the nitrogen can be used to keep the shields cold so the liquid helium boil off is minimized while the power is off at RAL. The problem with having a nitrogen reservoir is the extra cost involved in putting such a reservoir into the magnet cryostat. Hence there is the desire to use and approach that does not involve liquid or solid nitrogen.

Table 6 shows the amount of copper at the temperature of the cooler first stage needed to keep the HTS leads cold enough during a rapid discharge.

Table 6. The Use of Copper to Prevent the Upper End of the HTS Leads Cold during a Fast Discharge

Parameter	AFC	Coupling	M1	M2	Tracker
Magnet Self Inductance (H)	98.6	563	13.0	5.4	~77.0
Number of Magnet Turns	19304	15704	5040	3332	23606
Magnet Charge Time (s)	8240	13340	900	900	4620
Magnet Charging Voltage (V)	3.0	9.0	4.5	4.5	4.5
Coupling Coefficient to Mandrel	0.8	0.9	0.8	0.82	0.85
Charging Heat Load (W)	0.024	0.028	0.40	0.16	0.046
Rapid Discharge Mandrel Heat Load (W)	3.0	0.42	1.0		
Time for a Rapid Discharge (s)	2120	3430	1190		
Magnet Fast Discharge Voltage (V)	11.67	35	3.4	3.4	17.5
Number of Quench Diode Packs	2	6 to 8	1	1	2
Discharge Voltage per Diode Pack (V)	5.83	4.4 to 5.8	3.4	3.4	8.75
Heat Flow through Copper Leads (W)	54	27	27	27	33
Heat to the Copper (kJ)	112	91.2	32.1	32.1	39.3
Copper ΔH from 55 K to 75 K (J g^{-1})	3.5	2.5	3.5	3.5	3.5
Mass of Copper Needed (kg)	31.8	36.5	29.6		

From Table 6, it is clear that a block of copper (or aluminum) connected to the first stage of the cooler can be used to ensure that the HTS lead don't burn out during a rapid discharge of the magnet. The rapid discharge of the magnet will not cause the magnets to quench, as long there is liquid helium around the magnet coils. The recommended amount of copper connected to the first stage of the magnet coolers is as follows: 1) for the AFC magnets ~40 kg, 2) for the coupling magnets ~50 kg, and 3) for the tracker magnets ~40 kg. The amount of copper connected to the first stage of the cooler may have to be increased if the copper leads run at higher current densities. If one replaces the copper heat sink attached to the shield with an aluminum heat sink mass will be reduced about 35 percent [9]. The cost of the aluminum heat sink will also be lower.

Some Concluding Comments

HTS leads are an important part of the charging circuit for all of the superconducting magnets for MICE. The HTS leads are essential to the operation of any magnet that operates on a cooler. Lead overheating during a fault is an important consideration. MICE magnets take a long time to charge (over 13300 seconds for the coupling coils) and discharge. If there is a fault that can cause the HTS leads to burn out, the MICE magnets much quench. Recovery from a MICE magnet quench takes some time (of the order of 1 day). One wants to avoid quenching the MICE magnets unnecessarily.

The HTS leads that will be used on the tracker and coupling solenoids are leads made from a HTS conductor that was designed for making a HTS superconducting magnet. The leads made by HTS-110 are well suited for use in a magnetic field as long as that magnetic field is not above 0.5 T. The HTS-110 leads and other leads of this type have two favorable field directions in the lead conductor. This means that the leads can always be oriented so that the stray field from the magnets is in a favorable direction.

The leads that will be used on the MICE tracker and coupling coils are designed for operation at zero-field at a temperature of 64 K. When the field goes up the lead operating current must come down. When the lead temperature goes up the operating current of the lead must come down. The key temperature is the temperature at the upper end of the lead. The key magnetic field is also at the upper end of the lead as well. Thus, the performance of the MICE magnet leads is determined by the upper end temperature.

We have two choices: 1) Buy leads that are designed for higher current (1000 A instead of 500 A). We may choose to buy larger leads particularly for the AFC and coupling coils even though the heat leak to 4 K is larger. 2) Make sure that the upper end of the leads does not get to hot by providing some enthalpy at the upper ends of the leads. The latter is particularly important when there is a power failure. During this scenario, the magnet still has current in it, because the discharge time constant is long but there is no cooling from the cooler at the lead upper end.

Three methods for controlling the lead upper end temperature were explored; 1) Use solid nitrogen to cool the upper end of the lead while the magnet is discharged at the same rate it was charged. 2) Use extra copper or aluminum in the shields to provide a thermal mass so that the magnet can be charged rapidly without a quench. 3) Quench the magnet at the point where the lead resistance gets too high. If power outages are rare, the last method may well be the simplest and least expensive method.

Acknowledgements

This work was supported by the Office of Science, United States Department of Energy, under DOE contract DE-AC02-05CH11231. DOE funding for the US Neutrino Factory and Muon Collider Collaboration is also gratefully acknowledged.

References

[1] "A Proposal to the Rutherford Appleton Laboratory, an International Muon Ionization Cooling Experiment (MICE)," proposed by the MICE Collaboration, 15 December 2002

[2] M. A. Green, “Cooling the MICE Magnets using Small Cryogenic Coolers,” Oxford University MICE Note 109, 10 September 2004

[3] M. A. Green, “Cooling the MICE Liquid Hydrogen Absorbers using Small Cryogenic Coolers,” MICE Note 108, 3 September 2004.

[4] G. Gregoire, G. Ryckewaert, L. Chevalier, et al, “MICE and International Muon Ionization Cooling Experiment Technical Reference Document,”(October 2004).

[5] M. A. Green and H. Witte, “Quench Protection and Power Supply Requirements for the MICE Focusing and Coupling Magnets,” MICE Note 114, 8 June 2005, LBNL-57580.

[6] S. Q. Yang, private Communication concerning AFC Module drawing (2006).

[7] HTS-110 web brochure concerning their line of standard HTS current leads (2006).

[8] Jon Zbasnik of LBNL, private communication concerning the testing of BSSCO-2223 leads that are similar to the HTS-110 for run away at high temperatures (1999).

[9] Victor J. Johnson Ed., *A Compendium of the Properties of Materials at Cryogenic Temperature*, Pergamon Press, New York (1961).

DISCLAIMER

This document was prepared as an account of work sponsored by the United States Government. While this document is believed to contain correct information, neither the United States Government nor any agency thereof, nor The Regents of the University of California, nor any of their employees, makes any warranty, express or implied, or assumes any legal responsibility for the accuracy, completeness, or usefulness of any information, apparatus, product, or process disclosed, or represents that its use would not infringe privately owned rights. Reference herein to any specific commercial product, process, or service by its trade name, trademark, manufacturer, or otherwise, does not necessarily constitute or imply its endorsement, recommendation, or favoring by the United States Government or any agency thereof, or The Regents of the University of California. The views and opinions of authors expressed herein do not necessarily state or reflect those of the United States Government or any agency thereof, or The Regents of the University of California.

LBNL-62459

The Effect of Magnetic Field on HTS Leads What Happens when the Power Fails at RAL?

Michael A. Green
Lawrence Berkeley National Laboratory
Berkeley CA 94720, USA

14 February 2007

* This work was supported by the Lawrence Berkeley Laboratory and the Office of Science, U.S. Department of Energy under Contract No. DE-AC02-05CH11231