DISCLAIMER

This document was prepared as an account of work sponsored by the United States Government. While this document is believed to contain correct information, neither the United States Government nor any agency thereof, nor the Regents of the University of California, nor any of their employees, makes any warranty, express or implied, or assumes any legal responsibility for the accuracy, completeness, or usefulness of any information, apparatus, product, or process disclosed, or represents that its use would not infringe privately owned rights. Reference herein to any specific commercial product, process, or service by its trade name, trademark, manufacturer, or otherwise, does not necessarily constitute or imply its endorsement, recommendation, or favoring by the United States Government or any agency thereof, or the Regents of the University of California. The views and opinions of authors expressed herein do not necessarily state or reflect those of the United States Government or any agency thereof or the Regents of the University of California.

UC-405

APRIL
1990

COMPUTING NEWSLETTER

ICS CUTOVER APRIL 6

SUN SOFTWARE MANAGEMENT

OBJECT ORIENTED PROGRAMMING

JETSET ON CSA AND UNIX

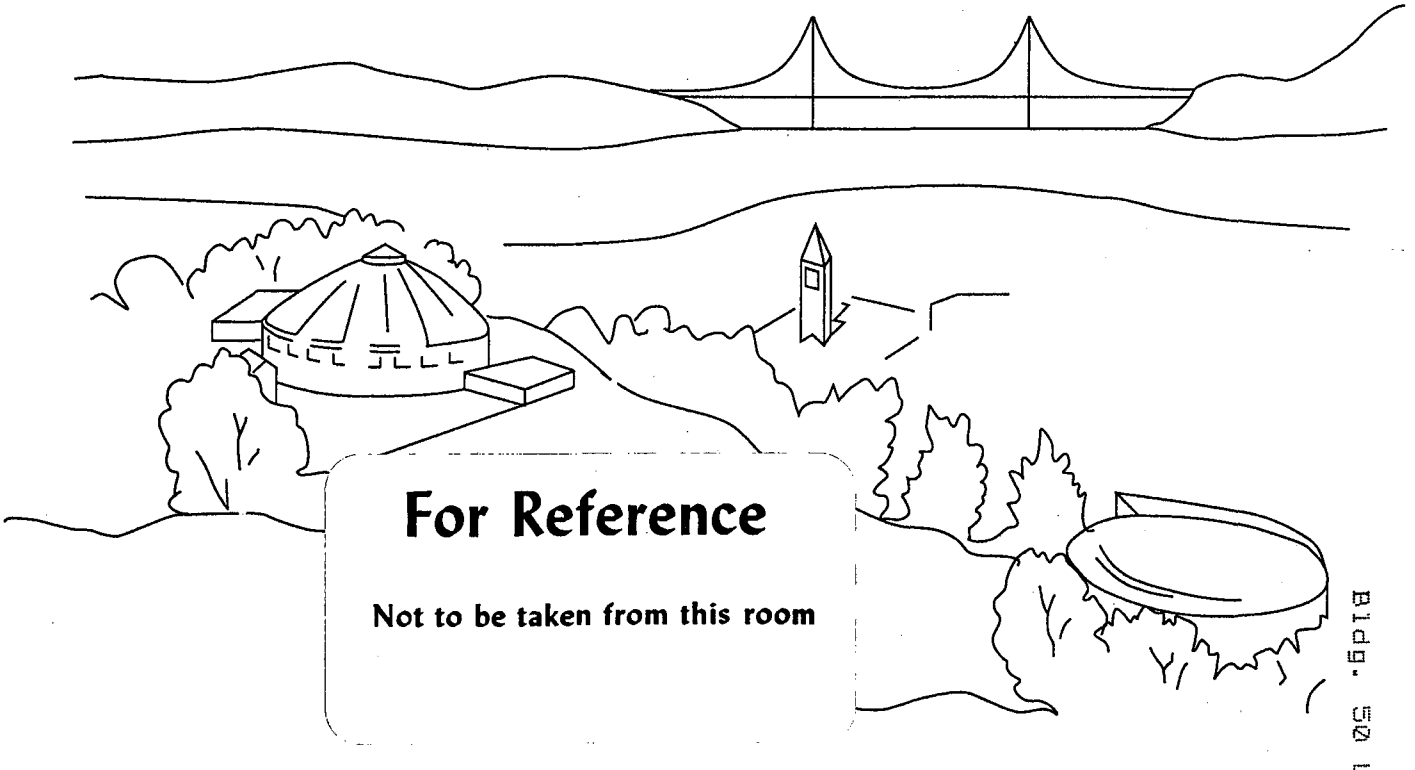

For Reference

Not to be taken from this room

LAWRENCE BERKELEY LABORATORY
BERKELEY, CALIFORNIA . . . 94720

Bldg. 50 Library.
Copy 1
PUB-429

This document was prepared as an account of work sponsored by the United States Government. Neither the United States Government nor any agency thereof, nor The Regents of the University of California, nor any of their employees, makes any warranty, express or implied, or assumes any legal liability or responsibility for the accuracy, completeness, or usefulness of any information, apparatus, product, or process disclosed, or represents that its use would not infringe privately owned rights. Reference herein to any specific commercial products process, or service by its trade name, trademark, manufacturer, or otherwise, does not necessarily constitute or imply its endorsement, recommendation, or favoring by the United States Government or any agency thereof, or The Regents of the University of California. The views and opinions of authors expressed herein do not necessarily state or reflect those of the United States Government or any agency thereof or The Regents of the University of California and shall not be used for advertising or product endorsement purposes.

Newsletter Closing Date is Monday, April 16, 1990

Address all communications for the Newsletter to login nooz@ux1.lbl.gov
or put in Maggie Morley's Drop Box in the Workstation Group File Server

Editor: Maggie Morley

Prepared for the U.S. Department of Energy under Contract DE-AC03-76SF00098

Lawrence Berkeley Laboratory is an Equal Opportunity Employer

PUB 429 4/90 2100

TABLE OF CONTENTS

GRAPHICS NEWS
QMS Color LaserWriter Lore 4
GENERAL NEWS
IMSL Libraries' New Interactive Documentation Facility 5
New Version of NAG on CSA 5
Fortran-LINT Upgrade on CSA3 6
LaTeX Calendar Generator on Unix and CSA 6
ICS Notes 8
Sun Software Support 8
NEWS OF PHYSICS LIBRARIES 11
LBLNET NEWS 14
LBLnet Activity Map - February 1990 16
THE WORKSTATION SCENE 17
Schedules for Computer Classes 24
NAMES & NUMBERS TO KNOW 27

GRAPHICS NEWS

QMS COLOR LASERWRITER LORE

Bill Benson

A QMS ColorScript 100 color PostScript printer, as announced in the March Newsletter, is up and running in Bldg. 50B, Rm. 1275. It can be accessed from the AppleTalk and Distributed Printing systems.

GENERAL INFORMATION

The imageable area is somewhat smaller than that of a regular laser printer, and it may **not** be centered on the page. For both 8 1/2" x 11" and 11" x 17" pages, the margins required (in portrait orientation) are 0.8" at the top, 1.3" at the bottom, and approximately 0.2" at the left and right. The ColorScript has limits to the size of an image placed on the page because it needs to grip the page securely, maintaining exact registration, as it rolls the paper back and forth for up to four passes.

Tray Size-Media Combinations

At present, there are four combinations of tray size and media:

letter	**paper**
letter	**transparency**
tabloid	**paper**
tabloid	**transparency**

The ColorScript will normally be loaded with letter size paper. You can call x6211 during regular working hours to request a different combination.

Caveat

Since we presently have only one color PostScript printer and it can only handle one paper size at a time, you might not always get the paper size or media you expected. If paper size is important, check first before running your print job.

VMS/UNIX USERS

To access it from Unix and VMS machines, type:

lpr -Pqp2 <name of your PostScript file>

MAC USERS

Remember, if you are a Macintosh user, you need the **Laserwriter 6.0 distribution** (LaserWriter 6.0, LaserPrep 6.0, and Print Monitor 1.3) to get output in color from the ColorScript. This distribution is available in the Graphics folder on the WKSG Server 1 in the lbl zone (copy it to your System Folder, replacing the previous versions).

Get it from the Graphics Folder!

It is important to get Laserwriter 6.0 from the Graphics folder (rather than from the Apple color disk) because this version includes four additional page sizes which match the imageable area the printer can achieve. Although four page sizes can be specified — letter 8 1/2" x 11"), tabloid (11" x 17"), A3, and A4 — we have trays only for the first two.

When you use the QMS printer, you should make sure that **all** Mac users on the same LocalTalk network have the same versions of LaserWriter, LaserPrep and PrintMonitor. This will prevent thrashing, i.e., annoying 3-minute delays while your local printer is re-initialized.

For most applications, specify the desired page size by selecting the "Page Setup..." menu under the File menu. Press the "Tabloid" popup menu for additional sizes. Select:

Colorscript 100 US letter (for 8 1/2" x 11")
or
Colorscript 100 tabloid (for 11" x 17")

You can, as an alternative, use the public domain application **MyPageSetup** (in the Graphics folder) to set (or inspect) these and other printer defaults.

Forward comments and questions to me at x5703 or

Unix or
Software Tools Mail: **WHBenson@lbl.gov**

VMS Mail: **lbl::WHBenson**

GENERAL NEWS

IMSL LIBRARIES' NEW INTERACTIVE DOCUMENTATION FACILITY

Marty Gelbaum

The Interactive Documentation Facility for the IMSL Libraries is available for use on the CSA cluster. The IMSL libraries are a collection of Fortran-callable mathematical, statistical, and special function subprograms. This facility has two main purposes:

1. To help you **identify** IMSL routines via
   - routine name, if known
   - any associated keyword(s) (such as "eigenvalues", or "regress")
   - the GAMS classification (a classification scheme for mathematical routines)
   - a succession of menus
2. To help you **use** routines by
   - providing access to most of the information in the IMSL User's Manual
   - helping to find related functions and subprograms
   - making a sample FORTRAN program (easily), using the routine of interest

This facility, which is oriented toward FORTRAN programming, helps you find and use the IMSL routine that best suits your programming needs. The system can

✔ help you search for a mathematical, statistical, or special function routine you need for a certain task,
✔ show some or all of the relevant documentation, and even
✔ create a sample program using the routine.

The vendor is currently letting us try the facility without cost; LBL will have to pay for the product if we decide to keep it. Therefore, we need your input! Please send us your comments on its value.

Usage:
You need to run this DCL command procedure BEFORE using the facility:

$ @sys_utilities:setup_imsl_idf.com

Then, start up the IMSL Libraries Interactive Documentation Facility with this command:

imsl_idf

The facility has two internal interfaces: the MENU and COMMAND interfaces.

The **MENU** interface uses a simple menu to look up relevant routines. After finding the routine that seems most promising, you can "change the information selected" to include a sample program. You may then create a file containing the sample program by sending this information to a file. The output part of the file has "C" in column one of the output, so the file, which is a FORTRAN source file, can be compiled, linked with IMSL, and executed.

In the **COMMAND** interface, use the command (for example)

TY/EX/OUTPUT=EVCRG.FOR EVCRG

to write the example program for EVCRG to the file EVCRG.FOR.

Other COMMAND interface actions:

SEARCH EIGENVALUES
(search for routines with REGRESS as a keyword)

TYPE EVCRG
(type information for the routine EVCRG)

There is internal HELP for the program, accessed by typing "**?**" in the MENU interface and by typing "**HELP**" in the COMMAND interface.

NEW VERSION OF NAG ON CSA

Marty Gelbaum

On March 6, 1990, we installed a new version (Mark 13) of the NAG double precision library of mathematical, statistical, and special function Fortran subprograms on CSA. Generally, this new version is downwardly compatible with the old version (Mark 12).

In the Mark 12 documentation, routines to be withdrawn from the library were listed, and directions for replacing them with better routines (in the Mark 13 version) were given. (One user was particularly pleased by the replacement of E04CGF with E04JAF, which he felt was a much better routine).

The LINK statement is the same as with Mark 12:

LINK object-file, sys_nagd/lib

You can access the old version (Mark 12) by typing

LINK object-file, old_nagd/lib

The old version will be removed within the next six months. Programs already linked with this old version WILL continue to run, barring truly unusual circumstances.

Forward comments and questions to me at x4749 or

Unix or
Software Tools Mail: **martyg@lbl.gov**
VMS Mail: **lbl::martyg**

FORTRAN-LINT UPGRADE ON CSA3

Marty Gelbaum

FORTRAN-lint has been upgraded to Version 2.61 (from Version 2.58). FORTRAN-lint is a FORTRAN source code analyzer - available ONLY on CSA3 - that is designed to simplify the debugging of FORTRAN programs. The program was recoded in C and reworked to run much faster. Version 2.61 includes support for records and structures in FORTRAN and some minor bug fixes.

For more information on how to use FORTRAN-lint, see the online HELP article FLINT and the FORTRAN-lint User's Manual, available at the Help Desk, 50B/1215, and the Computer Center library, 50B/1232, x7008.

LATEX CALENDAR GENERATOR ON UX1/3/5 AND CSA

Marty Gelbaum

LXCAL, a program to produce a monthly calendar in LaTeX, is now available on UX1/3/5 and CSA. LXCAL is in the normal search path on UX1/3/5. To use LXCAL on CSA, you need to define a "foreign symbol", as follows:

lxcal :== $TEX_DISK:[tex.local.lxcal]lxcal

This is a public-domain program, written by

B. Narasimhan
Dept. of Statistics
Florida State University
Tallahassee, Florida 32306.
E-mail: naras@stat.fsu.edu

The author states categorically, "No claim whatsoever is made regarding this code or the calendar-design. Note that no error checking is done. Comments, suggestions and reports regarding bugs [to the e-mail address shown above] are welcome."

Although a few bug fixes were done here at LBL, we offer no guarantee of support or upgrade. Local tests after installation of the bug fixes were successful. The program takes an input file, a sample of which is provided below, and generates a LaTeX output file. The user then processes this file through LaTeX and prints the resultant DVI file on a local laser printer. Thus, the usage goes like this:

lxcal input_file cal.tex
latex cal.tex
lpr -Pap4 -d -L cal.dvi

The calendar will then be printed on the ap4 LaserWriter. The "-L" flag is needed to make the file print out in "landscape" mode, that is, with the print running left to right along the 11" dimension of the paper; the calendar fits neatly on 8.5" x 11" paper.

Sample input (for calendar for April, 1990)

——————— CUT HERE ———————

```
1990 4
4
 \begin{itemize}
   \item Oral Presentation. \\
   \item 6:30pm Night class.
 \end{itemize}
%
17
 \begin{itemize}
   \item Mom's Birthday. \\
   \item 10:00am Dentist Appointment.
 \end{itemize}
%
23
 \begin{itemize}
   \item Group meeting. \\
   \item Trial run of new system.
 \end{itemize}
%
```

You MUST end the input file with "%"; LXCAL won't run successfully if you don't.

Forward comments and questions to me at x4749 or

Unix or
Software Tools Mail: **martyg@lbl.gov**
VMS Mail: **lbl::martyg**

APRIL 1990

Sunday	Monday	Tuesday	Wednesday	Thursday	Friday	Saturday
1	2	3	4 • Oral Presentation. • 6:30pm Night class.	5	6	7
8	9	10	11	12	13	14
15	16	17 • Mom's Birthday. • 10:00am Dentist Appointment.	18	19	20	21
22	23 • Group meeting. • Trial run of new system.	24	25	26	27	28
29	30				MARCH 1990 S M T W T F S 1 2 3 4 5 6 7 8 9 10 11 12 13 14 15 16 17 18 19 20 21 22 23 24 25 26 27 28 29 30 31	MAY 1990 S M T W T F S 1 2 3 4 5 6 7 8 9 10 11 12 13 14 15 16 17 18 19 20 21 22 23 24 25 26 27 28 29 30 31

ICS NOTES

Maggie Morley

Logging In Through ICS
Full cutover of telephone, dataswitching and voice mail service to ICS is to be completed by April 6.

At that time, the Asynchronous Data Interface (ADI-100) —a small beige brick-shaped box with a black front — will replace all Gandalf/Develcon dataswitching services. Develcon users must move their cables from the blue Develcon box to the ICS ADI-100. Users with Macintosh terminals will need a new cable; call ICS Service Center (x7997) and they'll send one.

Logging in to the Cluster
Here's how to log in to the Cluster machines with the ICS box (what you type is in **bold face**):

Hit **<Shift> <Break> or <Shift> <Enter>**
It responds:
ENTER - DIRECTORY (D), NETWORK (N), OUTSIDE (O), OR TERMINAL TYPE CHANGE (T) >
Hit **d <RETURN>**
It responds:
ENTER DESTINATION NUMBER >
Type **CSA <RETURN>**
It responds:
DATA CALL INITIATED:
Type **<RETURN>** again

- If you are directly connected from ICS to CSA, you'll get a login prompt ("CSA1>").
- If you are connected through a terminal server, you'll need to type **<RETURN>** one or more times until you get the login prompt

ICS and Dial up Modems
The new dial-up numbers are

Number	Incoming Baud Rate	Connect Baud Rate
486-7930	3/12/2400 Baud	3/12/2400 Baud
486-7900	3/12/2400 Baud	9600 Baud
486-7996	9600 Baud	9600 Baud

Use x7930
If you dial in on (486)-7900 (the "speed conversion") line, to

(a) do file transfer (with Kermit or other protocols), or
(b) manage large volumes of output
(with **<CTRL> S/Q**),

you may run into transfer problems. In those cases, you should use the (486)-7930 ("autospeed") lines,

Forward comments and questions to Paul Murray at x5354 or

VMS Mail: **lbl::PGMurray**
Unix or
Software Tools Mail: **PGMurray@lbl.gov**

SUN SOFTWARE SUPPORT

Jerry Borges

Computing Services is offering to coordinate a program of Laboratory-wide support for Sun software products. The program should save LBL personnel considerable time/expense by eliminating duplicate effort/cost. The more Sun users participate, the greater the general savings. For example, several people have separate Sun Fortran support now; consolidating these (and others) into one Fortran license and multiple rights-to-copy would be cheaper for all users. Update tapes and manuals would be obtained from Sun and made available to users as required.

If you are interested, please fill out this questionnaire and return it to me. I will furnish pricing information once the data is gathered.

Forward comments and questions to me at x5568 or

Unix or
Software Tools Mail: **JTBorges@lbl.gov**
VMS Mail: **lbl::JTBorges**

[1] It will take more than one return to get the CSA prompt if you are connected via a Terminal Server.

Request for Sun Software Support

Machine Contact _____ Machine HostId _____

Mail Stop, Extension _____ Machine Type _____

Account No. _____ CPU Serial No. _____

Machine Name _____ Machine Location _____

Note the software to be supported on your machine.

SunOS

SunOS Source Code

Sun Fortran

Sun Pascal

Sun C++

Sun Common Lisp

SunWrite-Paint-Draw

OpenWindows

SunLink DNI

DOS Windows

PC-NFS

Other _____

Is AnswerLine service required? yes _____ no _____

Signed _____ Division _____

Print Name _____ Date _____

Return to Jerry Borges, Mail Stop 50F

Sun Software Management
ATTN: **Jerry Borges**
MS 50F
LBL

NEWS OF PHYSICS LIBRARIES

Werner Koellner

● **PHYSICS UTILITIES**
You can access the Physics Utilities, including the CERN Library, the PAW (Physics Analysis Workstation) Library, and the various Physics Utilities HELP Libraries by executing the DCL command

@Physics$Manager:Setup_Phys

We recommend that you include this line in your Login.Com file.

● **CERN LIBRARIES FOR UNIX SYSTEMS, AND OTHERS**

The discussion of programs and utilities in this section has, until now, dealt with implementations on the VMS Cluster CSA. Work has been in progress to make some CERN libraries available to **Sun** and **Sparc Station** users. During the past month the first CERN package, **JETSET**, has been ported to UX5. See details below. Work continues to make **GEANT, PAW**, and associated codes available on UX5 as well. Similar efforts could possibly be undertaken for installation of these libraries on Silicon Graphics machines. Watch for future announcements.

● **HELP**
When you type

Help @Physics_Utilities

you'll see a list of utilities for which help text is available under "Additional information available." You may also type

Help *'subtopic'*

where *'subtopic'* is one of the utilities listed, to get help directly on a particular utility. You'll find information about some miscellaneous programs by typing

Help Mis_Phys

● **APS_LaTeX**
Submit articles to the PHYSICAL REVIEW in machine readable LaTeX compuscripts by using the APS "compuscript toolbox." Type

Help Mis_Phys Aps_Latex

for more information.

● **APS_WHATS_NEW**
Weekly news capsules, issued by Robert Park, of the American Physical Society, are available in APS_WHATS_NEW. Please type

Help Mis_Phys Aps_Whats_New

for further information.

● **CERN LIBRARY**
Object libraries are updated at unpredictable times. Changes are documented in the "Program Library News" section of the CERN Computer Newsletter. Past, current, and sometimes future issues can be found in **Cern$Inform:PROGLIB.CNLxxx**. Of particular interest are news items regarding the status of obsolete routines. Additional information can be found in various files in **Cern$Inform**, in **Cern$CernHlp**, and via online HELP for selected products. In some cases a previous version of an object library is available as **xxxxx.OLD**.

No new releases have been received this month. Changes or improvements are detailed below.

● **CMZ**
CMZ is an advanced, interactive Source CODE MANAGEMENT System with ZEBRA. It is fast, customizable, self-documenting, machine-independent, and PATCHY-compatible. Its speed is due largely to the storage of source code in Zebra RZ direct access files. Self-documenting means that you can type HELP at any time to get help information. A user manual is available from the Computer Center Librarian. On the CSA Cluster the program can be used by typing

Run Cern$CernExe:CMZ

The program may be ported to Sun machines or other platforms.

● **COMPUTER PHYSICS COMMUNICATIONS**
Computer Physics Communications of Belfast, Northern Ireland, maintains the CPC Program Library, a large collection of Physics-related programs. You can scan the index of programs added since October 1989 by printing the file

Cern$Inform:Cpc_Lib.Index.

● **DISPLAY5**

A new release of DISPLAY5 is now available by typing

Run Display5$Library:Display5

This program accepts histogram and plot input produced by HBOOK4 & HPLOT5 as well as input from the older HBOOK/HPLOT packages. Work to improve the documentation (Display5.Mem or Display5.TeX) is under way.

DISPLAY5 is an interactive program which lets you manipulate and modify histograms and plots, with many options available. Output destined for a number of different devices, including fancy Laserwriter output and output for subsequent processing by the Adobe Illustrator, on MACs can be made. Type

Help Display

for detailed information.

● **GARFIELD**

Garfield is a drift-chamber simulation program that calculates and plots the electrostatic field, the drift-lines of electrons and ions, and the currents on the sense wires resulting from the passage of a charged particle through the chamber. A copy of the User's Manual is available from the Computer Center Librarian, Bldg. 50B., Rm. 1232C, x4242.

The program is now operational using the ATC GKS graphics interface, which allows use of all available terminals and non-interactive devices. The available terminal types can be found in the Grafpak-GKS Workstation Guide. Improvements in the interface routines to GKS may be coming.

An example may be run as follows:

1. Copy **Cern$Library:Garfexam.Inp** to your default directory
2. Type the command

   GARF <cr>

3. At the first Garfield prompt (MAIN:) type

   <garfexam.inp <cr>

The program writes Drift.Log and Gkserror.Log into your default directory.

● **GEANT**

GEANT, a system of detector description and physics simulation tools, is available as part of the CERN Libraries. A new Sample Program, using ATC_GKS to demonstrate graphics and other capabilities, is now available.

Version 3.13/05 is the default version, with recent update modifications made in the Object library. The logical name **Cern$Geant_Lib** points to the appropriate object library file. The recommended link procedure is **Cern$Library:Geant.Lnk** using linker options files **GEANTxy.OPT**, where x is either I or B, and y is either <null> or _ATC, depending on the answers to the questions **Geant.Lnk** asks. The graphics interface for Geant is now GKS, but Geant is also available with the DI3000 graphics interface. To link that version, on CSA2 only, use **@Cern$Library:Geant_Di3000.Lnk.** METAFILE graphics output is available. Please type

Help Geant

for additional information.

● **JETSET72**

On CSA

An updated, debugged version of PYTHIA53 has been obtained and has been incorporated into Cern$Library:Jetset72.Olb. For information about the current versions of Jetset and Pythia, see

Cern$Inform:Jetset72.Doc

The temporary file Jetset72_New.Olb will be removed.

A test program, which also shows the appropriate linker command, can be run by typing

@Cern$Library:Jetset72

You may copy or type this file, Cern$Library:Jetset72.Com, to see what it actually does.

On UX5

Jetset64, a precursor of **Jetset72**, is now available on **UX5**. JETSETxx is a combination of the LUND Monte Carlo programs JETSET and PYTHIA. The program allows Monte Carlo studies of Jet fragmentation and e+e- annihilation (Jetset) and hadron-hadron scattering (Pythia). Documentation is available on CSA in **Cern$Inform:Jetset72.Doc**. To use the program, either add **/usr/lang** to your path, and then add **-ljetset64** to your compile command, or provide the full path in the compile command

/usr/lang/f77 -o program program.f -ljetset64

A sample code, which ran at 1.1 sec/per event on a CRAY machine, performed identically on UX5.

● **PAW**

At LBL, the program PAW is primarily being maintained in the full GKS version, named PAW_ATC, although the mini-GKS version, as well as a DI3000 version, are available. PAW_ATC uses the ATC-GKS interface, whereas PAW_DI3000 uses the Precision-Visuals DI3000 interface, which can be used only on CSA2. Both versions make a large number of output devices, for graphics output, available to the user.

Standard executable programs of PAW_ATC, META-PAW, PAW_DI3000, as well as PAW, are available in **PAW$LIBRARY**. If desired, users may link their own versions by using or modifying the procedures

PAW$LIBRARY:PAW_ATC.LNK or
PAW_DI3000.LNK or
PAW.LNK).

These procedures use corresponding linker options files, e.g. PAW_ATC.OPT. With PAW_ATC, graphics output may be directed simultaneously to the screen or to a Metafile for subsequent processing via the program METAPAW, and also simultaneously, and selectively, to a PostScript file.

Most recent PAW_ATC improvements are documented in files **Cern$Inform:Paw.News***. The latest of these is PAW.NEWS1081. Manuals for PAW, including a fancy new User's Manual, are available from the Computer Center Librarian (Bldg. 50B, Rm. 1232C - x4242). Type

Help Paw

for more information.

● TOPDRAWER

An updated version of TOPDRAWER, with new options, including graphics on VAXstations, has been installed. Work on adapting the new user manual, **Topdrawer$Library:Topdrawer.Doc**, is still in progress. Information on local enhancements can be found by typing

Help Topdrawer

The latest version now works correctly on a VAXstation, with automatic opening of UIS window(s). Implementation for devices with DecWindows is under study. Please type

Help Topdrawer Vax

for details about getting graphics to a hardcopy device, as well as journalling and zooming.

This version also includes a much improved PostScript Driver, as well as a driver producing input for processing the graphics with the Adobe Illustrator on MACs, courtesy of Jack Eastman. Again, HELP TOPDRAWER has the appropriate information in a sub-topic.

Forward comments and questions to me at x4398, or

Software Tools Mail
or Unix: **WOKoellner@lbl.gov**
VMS Mail: **lbl::WOKoellner**

LBLnet NEWS

Bob Fink & Sig Rogers

Buildings Added to LBLnet
Building 25 should be connected to the Routed LBLnet by the time this newletter is published. It will be connected via the *ir4gw* router, and be located in subnet 131.243.96 along with Buildings 5, 7 and 16.

LBLnet Phase II Building Schedule Update
The LBLnet Phase II building attachment schedule is shown below.

If you have further questions about this schedule, please call Bob Fink (x5692), Sig Rogers (x6713), or Ted Sopher (x4559).

Bldg. 1 (Donner)	**operational**	Routed LBLnet
Bldg. 2 (AML)	**operational**	Routed LBLnet
Bldg. 3 (Calvin)	**operational**	Bridged LBLnet
Bldg. 5	**operational**	Routed LBLnet
Bldg. 7	**operational**	Bridged LBLnet
Bldg. 7	**operational**	Routed LBLnet
Bldg. 16	**operational**	Routed LBLnet
Bldg. 25	**operational**	Routed LBLnet
Bldg. 29	**operational**	Bridged LBLnet
Bldg. 62	**operational**	Routed LBLnet
Bldg. 66 (SSCL)	**operational**	Routed LBLnet
Bldg. 69	**operational**	Bridged LBLnet
Bldg. 72 (NCEM)	late May 90	Routed LBLnet
Bldg. 74	**operational**	Routed LBLnet
Bldg. 76	**operational**	Bridged LBLnet
Bldg. 77	**operational**	Routed LBLnet
Bldg. 80	**operational**	Bridged LBLnet
Bldg. 83	**operational**	Routed LBLnet
BARRNet (UCB)	**operational**	UCB, BARRNet & NSFNet access
ESNET	**operational**	MFE & several DOE Decnet sites

Routed LBLnet means Decnet and Internet (tcp/ip) service. XNS, LAVc and other protocols are only supported on the Bridged LBLnet unless their use is entirely local to a subnet of the Routed LBLnet.

Kinetics FastPath Limitation
As we go to press the information we have from Van Jacobson and Craig Leres, the software development folk working on the Kinetics FastPath limitations, is that the new software is almost ready. Hopefully, by the time you read this, the new code for the FastPath will be being installed around LBL.

At the same time the new software is installed, new "bootp" ROMS will be installed in the FastPaths as well. This is the first step in providing more centralized rebooting of FastPaths. This will obviate the need for users to have a copy of the FastPath code of their own for local FastPath restarts.
Eventually, an improved centralized reboot ROM will be installed that completely removes the need for local intervention.

AppleTalk/LocalTalk Networks As Part Of LBLnet
Last month we promised a more detailed discussion of issues regarding modifications to AppleTalk/Local-Talk Networks that are part of LBLnet. Due to time constraints this article has been delayed for at least a month. Stay tuned!

NAT EtherMeter System
A new monitoring and performance measurement system is now being added to LBLnet. This system, manufactured by Network Access Technology, provides low cost and high performance monitoring and measurement of an Ethernet. An "EtherMeter" device is attached to each routed or bridged LBLnet Ethernet. Each EtherMeter is controlled and monitored by a centralized Network Management Station (NMS) located in the Network Management Center (currently Ted Sopher's office).
The EtherMeter provides dynamic measurement of Ethernet utilization, packet-per-second performance, collision and packet error rates, and types of traffic. In addition, traffic statistics can be collected for offline analysis and displays of "top-ten talkers" are provided to help understand dynamic modes of use.
This system will provide an invaluable tool for determining the health of the LBLnet system on a full-time basis. Alarms can be set for various performance thresholds, and individual Ethernets can be selected for graphical analysis at the NMS.
The system will take several months to fully deploy, but will be well worth it.

Network Traffic Data for January 1990
The NAT EtherMeter system being deployed will change the LBLnet traffic data presented each month. Independent of this, the previous network traffic statistics will no longer be available. The reason for this stems from a new version of the Digital Equipment Corp. "RBMS" monitoring and statistics program. The previous version had a special "filter" program, developed locally, that provided the automatic generation of the

network statistics for this newsletter. With the new RBMS format, a new filter would have to be developed, which we judge as not to be worth the effort given the impending installation of the new NAT EtherMeter system.

So, for awhile, statistics for all buildings won't be available, but more types of information will be.

Bridged Backbone Statistics

Statistics for an 8 day interval, 7 Mar - 15 Mar 1990:

Packets/Sec ----428.3 pps Collision rate --------.94%
Broadcasts/Sec. --1.0 pps MultiCasts/Sec --28.4 pps

Packet size as percentage of total packets

64-127 byte packets ----------65.0%
128-255 byte packets ----------17.4%
256-511 byte packets ----------1.0%
512-1023 byte packets ----------7.8%
1024-1518 byte packets ---------8.8%

Packet Type as percentage of total packets

LAVC ---------46.1%
IP----------33.3%
DNA ----------13.7%
LAT ----------4.5%
XNS ----------.6%
ISO----------.3%
ARP ----------.2%

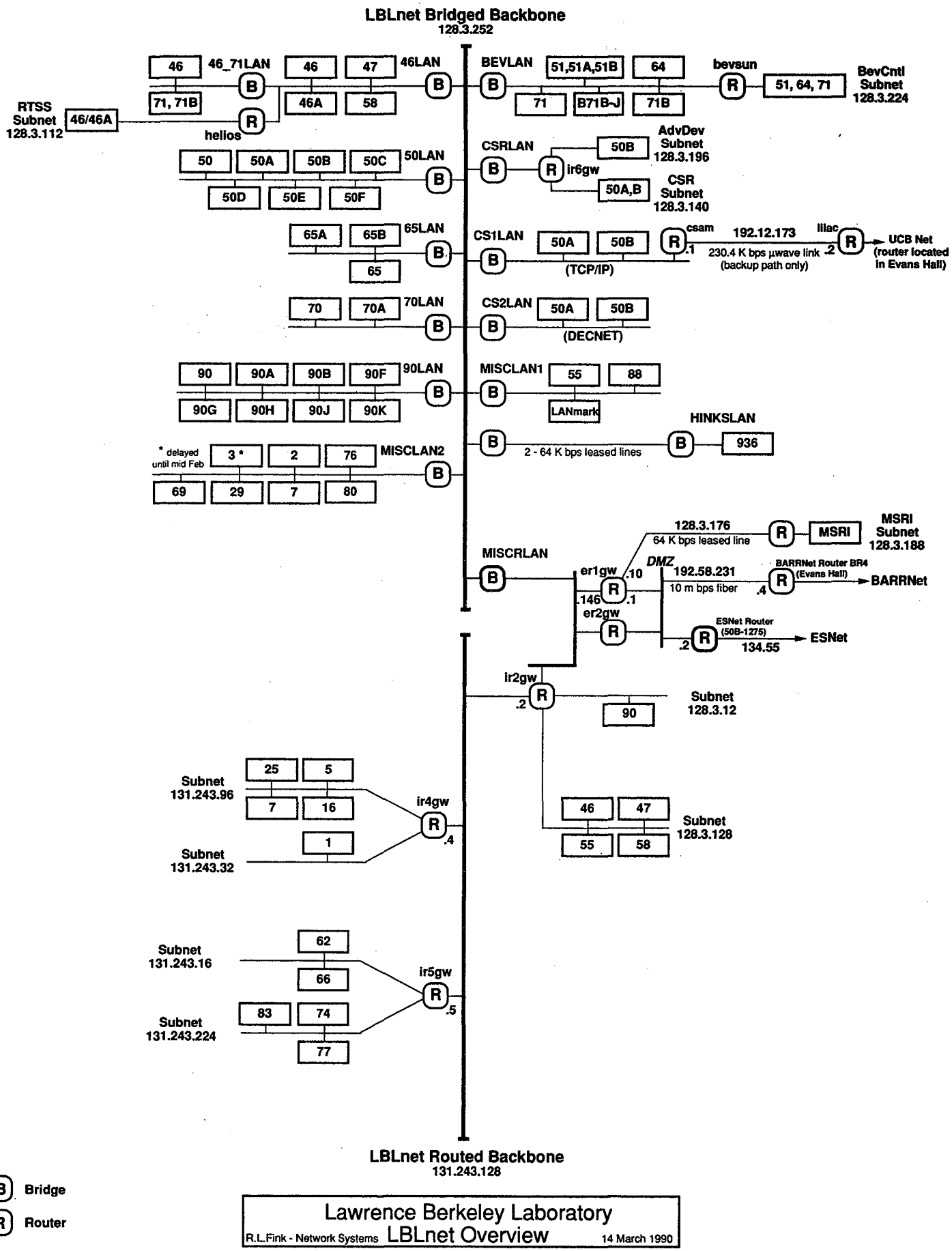
LBLnet Bridged Backbone
128.3.252
46
46_71LAN
46
47
46LAN
71, 71B
46A
58
RTSS
Subnet
128.3.112
46/46A
helios
BEVLAN
51,51A,51B
64
bevsun
51, 64, 71
BevCntl
Subnet
128.3.224
71
B71B-J
71B
CSRLAN
50B
AdvDev
Subnet
128.3.196
ir6gw
50A,B
CSR
Subnet
128.3.140
50
50A
50B
50C
50LAN
50D
50E
50F
65A
65B
65LAN
65
CS1LAN
50A
50B
csam
192.12.173
lilac
UCB Net
(router located
in Evans Hall)
.1
.2
230.4 K bps µwave link
(backup path only)
(TCP/IP)
70
70A
70LAN
CS2LAN
50A
50B
(DECNET)
90
90A
90B
90F
90LAN
90G
90H
90J
90K
MISCLAN1
55
88
LANmark
HINKSLAN
936
2 - 64 K bps leased lines
* delayed
until mid Feb
3 *
2
76
MISCLAN2
69
29
7
80
128.3.176
64 K bps leased line
MSRI
MSRI
Subnet
128.3.188
MISCRLAN
DMZ
er1gw
.10
.146
.1
192.58.231
10 m bps fiber
.4
BARRNet Router BR4
(Evans Hall)
BARRNet
er2gw
ESNet Router
(50B-1275)
.2
134.55
ESNet
ir2gw
.2
Subnet
128.3.12
90
25
5
Subnet
131.243.96
7
16
ir4gw
.4
1
Subnet
131.243.32
46
47
Subnet
128.3.128
55
58
62
Subnet
131.243.16
66
ir5gw
.5
83
74
Subnet
131.243.224
77
LBLnet Routed Backbone
131.243.128
B Bridge
R Router
Lawrence Berkeley Laboratory
R.L.Fink - Network Systems
LBLnet Overview
14 March 1990

THE WORKSTATION SCENE

[27.4.1]

LAB HOURS DURING MAC EXPO

The Workstation lab (Bldg. 50B, Rm. 2231) will close at noon on April 11, 12, & 13. WKSG members will be attending the MacWorld Expo.

[27.4.2]

TRADING POST

Items advertised here are for Laboratory use only and must be purchased with a valid account number. If you have items you wish to advertise in the Trading Post, contact Bruce Burkhart, x6858.

1. For Sale: IBM XT personal computer, 10 MByte Hard Disk, & CGA Color Monitor, $595. Contact: Richard LaPierre, x4692.

2. For Sale: IBM XT personal computer, 10 MByte Hard Disk & Mono Monitor, $549. Contact: Richard LaPierre, x4692.

3 For Sale: Apple 12" Mono Monitor, wo/adaptor card, $119. Contact: Bruce Burkhart, x6858.

4. For Sale: Sun Microsystems Software: *Sun Paint-Write-Draw v1.1*, 1/4" tape, for Sun workstations, $250. Contact Bruce Burkhart, x6858.

5. For Sale: Apple ImageWriter II dot-matrix printer, w/ cable, almost new, 25% off, $312. Contact Shelly Young, x4257.

6. For Free: Two copies of *VolksWriter3* (still in their shrink wraps). Contact Bruce Burkhart, x6858.

7. For Free: *Pascal Workshop* 3.0 software for an Apple Lisa. Brand new; unopened. Contact Jim Haughian, x6162.

[27.4.3]

TIMELY TIP: SPRING AHEAD...

Hey there, PC users: Daylight Savings time is coming. Don't forget to Spring Ahead on Sunday, April 1 (at 2 AM, if you're up).

PC-XT Owners: if you have a standard AST Board, you run the AST-supplied program SETCLOCK.COM as follows (what you type is in boldface):

C> **SETCLOCK <cr>**

It will respond

resident DATE/TIME processor loaded

Current date is 4/02/90
Current time is 02:01:22.07

The Workstation Group Laboratory, home of several Workstation members as well as the *Workstation Evaluation Library* is located in Bldg. 50B, Rm. 2231. The hours are:

Mon	8 AM - 1 PM
	3 PM - 5 PM
Tues - Fri	8 AM - 5 PM

You can also reach us from the Computing Division's Unix machines or the VMS cluster by sending mail to:

Unix or Software Tools	WKSG@lbl.gov
VMS Mail.	lbl::WKSG

We're here to help; please call us at x6858.

Now, issue the following DOS Time command

C> **time <cr>**

It will respond with the current time and prompt you to enter the new time.

Current time is 02:01:22.07
Enter new time: **03:02 <cr>**

While you're in SETCLOCK, you can also change the date, if you so desire. Issue the following DOS Date command

C> **date <cr>**

It responds with a date and prompts you to enter the new date.

Current date is Sunday 04-02-1989
Enter new date: **04-02-1990 <cr>**

PC-AT Owners: If you're using PC-DOS Version 3.3, just use the TIME command. If your PC-DOS is Version 3.2 or earlier, you must run the Setup program to set your clock. The program is on the Diagnostics disk supplied with your system. The disk is usually stored in the read of the Guide to Operations manual.

Note: Network file servers get their time settings from the name server, so there's no need to worry about manual adjustment. You have to run the Setup program to set your clock.

[27.4.4]
MAPLE FOR THE SUN, MAC, PC's

Our thanks to Waterloo Maple for our evaluation copy

✔ ***Maple***, symbolic mathematics application for Macs, 386 PCs (MS DOS) and Unix systems. A single Mac copy costs $395; DOS version is $695; Unix versions range wide (Sparc Station is $895 with discount for multiple copies).

People in the know tell us that *Maple* overcomes some mathematical bugs of *Mathematica*. It is less glitzy than *Mathematica* in the graphics area, but the *Maple* people are working on 3-D plotting now.

The system is set up and ready to go on the Mac in Bldg. 50B, Rm. 2239A. Give it a try.

[27.4.5]
DADiSP FOR THE DEC, SUN, PC's

✔ ***DADiSP*** laboratory information management system. We only have the demonstration package of this product, but it is definitely worth a look-see as an example for experimenters interested in integrating their data collection, processing, and analysis systems.

The demo is set up and ready to go on the Sparc Station in Bldg. 50B, Rm. 2239A.

[27.4.6]
OBJECTWORKS FOR THE SUN, MAC, PCs

✔ ***Objectworks*** for Smalltalk-80, object-oriented program (OOP)[1] learning and development environment. The Workstation Group has the Mac version ($595) but identical systems are available for Unix and IBM 386 machines running MS-DOS (with or without Windows); a version for OS2 is in the works.

Our thanks to ParcPlace for their contribution of our evaluation copy

I have spent maybe thirty hours with *Objectworks* for Smalltalk-80 over the last six weeks, and I must confess that if called upon to write a stand-alone program to print "Hello World", I couldn't do it. Which illustrates one point about object-oriented programming: It's a whole new way of programming and it's not easy to learn. However, if I spend another thirty hours with it, I have no doubt that I could not only program "Hello World" but I could also program a mouse-driven, window-oriented text editor and/or simple drawing program. This is a second important point: OOP delivers tremendous power.

Smalltalk-80 is the grand-daddy of OOPs and is pure OOP, as opposed to hybrid languages, like C++, which allow programmers to mix and match OOP extensions and non-OOP[2] code. The *Objectworks* for Smalltalk-80 development environment is windows-based and mouse-driven; it is neither MAC nor Windows nor Sunview, however, but is an environment that is standard across all those systems. My experience is that it is easy enough to master (the environment, that is) for any windows system user. In addition, applications developed in any system are portable to all Smalltalk-80 systems.

The *Objectworks* development and learning environment includes a Smalltalk application that is the tutorial environment. The on-line tutorial text includes some discussion of what's being done (there is more discussion in printed documentation), but also includes lines of code one executes by choosing "do it" from a pop-up menu. All manner of browsers, explainers, inspectors, transcripts, notifiers, and so forth are available to fully explore the objects being created and used. Executing this canned code lets one do amazing things early on: creating a little drawing window, for example. The tutorial progresses rapidly to doing animations and as a grand finale gives executable code examples of creating browsers and text editing windows. A snapshot can be made at any time to preserve the entire environment.

The tutorial comprises a rich first course, no doubt about it. If I had more time to devote to this project (and I wish I did), I'd go back and re-do the tutorial from the ground up[3]. I needed the first pass to get comfortable

[1] What is object-oriented programming? Beats me! Beats many others, too, because articles about OOP tend more often to describe it than to define it. Imagine a new kind of carpentry where you have nails and screws and thumbtacks. They are objects. They belong to some large category called "fasteners" (a hierarchy) and have some things in common (all made out of metal, for example). The old fashioned carpenter fastens with each of these objects by pounding, pressing, or whatever with the appropriate tool. Now imagine that each object carries with it the instructions for fastening itself and carries with it the tool for doing the fastening. The carpenter only has to know one word: "Fasten". When he tells a nail to fasten, it grabs a hammer and pounds itself in. A thumbtack grabs a thumb and presses itself into the wall. This is silly when applied to carpentry, but when applied to programming it makes more sense. For further information on the concept, try MacWorld of January 1990, Byte of March 1989 and Byte of August 1986.

[2] According to the MacWorld article, mixed coding can introduce complexity, and Apple keeps threatening developers that their products will have to be 100% OOP to work under future Macintosh system software.

[3] And it is from the ground up—the first part of the tutorial is actually executing the code to create the tutorial text browsers—as close as I've ever had to the experience of pulling myself up by my own bootstraps.

with all the resources in the environment. I think I could concentrate more on the concepts with a second go-round. (I would also read all the manuals—they're not long—at least once before starting the tutorial. Again, to gain familiarity with terms and concepts.)

Aside from the tutorial, *Objectworks* includes a great deal. What we're buying here, really, is a bunch of objects, right? The reference manual is nothing but 300+ pages of a single hierarchical list describing basic objects, their categories, dependents, actions, etc. (The information about the date object alone takes four full pages and includes everything you'd ever need to do to a date—figure out leap year, find day of week name, etc. Compare this to the scanty date functions included in most programming languages and you begin to get an idea of what OOP power is.)

If the basic objects aren't enough, *Objectworks* includes object files for creating run-time applications, making screen clocks, doing statistics, handling Unix sockets, working with imaginary and double precision floating point numbers, and "meta-numeric" number classes such as infinity—and many more. These object files are of the sort that anyone can create and share with other Smalltalk users.

I'll close with the hope that LBL programmers who have been curious about OOP but have not yet tried it will stop by and look at our installation of *Objectworks* . While I would not recommend it for many of the small one-time-only programs many of us write, I would recommend it—or at least the concept of OOP—for anyone working on a large project, a group project, and/or a series of projects that require a consistent interface. In addition, it's worth a look for all of us who are interested in getting a better "feel" for how graphical interfaces manage to do their work. At the very least, a couple of hours with *Objectworks* does stretch one's mind.

The system is set up on the Mac in Bldg. 50B, Rm. 2239A.

[27.4.7]

SAS/PC FOR PC'S

✔ *SAS/PC* statistical package is available for LBL staff at a substantial discount from the campus Workstation Software Support Group. Contact G. Scott Morris at 297 Evans Hall for an application form.

[27.4.8]

ABOUT DISKS AND WINDOWS *WORD*

Windows *Word* users: If you got 3.5" disks in an Academic Version package, you can't run the tutorial. The Workstation Group has replacement disks. Bring your originals to the lab.

[27.4.9]

TIMELY TIP: SPRING AHEAD

MAC Users: Daylight Savings time is coming. Don't forget to Spring Ahead on Sunday, April 1 (at 2 AM, if you're up). To set your clock:

(1) Select the Alarm Clock from the Apple Menu.

(2) When the Time Window opens, click on the flag on the right side of the window. That will open Time and Date Set functions.

(3) Click on the Clock (not the Alarm Clock) icon. Select numbers in the hour portion. Type in the new number. Select the numbers in the minutes portion. Type in the new number (if you need to). Select numbers in the seconds portion. Type in the new number (if you're that fussy).

(4) Click on the Clock again.

(5) Close Alarm Clock.

(6) Close.

[27.4.10]

LUNCHTIME WORKSHOPS FOR THE MACINTOSH AND THE PC .

Here is the schedule of the Microsoft *Word*, Basic Mac Classes, Mac Forum, and *FileMaker II* Workshops coming up from April through June. No sign-up is required. All classes will be held from 12 Noon to 1 PM.

Basic Mac Classes

50B/1229	04/18/90	
	05/09/90	

Mac Forum

50B/1229	04/04/90	Security Issues

Microsoft *Word* for the PC Workshops in May

50B/1237	05/01/90	Styles
	05/08/90	Glossaries/Macros
	05/15/90	Merge/labels

***FileMaker II* Workshops in June**

50B/1229	06/12/90	Entry Options
	06/19/90	Calculations/ Summary Fields
	06/26/90	Scripts, etc.

Note: There will be no classes in Microsoft *Word* for the Mac during April, May or June.

[27.4.11]
IF YOUR MEMORY SERVES YOU WELL...

You may remember that as recently as the beginning of FY90 we advised Macintosh users to buy more memory, especially if they were working with the minimum 1 Megabyte. At that time, an Apple 2 MByte upgrade kit cost $659 and memory could be purchased on the spot market for around $200.

The picture has changed dramatically in the last few months. Memory can now be purchased for about $75 per MByte! With new applications continuing to demand more memory, there has never been a better time to load up your machine for future growth and compatibility. System 7 will require a **minimum** of 2 MBytes to support all its features. The Workstation Group recommends that you have 4 MBytes or more.

[27.4.12]
INITIALIZING LASER PRINTERS

Bill Benson said it elsewhere in this Newsletter; we'll say it again. All Mac users on the same LocalTalk network should have the same versions of LaserWriter, LaserPrep, and PrintMonitor in their system folders. (Whenever a job is sent to the printer using different versions of these programs, the printer will be tied up for several minutes while it re-initializes to that version of software.)

If you use the QMS ColorScript printer, you will need LaserWriter 6.0, LaserPrep 6.0 and PrintMonitor 1.3 in your system folder.
These programs can be found in the Systems folder and in the Graphics folder on the WKSG file server.

[27.4.13]
THE MAC DOCTOR

Common System/Desktop Errors...
Things you can do (easily!) before calling for help

Question: I used to double click on a Microsoft *Word*™ document and the application would open automatically. Now when I attempt to do this, I get the message "The file could not be opened/ printed (the application is busy or missing)."

Answer: The desktop file, which contains information on applications and their corresponding documents, has become corrupted or infected by a WDEF virus and needs to be rebuilt. To rebuild the desktop file, hold down the COMMAND and OPTION keys during mounting of the desired volume.

Hard Drive: Mounting occurs on your hard drive during boot-up so you should hold down the COMMAND and OPTION keys during the start-up process. A dialog box will appear asking you to confirm this action. Answer YES and wait while the desktop file is rebuilt. There is no need to restart after a desktop is rebuilt, but any messages that were typed in the Get Info box for a particular file or application will be lost.

Floppy diskette: hold down the COMMAND and OPTION keys, then insert the floppy into the drive. The same dialog box will appear. Confirm the action and wait. The floppy diskette's desktop file will be rebuilt, and any WDEF virus will be removed.

There is an outside chance that the application you are trying to open from a document has simply become corrupted. A similar error message would appear. Try re-installing the application with the original floppy disks.

Question: My Mac system and desktop are acting very strangely; windows disappear and reappear, and I have to re-start my machine pretty often to clear up this erratic system behavior. What's going on?

Answer: Several things might be going on. You might have corrupted system files, a desktop virus, or both.

First, try resetting the Parameter RAM (they call it "zapping the PRAM"). It's very easy: simply hold down the COMMAND, OPTION and SHIFT keys simultaneously while accessing the Control Panel from the Apple menu. You will be presented with a dialog box asking you to confirm this action; answer YES. Wait a moment for the Control Panel to appear, close it, and restart your machine. The PRAM will then be cleared (you may have to reset your mouse tracking speed and some other minor system parameters after this procedure). If you have *Suitcase*™ installed, you will need to hold the mouse DOWN over the Apple icon in the Apple menu prior to holding down the COMMAND, OPTION and SHIFT keys and accessing the Control Panel.

Second, you may have a strain of the WDEF virus that attacks the desktop file. The virus does not appear to cause malicious damage, but it does have bugs and side effects that are very annoying. It is activated when the Finder opens the desktop file as part of the normal disk-mounting process. Fortunately, WDEF is easy to detect and eliminate. Scan your floppies with *Disinfectant* 1.6 (it's free; pick it up at the WKSG Lab). You may also rebuild the Desktop file of the infected disk. (see previous item). To keep WDEF from returning after your machine is "clean," install *GateKeeper Aid*. It will automatically remove any WDEF virus on a floppy disk inserted into your Mac. It too is free and can be picked up at the WKSG Lab.

[27.4.14]
SHORTCUT AND *HANDOFF*

. . . WKSG member Tom Pope finds finds two nifty utilities:

✔ ***Shortcut*** from Aladdin Systems ($79)
For those of you who hate having to navigate through the maze of folders to open a file, *Shortcut* can save you loads of time and headaches. *Shortcut* provides every **Save As...** and **Open...** dialog box with a special menu that contains a number of file and folder manipulation commands designed to streamline your travels through the Mac file system. Among them: remembering frequently used files and folders, file searching with a number of parameters (including finding files within *StuffIt* archives), unstuffing *StuffIt* archives, getting info on files and folders and many others. All these commands are also available from the keyboard, smart thinking. *Shortcut* takes up a fair amount of space - 356 KBytes with online help, 156 KBytes without - but it's features and functionality make it well worth the money.

✔ ***HandOff*** from Software Innovations ($49)

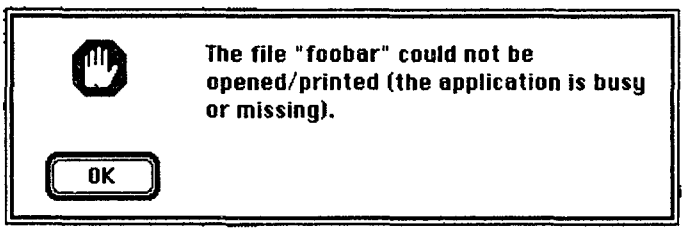

Aren't you sick of this? Me too, so I bought *HandOff*. Now when the Finder can't find an application to open my documents, I get the *HandOff* dialog (much more friendly) which prompts me for a substitute application. For instance, if I try to open a text file that I just downloaded from CSA I can tell *HandOff* to open Microsoft *Word*. And once I've done that, all those files will open *Word* in the future. I can also assign files to an application based on the filename extension, so all my 123 files with the .WK1 extension will open Excel. *HandOff* is one of those programs that is so useful I'm surprised it took as long as it did to show up. Both of these utilities were listed among **MacUser**'s top 200 Mac products.

[27.4.15]
LASER PRINTER WARS

Hewlett Packard recently announced a new printer, the LaserJet III, with an enhanced resolution. It lists for $300 less than the Model II which it replaces. With an Adobe Postscript cartridge and an AppleTalk interface card, the printer could prove to be a formidable challenge to Apple's LaserWriter market. Our price will be approximately $500 less than the cost of an Apple IINT laser printer.

The AppleTalk interface card will not be available until May or June. We will be purchasing an AppleTalk card and a PostScript cartridge to evaluate the applicability of HP's LaserJet III in a Macintosh environment. As many of you know, we have historically maintained the position that if you were in a Macintosh environment your most "cost effective solution" was an Apple Postscript printer. Apple recently reduced the prices on their PostScript printers and it is not unreasonable to expect some reaction to this new attack from HP. We will keep you abreast of our evaluation and of new developments in the coming months. Stay tuned. In the meantime, if you are interested in additional info about LaserJet III, read on.

The model III uses the same printer engine found in the old model II with a 300 dot-per-inch (dpi) resolution. However, the new model produces sharper lines and smoother curves which approach 500 dpi according to some product reviews. The enhancement is accomplished by special logic in the printer that calculates the position of the dots to be printed and adds a smaller dot above and below the normal "staircase" that appears on diagonal or circular lines. Since this "resolution enhancement" is built into the hardware, the improved print quality will occur for all existing software written for the HP LaserJet family of printers. You will need new software drivers to take advantage of other new features such as the ability to scale, rotate, reverse, shadow and mirror fonts available in the new HP printer language.

Lost in all the excitement of HP's announcement is the price reduction ($700 list) in the cost of an HP LaserJet IID printer, a printer with two paper cassette trays and double-sided printing capability ... not recommended for normal laser printers. Please feel free to call the WKSG at X6858 for price and performance data.

[27.4.16]
NEW APPLE PRODUCTS

...The Macintosh IIfx
A few weeks ago now, Apple introduced a high-powered Macintosh workstation (the most expensive yet), called the Mac IIfx. This is not a "beefed-up" Mac IIci, but a completely redesigned machine with a 32 bit 40-MHz 68030, zero-wait-state, a built-in Processor Direct Slot (32 KByte direct interface to the system bus), two smart dedicated I/O processors, 6 expansion slots, and other goodies. And for the first time, Apple is offering an optional 160 MByte hard disk, and a new adjustable-height keyboard, called the Extended Keyboard II. Speed-wise, the IIfx is purported to deliver about double the performance of the Mac IIci. Unfortunately, prices for currently announced configurations all exceed $5,000 and must be purchased with Capital Equipment funds.

Mac IIfx CPU w/4 MBytes RAM $5285
Mac IIfx CPU w/80 MByte hard disk.....$5817
Mac IIfx CPU w/160 MByte hard disk.....$6464

...new video cards
Two new display cards will drive all Apple monitors and replace the current color and gray-scale video cards.

(1) The basic 4•8 card will support 256 colors on the color monitor and up to 16 gray levels for the 1- and 2-Page mono monitors, and 256 levels for the hi-rez mono monitor. The 4•8 card can be upgraded to a 8•24 card by adding a VRAM expansion kit, supporting 256 gray levels, and 16.7 million colors.

(2) The second new card is the 8•24GC which has a RISC-based microprocessor for speed, and can display up to 256 gray levels, and 16.7 million colors. Both cards will require System 6.0.5.

Note: Only the 8•24 card is shipping. Base cost: $539

...System 6.0.5
We have just received a copy of this new release; it can be found in the Systems folder on the WKSG server. System 6.0.5 is required for the Mac IIfx product. (It will be shipped with all new Macs as the existing supply is depleted). As in all OS releases, this one includes some bug fixes. In addition, there are specific fixes and enhancements for the Macintosh IIci and the portable. Apple also recommends this release if you are using 32-bit *QuickDraw*. The prudent Mac user will wait a couple of months before upgrading. Of course, if you are experiencing system software bugs, you may want to try it out now.

...Compatibility Issues
There were (and still are) a few minor bugs with some applications using the Mac IIci, and a few more serious ones with the Mac Portable. The introduction of the Mac IIfx will probably trip up a good many applications too. The major software developers will be busy over the coming months chasing down customer complaints.

...Apple's Extended Warranty
Apple Computer recently announced a new Apple Hardware Warranty. Any hardware product purchased after Jan 1, 1990 is now covered by a one year limited warranty. (Did you know that federal law requires any warranty that is not for the life of the product to be called "limited. "). In plain English, the warranty extends free hardware repairs from 90 days to one-year from date of purchase. (IBM has offered this warranty coverage for the past couple of years).

For you world travelers, your warranty coverage is in effect in any country that has an Authorized Apple Service Provider. You don't have to do anything to participate in this new warranty program. Just save your purchase order and receival documents to establish your warranty period.

[27.4.17]
QUICKMAIL LICENSING

We have been working with the folks from CE Software to implement a volume discount agreement for upgrades to their QuickMail product. The details have not been resolved, however, CE has entered into an agreement with LLNL, so we have reason to be optimistic.

Presently we envision being able to offer upgrades to QuickMail Version 2.2 at a savings of approximately 40%. QuickMail Center administrators will have to visit the WKSG laboratory to obtain their key-disk upgrades. We are also discussing the process which will enable us to add new members to QuickMail with volume discount pricing. Contact William Jaquith or Richard LaPierre at x6858 if you have comments or questions.

[27.4.18]
MACWRITEII 1.1 UPGRADE

Claris has recently released a free update of *MacWriteII*, Version 1.0. Under agreement from Claris, the WKSG folks are authorized to update your original *MacWriteII* 1.0 disk to this latest version (V 1.1) at no cost. With the free upgrade, you get an Installation & New Features Guide which supplements information in original *MacWriteII* documentation. The new guide also explains the new features and enhancements.

An upgrade of any "older" version of MacWrite is not free; contact Bruce Burkhart at x6858 for additional information. New copies of *MacWriteII* 1.1 are available from the WKSG Lab for $49.50.

The latest version has the following new features:

- Capability to exchange files with more than 20 Macintosh and IBM-compatible word processing applications
- Improved HyperHelp capabilities that allow you to copy and paste from the help system or linked help stack directly into MacWriteII documents.
- Built-in virus protection assistance that notifies you of a possible virus before launching *MacWriteII*
- Enhanced overall performance of 15 to 50 percent for the MacPlus and MacSE
- More available disk space due to a 100K reduction in the size of the program.

[27.4.19]
HYPERCARD CORNER

. . . by HyperFan Bruce Burkhart

HyperCard 2.0
Finally!! Here's the first real news about the long awaited major upgrade. MacWeek (3/6/90) has seen a prototype, expected to be demo'd at the Apple's Worldwide Developers Conference in May. Look for a final release version early this fall (we hope!).

Lots of enhancements and new features were outlined in the MacWeek article. Some of these are:

- A new file format and better windowing
- Enhanced text editing (multiple fonts and styles in a field)
- Improved hypertext support (any text can automatically be a button)
- Better search and reporting capabilities
- New visual effects and graphics commands
- An incremental compiler, a symbolic debugger and better script editor.

On the other hand, no mention was made of a color version. Look for lots of commentary in the next few months, pro & con.

MacExpo '90
MacExpo, the "Mac Everything" show, is on April 11, 12 & 13. Like last year, the 3-day extravaganza will be held in Moscone Center, Brooks Hall and Civic Auditorium. Everything you ever wanted for the Mac — and more — will be exhibited during this three-day binge. Busses will shuttle you back and forth all day long. For a MacExpo flyer, stop by the Workstation Lab and check out the Conference Sessions and other goodies. A 3-day admission to the "Conference Sessions & Exhibits" is $80; "Exhibits" only, is $25, cash at the door. There will probably be a low 1-day admission price for just Exhibits.

New Mac Users and HyperCard
HyperCard is a component of the system software which was included with your Mac. New users invariably ask, "what can I do with it?"

HyperCard's unique feature give you the opportunity to create your own applications (called "stacks") by relatively simple methods. The Workstation Lab has lots of example stacks you can look through for ideas that may help you. Also, check out the MacExpo in April. Lots of stacks will be available from the booths of the Berkeley Macintosh Users Group and the Boston Macintosh Users Group. These BMUGs are the two largest user groups in the world.

E-Mail Help Stack series
As reported last month, a new HyperCard stack "An Introduction to Electronic Mail at LBL" has been developed in the Workstation Lab and will be released April 1. The stack has been designed primarily for new and intermediate users who need a better overall view of Electronic Mail at LBL. This first stack will be primarily an introduction to all aspects of E-Mail, with additional stacks, detailing various components, to follow.

A second stack will talk about Telnet and how it works with Electronic Mail at LBL. All stacks will include sound & film clips of live Macintosh login Electronic Mail sessions. Highlights of the initial "Introduction" stack:

- How to open an account on the Cluster/Unix machines
- How to connect your workstation to your E-Mail account
- What is Telnet, VersaTerm, and the IDA box?
- Mail Address Basics, finding an address
- How to send mail and some Network basics.

Conus Stack upgrade
The CONUS HyperCard stack was designed to help with the "travel per-diem" rates and other cost calculations needed for travel forms at LBL. This new upgrade includes the 1/19/90 rate revisions and incorporates figures for lots of new cities. It's on the WKSG server, or drop by the WKSG with a blank formatted disk for a copy.

Ford *Simulator* II upgrade
Forget the new 1990 car specifications and go directly to the driving games. Version 1.1 is somewhat more sophisticated than the first release; it has better graphics and sound this time around. It's on the WKSG Server, or bring a blank disk to the WKSG Lab for a copy.

ICSD TRAINING SCHEDULE

April - June 1990

COMPUTING SERVICES CLASSES

Bldg. 50B, Rm. 1237

The following courses are offered by Computing Services. To enroll, obtain you supervisor's approval and then contact Pat Bean, x7008.

Electronic Mail: Survey	May 10 10 AM - Noon	Intro. to C Programming	May 16, 18, 23, 25 10 AM - Noon

WORKSTATION CLASSES

The following courses are offered by the Workstation Group. There is no charge for these classes. To enroll, obtain your supervisor's approval and then contact Carole Casaretto, x6858.
(Those classes with asterisks (*) prepended are already full.)

IBM-PC: Bldg. 50B, Rm. 1237

Introduction to PC-DOS	* April 17, 19 1 - 2:30 PM
	* May 22, 24 1 - 2:30 PM
	June 19, 21 1 - 2:30 PM
Microsoft Word for the PC	April 17, 19, 24, 26 3 - 4:30 PM
	May 15, 17, 22, 24 3 - 4:30 PM
	June 19, 21, 26, 28 3 - 4:30 PM

Macintosh: Bldg. 50B, Rm. 1229

Basic Macintosh	April 18 12-1 PM no sign-up req.
Basic Intro. to *FileMaker*	May 9, 11 1 - 3 PM
Beginning *MS Word 4.0*	April 23, 25, 27 10 - Noon
	May 14, 16, 18 10 - Noon
Intro. to *MacDraw II*	May 8, 9, 10 10:30 - Noon
Beg. *Excel* Spreadsheet	* April 30, May 2, 4 10 - Noon
	May 21, 23, 25 9 - 11 AM

The Workstation Group also offers **noon time classes** (no sign-up required) in the following subjects:

Macintosh Forum (discussing security issues)	4/4	50B/1229
Basic Macintosh Class	4/18, 5/9	50B/1229
Microsoft Word Workshops for the PC	5/1, 8, 15	50B/1237
FileMaker II Workshops	6/12, 19, 26	50B/1229

See Workstation Scene Newsletter Articles for more details on these workshops.

YES, I would like to receive the LBL Computing Newsletter

NAME .....

ADDRESS .....

.....

CITY

STATE .....

ZIP

PHONE .....

Return to ..... LBL Computing Newsletter
Computer Center Library - MS 50F
One Cyclotron Road
Berkeley, CA 94720

Attention: NL MAILING LIST

COMMENTS, QUESTIONS, SUGGESTIONS FOR FUTURE ARTICLES:

Lawrence Berkeley Laboratory
Computer Center Library - MS 50F
One Cyclotron Road
Berkeley, CA 94720
ATTN: Newsletter Mailing List

NAMES AND NUMBERS TO KNOW

from on-site, dial <xxxx> From off-site, dial (415)-<486-xxxx> From FTS, dial 451-<xxxx>

INFORMATION AND COMPUTING SCIENCES DIVISION

Director: Stewart Loken (SCLoken)	7474	50B	2232E
Deputy Director: Sandy Merola (AXMerola)	7440	50B	2232C
OFFICE OF COMPUTING RESOURCES			
Head: Dave Stevens (DFStevens)	7344	50B	2258F
ADVANCED DEVELOPMENT PROJECTS			
Head: Dennis Hall (DEHall)	6053	50B	3238
COMMUNICATIONS & NETWORKING RESOURCES			
Head: Ken Wiley (KGWiley)	7083	50B	2258E
NETWORK SYSTEMS			
Bob Fink (RLFink)	5692	50B	2258B
COMMUNICATIONS & NETWORKING FACILITIES			
Sig Rogers (SGRogers)	6713	50B	2258G
TELEPHONE SERVICES			
Sam Gibson (FSGibson)	4234	80A	103
COMPUTING SERVICES			
Head: Marv Atchley (FMAtchley)	5455	50F	117
Deputy: Harvard Holmes (HHHolmes)	5742	50F	115
Central Office	5871,2	50F	125
VMS SYSTEM			
Eric Beals (ERBeals)	5351	50F	143
System Manager: Gil Johnson (GPJohnson)	6211	50B	1225
UNIX SYSTEM AND DISTRIBUTED PRINTING			
Craig Eades (CAEades)	6569	50F	142
UNIX (DHCleveland)	5336	50F	110
Distributed Printing (RERendler)	5629	50F	129
System Manager: Roger Cochran (RJCochran)	5565	50F	127
USER RESOURCES			
Jerry Borges (JTBorges)	5568	50F	144
Accounting	7008	50B	1232A
HELP DESK	5981	50B	1215
Math Libraries	4749	50F	114
Library/Document Sales	7008	50B	1232A
Opening a New Account (PSBean)	7008	50B	1232A
UNIX and Cluster: Software Evaluation and Acquisition	5568	50F	144
GRAPHICS			
Nancy Johnston (NEJohnston)	5093	50F	145
COMPUTING FACILITIES			
Connecting a Remote Terminal	5354	50B	2259
Terminal Repair: Paul G Murray (PGMurray)	5354	50B	2259
Operations Area	6211	50B	1215
COMPUTING APPLICATIONS			
Applications Group Head: Jerry Borges (JTBorges)	5568	50F	144
WORKSTATION GROUP			
Group Leader: Richard LaPierre (RLLaPierre)	4692	50B	2245
Software Evaluation and Acquisition	6858	50B	2231

MFE Consulting Number is 422-1544

CENTRAL ELECTRONIC MAIL FACILITY

First Initial-Middle Initial-Last Name is the standard recipient format in lab-wide mailing address

Examples: VMS.....lbl::JASmith
UNIX.....JASmith@lbl.gov
Software Tools.....JASmith@lbl.gov

NETWORK CONTACT INFORMATION

LBLnet New Installations & Trouble Calls			
Ted Sopher (TGSopher)	4559, 5354	50B	2266
DECnet Administration			
William Jaquith (WDJaquith)	6966	50F	146
IBM PC & Mac Network Administration			
William Jaquith (WDJaquith)	4388	50B	2231C
Nancy Travis (NJTravis)	7690	50B	2231B
Distributed Printing/Kinetics FastPath administration and requests			
Bob Rendler (RERendler)	5629	50F	129
AppleTalk Support	5354	50F	2259

LBLnet troubles ..... *trouble@lbl.gov*
LBLnet comments or non-critical trouble reports ..... *lblnet@lbl.gov*
Internet administration ..... *ip-request@lbl*
LBL Postmaster for Lab-wide mail ..... *postmaster@lbl.gov*
Network Advisory Group (NAG) ..... *nag@csam.lbl.gov*

ICS

ICS Access Names

[VAX 64xx's (Generic) ..... CSA]

VAX 6420 (VMS) CSA1
VAX 6420 (VMS) CSA2
VAX 6410 (VMS CSA3

SUN-3/280 (UNIX 1) UX1
SUN-3/180 (UNIX 3) UX3
SUN-4/390 (UNIX 5) UX5
SUN-3/180 (ISD) ..... ISD

Dial-up Access Numbers for ICS

Incoming Baud Rate	Connect Baud Rate	Number
3/12/2400 BPS	3/12/2400 BPS	486-7930
3/12/2400 BPS	9600 BPS	486-7900
9600 BPS	9600 BPS	486-7996

Local TYMNET Access Numbers for ICS

	1200 BPS	2400 BPS
Oakland	430-2900	633-1896
Walnut Creek/Concord	935-0370	935-1507
San Francisco	974-1300	543-0691
Santa Clara	408-432-3430	432-8618
Palo Alto	415-366-1092	361-8701
San Jose	408-432-3430	432-8618
Fremont	490-7366	490-7366
Davis	916-758-3551	
Burlingame	415-588-3043	
Vallejo	707-644-1192	
Antioch	754-8222	
Pleasanton	462-2101	

Lawrence Berkeley Laboratory
Computer Center Library - MS 50F
One Cyclotron Road
Berkeley, CA 94720