HIGH INTENSITY URANIUM BEAMS

From the SuperHILAC and the Bevatron

PRELIMINARY DESIGN REPORT

February, 1979

Accelerator and Fusion Research Division
Lawrence Berkeley Laboratory
University of California

DISCLAIMER

This document was prepared as an account of work sponsored by the United States Government. While this document is believed to contain correct information, neither the United States Government nor any agency thereof, nor the Regents of the University of California, nor any of their employees, makes any warranty, express or implied, or assumes any legal responsibility for the accuracy, completeness, or usefulness of any information, apparatus, product, or process disclosed, or represents that its use would not infringe privately owned rights. Reference herein to any specific commercial product, process, or service by its trade name, trademark, manufacturer, or otherwise, does not necessarily constitute or imply its endorsement, recommendation, or favoring by the United States Government or any agency thereof, or the Regents of the University of California. The views and opinions of authors expressed herein do not necessarily state or reflect those of the United States Government or any agency thereof or the Regents of the University of California.

TABLE OF CONTENTS

		Page
A.	Introduction	1
B.	SuperHILAC High Mass Injector	7
C.	SuperHILAC Building Additions	55
D.	Bevalac Transferline	59
E.	Bevatron Vacuum Improvement	61

A. INTRODUCTION

A 1 HISTORY OF THE PROJECT

The production of relativistic heavy ion beams has been a major developmental effort at Lawrence Berkeley Laboratory since 1971, when nitrogen ions were successfully accelerated in the Bevatron. With the completion of the transferline linking the SuperHILAC and the Bevatron, the Bevalac Heavy Ion Facility became operational in the summer of 1974. Since then, the Bevalac has forged into totally new physical realms by producing high energy beams of carbon, oxygen, nitrogen, neon, argon, and most recently, iron. At the same time, complete computer control has been achieved at the SuperHILAC, making it possible to accelerate two distinct ion beams, with one as heavy as lead, and timeshare them not only among its own users but also with the Bevalac. The result is that the diverse research programs -- which range from nuclear physics and nuclear chemistry to biomedical studies and cosmic ray calibrations -- at both these National Facilities can proceed simultaneously.

A 2 PROJECT OBJECTIVES

Experimental results with these heavy ion beams have spurred worldwide interest in studying interactions with even higher mass beams at energies from several MeV to a few GeV per nucleon. The modifications entailed in this project, consisting of a new injector for the SuperHILAC, an upgraded transferline to the Bevalac, and an ultra high

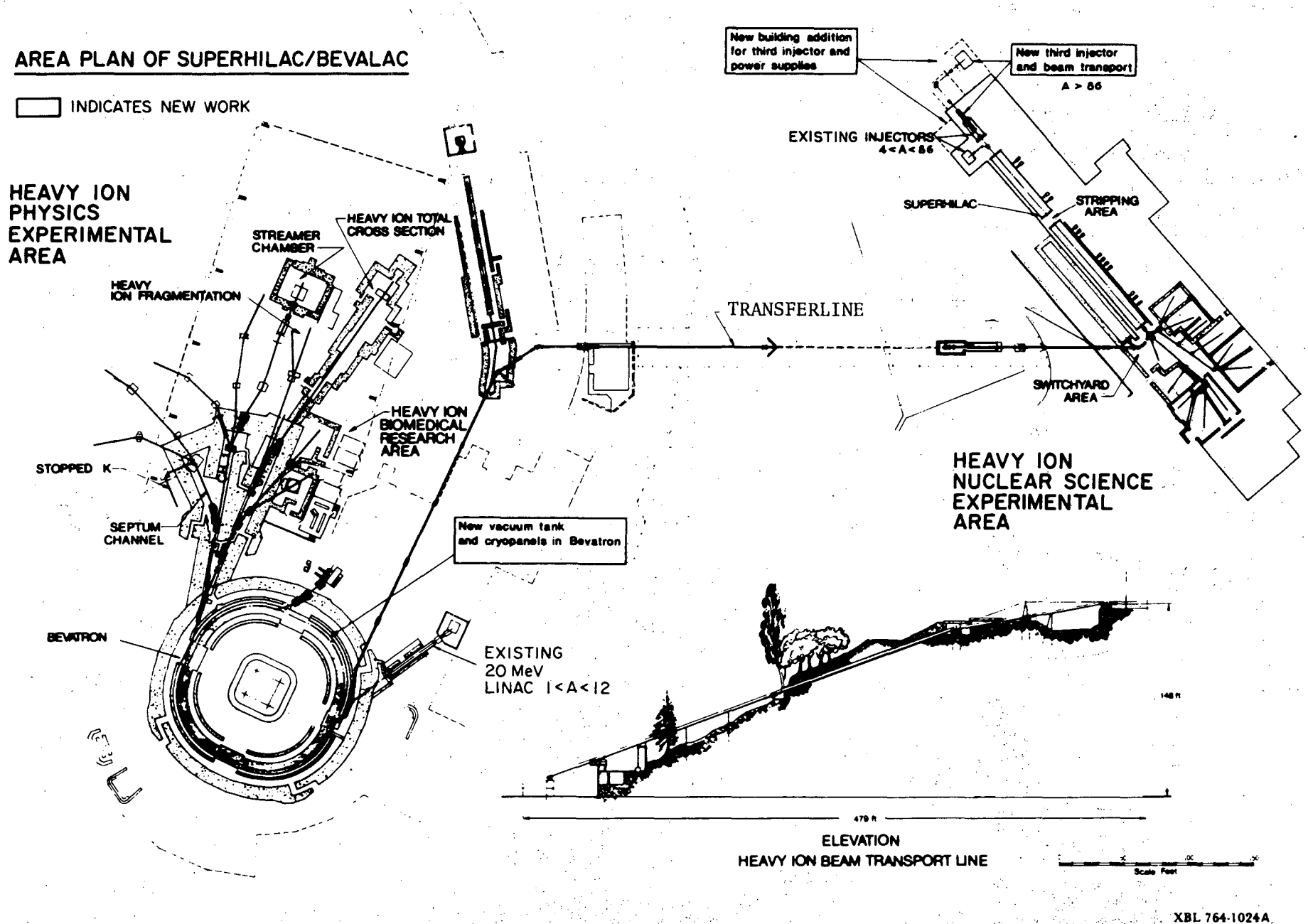
AREA PLAN OF SUPERHILAC/BEVALAC
INDICATES NEW WORK
HEAVY ION PHYSICS EXPERIMENTAL AREA
STREAMER CHAMBER
HEAVY ION TOTAL CROSS SECTION
HEAVY ION FRAGMENTATION
HEAVY ION BIOMEDICAL RESEARCH AREA
STOPPED K
SEPTUM CHANNEL
BEVATRON
New vacuum tank and cryopanels in Bevatron
EXISTING 20 MeV LINAC 1<A<12
TRANSFERLINE
New building addition for third injector and power supplies
New third injector and beam transport
A > 86
EXISTING INJECTORS 4<A<86
SUPERHILAC
STRIPPING AREA
SWITCHYARD AREA
HEAVY ION NUCLEAR SCIENCE EXPERIMENTAL AREA
148 ft
479 ft
ELEVATION
HEAVY ION BEAM TRANSPORT LINE
Scale Feet
XBL 764-1024A

Fig. A-1.

vacuum at the Bevatron, present a unique and economical opportunity for achieving relativistic beams of all mass numbers in addition to high intensity, intermediate energy beams between 35 and 200 MeV/amu.

A 3 PRESENT CAPABILITIES

The SuperHILAC currently accelerates ions up to mass 208 (lead) to 8.5 MeV maximum energy, but with low intensity (2 particle nanoamperes) at this upper end of its capability. Higher intensity beams (2 particle microamperes) are delivered at mass 40 and below.

The Bevalac's present capability extends to mass 56 ions (iron) at up to 2.1 GeV. Again, intensities, which reach 5 x 10^9 particles per second (2 x 10^{10} particles per pulse) for carbon ion beams, drop to 1 x 10^5 particles per pulse for iron.

A 4 PERFORMANCE SPECIFICATIONS

When the modifications are completed, the SuperHILAC will accelerate all ions through uranium with intensities increased by a factor of 100. The Bevalac will take these SuperHILAC beams, including uranium, and accelerate them to the maximum Bevatron operating field which, in the case of uranium, will yield 1.0 GeV/amu with intensities as high as 10^8 particles per second. Lighter ions will have maximum energies up to 2.1 GeV/amu and intensities constrained only by the space charge limit of the machine.

A 5 SPECIAL FACILITIES

Improvements in three major areas are required to accomplish these three goals:

A 5.1 SuperHILAC High Mass Injector

A pre-accelerator, Wideroe linac and beam transport lines

are the principal elements of the new (third) injector. The pre-accelerator features an air-insulated Cockcroft-Walton power supply to facilitate quick ion source changes. The Wideroe linac accelerates the low-velocity, low charge-state very heavy ions for acceptance into the SuperHILAC. A gas vapor stripper at the exit of the Wideroe strips ions to the charge state required by the SuperHILAC. Complete time-sharing of three beams can be accomplished readily with the existing computer control system with the addition of a third operator control station in the control room.

A 5.2 Bevalac Transfer Line

To accommodate the heaviest full-energy, exit-stripped particles produced by the SuperHILAC, the last two dipole magnets in the transferline must be replaced. Other modifications are minor.

A 5.3 Bevatron High Vacuum Improvements

The Bevatron's present vacuum of 10^{-7} torr must be replaced with an ultra high vacuum of 10^{-10} torr to permit acceleration of very heavy ions in a variety of charge states and minimize loss of ions due to charge-exchange interactions with residual gas atoms. A completely new, all-metal vacuum envelope will be built and installed within the entire circumference of the Bevatron. The new chamber will be self-supporting against atmospheric pressure. A rough vacuum will be achieved with mechanical pumps and liquid-nitrogen-cooled cryo-sorption pumps, bringing the vacuum to 10^{-4} torr. The final vacuum is reached by a cryopanel system which includes helium-cooled surface shielded by liquid nitrogen-cooled surfaces within the vacuum chamber.

The r.f. accelerating electrode, the internal beam instrumentation, plus the injection and extraction magnets

will be rebuilt to be compatible with the ultra high vacuum.

Quality control will be an extremely important aspect of this project to guarantee meeting the ultra high vacuum objectives.

A 6 CONVENTIONAL FACILITIES

The new conventional facilities needed for the project are minimal. About 1700 square feet of space at the SuperHILAC for the Cockcroft-Walton injector enclosure, the beam transport lines, and the power supplies are needed. These areas will be primarily concrete and steel structures to house equipment and will not provide space for offices or locations for additional personnel over those presently in Building 71. The conventional facilities will also include additional power distribution for the research equipment and space heating and lighting, fire protection, heating and cooling for the equipment spaces, and cooling water for the equipment.

A 7 TIME SCALE

The projected time scale of this project is 30 months, which brings completion in early 1981.

B. SUPERHILAC HIGH MASS INJECTOR

B 1 GENERAL DESCRIPTION

The two injectors presently used at the SuperHILAC are a 750 kV air-insulated Cockcroft-Walton (Eve) and a 2.5 MV pressurized dynamitron (Adam). The Eve injector can deliver adequate intensities of ions up to mass 40 (argon). The Adam injector can accelerate lower charge states, and produce useable beams of heavier ions. The intensity of these beams decreases as the mass number increases, with the lowest useable intensity being achieved with lead beams.

Experience with the two existing injectors provides substantial help in defining the general requirements of a new injector for ample beams above mass 40. The requirements for acceptance by the first tank of the SuperHILAC are a particle velocity $\beta = 0.0154$ (corresponding to an energy of 113 keV per nucleon) and a charge-to-mass ratio of 0.046 or larger. Current ion source performance technology indicates an air-insulated Cockcroft-Walton as a preaccelerator because of its easy accessibility and good overall reliability. The low charge-state ions then receive further acceleration and, if necessary, stripping to the required charge state before injection into the SuperHILAC. A low beta accelerator of the Wideroe type capable of performing this task has been built and successfully operated at the UNILAC facility in Darmstadt, W. Germany. We will adapt this machine to our purposes. The injector system described in the following sections, and summarized in the table below, consists of a Cockcroft-Walton pre-injector, injection beamlines and isotope analysis, the low velocity linear accelerator, and SuperHILAC control center modifications (see Figs. B-1 and B-2).

Parameters of third injector

Cockcroft-Walton Pre-Accelerator:	
Terminal voltage, $^{238}U^{5+}$	750 kV
Peak current	15 mA
Regulation	0.1%
Power available, terminal	75 kVA
Terminal volume	35 m^3
Ion Source:	
Type	Radial Extraction PIG
^{238}U charge state	5+
^{238}U flux	200 μA 5+ peak
Extractor voltage	30 kV
Duty factor	33%
Wideroë Structure:	
Length	5.17m
Input energy	15.8 keV/amu
Output energy	113 keV/amu
RF power requirement	100 kW peak RF
Stripper:	
Type	Fluorocarbon vapor
Efficiency	12% for U^{11+}
SuperHILAC Output:	
U^{40+}	2 particle μA peak

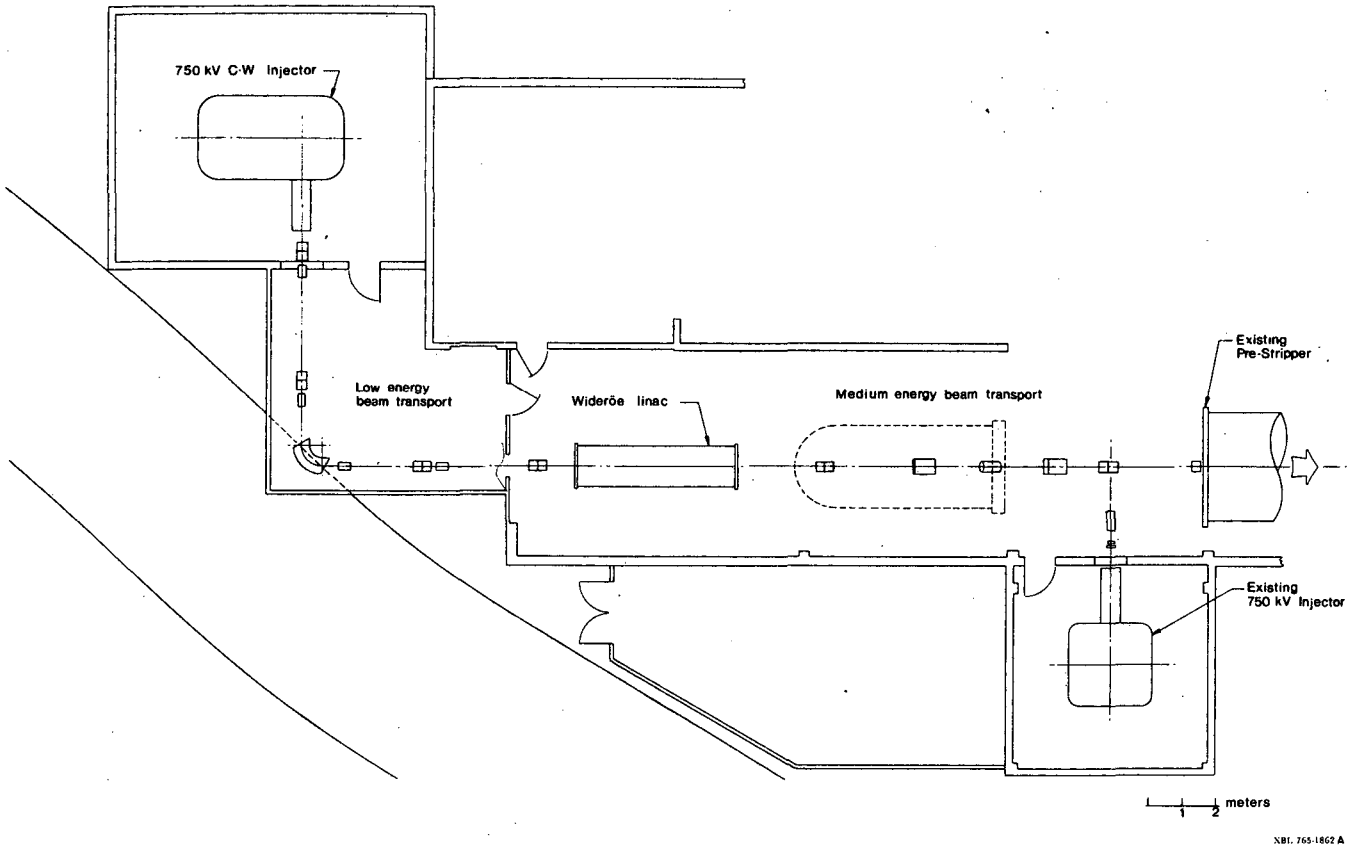

Fig. B-1. Plan view of proposed SuperHILAC injector area.

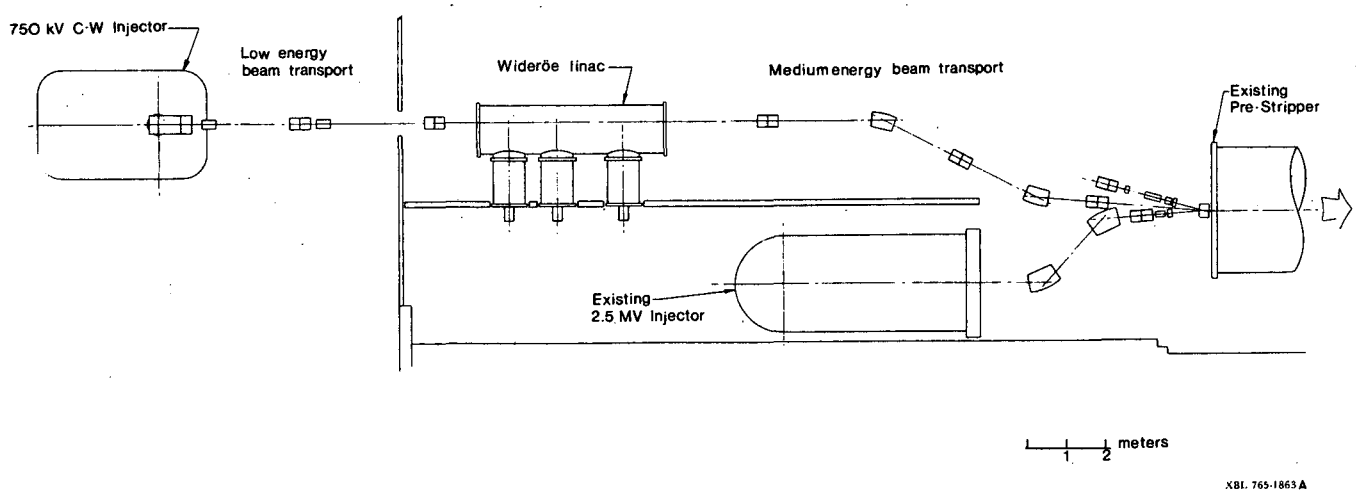

Fig. B-2. Elevation view of proposed SuperHILAC injector area.

B 2 COCKCROFT-WALTON PRE-INJECTOR

The pre-injector portion of the new injector facility consists of a Cockcroft-Walton high voltage power supply, the ion source, the high voltage terminal, and the accelerating column.

B 2.1 Cockcroft-Walton Power Supply

The high voltage power supply for the pre-accelerator will be a half-wave cascade voltage multiplier. The recently installed Cockcroft-Walton power supply under the Eve injector terminal is a prototype of the device which will be constructed for the SuperHILAC third injector.

The power supply will consist of ten decks and will be driven by an air core transformer at the bottom of the power supply stack. Except for monitoring circuits, all associated electronics will be located outside the high voltage enclosure.

The voltage required from the Cockcroft-Walton (C-W) power supply to accelerate $^{238}U^{+5}$ is 750 kV. This voltage can be achieved by the Eve C-W with some difficulty. By increasing the distance between power supply components, enlarging the radius of curved surfaces, and adding one more deck 750 kV will be reliably achieved by the new power supply.

Each deck of the C-W consists of two 200 kV PIV rectifier modules, two 100 kV 0.025 μfd capacitors, and surge current limiting resistors. Each capacitor is protected by a 25 ohm non-inductive resistor. The rectifiers have 50 ohm resistors at each end. A spark gap assembly standing in the center of the power supply structure is connected to all of the capacitors and rectifiers to protect them from excessive voltage.

The C-W components are connected to rings which are

supported by four PVC solid core legs. The distance between ring centers is about eleven inches. The entire voltage produced by one deck, 100 kV maximum, is held across the nine inch space between rings. The maximum gradient along the power supply is then 11.1 kV/inch. The spark gaps will not permit the voltage on one deck to rise above 100 kV.

The power supply structure is approximately ten feet high. It is mounted on a movable plate under the terminal. The C-W may be rolled out from under the terminal for service. The C-W is driven by an air core transformer with a resonant secondary. Four series-parallel vacuum capacitors in shunt with the transformer secondary from a circuit resonant at about 90 kHz. The shunt capacity added by the C-W stack lowers the resonant frequency to about 80 kHz. With 14 kV_{pp} primary input, the transformer secondary voltage is 100 kV_{pp} at resonance.

The transformer is driven via a long coax by two 4CW25,000 tetrode tubes operating in parallel. These tubes are biased class C. With no input RF, the tubes are shut off so no high voltage is generated in the stack. The grids of the tetrodes are driven by a solid state amplifier. The amplitude of the RF pulses determines the plate swing of the tetrodes and consequently the amount of the high voltage produced at the terminal.

The solid state amplifier is driven by a voltage controlled oscillator (VCO) and a voltage controlled amplifier (VCA). A phase detector compares the tetrode grid and plate voltages which are 180° out of phase at resonance. If the resonant frequency of the C-W drive transformer changes, the phase detector output voltage corrects the VCO frequency to retain a resonant drive.

A generating voltmeter which measures the voltage gradient between the HV terminal and the enclosure walls provides the DC feedback signal for HV regulation. The generating voltmeter output is compared with a reference voltage. An error voltage is produced which controls

the output of the VCA. The reference is raised or lowered by motor driven potentiometers. When the C-W is turned on or recovering from a spark, the reference voltage is electronically ramped from zero up to its former value in 5 sec.

The frequency response of the generating voltmeter is about 1 Hz. Feedback voltages in a bandwidth from 1 Hz to a few kHz are obtained from a capacitive voltage divider.

A second generating voltmeter is used for HV monitoring. It is calibrated roughly by measurement of the C-W input peak to peak RF x N x .95 where N is the number of decks. Final calibration is accomplished with a beam energy measurement.

The C-W is well protected internally by the surge-limiting resistors and spark gaps. C-W or terminal sparking is sensed through the capacitive divider. When a spark occurs, the RF drive to the C-W is dissipated in the surge resistors and the spark. After one year of operation and much sparking, the Eve C-W has had no component failures.

At 800 KV the energy stored in the C-W and terminal is nearly 1 kjoule. Each capacitor may store as much as 125 joules. These dangerous charges must be fully dissipated before personnel are allowed in the HV enclosure. A door-actuated grounding arm discharges the terminal. A manually operated ground hook system discharges all of the C-W capacitors when the C-W is serviced.

A service platform which is lowered when the C-W is running is raised to permit access to the terminal interior.

The parameters considered in designing the voltage multiplier are these:

V_o	Theoretical DC output voltage.
V'_o	Actual DC output voltage.
Vin_{pp}	AC input voltage, peak-to-peak.
N	Number of decks (there are two sections per dock).
f	Operating frequency.
I	DC load on the power supply.
C	Coupling capacitor.
C_s	Stray capacitance per section.
$\delta V'_o$	Ripple voltage due to circulating current.
ΔV_o	Voltage drop due to load current.
δV_o	Voltage ripple due to load.

The highest voltage required for $238\ U^{+5}$ is 750 KV. A maximum voltage design of 950 KV will insure stable operation at 750 KV.

$$V'_o = 950 \text{ KV}$$

The maximum beam current is 20 mA for 14 ms at a duty cycle of 50%. I_{avg} is 10 mA maximum.

$$I = 10 \text{ mA.}$$

The lowest operating voltage the terminal requires is 500 KV. The maximum load induced ripple, δV_{o1}, is taken as 0.1% V'_o minimum to limit beam energy spread.

$$\delta V_o = 500 \text{ v}$$

The multiplication efficiency decreases as the number of

decks increases. A loss of about 5% occurs with 10 decks. With 20 decks a loss of 17% occurs. With all factors considered a value of 10 for N was chosen. This permitted the use of available capacitors and rectifiers.

$$N = 10$$

The operating frequency affects ΔV_o and δV_o, that is, the higher the frequency, the lower the voltage drop and ripple due to load. Circulating currents increase with frequency. Also, rectifier efficiency due to recovery time decreases with frequency. An operating frequency of 100 kHz was chosen as the highest in consideration of rectifier efficiency. Actual operation is between 80 and 90 kHz.

$$f = 85 \text{ kHz}$$

The coupling capacitor value is determined by the load induced ripple requirement.

$$C = \frac{I_{pk}}{f\delta V_o} \times \frac{N(N+1)}{2} = \frac{.02}{85\text{x}10^3 \text{x } 500} \frac{10(10+1)}{2} = .025 \text{ x } 10^{-6} \text{ fd.}$$

An oil-filled, extended foil, 100 kV, 0.025 fd capacitor is used. It is tubular in shape, 5 inches in diameter and 24 inches long.

$$C = 0.025 \ \mu\text{fd.}$$

The stray capacity per deck, C_s, affects multiplication efficiency and circulating current. It was measured on a two deck model of the voltage multiplier.

$$C_s = 10 \text{ to } 20 \text{ pf}$$

The load induced droop $\Delta V_o = \frac{I}{fC} \times \frac{N}{3} (2 N^2+1)$

This is the voltage droop that will occur with a DC load of I amperes. The drive circuitry just have sufficient overdrive capability to correct for the droop. With a pulsed load the drive circuitry must have sufficient bandwidth to correct the droop during the pulse.

For the system described here the uncorrected droop is about 3 kV at a load current of 10 ma DC.

The input voltage to the multiplier for 950 kV output is:

$$\frac{V'_o \, 2\sqrt{C_s/C}}{\tanh(2N\sqrt{C_s/C})} = 105 \text{ kV}$$

$Vin_{pp} = 105$ kV

$C_s = 20$ pf

$C = 25$ nf

$V'_o = 950$ kV

The ripple voltage due to circulating currents, V'_o, is not affected by the load. The magnitude of this ripple is proportional to C_s/C. V'_o is bucked out out by bouncing the return side of the C-W a few KV's out of phase with the ripple. Because of phase shifts along the C-W stack, the ripple cannot be reduced to zero. V'_o has been reduced to about 500 V_{pp}. The uncompensated magnitude of this ripple is:

$$\delta V'_o = C_s/C \times \frac{\cosh(2N\sqrt{(C_s/C)}-1)}{\sinh\sqrt{C_s/C} \times \sinh(2N\sqrt{C_s/C})} \times V'_o = 7.4 \text{ kV}_{pp}, \text{ where}$$

$V'_o = 950$ kV, $C_s = 20$ pf, $C = 0.025$ μfd, and $N = 10$.

A few kilovolts are dropped across the rectifiers. Forward voltage drop per rectifier is about 200 V. The total voltage is 20 x 200 = 4 kV.

During the testing phase at the Bevatron, the Eve C-W power supply would produce about 600 kV without corona. Above 600 kV, corona was observed around the capacitor terminals on the AC side of the stack. The installation of grading rings about the stack solved the corona problem. From these tests it was determined that the C-W could not run at 750 kV without some grading of the area around the stack. The graded support columns for the Eve terminal provided the necessary grading of the space near the C-W stack.

The mounting components for the new C-W are larger than those for Eve's C-W, and the radii of all exposed parts is larger. The onset of corona will occur at a higher level than before. The support columns for the new injector terminal will grade the environment around the stack. It is assumed that the new C-W will run corona-free at 800 kV. The columns are widely separated on two sides. It may be necessary to add two additional non-weight bearing columns to provide the required grading. Grading rings around the power supply may be necessary as a last step to achieve the desired performance.

Considering the size of the terminal structure and the distance to ground planes, the HV system could probably be made to run reliably at its design limit. If careful attention is paid the C-W environment, and if the HV surfaces are not compromised, the system would probably produce 850 kV routinely.

B 2.2 Ion Source

There will be provision for two ion sources of different types in the SuperHILAC third injector. They will not be operated simultaneously. Both sources will use a common analyzing magnet and extractor power supply. Additional specialized equipment are associated with each source.

The Pasyuk source will be used mainly for the production of solid material ion beams, but also for gaseous ions. The source will

operate reliably from 10% to at least 30% duty factor. The design of this source originates from the UNILAC version of the Pasyuk Penning source now in use at G.S.I. This basic source is often called a P.I.G. source since it was originally developed from the Penning Ionization Gauge (Penning, 1937)[1]. In this case, ions are extracted from a radial slit in the anode. The anode bore is long in length and is fully immersed in a uniform longitudinal magnetic field.

The arc supply will be pulsed and is rated at 12 amps with an output voltage of 2 kV. Additional supplies for filament heating (100 amps, 10 V), electron heating (2 amps, 1,500 V), and sputtering (2 amps pulsed, 1,000 V) are called for during normal operation. The extraction supply and magnet will be discussed shortly.

Solid metal ion production is most efficient when the vapor pressure of the material and the operating temperature of the source are such as to support a vapor pressure in the low sub-micron range. The best performance at G.S.I. to date is with gold. Nearly 1 emA of Au^{5+} is anticipated with an acceptable normalized emittance of .05 π cm-mrad. Other heavy elements will require development work for comparable beam intensities.

There will be also an axially extracted ion source in the terminal, for the production of intense beams of gaseous ions. Several types are under consideration, from the high duty factor (25%) duoplasmatron introduced by Von Ardenne (1956)[2] and refined for heavy ion production most recently at G.S.I. by Keller (1978)[3], to the low duty factor multiple aperture neutral beam source developed by Ehlers (1971)[4]. The latter source may be suitable for producing multi-milliampere beams of such ions as Xe^{3+} for low duty factor Bevalac use. Recent measurements with xenon have been made by Clark and Zajec (1978)[5] that are encouraging. Further measurements of the emittance of the multiple aperture source will begin shortly at LBL.

The arc supply for either of these sources will be pulsed, and is rated up to 30 amps, 500V. Additional supplies for electron suppression in the extraction region (15 mA, 5 kV) and filament heating (up to 550 amps, 14 V) will be required for operation of either of these sources. This filament supply may be shared with the Pasyuk source.

A short beam line between axial ion source and analyzing magnet of one meter in length will require one or more doublets or a triplet of 100 mm diameter. Beam steering will be controlled by positioning the source with respect to the extractor, fixed at earth potential.

The analyzing magnet for the axial source will bend the beam $\sim 65^{\circ}$ in order to eliminate unwanted and very intense beams of lower charge state ions. A bending radius of 530 mm might be typical. This same analyzing magnet will provide the magnetic field for the Pasyuk source with a gap of at least 170 mm. Further testing at LBL will be required before specifying the magnetic field strength in this area. A trade-off of floor space and weight vs. beam quality will likely have to be made. It is probable that the majority of the analyzing track will have a smaller gap in order to reduce the bending radius and magnet size. The initial Pasyuk source bending radius will be at least 310 mm with an overall analysis from source to beam line of about 130°.

While the source and analyzing magnet cannot yet be described, we expect it to have 1×10^5K ampere turns. A well regulated supply will be required ($\sim$300 amperes, 5×10^{-4} regulation). Its size will be approximately 1 m^3 and will weigh $\sim$3 tons.

Several magnetic quadrupoles will transport the beam between the magnet and the column entrance. Steering magnets, collimators, and a faraday cup will also be located along this beam line, 1 meter or less in length.

The extractor supply will be used with either source for elevating source and power supplies above terminal ground. It will have 50 KV capability, 75 mA average (250 mA pk), with a stability of 5 x 10^{-4} or better over a 7 ms pulse length. Regulation recovery time should be less than 10 μs with a 100 ms interrupt period (adjustable) following a load short. The supply will probably be pulsed at 36 pps.

Cryogenic pumping may be utilized at several pumping stations; first, close to the ion source and second, along the beam trajectory, in order to keep the physical size of the vacuum system down and to recycle of expensive, isotopically pure gases. The Pasyuk ion source may not need to be cryogenically pumped should this source not be used regularly for gaseous ionization. Valves may be needed to isolate cryogenic pumping surfaces from the ion source chambers, thereby allowing for rapid source change. Source changes for the more difficult ions could be as often as every eight hours at 25% duty factor. Two or more small turbo-molecular pumps will be used for alternate pumping and for additional pumping of hydrogen and rough-down, probably without valve isolation. One gate valve will be located between magnet and column.

The following terminal power distribution is anticipated:

Magnet	20 kW
Source(s)	20 kW
Extractor	5 kW
Quadrupoles	10 kW
Electronics	12 kW
Cryo (10 w)	8 kW
	75 kW

B 2.3 <u>High Voltage Terminal House</u>

The high voltage terminal house will be required to operate at 750 kV. By selecting clearances of 7 feet minimum dimension from the

terminal house to the ground walls, using 10.75 feet long graded column support legs, and rounding the corners of the terminal house to a 1.5 foot radius, this modest voltage gradient is achievable using ambient air as the insulating gas. The over-all terminal dimensions are 10 ft. by 16 ft. by 13.5 ft. high. The metal skin will be aluminum sheet stretched over a steel skeleton framework. The house will be divided by an intermediate deck separating the source, power supplies, electronics, and easily accessible upper area from a utilities basement area that is approximately 4.5 ft. high. This lower area will house the large mechanical equipment, heavy alternators and generators and power distribution equipment, large transformers, or other large components requiring infrequent service.

The terminal house and support structure is designed for a total load of 24,000 lbs. There will be four 14" O.D. vertical support columns (legs) made of filament wound fiberglass-epoxy tubes with an 0.5" wall thickness. The legs are 10.75 ft. long, and will be individually graded to provide a current drain of approximately 1-10 μA each for 750 kV on the terminal.

An elevator work platform will be installed to provide convenient access and work space around all sides of the high voltage terminal house. It will be suspended by 1 1/2" diameter ball screws on the four corners and will be lowered to the basement area when not in use. The platform is designed for uniform loading of up to 60 p.s.f., or concentrated loads of up to 2,500 lbs., with a combined total working load of 4,000-5,000 lbs. allowed. The elevator system will be motor driven, with the motor, ball nut jacks and drive shafts mounted beneath the platform.

B 2.4 Terminal House Utilities

Power requirements for the terminal house power supplies (ion sources quadrupole bending magnet, etc.) are not yet well defined, but are briefly mentioned in Section B2.2.

Power will be supplied to the terminal by an insulated drive shaft. A 125-150 hp., 1,800 r.p.m. motor will be located in a pit in the floor beneath the terminal house and a vertical 8-10" OD by 0.5" wall thick filament wound epoxy tube drive shaft will transmit the power to 2 generators in the high voltage terminal (a 60 Hz generator, rated at approximately 65 KVA and a 400 Hz unit, approximately 25 KVA). Both the motor and the 2 generators will have vertical axes to eliminate the need for right angle drive gear boxes. This will solve many of the problems we have encountered with the present injector motor drive shaft system.

The cooling system will be patterned after the unit in our present injector. Freon-113 will be used as an insulating coolant, and it will be pumped from ground potential to high voltage through 2-1/2" insulating plastic tubes (probably nylon or delrin). The pump, storage tank, heat exchanger, controls, etc. will all be located outside the injector enclosure for convenient access. Flow rates of 30-40 g.p.m. and a pressure differential of 40-50 p.s.i. should be adequate for all terminal house cooling needs.

The vacuum system for the ion source chamber magnet and accelerating column will probably utilize turbomolecular pumping. The chambers have not been sized and ion source gas loads are not specified, so no actual design has been started. The mechanical roughing pumps required for the system will be located in the house basement utility area. A cryogenic refrigeration system may also be required to recover expensive rare gases used to form the primary arc.

B 2.5 Accelerating Column

The ions leaving the source are charge-state analyzed by the source magnet and are then accelerated by the high-voltage column. The accelerating potential is provided by the Cockcroft-Walton power supply normally operated in the 500 to 750 kV range. The accelerating column assembly consists of three high voltage accelerating modules, a plastic shroud to contain an insulating gas, and the various support assemblies.

The assembly is similar to the design used at the LAMPF facility.[6]

The accelerating modules are a commercial product, a special design by NEC presently used in the Adam injector. Three of these modules will be stacked together, with 1.5 inch spacers between the three sections. Each of the two spacers contains a 4 cm diameter aperture whose purpose is to reduce electron and ion backstreaming. This spacer shoud be made of a refactory material to prevent damage from beam missteering. The column modules will be graded by a chain of resistors whose current drain is at least 1 mA. The voltage difference between each ring will be constant, and the axial field will be uniform except in the spacer regions. At the ends of the module assembly an additional guard ring will be needed to reduce the external electric field to a safe value.

To hold 750 kV across three modules, the column module assembly will be contained in a SF_6 atmosphere at ambient pressure. The SF_6 is contained within a clear plastic shroud 1.2 m in diameter and approximately 2.13 m long, the terminal-wall spacing. The shroud will be graded both inside and out. Ports on the plastic shroud allow access to the accelerating modules. The shroud will be SF_6 tight, with a cooled, filtered recirculation system to remove heat.

The three accelerating modules will be under compression within the shroud between two spun nosecones and a compression bellows. No additional support struts or electrical conductors are present in the SF_6 region. Evacuated pipes transport the beam to and from the column. The entrance beam line will contain a series of electrostatic lenses and is approximately 20 cm in diameter. The exit beam line is 6.3 cm in diameter and will have a magnetic quadrupole doublet located 1 meter downstream of the column exit.

B 3 INJECTION BEAMLINE AND ISOTOPE ANALYSIS

The injection beamline consists of two sections. The first section provides transport between the Cockcroft-Walton pre-injector and the Wideröe linac and provides for complete isotope separation by magnetic analysis. This line is comprised of four sets of quadrupole doublets, horizontal and vertical steering magnet pairs, a 90° analysis bending magnet, various beam probes and instrumentation, and a buncher. The second transport section joins the Wideröe and pre-stripper linacs and is comprised of quadrupole doublets and singlets, trim magnets, vertical bending magnets, and a fluorocarbon stripper.

B 3.1 Quadrupole Magnets and Power Supplies

A total of 8 sets of quadrupole doublets and triplets (18 magnets) will be used in the beam transport lines. Four sets of doublets are to be used in the low energy section to match the ion beam from the pre-accelerator to the Wideröe linac, and two doublets and 2 triplets in the medium energy line from Wideröe to the pre-stripper. The quadrupole elements will be the same as those standard units already in use throughout the cave area. These quadrupoles are compact high gradient magnets that have been very efficient and reliable in service. The design parameters are listed below for each element:

Magnet Bore, ID:	2.50"
Magnet OD:	12.0"
Pole Length:	6.0"
Overall Length:	approx 9"
$B'L_{eff}$:	42 kG
Current:	225 Amps
Voltage:	20 Volts
Power:	4.5 kW
Water:	2 gpm

We will also continue to use the 250 amp (5 kW) Rowan Power

supply units that have become standard throughout the SuperHILAC.

B 3.2 Dipole Magnets and Power Supplies

Three bending magnets are used in the injection transport line. The first, a 90 degree bend, turns the beam from the Cockcroft-Walton pre-injector to the Wideröe axis. As the ion beam is bent through the 90 degree angle, the isotopes are spread out and a single isotope may be selected with a mass discrimination of 1 part in 300. The other two dipole magnets will be in the line between the Wideröe and the pre-stripper tank and provide the vertical displacement required at the pre-stripper entrance. These magnets will be of a compact tape-wound coil type construction. The three new power supplies will be identical in design and similar to four other power supplies already built and in use elsewhere in the machine.

Preliminary design parameters for the first magnet, the 90 degree analysis dipole, are shown below.

Beam rigidity, R:	8.6 kG-m, 338.5 kG-in
Gap:	1.50" clear, 1.625" to poletips
Width:	3.0"
B_o:	15.0 kG.
ρ :	22.5"
L_{eff}:	35.448"
I:	450 amps
N:	120 turns
V:	approx 28 v
α:	30° edge angle
Water cooling:	approx. 4 gpm @ 40 psi differential

The second 2 bending magnets are used to bring the beamline vertically downward to the proper angle (+5°) and elevation for the pulsed switching magnet at the pre-stripper entrance. The actual bend angles to be used for this displacement have not been established

since the actual arrangement of the elements isn't optimized yet, but they are expected to be approximately 25-30°. For this range of angles, typical parameters may be approximately as follows:

Beam rigidity, R:	10.5 kG-m, 413 kG-in (stripped)
Gap:	1.5 - 2.0" clear
Width:	approx. 3"
B_o:	12-15 kG
I:	450-500 amps
V:	30-40 volts

B 3.3 Trim Magnets and Power Supplies

A series of horizontal and vertical trim or alignment magnets will be provided in the injection beamline to permit small steering corrections to be applied to the beam. These units are DC magnets but are run from bi-polar power supplies. The magnet elements will be the same as units presently being used in the experimental area. A trim magnet set consists of one each horizontal and vertical magnet contained in a common yoke with overall dimensions of 9" x 9" x 15" long.

The magnet pair is approximately 18" long overall, and is run only with ambient air cooling. Each element is summarized below:

Steel:	Gap:	2.600"
	Pole length:	5.90"
	Effective magnetic length:	7.70"
	B_o:	817 gauss
	$B_o L_{eff}$:	6,290 G-in
Coil:	Current:	6.1 amps maximum
	Voltage:	18 volts
	Power:	110 watts
	Temp. rise:	60° C (air cooled)
	Conductor:	#13 Awg. square copper wire
	Number turns:	720 turns/coil

B 3.4 Buncher

The buncher, located 1.5 m upstream of the entrance of the Wideröe will consist of a double gap line-type cavity similar in concept to the units used at the SuperHILAC. The operating frequency is 23.4 MHz and an energy spread of about 1.5% will be added to the beam.

The buncher will consist of a 50 ohm quarter-wave stub, 2.5 meters long, and 10 cm in diameter loaded by a drift tube at the ungrounded end. There will be two .5 cm gaps, spaced by 3.7 cm. The beam radius at the buncher is 2 cm, requiring that the buncher aperture be at least 5 cm in diameter. At any diameter greater than about 2 cm, the non-linear effects due to the fringing field are large, so the gaps will be gridded in much the same way as the present bunchers with thin tungsten bars. These bars will dissipate 10-20 watts at maximum beam intensity and will be radiation cooled. The gap can be lengthened without any undersirable effects if grid emission limits the voltage.

The voltage on the drift tube is 5-10 kV. An insulator, located near the drift tube will center the inner conductor and provide vacuum isolation. The power will be coupled into the structure from a pick-off loop located in the Wideröe tank; the buncher will be tightly coupled to the Wideröe to reduce the effects of mistuning. The phase will be adjusted by moving the buncher along the beam line by ± 2 cm. The power requirement is several kW for stainless steel walls.

The buncher will be water cooled on the inner conductor and drift tube. The maximum temperature rise at any point is less than 20°C, resulting in only a negligible gap misalignment due to thermal expansion of the structure.

B 3.5 Stripper

The stripper following the Wideröe raises the mean charge state of the beam so that acceleration can continue in the first tank of the SuperHILAC. The beam is analyzed in the transport line following the

stripper to select the charge state required. The stripper material is a fluorocarbon vapor of high molecular weight at a pressure of about 1 Torr evaporated from a resevoir of liquid. This type of stripper imposes no limit on the beam power and is a low maintenance item. Carbon foils, usually used as strippers, are not generally practical here as they must be very thin in order to reduce the energy and angular spread of the beam and are thereby delicate and sensitive to burnout. Fig. B-3 compares the charge state distribution of lead ions stripped by air, fluorocarbon vapor and a carbon foil.

The vapor stripper will consist of a heated reservoir of Fomblin Y-Vac-25/9 liquid electrically heated to no more than 200° C by a resistance heater. At the top of the reservoir a water cooled surface, thermally isolated from the reservoir, will condense the vapor back into the heated bath. Thermocouples will monitor the temperatures of the bath and the cooled condensor, along with the liquid level. The liquid level will be topped up at roughly monthly intervals.

To reduce the creepage of liquid along the supports of the stripper assembly, a portion of the support will be cooled to LN temperature. A LN baffle will also be located near the entrance and exit ports of the stripper to condense some of the escaping vapor, reducing the load on the vacuum system. The stripper will be located in its own beam line box with an oil diffusion pump.

The aperture diameter of the stripper is 1 cm. A cooled beam scraper will be located upstream of the stripper to protect it from missteered beam or halo. At maximum intensity the average beam power form the Wideröe is almost 10 kW and would inflict damage if it hit either the stripper or a drift tube in the Alvarez machine.

B 3.6 Vacuum System

The vacuum pumping stations for the injection beamlines will be identical to those already being used throughout the SuperHILAC

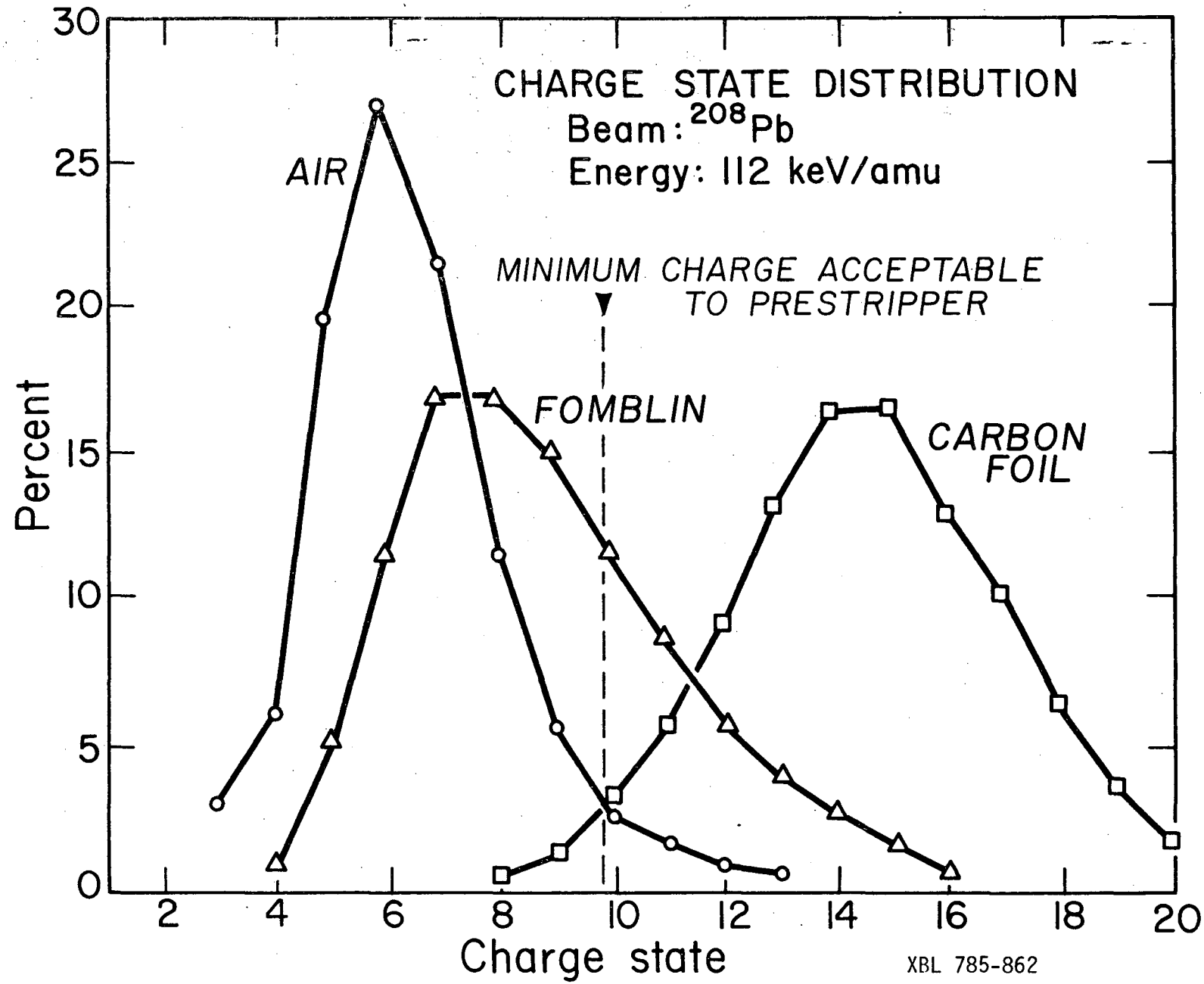

Fig. B-3. Charge state distribution for ^{208}Pb ions at 112 keV/amu stripped by air, fluorocarbon vapor (Fomblin) and a carbon foil. Fomblin strips 12% of the beam to the minimum 10+ charge state required by the pre-stripper, and is not limited by high beam intensity as is the carbon foil.

experimental area: the standard unit consists of a 4" vacuum gate valve (VRC model 94576-106, 5.38" dia. port), a 4" diffusion pump (T-M vacuum products model 441), and a backing mechanical pump (Welch model 1397B). The mechanical pump also serves as the roughing pump for the system. The diffusion pump features a built-in optically dense cooled baffle and rapid heat/cool cycles due to a totally immersed ribbon heater element design. The 4" model has a rated pumping speed of 680 l/sec.

The fabricated control boxes include an operator push button panel, panel gauges and interlock status indicators. These standardized boxes will be located at each pumping station for convenient operator usage. There will be a total of five separate pumping stations provided in the injection beamlines.

The anticipated vacuum level in the beam lines is expected to be in the middle 10^{-6} Torr range. Although most beamline components are fabricated of stainless steel or aluminum and careful fabrication and cleanliness procedures are carried out, the use of a large number of elastomer gaskets and sliding shaft seals for probes and instrumentation devices creates a large gas load and results in these typical vacuum levels. These ranges are considered adequate for the transport lines.

The five beamline pumping systems are separated along the injection line by large port beamline gate valves. These valves (VRC Model 94579-101 with modified flanges and bolt patterns) have a 3.38" dia. clear port. Control and interlock boxes are installed on each valve to permit clear indication of open or closed position as well as to provide a control switch to either operate the valve under local manual or computer control.

The pumping chamber used as a part of pumping system is a fabricated aluminum box which also provides standardized ports or windows for the installation of beamline probes or plunging devices. These boxes are also common throughout the experimental area and permit

standardization of probes and monitoring equipment and rapid interchangeability of instrumentation. All modules for beam stops, TV scintillator paddles, faraday cups, slits, collimators, etc. are mounted on these 4"x9" port covers.

B 4 LOW VELOCITY LINEAR ACCELERATOR

The principal requirement of the injector system accelerator is that it accelerate U^{5+} from a kinetic energy of 15.8 keV/amu to 113 keV/amu.

The Wideröe is a π mode structure that in recent designs used elsewhere includes focusing quadrupoles in the drift tubes. Versions of Wideröes are currently in operation at Manchester, at Orsay, and now at the UNILAC in Darmstadt. The UNILAC design solves the difficult problem of quadrupole alignment by placing the quadrupoles only in the even-numbered drift tubes mounted directly on the tank wall. The odd drift tubes are mounted on an inner support which is driven to high rf voltage.

In the Wideröe structure for very low-velocity particles, the spacing between drift-tube gaps, $\beta\lambda/2$, becomes so small as to make quadrupoles unrealistically thin. However, the longitudinal phase advance from gap-to-gap can be any odd multiple of π, and a $\pi - 3\pi$ sequence of alternating gap-to-gap lengths produces a satisfactory solution to the drift-tube length problem.

In a $\pi - 3\pi$ machine, where the quadrupole length is $\beta\lambda$ long, the required gradient is less than 15 kG/cm for an operating frequency below 30 MHz. Accordingly, we select as the operating frequency 23.4 MHz, which is the third subharmonic of the SuperHILAC. The frequency of the UNILAC Wideröe is 27.12 MHz, with about the same input particle velocity.

B 4.1 Wideröe Linac Tank

The Wideröe tank will be 5.17 meters long with a 134 cm inside diameter, and will contain a total of 35 drift tubes including 2 half-drift tubes on the end walls. The 16 long outer drift tubes are fastened to the outer wall of the tank and contain quadrupole magnets in a FODO sequence to permit focusing the beam during acceleration. The 17 short inner drift tubes, mounted on the inner coaxial conductor, do not contain quadrupoles. Fig. B-4 shows a section view of the Wideröe linac.

The tank will be fabricated from 1/2 inch nominal 10% copper clad mild steel plate by essentially the same method as used in constructing the Alvarez tanks at the SuperHILAC. The clad steel plates will be rolled to the desired diameter and seam welded with steel and copper welds. The steel end flanges will be welded to the copper clad steel tank cylinder. The steel end walls which are bolted to the tank will have copper sheets fastened on the inside face for good rf conductivity. Sealing between the tank and end walls will be accomplished by O-rings for vacuum and gold rings for rf contact. The tank will have three flanged stub ports in addition to various pump-out and instrument ports. Tank wall cooling will be by means of aluminum extrusion tubes compressed around the tank perimeter, a method which has worked successfully for the Alvarez tanks at the SuperHILAC.

The Wideröe tank will be supported on two structural beams mounted beneath the existing injector deck, and will lie above and to the rear of the present Dynamitron injector pressure vessel (Adam). The beam line in the tank (center of drift tubes) will be four feet above the injector deck which has an elevation of 859 ft. 1 inch. In order to provide sufficient clearance above the Adam pressure vessel the stub lines of the Wideröe linac will point up instead of down as at GSI.

Four support legs bolted to both end flanges will carry the load of 30,000 lbs. of the fully assembled Wideröe linac. The support legs will be adjustable in both the vertical and lateral direction to provide alignment for the tank. The drift tubes are aligned separately. For vertical adjustment a worm gear jack arrangement is considered.

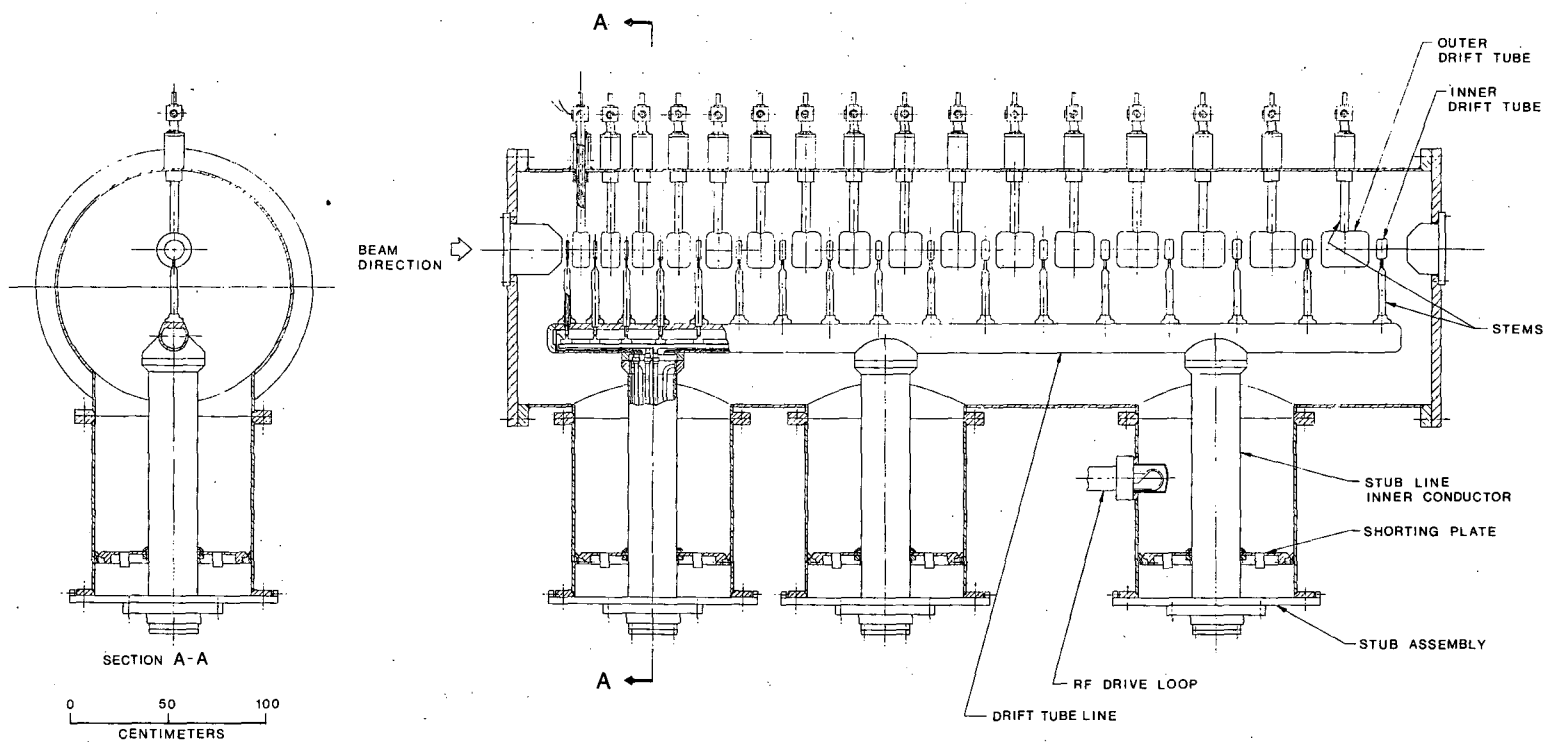

Fig. B-4. Wideroe Linac.

XBL 785-8684

Wideröe Parameters

Structure

Input energy	15.8 keV/amu
Output energy	113 keV/amu
RF power requirement	120 kW peak RF
Frequency	23.4 MHz
Line voltage	100-250 kV
Sequence	π-3 π
Length	5.17 m
Diameter	1.34 m
Number of stubs	3
Number of drift tubes	35

Focusing

Number of quads	16
Sequence	FODO
dB/dr	11.0 - 4.8 kG/cm

Accelerating Gaps

Gap/Length	2.41 - 4.47 cm
Gap field	55-65 kV/cm
Aperture radius	.8 - 1.5 cm
Transit time factor	.65 - .85
Stable phase	-30°

B 4.2 Support Stubs and Inner Conductor

The Wideröe tank has three inner and outer stub lines with three movable shorting plates.

Stub Line Outer Conductors

The outer stub lines are 122 cm long and have an inside

diameter of 90 cm. They will be fabricated from 1/2 inch nominal 10% copper clad mild steel plate rolled to the desired diameter and seam welded with steel and copper welds. The steel end flanges will be welded to the copper clad steel stub cylinder. The outer stub lines are bolted to the stub ports in the tank wall and sealed by O-rings and gold rings. A knife-edge type rf contact between the coupled flanges is optional.

The steel top flange bolted to the outer stub line provides mechanical support for the inner stub line and the shorting plate. Each outer stub line will have a port in the wall for the tuning loop. The third outer stub line will also contain the rf driver loop. Additional port holes will be located on the stub wall for cooling feedthroughs and hand access for adjusting the position of the shorting plate and providing and O-ring vacuum seal around the inner stub line.

Stub wall cooling will be by aluminum extrusion tubes compressed around the stub perimeter similar to the proposed tank wall cooling method.

Stub Line Inner Conductors

The inner stub lines are approximately 2.0 m long and have an outside diameter of 39.11 cm. The stub lines will be constructed of steel tubes which are copper plated on the outside.Steel flanges will be welded to both ends of the copper plated tube, the bottom flange being 44 cm in diameter.The wall of the inner stub line will be cooled by water flooding the concentric space between the wall tube and an inner cooling tube.

Main Tank Inner Conductor

The inner conductor, on which the short inner drift tubes are mounted, will be fabricated in three sections and will be fastened together with two connecting spools. The total length will be 4.69 m.

Each section will be constructed of two concentric steel tubes, either round or rectangular, with an effective outside diameter of approximately 16.5 cm. The tubes will be cut on the bottom side along their length and will be welded to a rectangular steel flange. A round steel flange which mates with the bottom flange on the inner stub line is also welded to the top of the tubes. A rectangular steel flange which a repairable welding procedure for rf contact is also under consideration supports the inner drift tubes will be bolted to each welded tube assembly with an O-ring for vacuum sealing. A gold ring on the outer edge of the flange will provide rf conductivity. All outside surfaces of the inner conductor will be copper plated.Water cooling will be provided to the inner conductor wall in the space between the two tubes.

For mechanical support the inner conductor will be bolted to the bottom flange of the inner stub line with O-ring sealing and gold ring or knife-edge contact. The location of the inner conductor is off center inside the tank. The location of the stub lines from the front of the inner conductor is as follows:

Stub 1	44 cm
Stub 2	177 cm
Stub 3	357 cm

Shorting Plate

Each stub will have a movable shorting plate located between the inner and outer stub line which controls the gap voltage profile and resonant frequency of the structure. The approximate distance of the shorting plate from the inner conductor is 111 cm. The shorting plate is fabricated from copper plate with copper cooling tubes soldered on the back side. Since the current density at the inside edge of the shorting plate and the inner stub line is very high, about 61

amps/cm, excellent rf contact at this location is mandatory. A design under consideration would use standard electrical contact strips for low current prepositioning of the plate and copper strips pushed hard against the walls by means of clamps for the final position of the shorting plate. Another option might be the use of a flexible shorting plate welded inside the stub in its correct position.

B 4.3 Drift Tubes

The Wideröe linac will contain 33 drift tubes, plus two half-drift tubes on the endwalls.

Outer Drift Tubes

The 16 long outer drift tubes, which contain the focussing quadrupoles, will be mounted on the bottom side of the tank wall, allowing relative ease in providing power, cooling, and alignment. Each outer drift tube will be supported and adjusted from a single stem which contains both the coolant passages and magnet power leads.

The drift tubes are flooded with liquid Freon 113, which cools the magnet coils and the drift tube shells and stems. Since the drift tubes are supported from the bottom, the coolant passage has to be designed to prevent vapor buildup and decreased heat transfer in the shell.

The drift tube stems will be either welded or flange-bolted with O-ring and gold ring seals to the tank wall. A liquid cooled bellows on the stem will permit alignment of the drift tube similar to the method used in the SuperHILAC.

The shell diameter is 20.32 cm and the length of the stem is about 40 cm. The shells and stems are fabricated of copper plated steel.

Inner Drift Tubes

The 17 short inner drift tubes are flange-mounted and precisely aligned on the inner conductor which is suspended from the three inner stub lines. They do not contain quadrupoles. However, the shells and support stems have water cooling passage because they dissipate considerable rf power. Sealing of the stem flanges to the inner conductor is provided by O-rings and gold rings. The cooling lines for the drift tubes and inner conductor pass through the inside of the inner stub lines.

Alignment of the inner drift tubes on the inner conductor is provided by a support and alignment structure mounted on the top flange of the outer stub line.The shell diameter is 11.11 cm and the stem is about 40 cm long. The shells and stems are fabricated of copper.

Half-Drift Tubes

The two copper half-drift tubes, which do not contain quadrupoles, are mounted on steel flanges, which in turn are bolted to both tank end walls. The half-drift tubes can be aligned and are water cooled. The diameter is 20.32 cm, the same as the diameter of the outer drift tubes.

Drift Tube Schedule

The detailed drift tube schedule is shown on two tables containing the physical and electrical parameters for the linac.

Physical Parameters for Linac

Cell No.	g/L	Mode	L_{dt} (cm)	L_{gap} (cm)	Gap Center* (cm)	DT Center* (cm)
						24.000
1	.637	1	1.433	2.393	29.596	31.509
2	.626	3	9.797	2.542	33.497	39.667
3	.612	1	1.705	2.550	45.840	47.968
4	.599	3	10.884	2.679	50.160	56.941
5	.587	1	1.974	2.682	63.794	66.052
6	.575	3	11.913	2.790	68.435	75.786
7	.562	1	2.264	2.781	83.133	85.656
8	.550	3	12.966	2.879	88.228	96.150
9	.539	1	2.554	2.871	104.069	106.781
10	.527	3	14.020	2.956	109.536	118.024
11	.515	1	2.869	2.937	126.502	129.405
12	.503	3	15.091	3.009	132.345	141.395
13	.491	1	3.200	2.983	150.432	153.524
14	.479	3	16.145	3.040	156.643	166.236
15	.468	1	3.527	3.011	175.814	179.083
16	.457	3	17.133	3.056	182.375	192.469
17	.450	1	3.791	3.046	202.559	205.977
18	.450	3	18.004	3.158	209.452	220.033
19	.450	1	3.984	3.198	230.634	234.224
20	.450	3	18.936	3.321	237.876	249.005
21	.450	1	4.190	3.363	260.154	263.931
22	.450	3	19.912	3.492	267.772	279.474
23	.450	1	4.402	3.536	291.198	295.167
24	.450	3	20.879	3.664	299.199	311.471
25	.450	1	4.605	3.705	323.763	327.918
26	.450	3	21.787	3.825	332.133	344.939
27	.450	1	4.791	3.863	257.765	362.092
28	.450	3	22.605	3.972	366.473	379.761
29	.450	1	4.967	4.008	393.067	397.555
30	.450	3	23.454	4.120	402.098	415.885
31	.450	1	5.163	4.160	429.692	434.354
32	.450	3	24.406	4.286	439.078	453.424
33	.450	1	5.375	4.329	467.792	472.644
34	.450			4.453	477.557	492.383

*Measured from inside entrance flange

Electrical Parameters for Linac

Cell No.	T (KeV/amu)	V gap (KV)	E_{gap} (KV/cm)	TTF	Aperture (R cm)
0	15.76				.80
1	17.36	122.6	51.2	.718	.80
2	19.38	146.1	57.5	.761	.80
3	21.36	144.8	56.8	.750	.80
4	23.40	143.4	53.5	.783	.80
5	25.38	140.0	52.2	.778	.80
6	27.47	143.1	51.3	.801	.80
7	29.72	154.3	55.5	.802	.80
8	31.91	157.3	54.6	.766	1.25
9	34.20	166.3	57.9	.757	1.25
10	36.60	168.3	56.9	.785	1.25
11	39.06	173.5	59.1	.781	1.25
12	41.60	173.9	57.8	.804	1.25
13	44.15	174.4	58.5	.802	1.25
14	46.73	173.3	57.0	.820	1.25
15	49.26	169.3	56.2	.821	1.25
16	51.80	167.2	54.7	.834	1.25
17	54.36	168.6	55.4	.837	1.25
18	57.03	174.9	55.4	.841	1.25
19	60.02	194.2	60.8	.845	1.25
20	63.09	199.6	60.1	.845	1.25
21	66.41	214.0	63.6	.854	1.25
22	69.77	217.0	62.1	.849	1.25
23	73.26	223.0	63.1	.861	1.25
24	76.72	222.8	60.8	.853	1.25
25	80.17	219.1	59.1	.868	1.25
26	83.53	216.0	56.5	.855	1.25
27	86.79	204.8	53.0	.874	1.25
28	89.91	200.4	50.5	.857	1.25
29	93.32	213.2	53.2	.879	1.25
30	96.79	222.5	54.0	.858	1.25
31	100.81	249.2	59.9	.885	1.25
32	104.81	256.0	59.7	.859	1.25
33	109.20	271.4	62.7	.890	1.25
34	113.00	243.1	54.6	.860	1.25

B 4.4 Drift Tube Quadrupoles and Power Supplies

There are sixteen outer drift tubes in the Wideröe linac that contain focusing quadrupole magnets. These units are supported from the outer tank wall by a single vertical stem and both power and cooling lines are contained in the stem. The stem is supported, adjusted, and aligned outside the tank and movement is through a bellows seal.

The required strengths, apertures, and drift tube dimensions are very similar to one of the groups of magnets in the SuperHILAC prestripper linac. The tape-wound coils are fabricated from copper strip conductor and machined to provide pole tip openings. The magnet yoke also serves as the outer wall of the drift tube. The drift tube is flooded with liquid freon, which cools the magnet coil and the drift tube shells and stems. The drift tube lengths and aperture increase along the machine; the outer diameter will remain constant at 8.0". The magnets for these 16 drift tubes will be grouped into a few different types to minimize tooling and fixture costs and to lessen the number of spare components required. The first quadrupole group is generally the most difficult, since it will be shortest. A full-scale model of the first drift tube quadrupole is pictured in Fig. B-5.

Preliminary design parameters for this group are listed below:

Magnet Bore ID:	1.6 cm, 0.63"
Magnet OD:	8.0"
Pole Length:	2.87"
Overall Length:	3.9" min (DT #2)
$B'L_{eff}$	97.5 kG
Current:	240 amps
Voltage:	10 volts
Power:	2.4 kW
Cooling:	4-5 gpm, Freon-113

The drift tube quadrupoles also will be powered from our standard 250 amp supplies, and may be paired in series to run from one supply.

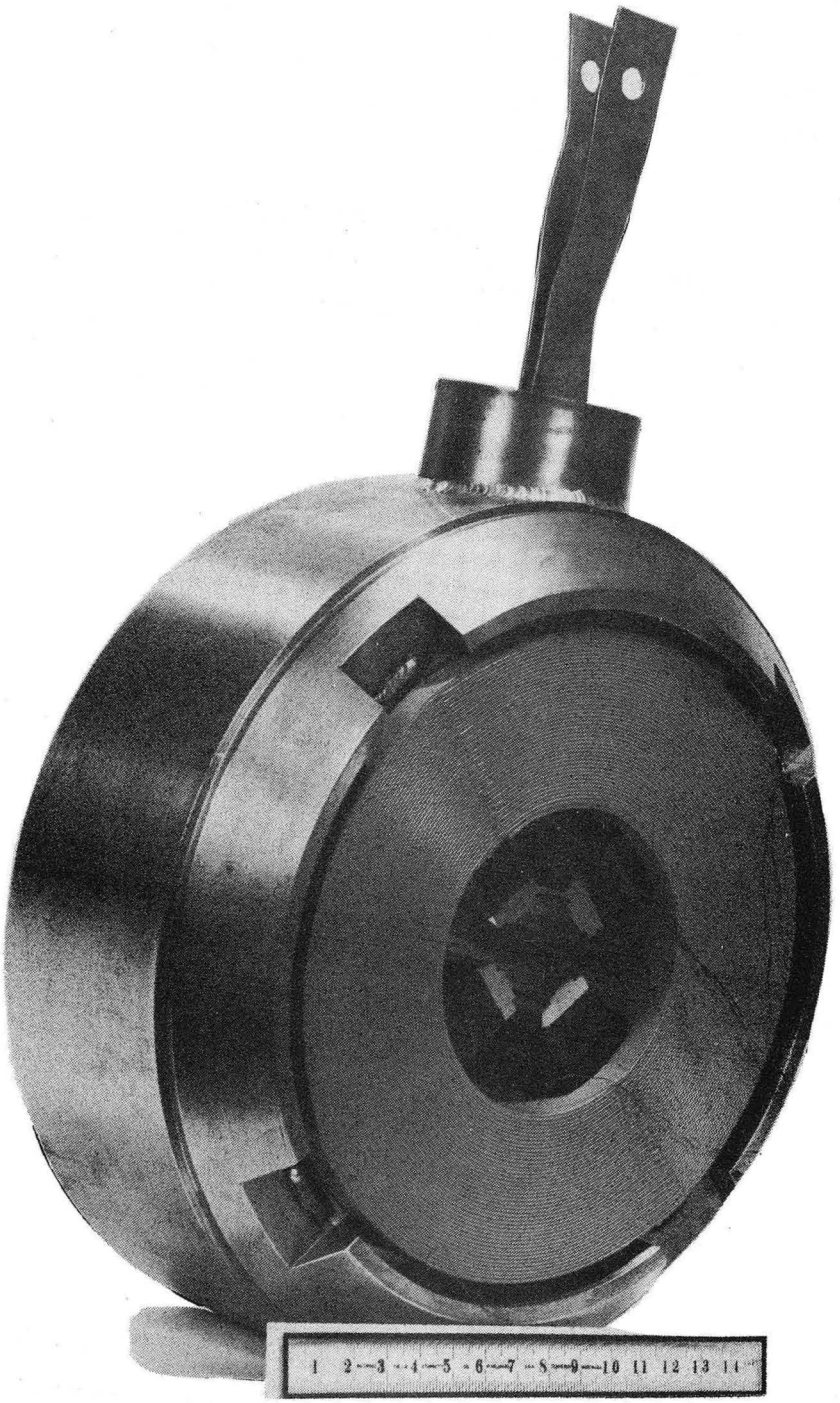

Fig. B-5. Full-scale model of first drift tube quadrupole.
CBB 785-5868

B 4.5 Cooling System

Two separate cooling systems are required for the Wideröe linac. One is a Freon 113 closed loop system, the other is a treated water supply.

Power Dissipation in Wideröe Linac

The power dissipation in the various elements of the Wideröe linac is based on a 50% duty factor and includes 10% joint losses. The power losses in the drift tube shells have been estimated to be 20% of the stem losses. Losses in the half drift tubes are considered negligible.

Outer drift tubes - quadrupoles	61.0 kW
Outer drift tubes - (16 shells & stems)	0.8
Inner drift tubes (17 shells and stems)	1.2
Tank wall	0.9
Inner stub lines (3)	15.5
Stub line shorting plates (3)	2.5
Outer stub lines (3)	6.7
Total power dissipation	95.2 kW

Freon-113 Cooling System

Freon-113 is used to cool the magnet coils and shells and stems of the 16 outer drift tubes.

The closed loop cooling system will consist essentially of two circulating pumps (one standby pump), one heat exchanger, a surge tank with a sight glass, a filter and a drier, supply and return manifolds, and various valves, pipes, tubes and fittings. The system will also contain temperature and pressure gauges, a flow indicator and alarm and interlock switches. Each drift tube will have a flow switch

and a balancing valve in the return line. Flow rates of 80 - 100 gpm and a pressure differential of 40 - 50 psi should be adequate for all outer drift tube cooling needs.

It would be advantageous from the cost standpoint to combine the Freon 113 cooling system for the terminal house and the system for the Wideröe linac into one larger cooling system with a total flow rate of 110-140 gpm and the same pressure differential of 40-50 psi. The proposed location of this combined system, outside the terminal house building addition and underneath the beamline from the terminal house to the Wideröe linac, is convenient to both devices.

Treated Water Supply

Treated water will be used to cool the tank wall, the inner drift tubes with the coaxial conductor, and the three stub lines with their shorting plates. Additional water cooling will be required by the two half drift tubes, the rf drive loop and the three tuning loops. Approximately 20-30 gpm of treated water will satisfy these cooling requirements and can be supplied by the existing system at the SuperHILAC.

B 4.6 Vacuum System

The vacuum requirements for the Wideröe linac are in the 10^{-7} torr region. The total copper surface exposed to the vacuum from the tank, stubs, inner conductor and drift tubes is approximately 33 m^2.

Two high vacuum pumping stations will be connected to the tank. Each station will contain a mechanical pump (500 l/min.), a turbo-molelcular pump (1,500 l/sec.), and a Tiball titanium sublimation pump besides the necessary valves, traps, piping, and instruments.

A third mechanical pump (500 l/min.) will be used to evacuate the space inside the three inner stubs and the inner conductor. This secondary vacuum will serve to protect the high vacuum in the tank in case of small water leaks in the cooling tube joints.

B 4.7 R.F. System

An overview of the RF system is shown in Fig. B-6.

Final Amplifier

We will use an EIMAC 4CW100K/8959 Running Class AB_2 in the final amplifier stage. This tube can deliver well over 200 kW in this mode, giving us ample reserve to supply cavity losses and an expected 20-40 kW beam loading. Running at 30% duty factor, we will have ample plate dissipation even when supplying reactive power to the beam load. In normal operation we will run at reduced filament voltage to extend tube life. It has been our experience that with filament voltage reduced to about 90% rated value we can expect over 50,000 hours (5-7 years) life on these types of tubes. A block diagram of the RF final amplifier appears in Fig. B-7.

Power Supply

The power supply for the final stage will be a stand-alone 12 phase oil-filled unit with taps to select 10, 15, 18, and 20 KV operation. The primary power will be taken directly from Bank 71, 480 V buss. The output will be connected to a small capacitor bank of about 100 μf for despiking and a shorting crowbar using 2 size "A" ignitrons. Using a separate stand-alone power supply for the Wideröe gives us maximum flexibility in operation and is very cost effective.

Driver

The driver stage will probably be a 4CX1500A or 4CW2000 also running class AB in a semi-linear mode. The low level stage will be an Amplifier Research Corp. (or equivalent) 10 watt solid state unit.

RF Control

Phase and amplitude modulation will be accomplished at the 0 dbm level. This will give us maximum flexibility for future dual beam operation and provide at least a decade of additional frequency

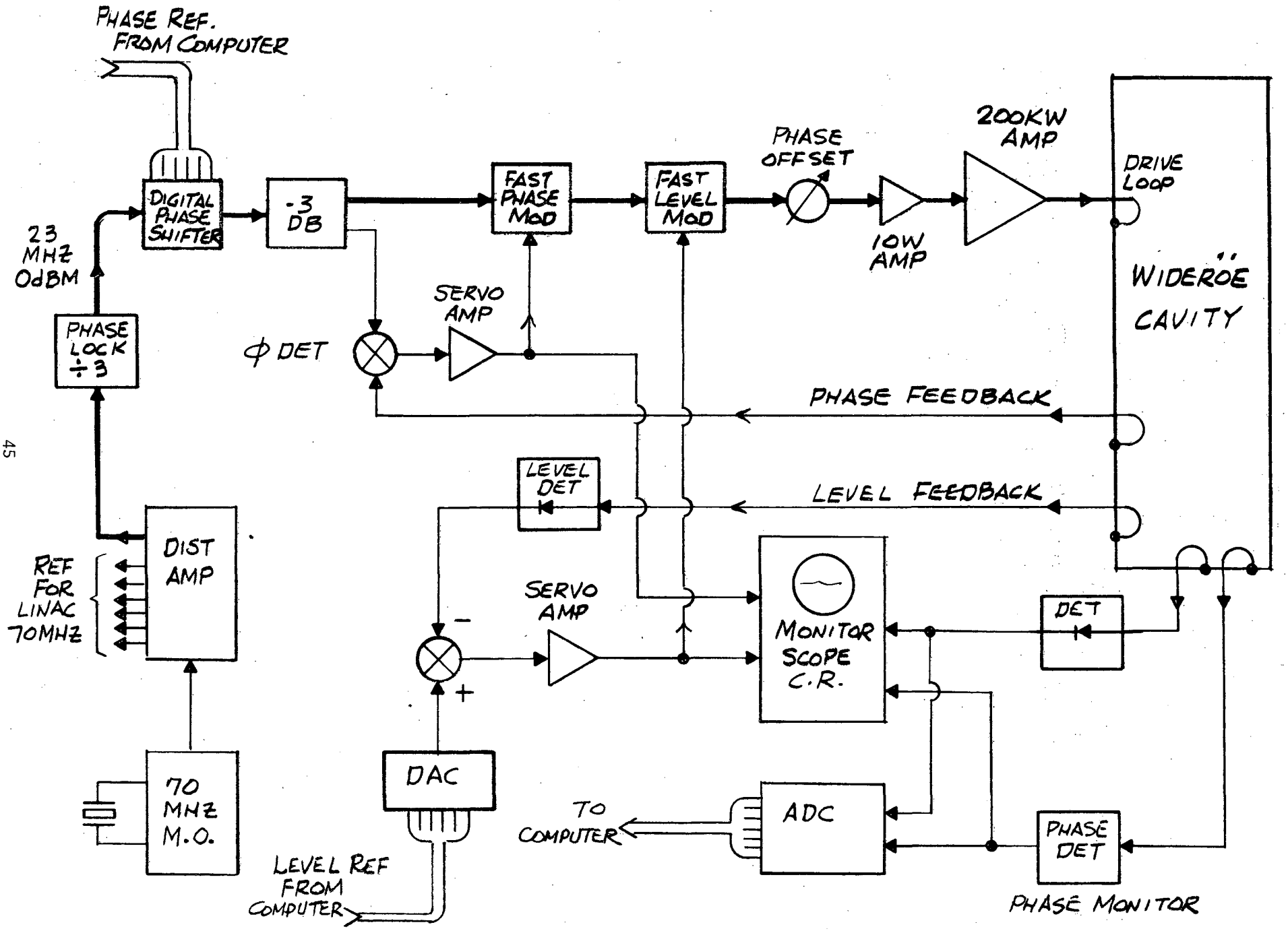

Fig. B-6. RF system with instrumentation.

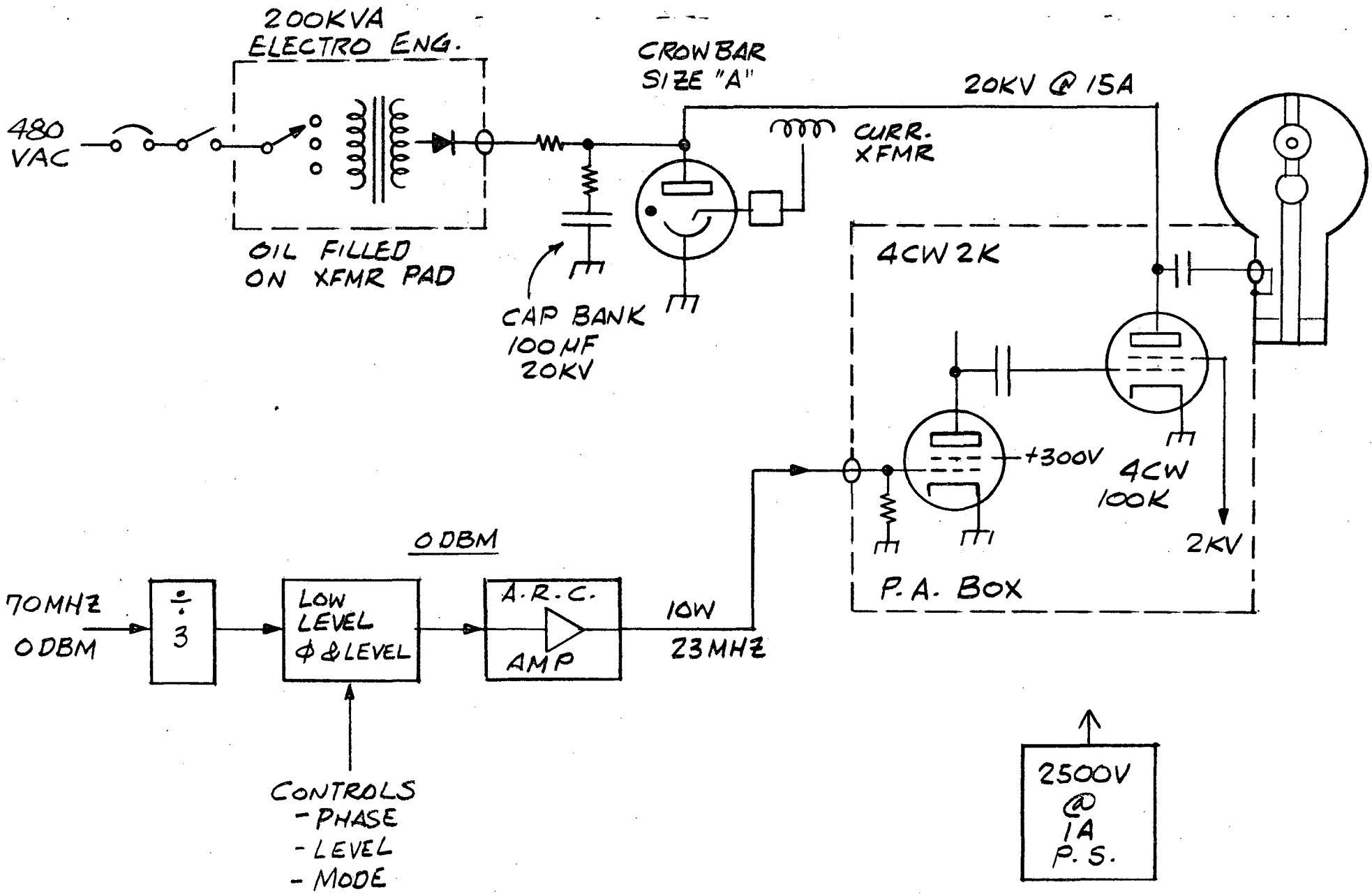

Fig. B-7. Main RF amplifier block diagram.

response over high level modulation. This additional bandpass will be required to overcome beam-induced rf instabilities due to the reactive nature of the beam loading, especially when running "noisy" beams (P.I.G. sources having typical 10 - 100 kHz modulation components).

The rf frequency control (see Fig. B-8) will use existing HILAC designs and components with only very minor modifications to adapt to the 1/3 frequency. The existing SuperHILAC frequency system has provisions for additional expansion to contain the extra channel. The detector and servo system will be a 2 wide NIM module complete with a 200 watt motor drive amplifier. The tuner itself will penetrate the vacuum with a single O-ring seal and be liquid-cooled. It will be driven with a low inertia printed armature servo motor and have a zero backlash gear reducer of the same design that has proven very reliable on the SuperHILAC.

It will be possible to operate and monitor all functions on the accelerator, both high level and low level, independently of the computer in local control from the equipment racks in "E" area.

B 5 SUPERHILAC AND CONTROL CENTER MODIFICATIONS

The computer control system of the Third Injector will allow operator control of the Cockcroft-Walton and its associated source parameters, the beamline into the Wideröe, the Wideröe itself and the beamline into the pre-stripper of the SuperHILAC.

B 5.1 Computer/Operator Control

A microprocessor based system of the "star" type will be provided, consisting of a number of I/O Microprocessor Modules (IOMM), a Multiplexor Microprocessor Module (MMM), and a Display Micro Module (DMM) shown in Fig. B-9. The system will be loosely coupled to the Modcomp IV (at least initially) to allow parameter save and restore features that

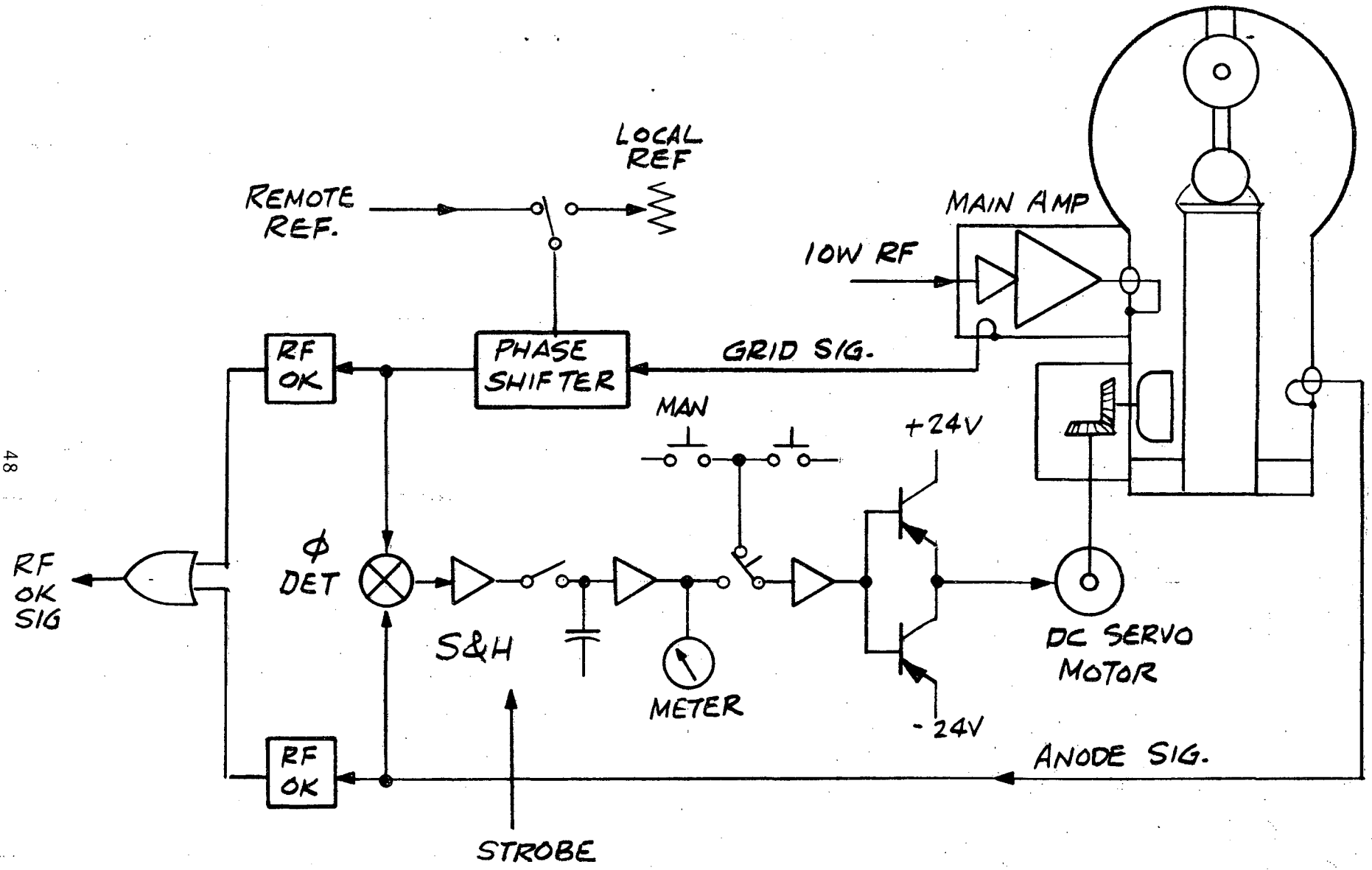

Fig. B-8. Frequency regulator block diagram.

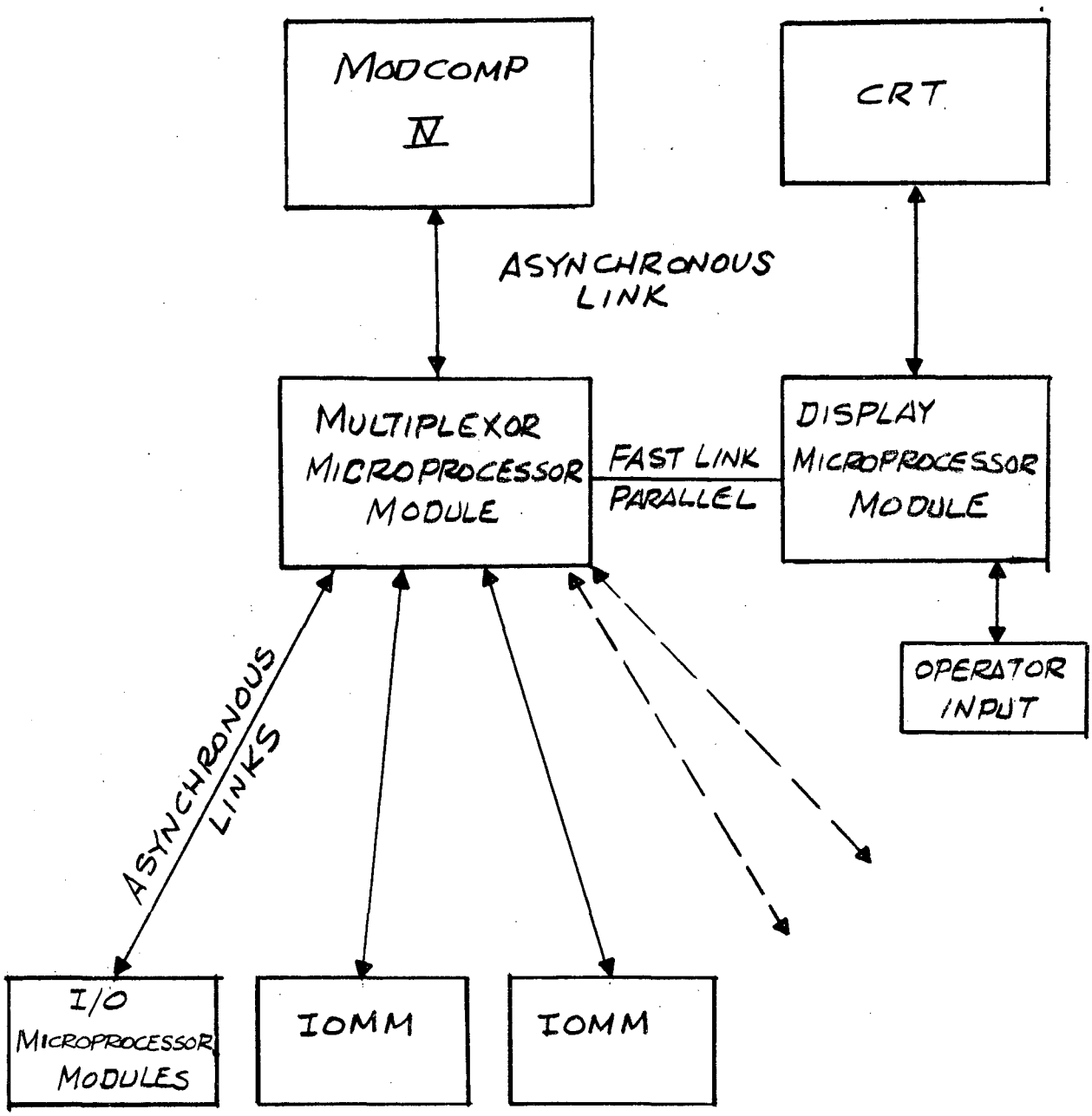

Fig. B-9. Microprocessor-based computer/operator control system.

are very important to accelerator operations.

Control would occur from a separate console dedicated to the Third Injector but modeled after the ones used to control the rest of the SuperHILAC. It would consist of a number of operator control knobs (the number undecided at this time), a keypad, a CRT and a push-button strip or touch panel for menu control.

Because of the loose coupling to the Modcomp IV, a stand-alone (ie. independent of the IV) mode of operation would be feasable. Initially no control would be possible from the Modcomp system, this could be remedied later on when a reasonably fast link to the IV can be developed. In the future local control could be implemented at the IOMM level allowing easier debugging of real-time hardware.

The basic building block of the computer control system is the the Microprocessor Module consisting of an 8 slot Intel card-cage. Each card-cage has its own power supply and an Intel Multibus backplane with the ability to hold a mixture of Intel compatible CPU and Analog/Digital or display boards (up to 8).

The I/O Microprocessor Module

The IOMM would contain in addition to the appropriate number of analog and digital I/O boards at least 2 CPU boards. The CPU boards would take care of communication with the MMM and also handle local chores such as control of the real-time I/O, closed loop control, filtering etc. Since each IOMM is in fact an intelligent real-time I/O controller, local control via a portable CRT could be possible. This feature could be implemented when funds become available.

Each IOMM would handle a modest number of Analog Control/Monitor functions (approximately 16 each) and about 60-80 digital parameters. Since the total system requires between 60-80 analog

variables and 200-300 digital parameters, this would dictate the use of 4 to 6 IOMM's.

The Multiplexor Microprocessor Module

The MMM would handle data communication with the IOMM's, the Modcomp IV, and with the DMM(s). Links to the IOMM's and the Modcomp IV would be over relatively "slow" asynchronous channels (9.6 to 19.2 kbaud) that could be modularly up-graded in the future should system response so dictate. The MMM would contain 2-3 CPU boards for computation/control, and a number of Intelligent Communications Controllers (ICC) for data transfers to and from the IOMM's. Each ICC board can handle up to 4 IOMM's.

The Display Microprocessor Module

The DMM would handle the operator display and interface. It would take its data from the MMM via a fast parallel link and display it via a number of Intel bus-compatible alphanumeric or plotter boards. The system architecture allows for additional DMM's should future requirements so dictate.

The Control Console

The console would allow control and/or monitor (via lists) of all the pertinent elements of the Third Injector. (similarly to the present SuperHILAC control system). In addition a number of fast analog signals (for scope monitoring of the source or the Cockcroft-Walton) will be provided. A CRT driven by the DMM will provide the control list and associated menu. A number of knobs (with assign/deassign features etc.) will allow control of individual elements and curser control.

Control of the Cockcroft-Walton

Control of the C-W will occur via telemetry over fiber optic links. There will be a fast analog channel for monitoring of scope signals required for source operation. A slower digital link will allow

control/monitor of the "slower" analog or digital parameters. An IOMM may be placed in the high voltage terminal to accomplish this. This has not been definitely decided pending questions concerning the reliability of the IOMM in such an environment. A third link may provide timing signals for synchronization with the SuperHILAC/Bevalac pulses.

B 5.2 Instrumentation, Controls and Interlocks

Frequent changes of ion species and output energies during the normal SuperHILAC operations make it mandatory to include adequate facilities for rapid diagnosis of tuning problems. Scintillator paddles monitored by TV cameras and slitted faraday cups will be used to monitor the beam. They will be mounted upstream and downstream from the bend in the lines preceding and following the linac, and at other critical locations. Attenuators will also provided.

The signals and controls for this diagnostic instrumentation will be at an operator console in the SuperHILAC control room.

Controls will be provided in the SuperHILAC control room to operate all equipment necessary for Third Injector operations. In addition, local controls will be available at each piece of equipment for testing and trouble analysis.

Hardware interlocks will be provided to protect against overstressing of equipment. Personnel safety hardware interlocks will protect against hazardous conditions. Alarms, when appropriate, will reside in the SuperHILAC control room to give equipment status information. Software interlocks will only be used to protect components that are deemed expendable. Personnel safety will not depend on software interlocks.

REFERENCES:

1. F. M. Penning, Physica, 4, 71, (1937)

2. M. Von Ardenne, "Tabellen fur Elecktronen, Ionenphysik und Ukermikroskopie", VEB. Deutscher Verlag der Wissenschaften, Berlin (1956).

3. R. Keller, Intern. Conf. on Ion Implanation Equipment, 28, 31.8.78 Povo (Trento), Italy.

4. W. R. Baker, K. W. Ehlers, W. B. Kunkel, A. F.Lietzke, Proceedings of the Symposium on Ion Sources and Formation of Ion Beams, BNL. (1971) p. 145.

5. D. Clark, E. Zajec, Private Communication (1978).

6. Emigh et al, 1970 Proton Linac Conf, NAL, 1970, p. 1007

C. SUPERHILAC BUILDING ADDITIONS

C 1 INTRODUCTION

The building enclosures for the proposed High Intensity Uranium Beams project will be additions to the west end of the existing SuperHILAC (Building 71) totalling 1715 gross square feet divided among three elements of differing size and shape as follows:

Cockcroft-Walton Injector Enclosure. An 800 square foot (approximately 31 X 26 feet). concrete and steel structure conforming in appearance to the existing building and located near the present injector area of the SuperHILAC. It will be 100% air-conditioned, controlling temperature and humidity for the special equipment.

Beam Transport Deck. A 400 square foot open metal structure supported on steel columns and piers.

Power Supply Enclosure. A 760 square foot concrete and steel structure to house the power supplies for the new Wideröe linear accelerator.

The proposed new linear accelerator space will be provided within the existing building, and will require that the building be structurally modified in this area to support the accelerator equipment. These new additions to the SuperHILAC are basically equipment enclosures and will not provide space for offices, or locations for personnel over the number of staff presently in Building 71.

The existing roadway will undergo a minor modification in the vicinity of the west end of the existing building to accommodate the new building additions.

injector to the linear accelerator. The deck will be supported with steel columns and caissons.

The Power Supply Enclosure will consist of a concrete slab on grade, concrete grade beams, caissons, and steel frame with metal siding and roof deck.

The Wideroe Linear Accelerator Structural Support System will be located above an existing injector. This will require that modifications be made to an existing deck, and an additional framing system be built above the existing injector, utilizing the existing concrete walls for support.

Structural design for building elements of this project is based on LBL lateral force criteria which are more stringent than the latest Uniform Building Code. The foundation design is based on soils reports prepared for previous additions to the existing SuperHILAC Building.

C 2.3 Required Mechanical Utilities

All required mechanical utilities will be extended from existing systems in Building 71. Capacity of the existing systems is adequate for this additional increment. Cooling water requirements include treated water (TRW) and low conductivity water (LCW). Compressed air (CA) will be used to blow down and drain some water-cooled electronic equipment.

The Cockcroft-Walton Injector Enclosure will require TRW as condensing water for the internal refrigeration system and the air-cooling/dehumidifying water chiller. The Beam Transport Deck will require TRW for bending magnet cooling. The Power Supply Enclosure will require TRW and LCW for cooling and CA for blow down and drain. The Wideroe Linear Accelerator will require TRW for direct cooling and for cooling the secondary drift tube cooling system.

C 2.4 Heating and Cooling

No conventional air conditioning systems will be installed. The Cockcroft-Walton Enclosure will have a build-up air cooling and dehumidifying system consisting of an air handling unit, air filter unit, heating coil, cooling and dehumidifying coils, temperature and humidity control system, and water/glycol chiller. The Power Supply Enclosure will have roof mounted air exhausters for summer heat removal.

C 2.5 Fire Sprinklers

Dry pipe sprinklers will be installed in each enclosure. They will be supplied from an existing dry pipe system which includes all of the west end of the existing building except the high bay. The existing fire department connection for the west end of the building will be relocated next to the roadway.

C 2.4 Electrical

The estimated electrical power demand for the proposed building additions in the SuperHILAC area is as follows:

Lighting		6.0 KVA
Interior	4.5 KVA	
Exterior	1.5 KVA	
Convenience Receptacles		2.0 KVA
Building Heating, Ventilating, and Air Conditioning		40.0 KVA
Research Power		225.0 KVA
Total		273.0 KVA

The above power is available at 480 volt, 3 phase, 3 wire in the main switchboard at the SuperHILAC (Building 71).

D. BEVALAC TRANSFER LINE

To make full use of the SuperHILAC capabilities, the Bevalac Transfer Line must accommodate the heaviest full energy particles stripped to their equilibrium charge state (q/A = .29). To accomplish this, the magnetic rigidity limit in the transfer line must be increased from the present 10.3 kG-meters to 14.6 kG-meters.

The transfer line elements include 8 magnetic dipoles, 26 quadrupoles, 22 steering magnets and an electrostatic inflector. The inflector, steering magnets and quadrupoles are adequate for the higher rigidity, but the last two dipole magnets will have to be replaced. The beam will emerge from these two magnets into the electrostatic inflector at the same angle and position as it does now.

Fig. D-1 is a schematic diagram of the transfer line; the elements to be replaced have been accented.

To drive the transfer line magnets to the higher field values, increased power supply capacity is required. However, by rearranging the existing supplies, almost all of the magnet power supply requirements can be met. Two power supplies will have to be constructed. One for the BL02MV-BL04MV magnet combination at a power rating of 30 KW, and one for the BL07MH-BL09MH magnet combination at a power rating of 70 KW. Both of these power supplies will be of the SCR phase-controlled type recently designed for the SuperHILAC experimental area.

Higher current operation will require the installation of higher capacity electrical cabling in many magnets. Water cooling lines will also be added since a number of quadrupoles in the line are presently run so far below rated capacity that no water cooling is provided for them.

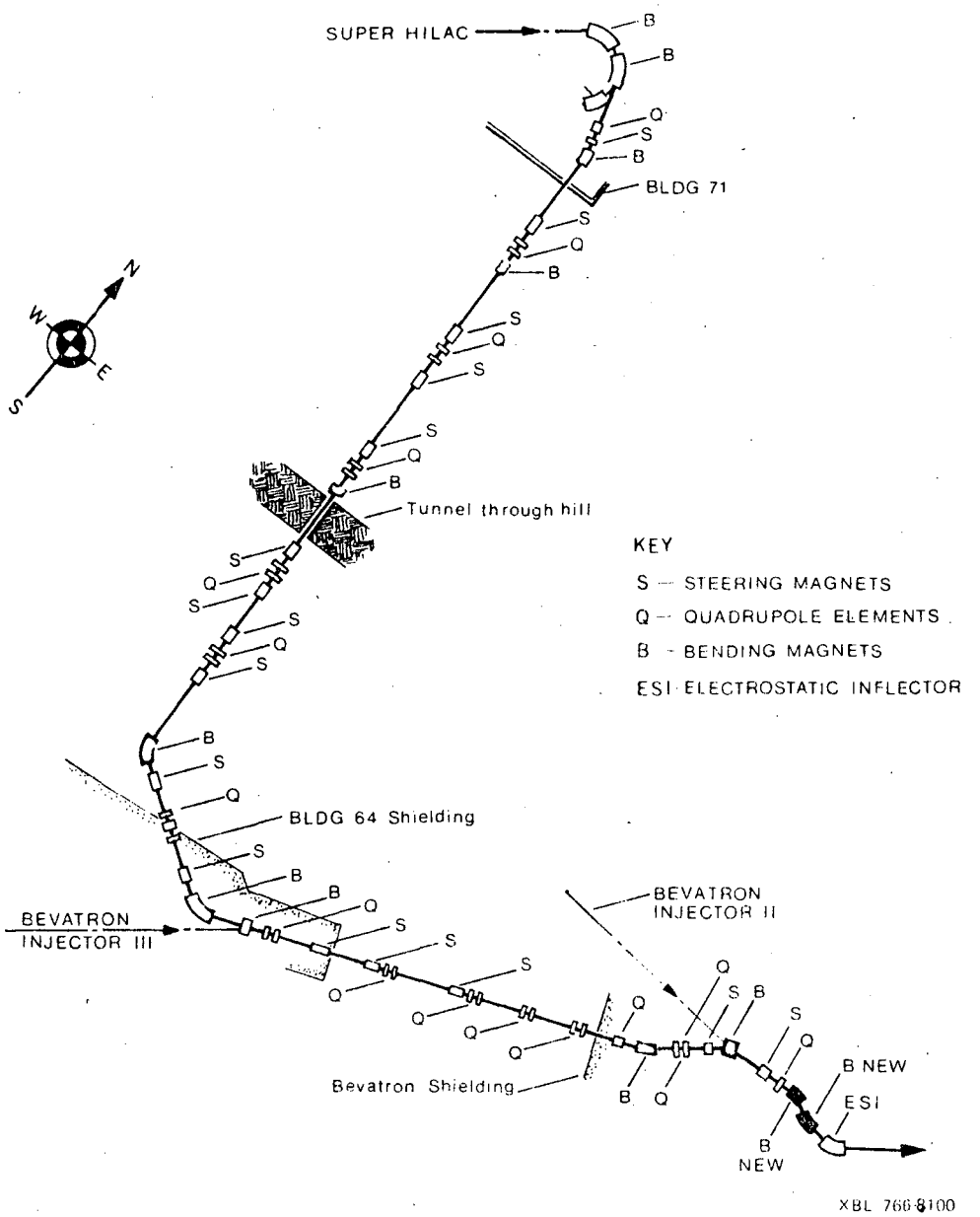

Fig. D-1. Schematic of Bevalac transfer line.

E. BEVATRON VACUUM IMPROVEMENT

E 1 VACUUM GOAL

The vacuum necessary to accelerate partially stripped ions in the Bevatron is highly dependent on the charge-exchange interactions of these ions with residual gas atoms, since any change in charge state will result in the loss of that ion from the beam. An evaluation of expected beam survivals in the Bevatron is shown in figure E-1. This graph is based on experimental measurements of electron pickup and loss cross sections for Ar, Kr and Xe ions at energy values around 8.5 MeV/amu. It is seen that 1×10^{-10} torr will provide a very comfortable safety margin for the survival of all ion species stripped at the SuperHILAC exit.

E 2 DESIGN APPROACH

Pressures in the Bevatron are now in the 10^{-7} torr range. To achieve a pressure of 1×10^{-10} torr requires a completely new and different vacuum system. A new vacuum tank with new internal components, all carefully cleaned for ultra high vacuum (UHV) service, combined with greater pumping capability than presently installed, will provide the required vacuum.

E 2.1 Vacuum Chamber:

A new all-metal ultra-high vacuum chamber will be built and placed within the entire circumference of the existing Bevatron vacuum chamber, as shown in Figure E-2. The bellows-type construction of the new quadrant (curve) tanks will be self-supporting against atmospheric pressure. No organic materials will be exposed inside of the UHV system

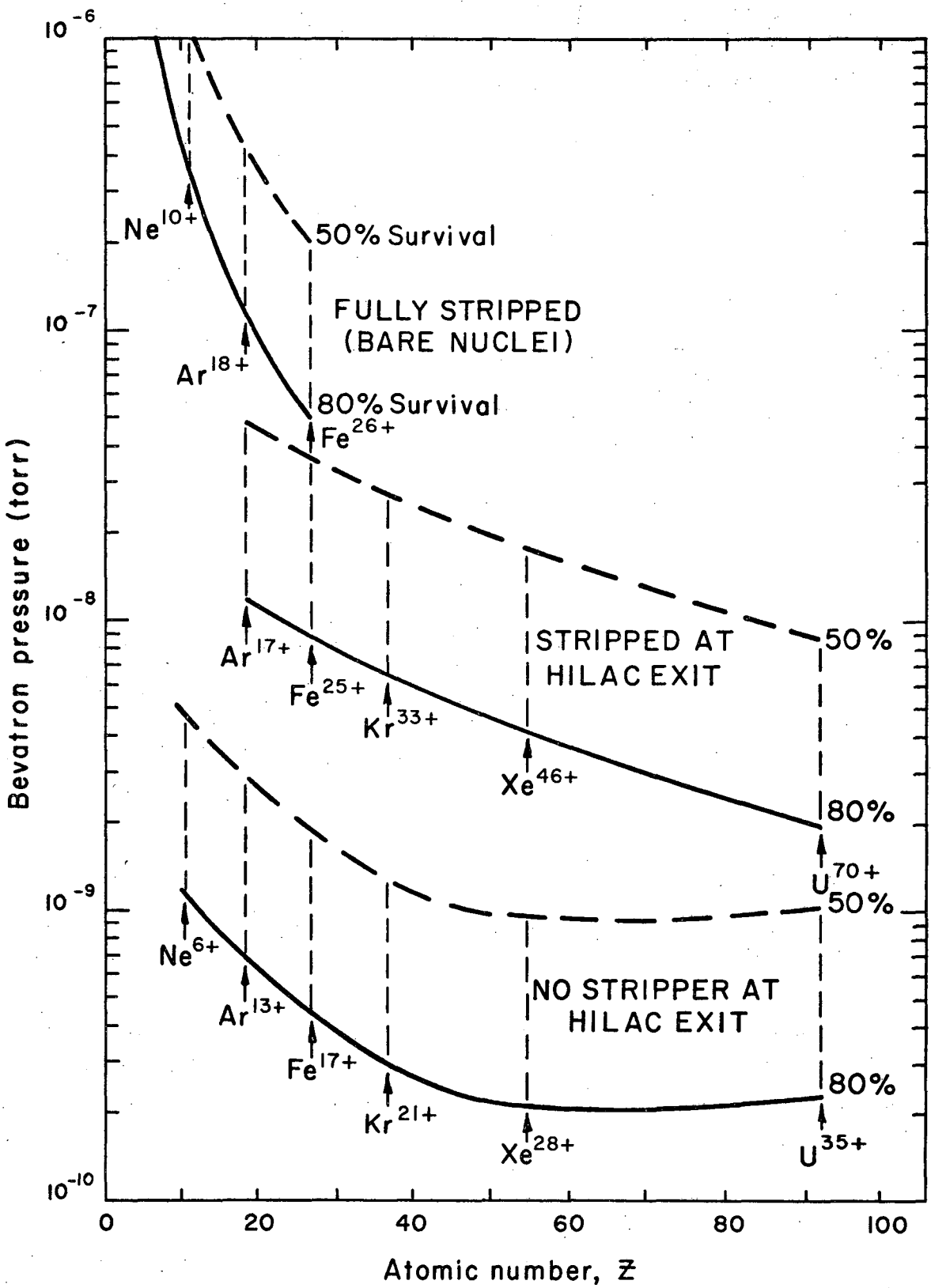

Fig. E-1. Pressure required for survival of heavy ions during acceleration to Bevatron full field.

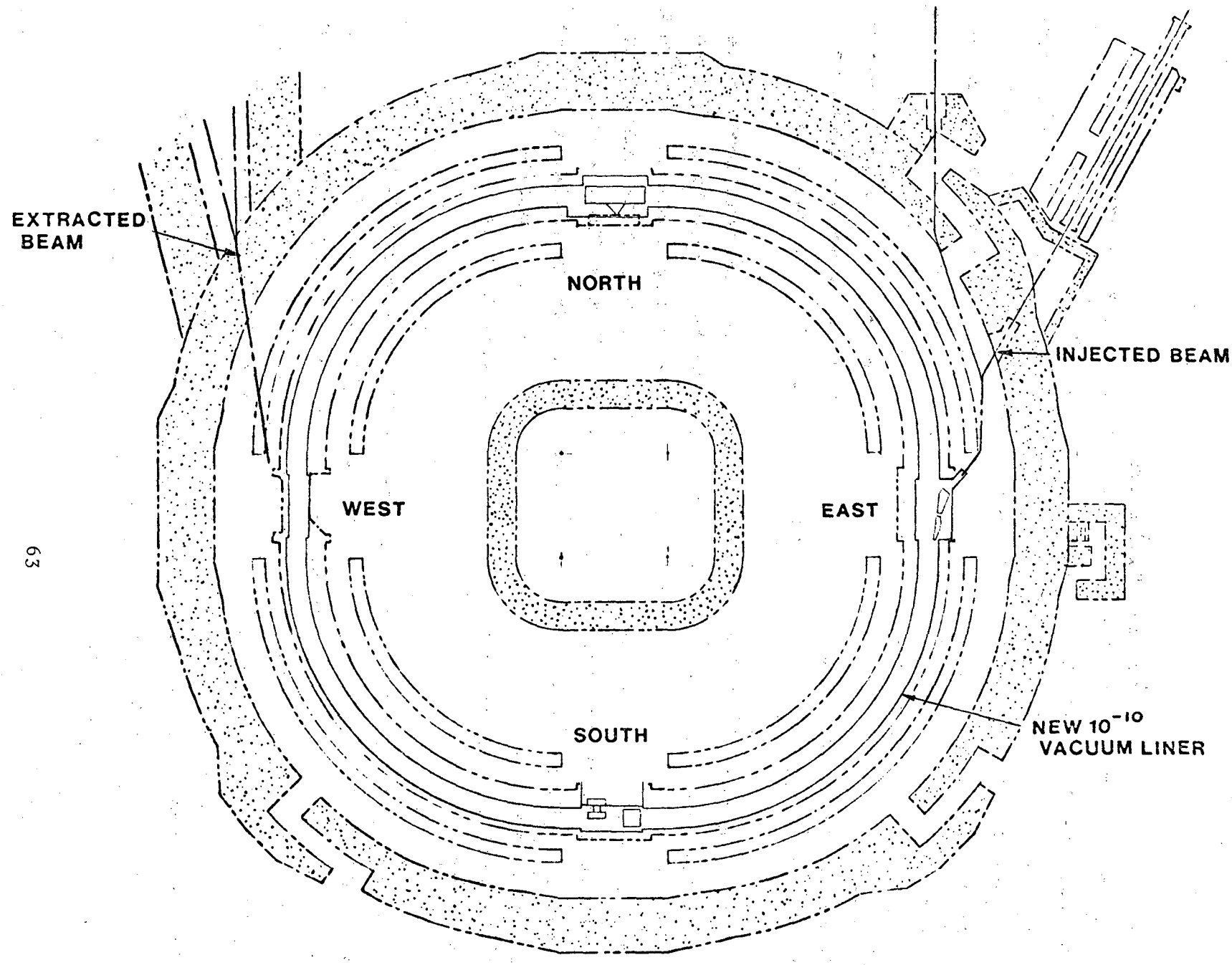

Fig. E-2. New Bevatron vacuum chamber (in red) within existing main ring.

except for small amounts of low outgassing polyimide (Kapton) sheet used for electrical isolation of the flanged joints at the ends of the quadrants.

E 2.2 Minimizing Outgassing Rates:

All metal exposed to the UHV system will be cleaned carefully. Several UHV investigators[1-5] indicate that there are a variety of cleaning procedures which achieve specific outgassing rates for stainless steel in the mid to low 10^{-11} torr-liter/sec-cm^2 range after 48 hours of pumping. These techniques include: a) Diversey cleaning, b) electro-polishing, c) vapor blasting with glass balls, d) vapor degreasing, e) plasma torch cleaning and f) vacuum baking. At these outgassing rates, diffusion of hydrogen from the bulk of the metal wall could become significant, but instead will be reduced to negligible values (for our purpose) by baking the metal in vacuum (e.g. 500°C for eight hours).

The size and configuration of the new vacuum tank components make chemical cleaning virtually impossible. Instead the curve tank will be vapor-degreased and then vacuum-baked to remove hydrogen and to provide a UHV clean surface. Material for the tangent tanks and other components will be baked to remove hydrogen, then fabricated, and finally vapor blasted with glass beads and/or vapor degreased. It is anticipated that these procedures will yield specific outgassing rates of one or a few 10^{-11}torr-liters/sec-cm^2 after 48 hours of pumping at room temperature.

As explained later, the curve tank will be refrigerated. Equations from Elsey's paper indicate, for typical residual gas constituents, that the outgassing rate can be reduced by a factor of ten for each 20°C that the surface is cooled below room temperature. Thus, the specific outgassing rate of the curve tank should be very much below 10^{-11} torr-liter/sec-cm^2 at 48 hours. Refrigeration is not planned for the tangent tanks, so the specific outgassing rates given earlier should apply there.

Not only does the vacuum tank need to be new, but all components located within the vacuum tank must be new and UHV compatible. This includes injection magnets, extraction magnets, beam instrumentation and RF accelerating electrodes. An exception is the electrostatic inflector, which can be modified slightly and cleaned to be UHV campatible.

E 2.3 Vacuum Pumping:

To achieve pressures of 10^{-10} torr and less requires greatly increased pumping speed in addition to low outgassing rates. Extensive cryopumping was selected as the major means of vacuum pumping. In each curve tank, the pumping speed of the 12°K surface for N_2 is ∿80,000 liter/sec and the corresponding pumping speed of the 77° K surface for H_2O is ∿400,000 liter/sec. Each curve tank has an exposed surface area of 4.6×10^6 cm^2. Since specific outgassing rates are anticipated to be well below 10^{-11} torr liter/sec cm^2 at 48 hours for the refrigerated curve tank, the gas load is $< 5 \times 10^{-5}$ torr-liter/sec and pressures should be well below the mid 10^{-10} torr range at 48 hours.

The ratio of pumping speed to exposed outgassing surface area for the tangent tanks, is approximately triple that for the curve tank, which leads to an expected pressure in the tangent tanks, in the low 10^{-10} torr range at 48 hours. The vacuum should continue to improve thereafter, approximately inversely with time.

E 2.4 Fabrication:

The above performance assumes no signigicant in-leakage. Careful fabrication and testing procedures will be followed to assure essentially zero leakage. Similar procedures will be followed to assure that UHV surfaces once cleaned are not subsequently contaminated.

E 3 QUADRANT MODIFICATIONS

Figures E-3, E-4 and E-5 illustrate the design concepts for the

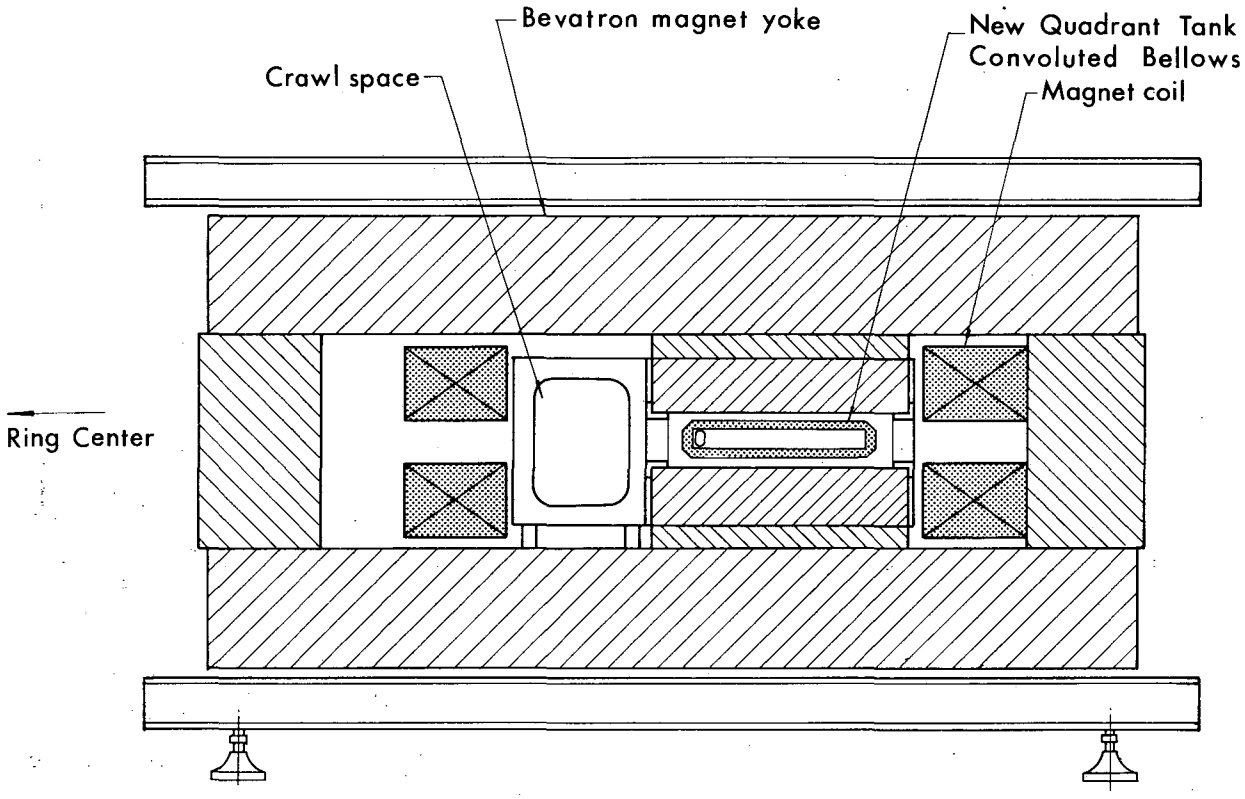

Fig. E-3. Typical quadrant cross section. New construction shown in red.

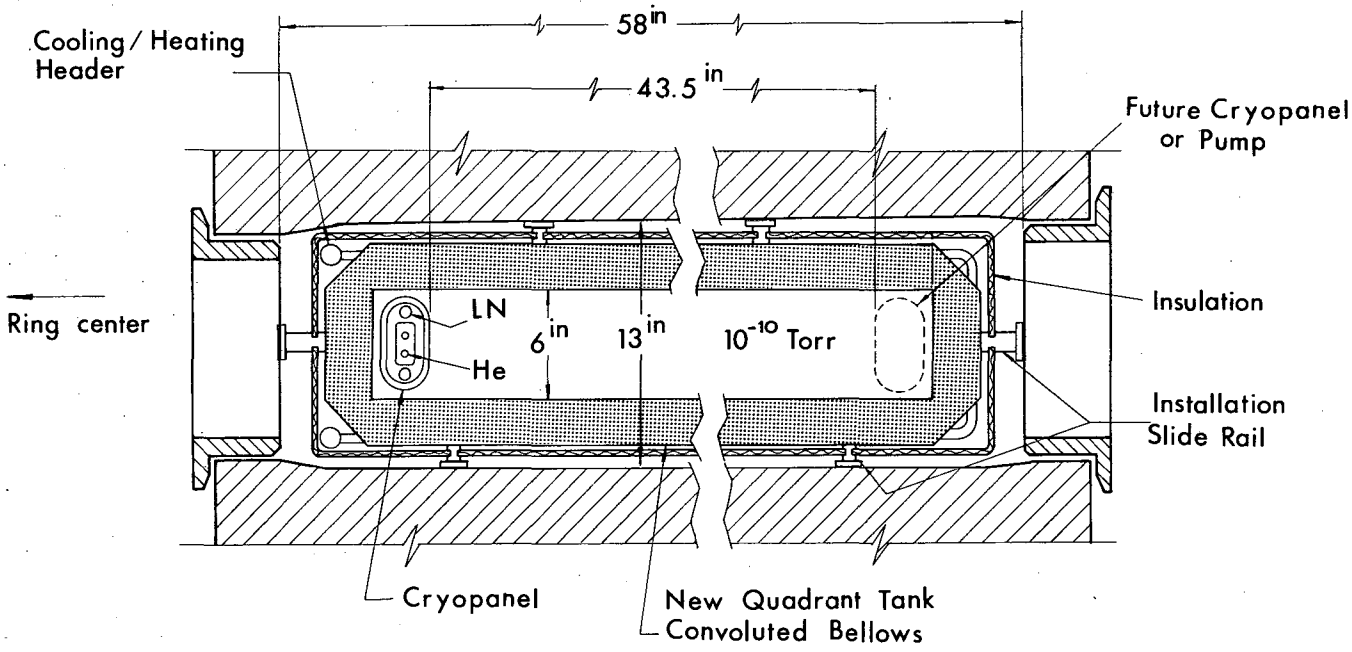

Fig. E-4. Enlarged quadrant cross section. New construction shown in red.

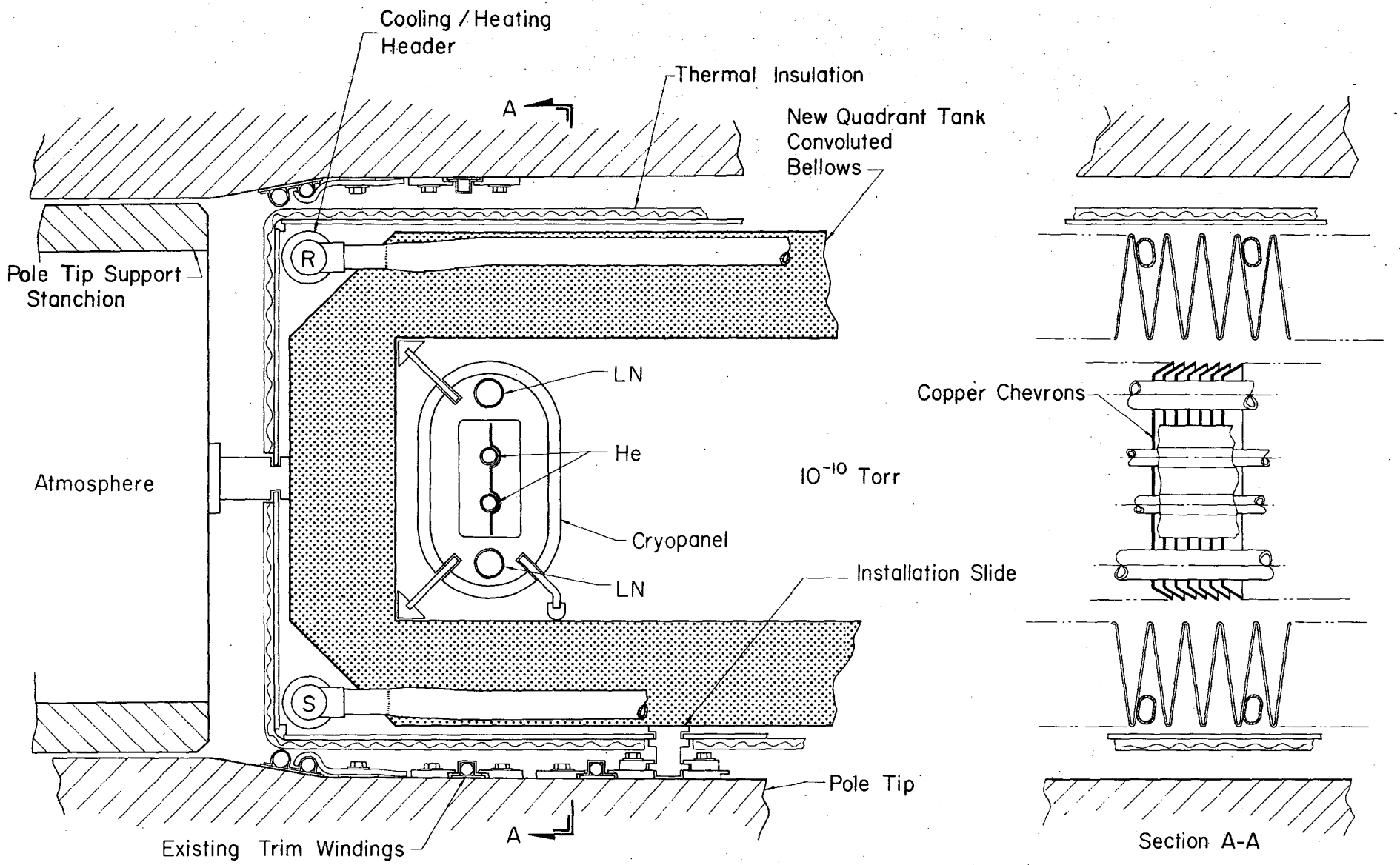

Fig. E-5. Details of quadrant (curve) tank and cryopanels.

quadrants.

E 3.1 Curve Tanks

A bellows-type construction has been selected as best satisfying overall technical requirements. Both the specific bellows configuration and the material used are of major importance in meeting design objectives. It provides the strength to withstand the one atmosphere pressure and yet has the flexibility to permit installation of an entire pre-tested 80 foot section. The inherent flexibility of a bellows minimizes the effects of thermal cycles and thermal shocks.

Because of the convolution geometry, the developed length of the bellows is approximately six times that of its apparent length. This extended length increases total electrical resistance and thereby reduces eddy currents and eddy current heating. This has the important result of mitigating the need for additional trim windings and minimizing the amount of mechanical refrigeration needed to cool the tanks.

Stainless steel #21-6-9 (also designated as Nitronic 40) has been chosen as the best material for the bellows. It has a low magnetic permeability of less than 1.01 from room temperature to liquid helium temperature. It is not adversely affected by cold working. It is a good material from the standpoint of welding, and its strength is superior to that of most stainless steels. It has a high electrical resistivity of approximately 75 MΩ-cm, which mitigates the need for additional trim windings. A material thickness of .050 inch is contemplated. A test section is being built to confirm the suitability of this thickness. Although exact data on outgassing rates of Nitronic 40 is not available, general knowledge indicates its behavior should be quite similar to stainless steel #304.

E 3.2 Joints and Flanges

Each complete curve tank ends up as a continuous 80-foot section. However, intermediate joints are planned to facilitate manufacture, handling and testing. For example, intermediate joints

might be located at 10-foot intervals. All such joints will be of a welded design permitting disassembly and re-welding, if required. The vacuum pre-bake to remove hydrogen and provide UHV-clean surfaces can be performed before or after the intermediate joints are made.

A flanged mechanical joint will be located at both ends of each curve tank permitting connection to the adjacent tangent tank extensions. Each flanged joint will be sealed by two soft aluminum wire "gaskets". A connection for "guard vacuum" will be provided between the two gaskets to permit leak testing and to reduce the rate of in-leakage through the gaskets, should it occur. Each flanged joint will incorporate an electrical insulation film (.005" polyimide) to isolate each curve tank from the adjacent tangent tanks.

E 3.3 Curve Tank Design at West Beam Exit

Beam exit requirements in the Southwest quadrant impose special design criteria on the last 15 feet of the curve tank. To accommodate the exit trajectory of the beam, the outer radius of the chamber will be increased by widening the bellows and substituting a flat (approximately 0.2 inch thick) plate for the vertical convolution section at the outer radius.

E 3.4 Curve Tank Cooling

The curve tank will be cooled to a temperature approaching -40°C. The major benefit of this is that it reduces outgassing rates of the curve tank by a factor of more than ten (theory indicates a factor of 1000 or more). Another major benefit is that the liquid nitrogen consumption of the curve tank cryopanels is reduced by more than a factor of two relative to a room temperature chamber. The cooling system must remove the heat due to induced eddy currents as well as the heat inflow from the surrounding Bevatron.

The mechanical refrigeration will consist of a 15 ton chiller which will be a reciprocating type device with R 502 refrigerant cooling an evaporator to chill a heat transfer fluid pumped through

headers into secondary tubes welded to bellows convolutions, as shown in Fig. E-6. The chiller will be a self-contained unit including motor, pump, compressor, expansion tank, evaporator, instruments, interlock and contacts necessary for normal operation. If in-situ bakeout is desired (see Future Options), the heat transfer fluid can be heated by means of an electrical in-line heat exchanger. Thermocouple temperature sensors will be placed at several locations on the curve tanks to monitor temperatures.

The region surrounding the curve tank will be sealed and initially purged with dry air. Then, dry nitrogen from LN boiloff will produce a dry atmosphere outside the curve tank to prevent frost buildup.

E 3.5 Curve Tank Insulation

Thermal insulation of the curve tank minimizes heat inflow from the Bevatron magnets to the cooled chamber. Multiple layers of mylar or fiberglass cloth will be applied for a 1/2 inch thickness before the vacuum chamber is installed. Rigid Nema G-10 fiberglass-reinforced plastic sheet protects the insulation during installation of the curve tank. If the in-situ bakeout option is exercised, the insulation will protect the magnet pole tips from overheating.

E 3.6 Trim Windings

Selection of high resistivity curve tank material and the 6:1 convolution ratio has minimized curve tank eddy currents to the point where the existing 19 pairs of trim windings are adequate without modification. Correction currents up to 35 amperes are required to buck out magnetic fields due to eddy currents. Wires will be wound around the Bevatron return yoke to induce a voltage that approximately bucks out the induced voltage in the trim windings. The power supplies for windings #2, #3, #4 and #5 must be made bipolar like the remainder of the power supplies. With these modifications the existing power supplies can furnish the required currents.

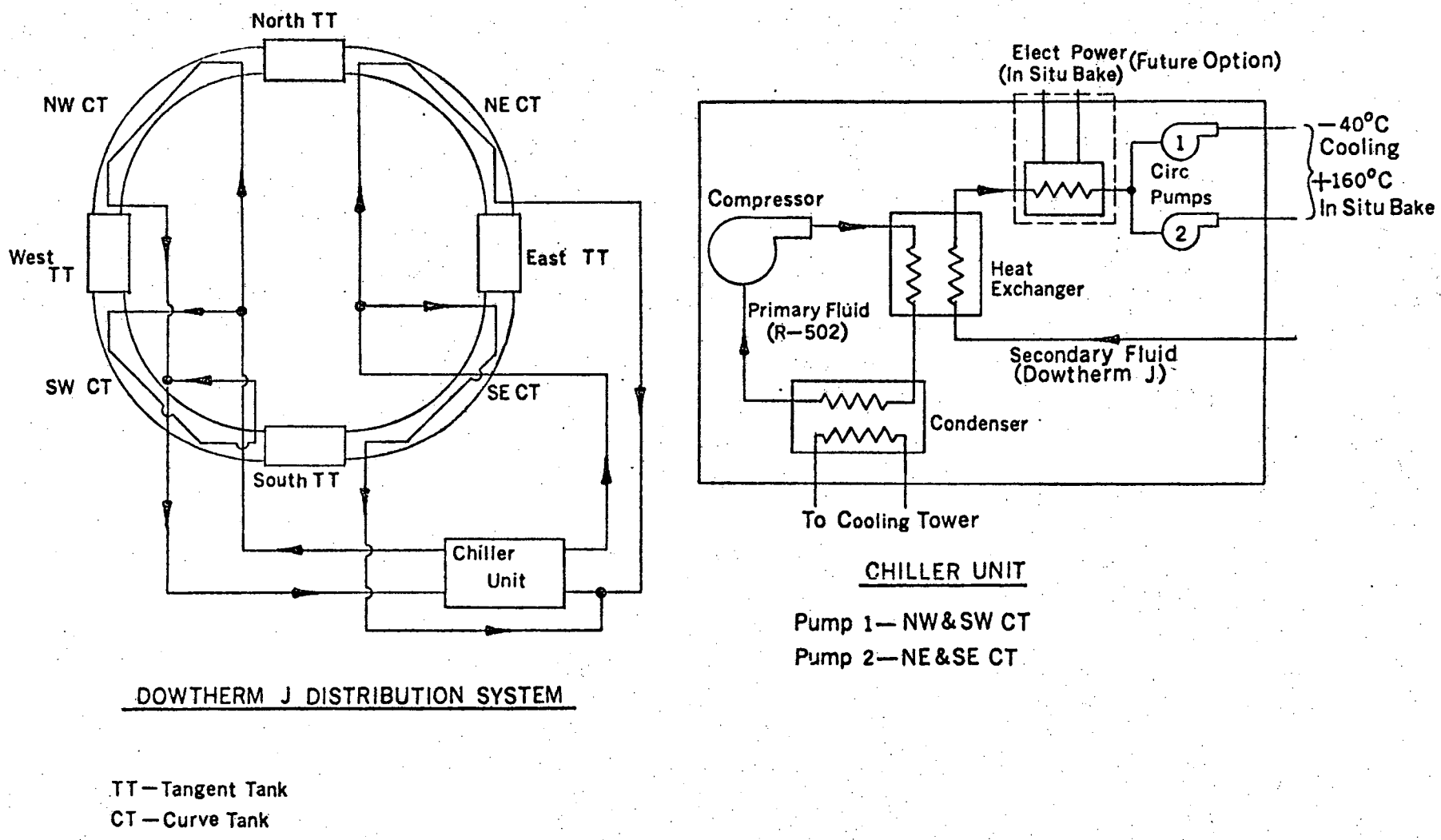

Fig. E-6. Quadrant (curve) tank cooling system.

E 4 TANGENT TANK MODIFICATIONS

E 4.1 Tangent Tanks

The existing tangent tanks are made of hot-rolled mild steel and are connected to corrugated stainless steel transition sections which are then connected to the quadrant (curve) tanks. The tangent tanks presently house equipment for injection, acceleration, extraction and diagnosis of the ion beam. Six 32-inch diffusion pumps are mounted underneath each tangent tank to provide 10^{-6} torr vacuum for the present machine.

For compatibility with 10^{-10} torr vacuum, new smaller tangent tanks will be built using stainless steel. The new tangent tanks will be installed within the framework of the existing tangent tanks. If, at a later date, a guard vacuum is desired surrounding the curve tank (see Future Options), the tangent tanks will be designed to have this capability.

Small extension tanks will be located at both ends of each new tangent tank. The new extension tanks also will be made of stainless steel plate. Flanges and gaskets will be similar to those at the ends of the curve tanks previously described, but will omit the insulating polyimide sheet.

Each tangent tank and extension tank will be custom designed to accommodate the specific equipment required therein. Such equipment and their respective tanks are shown in Figs. E-7 through E-10.

In the West tangent region, special modifications are required to accommodate the beam as it is extracted. The new UHV chamber is sized to provide a clear aperture of $\sim$ 2 inches vertically and horizontally from the extracted beam orbit. This necessitates cutting back a portion of the existing corrugated transition tank and a portion of the flanges between the existing transition and curve sections. It is also necessary to remove the vertical connecting piece of the tangential brace and

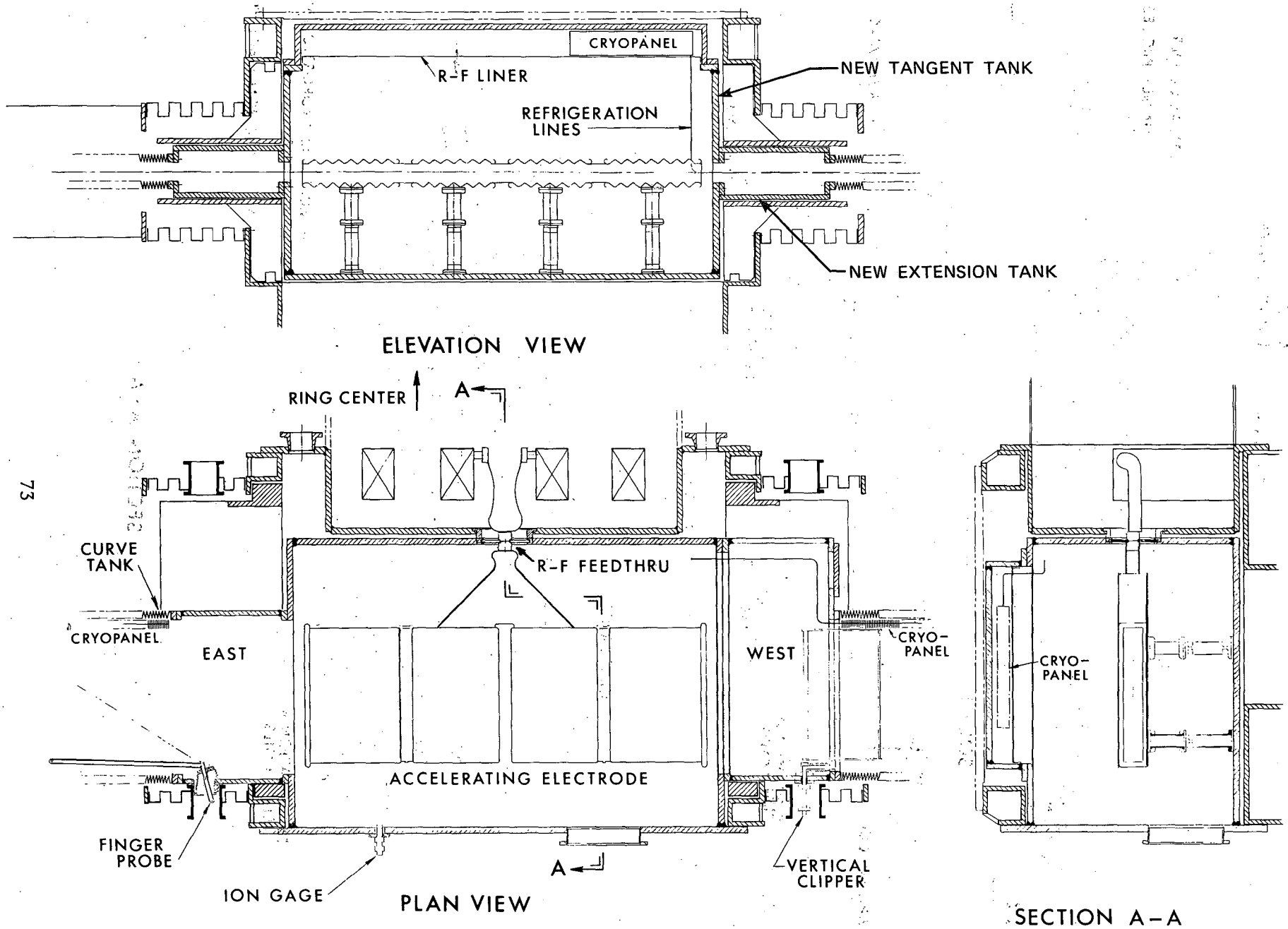

Fig. E-7. North tangent tank area. New construction shown in red.

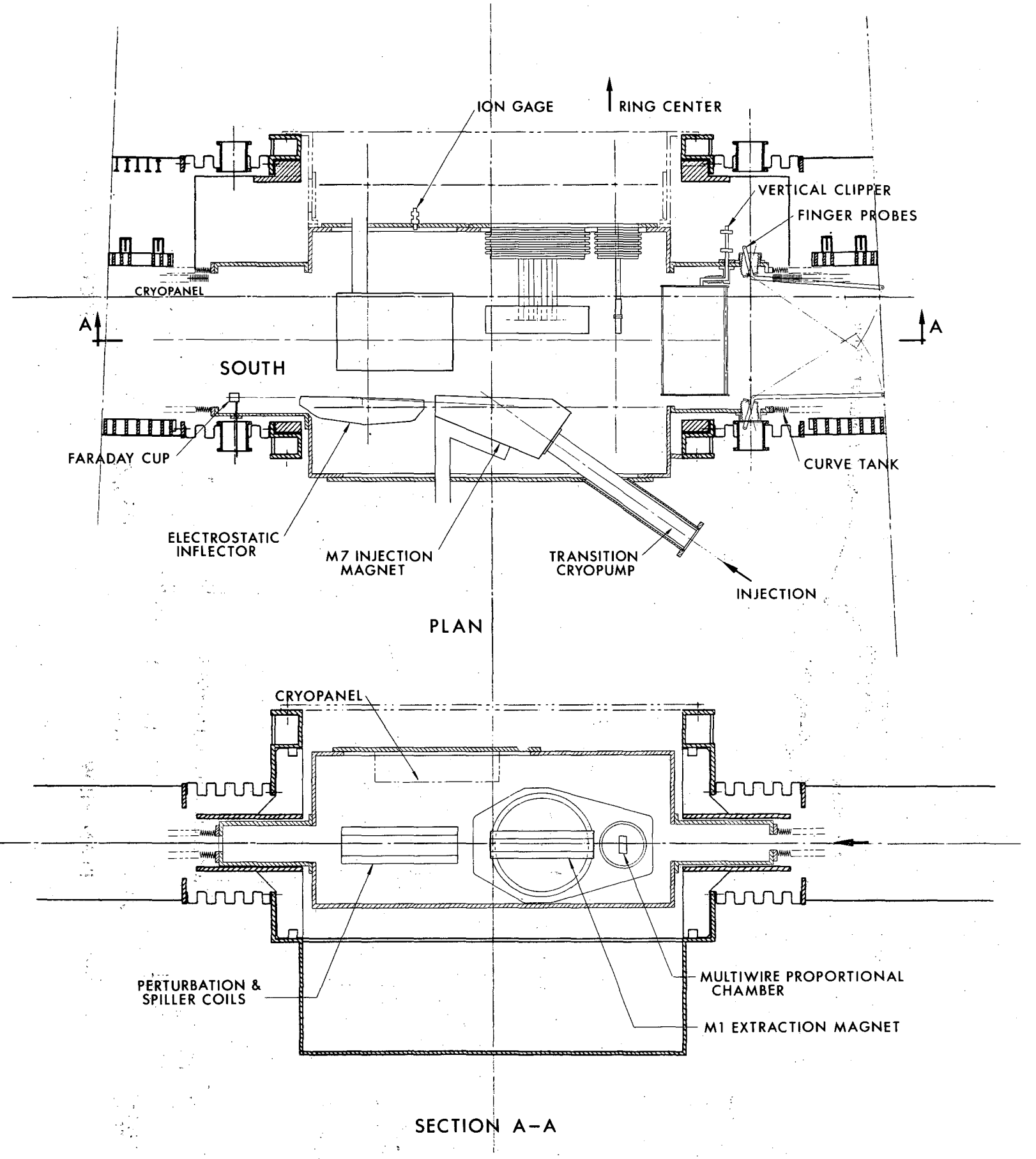

Fig. E-8. East tangent tank area. New construction shown in red.

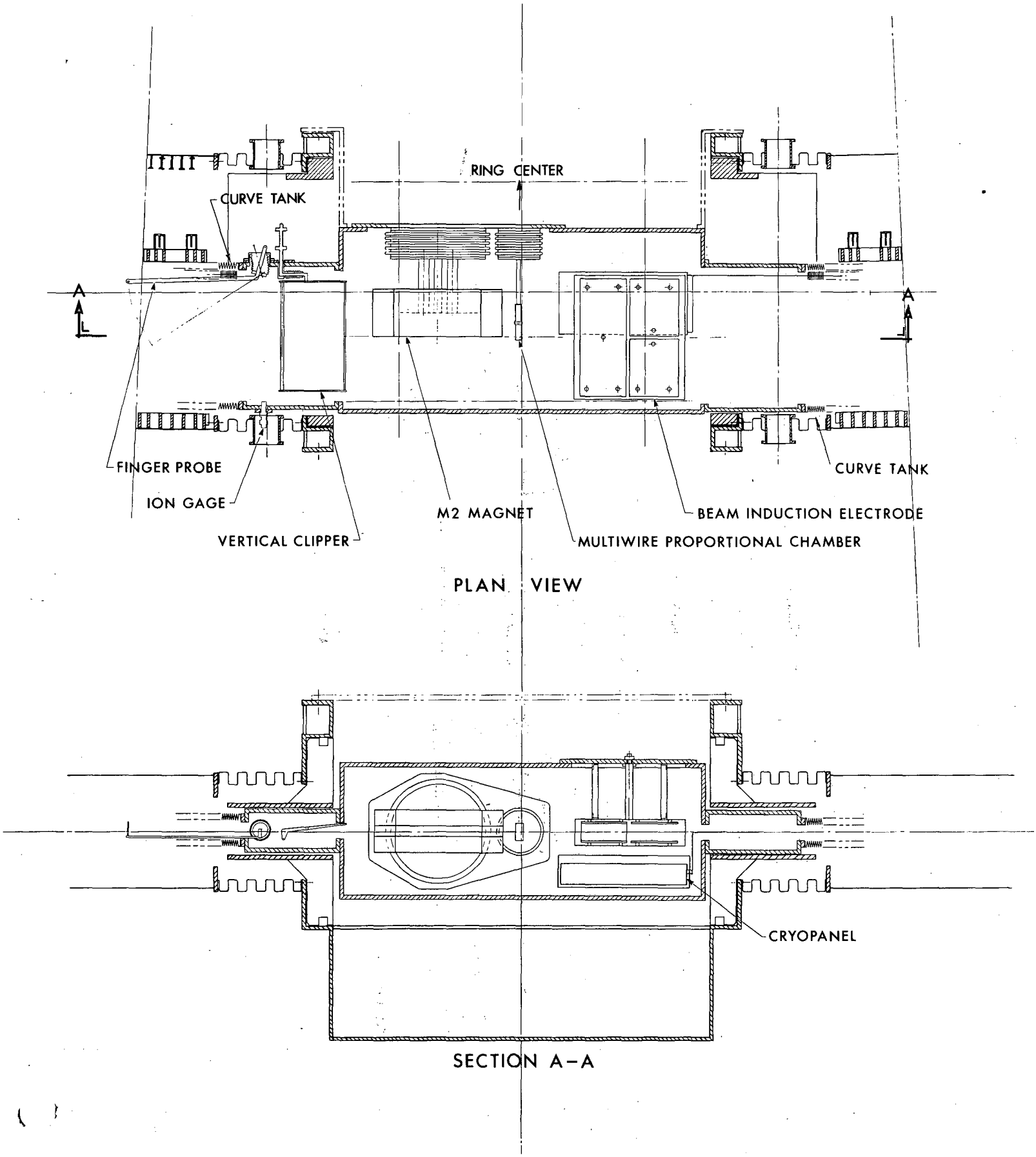

Fig. E-9. South tangent tank area. New construction shown in red.

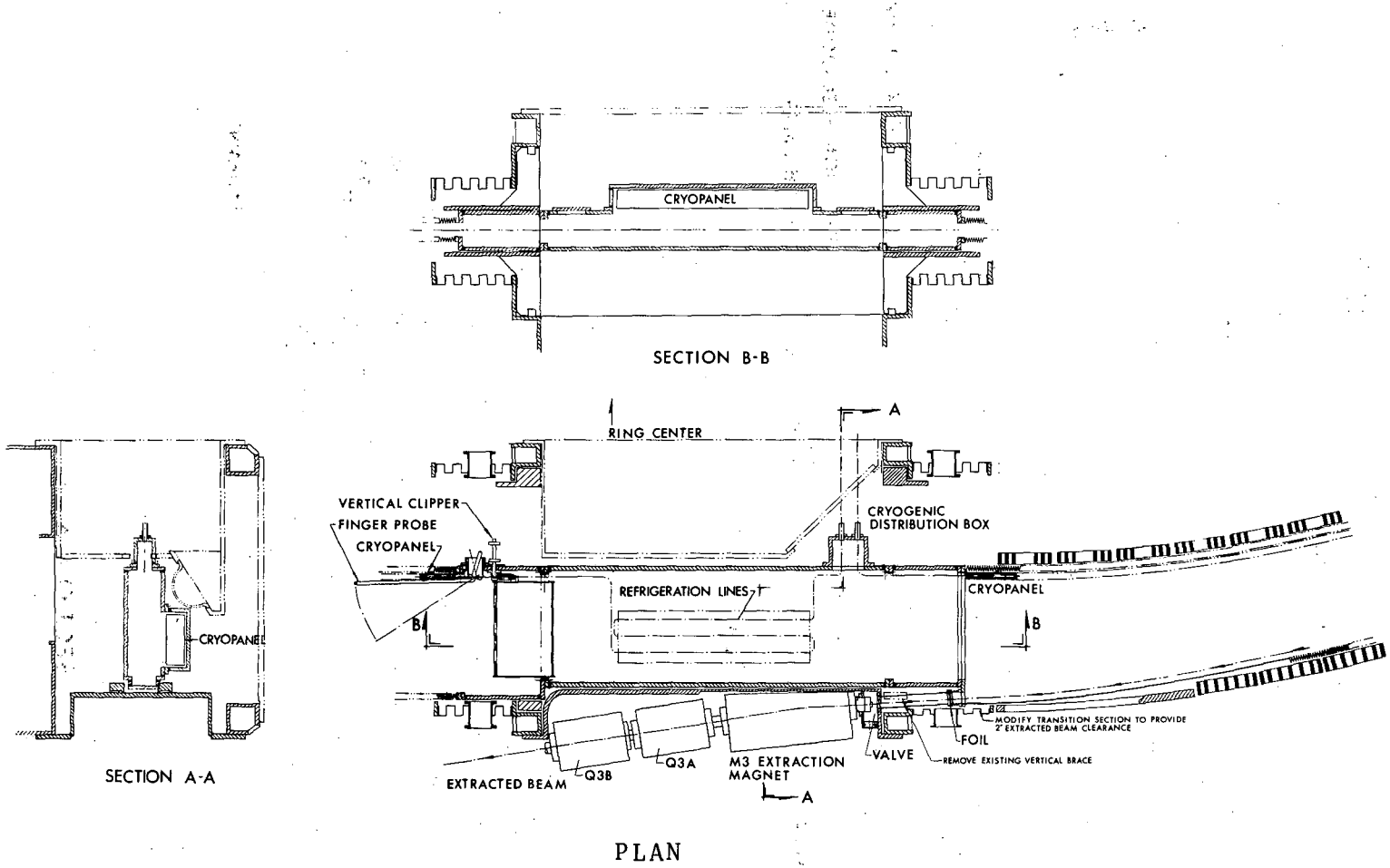

Fig. E-10. West tangent tank area. New construction shown in red.

provide a new means of restraining the remaining upper and lower halves of the brace.

E 4.2 Inflection

The magnetic and electrostatic components for the inflection system will be rebuilt to become compatible with the new ultra high vacuum requirements. Two injection elements will still be required in the east tangent tank, specifically: a dipole magnet to bend the beam by approximately 33° into the east tangent tank, and a thin-septum electrostatic inflector to deflect the beam the final 2° required for injection.

E 4.2.1 Electrostatic Inflector

The present length and field strength (less than 100 kV/in) of the electrostatic inflector need not be changed. The thin septum will be replaced with a new thin polished stainless steel electrode (0.010" thick). Minor insulator and assembly details will be improved to allow the entire unit to be compatible with ultra high vacuum.

E 4.2.2 Inflection Magnet

The dipole magnet will be entirely new with a strength of $B \cdot L_{eff}$ =567 Kg-inch. A compact layered sheet coil septum magnet will be used and follows closely the design of a similar septum magnet now in use for over four years at the superHILAC. The magnet is "canned" in a welded steel box that also serves as the yoke or flux return path, and the coil is flooded with circulating coolant flowing inside the box.

The magnet will be designed to accept beams of rigidity $B\rho$ = 984 Kg-inch (corresponding to a SuperHILAC beam without exit stripping) even though initial operation not exceed $B\rho$ = 575 Kg-inch (partially stripped at SuperHILAC exit). The magnet will be constructed with four nested coils and will form two stages: a 9 Kg exit region extending for 15 inches, and an 18 Kg. entrance region following for an additional 24.5". This combination makes efficient use of available space, shortens the magnet to a minimum overall length (approx. 45") and,

more importantly, permits the effective turning point to stay at its present location which means that the upstream elements do not have to be rebuilt or repositioned, and the beam optics solutions remain the same.

The preliminary design parameters are listed below:

General:	$B\rho$	25 kG-m = (984 kG-in)
	Θ	approx. 33°
	BL_{eff}	567 kG-in
	B_o	9 kG, 18 kG
		109.33 in
Steel:	Gap	2.5 in
	Aperture width	±0.5 in half width minimum
	Septum Width	1.20 in maximum at exit
Coils:	Current	320 amps
	Turns	70 turns each, 4 coils
	Conductor	0.032 in copper strip
	Insulation	0.003 in Nomex
	Coil Resistance	0.44 Ω
	Voltage	140.6 V
	Power	45 kW

All four coils will be run in series with a 320A, 141v power supply. The coils are flood-cooled by a separate Freon 113 circulating cooling system. A flow of approximately 40 gpm. with a pressure differential of 3-4 atmos. is required. A system with approx. 5 hp. pump/motor, a heat exchanger, 30 gal. storage tank, and an in-line flow filter should be adequate.

E 4.3 Extraction Magnets

The extraction magnets are funded as an Accelerator Improvement Project (AIP), but are described here in the interest of completeness. The extraction components will serve the same functions as

those presently in use, but each must be of completely new design for UHV compatibility. In the east tank, the quadrupole Q1 will be eliminated and the present large plunging dipole magnet M1 will be replaced with two units: a fixed position laminated steel dipole containing the "gradient" and "spiller" coils, and a new plunging thin septum extraction magnet. In the south tank, the quadrupole Q2 will also be eliminated, and the plunging dipole M2 will be replaced with one that is UHV compatible. Both plunging systems are also being redesigned and will no longer plunge the magnets through a long linear stroke, but instead will activate the upper and lower halves together in a clamshell manner to close the magnet around the extracted beam position. Both new plunged magnets, then, consist of an upper and lower half each independently supported from an arm of the clamshell.

All three new magnets will be laminated. Each magnet will be enclosed inside a box with a clean stainless steel skin exposed to the UHV area. The coils that must be exposed to the vacuum (only the 4-turn spiller and thin M1 septum) will be fabricated using oven-brazed ceramic insulators. These coils will also be constructed such that all water connections and joints are outside the ultra high vacuum. All conductor leads penetrate the vacuum wall through clean ceramic insulated feed-thrus. The stainless skins will be constructed to allow heating or cooling tubes to be attached for modest bake-out or cool-down operations.

E 4.3.1 <u>Gradient/Spiller</u>

The fixed position M1 gradient/spiller magnet will have a 6" clear gap so that it can remain fixed in position and clear the circulating beam. The "gradient" and "spiller" coils will be pulsed in 100 m sec.

The preliminary design parameters for this unit are listed below. The coil voltage and power value are for D.C. operation.

Magnet:	Gap	9.25" to steel; 6" clear inside coils
	Iron Length:	33" (same as present M1)
	Effective Length:	approx. 39"
Gradient Coils: (inside stainless steel can)		
	B_{max} required:	1600 gauss
	Conductor Size:	.467" x .467" copper with a .275" dia. hole
	Number Turns:	9 each coil; 18 total
	Current risetime	∿ 100 ms
	Current:	1,660 amps.
	Resistance:	9.6×10^3 ohms
	Voltage:	15.9 Volts (D.C.)
	Power:	26.4 KW (D.C.)
	Water:	2.4 GPM
	Pressure differential:	40 psi
	Temp. Rise:	42° C
Spiller Coil: (outside stainless steel can)		
	Conductor Size:	.467" x .467" copper
	Number Turns:	4
	Current risetime:	∿ 100 ms
	Current:	955 amps
	Resist.:	2.3×10^{-3} ohms
	Voltage:	2.2 Volts (D.C.)
	Power:	2.1 KW (D.C.)
	Water:	2 GPM
	Temp. Rise:	10°C

E 4.3.2 M1 Septum

The M1 Septum section will be built in two halves, an upper and lower, to be compatible with the new plunging system. The thin septum coil is located outside the stainless box enclosing the

laminations and is supported to withstand handling forces, plunging forces, and magnetic forces. The septum conductors are fabricated from tubing sections of OFHC copper which are squashed into a narrow rectangular cross section. The return conductors are fabricated from modified 0.340" square hollow copper conductor. Each coil has 8 turns, and each turn is made up of 2 separate pieces. To eliminate any water joints inside the UHV area, each end of each piece must penetrate the vacuum wall before the joint is made. This results in 32 feed-throughs per coil, or 64 for the total magnet. Parameters for the magnet are listed below:

Magnet:	Gap:	5.4" clear
	Iron Length:	33"
	Effective Length:	38"
	Septum Thickness:	.11" min.
Coils:	Field Level:	3740 Gauss
	Number Turns:	16
	Current risetime	$\sim$100ms
	Current:	2461 Amps
	Resistance:	.0716 Ω
	Voltage (D.C.):	176 volts
	Power (D.C.):	434 kW peak

E 4.3.3 M2-Septum

The M2 Septum magnet in the south tank will be rebuilt in 2 halves and canned in stainless steel boxes similar to the new M1 design. The allowable septum thickness is considerably thicker (1.0" vs. 0.128"), however, so in this case the coil assembly can also be included inside the box. This makes the coil fabrication and support problem much easier and presents a cleaner surface to the vacuum. The coil will be fabricated to permit the entire magnet skin and contents to be baked at

150° C. Parameters for design are listed below:

Magnet:	Gap:	4.3" clear
	Iron Length:	36"
	Effective Length:	39.4"
	Septum Thickness:	2.8"
Coils:	Field Level:	10.0 kG.
	Conductor Size:	0.467" x 0.467" copper, .275 dia. hole
	Current risetime:	∿ 100 ms
	Current:	2,833 Amps.
	Number Turns:	32
	Resistance:	.0195 Ω
	Voltage:	55V
	Power:	156 kW

E 4.3.4 Plunging Mechanism

In the present extraction system, each plunged magnet is mounted and guided by support rails within the tangent tank and is driven through a sliding seal by a large hydraulic ram located outside of the tangent tank.

For the 10^{-10} torr vacuum, the whole existing system inside and outside the tangent tanks will be removed. Upper and lower magnet halves will swing about a pivot located outside the new tangent tanks. They will come together in ∿400 milliseconds for extraction, and then will separate to a 6 inch minimum clearance before the next pulse. This will be accomplished by means of a pivot arm supporting each magnet half and passing through a bellows mounted on a vacuum cover plate. The pivot arms will be driven by an hydraulic cylinder and cam arrangement. To provide 6 inch radial positioning, both assemblies will be mounted within a large common bellows. For servicing, the whole magnet and plunging mechanism can be removed as a unit.

E 4.4 Radiofrequency Accelerating System

The rf accelerating electrode together with its enclosure, supports and ceramic high-voltage feedthrough must be completely replace with ones that are UHV compatible (ref. figure E-7).

The new accelerating electrode and the vacuum enclosure will retain the existing electrode length and capacitance. Thus, the existing rf amplifier can be used. Capacitance measurements and an rf mode study will be made on a scale model electrode and enclosure to assure that the new design is suitable.

The accelerating electrode will be fabricated of stainless steel sheet formed into corrugations for stiffness. The electrode will be supported on ceramic standoff insulators. The North tangent tank, housing the rf accelerating electrode, will be fabricated primarily out of stainless steel plate.

The ceramic high-voltage feedthrough will be modified to replace the elastomer gaskets with soft aluminum wire gaskets, complete with "guard vacuum" connection.

E 5 VACUUM PUMPING

Most of the vacuum pumping will be provided by cryopumps continuously distributed inside the ultra-high vacuum envelope of the Bevatron perimeter. Helium-cooled lines at $\sim 12^{o}K$ will provide pumping speed of approximately 400,000 liters/sec for air, while the liquid nitrogen shrouds (surrounding the helium lines) will provide pumping speed of approximately 2,000,000 liters/sec for condensibles.

All materials of construction for the liner will be prebaked to reduce the hydrogen outgassing load down to $\sim 10^{-14}$ torr-liter/sec cm^2. With pumping for hydrogen located only at the tangent tanks, the pressure "bump" at the middle of the arcs is less than 10^{-11} torr, a negligible value.

Other pumping methods are also provided at the tangent tanks to remove gasses not readily pumped by the cryopanels and to provide for rough evacuation of the chamber from atmospheric pressure.

E 5.1 Curve Cryopanels

The curve tank cryopanel geometry is designed to be sufficiently flexible so that the entire cryopanel assembly for a quadrant can be installed or removed in one piece, thereby limiting cryogenic field joints to accessible areas and eliminating the need for numerous bellows. The cryopanel is electrically isolated from the curve tank to minimize eddy currents.

The curve tank cryopanel arrangement is shown in Fig E-5. Stainless steel chevrons are attached to LN cooled tubes. These are painted black to prevent the transmission by reflection of room temperature radiation to the helium cooled surfaces. Fins extend the surface area of the helium cooled tubes. Refrigeration loads due to eddy currents are limited since the chevrons are attached in such a manner that primarily only the cooling tubes intercept the magnet field.

E 5.2 Tangent Tank Cryopanels

The tangent tank cryopanels shown on Fig E-11 will be of modified Santeler-type geometry. The liquid nitrogen cooled shields will be fabricated from extruded aluminum shapes. The helium cooled surfaces will be copper sheets brazed to stainless steel tubes. A wire system will support the helium cooled surfaces from the LN cooled surfaces. The wire supports are electrically insulated from the LN surfaces by means of alumina bushings. Each cryopanel is attached to a support cover plate which closes the vacuum box with a metal seal. This modular approach allows the removal of a cryopanel unit for repairs, if necessary, and allows for the installation of additional cryopanels, if required in the future.

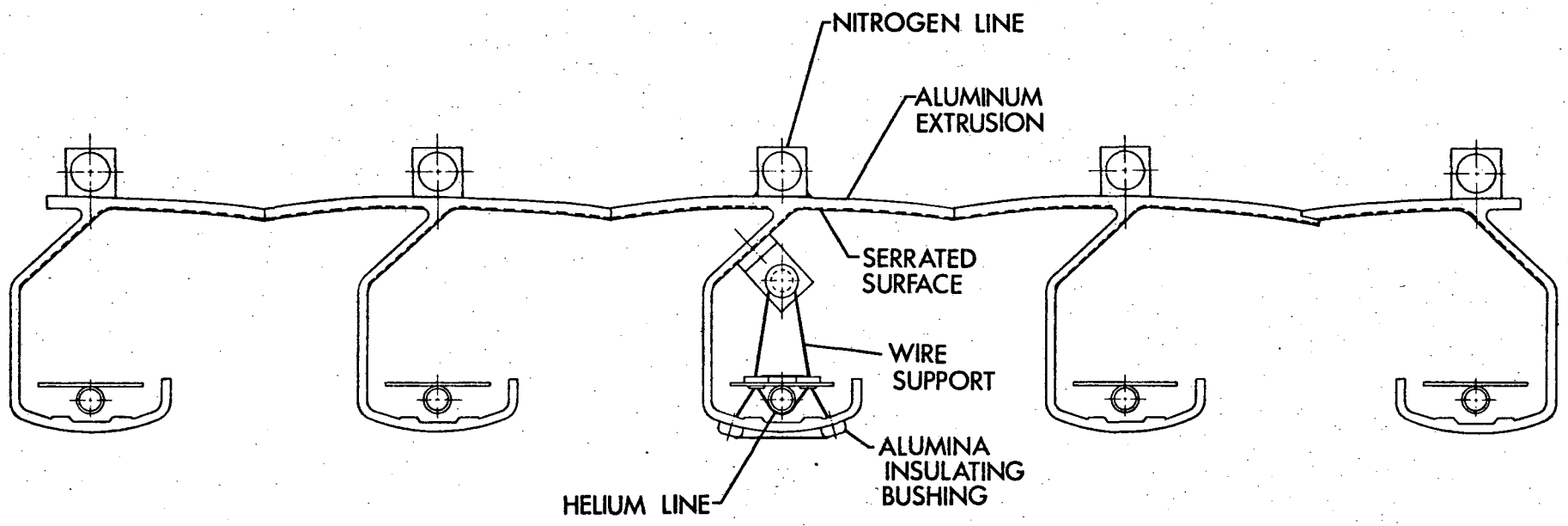

Fig. E-11. Tangent tank cryopanel.

E 5.3 Injection Cryotrap

The injection cryotrap will be a long helium-cooled, liquid-nitrogen-shielded tube which connects the ultra-high vacuum region with the beam injection line. Solid angle considerations predict that the gas loads due to this "leak" will not unduly raise the pressure in the east tangent tank.

Refrigeration circuits will be in series with the quadrant and tangent tank cryopumps. Additional pumping will be provided at the injection line end of the cryotrap to reduce the gas throughput for the cryotrap.

E 5.4 Auxiliary Pumping

Turbomolecular pumps, with diffusion pumps on the fore-vac side, will be installed in the east and west tangent tanks. These are required to remove the small partial pressure of neon or helium which could be introduced due to an air leak or improper purging of the volume during initial pumpdown. The turbomolecular system will also be used to remove the gases evolved when the cryopumps are warmed up for regeneration.

In addition, titanium sublimators will be installed in all four tangent tanks to supply hydrogen pumping speed.

E 5.5 Roughing

Roughing to 1 torr will be accomplished by well-trapped mechanical pumps. Further roughing to a few times 10^{-4} torr will be provided by LN cooled sorption pumps. All plumbing and valves for both the mechanical and sorption systems will be either removable or bakeable to prevent contamination during subsequent roughing cycles.

E 6 EXTERNAL CRYOGENICS

E 6.1 Helium Refrigeration System

Helium refrigeration will be supplied from two existing CTI 1400 refrigerators, each supplying two circuits from a single distribution box as shown in Figure E-12. Each refrigerator is capable of cooling 200 watts at 20 K when two compressors are operating and LN precooling is supplied. The refrigerators will operate in the 12 to 15 K range with the low heat transfer rates (60 to 70 watts) anticipated in the present design.

E 6.2 Distribution Boxes

Two distribution boxes will be fabricated, each supplying two circuits. The boxes will contain all valving to control refrigerant flow and thermometry to monitor temperatures.

E 6.3 Helium Transfer Line

The helium cold boxes are located outside the Bevatron shielding for easy access during operation. Modest lengths of vacuum superinsulated transfer lines will be fabricated to supply helium to the distribution boxes.

E 6.4 Liquid Nitrogen System

Liquid nitrogen will be circulated by pumps returning the gas-rich fluid back to the storage dewars. Valves in the distribution boxes will be throttled to balance the flows. Liquid nitrogen consumption is estimated to be $\sim$200 liter/hour when the curve tank is cooled to -40°C.

E 7 BEVATRON INSTRUMENTATION AND MONITORING

The Bevatron main ring requires instrumentation and monitoring for control and tuning of the ion beams. Modifications to the system have been implemented during the course of Bevalac operation to accommodate monitoring of the lower intensity heavy ion beams. The insertion of an

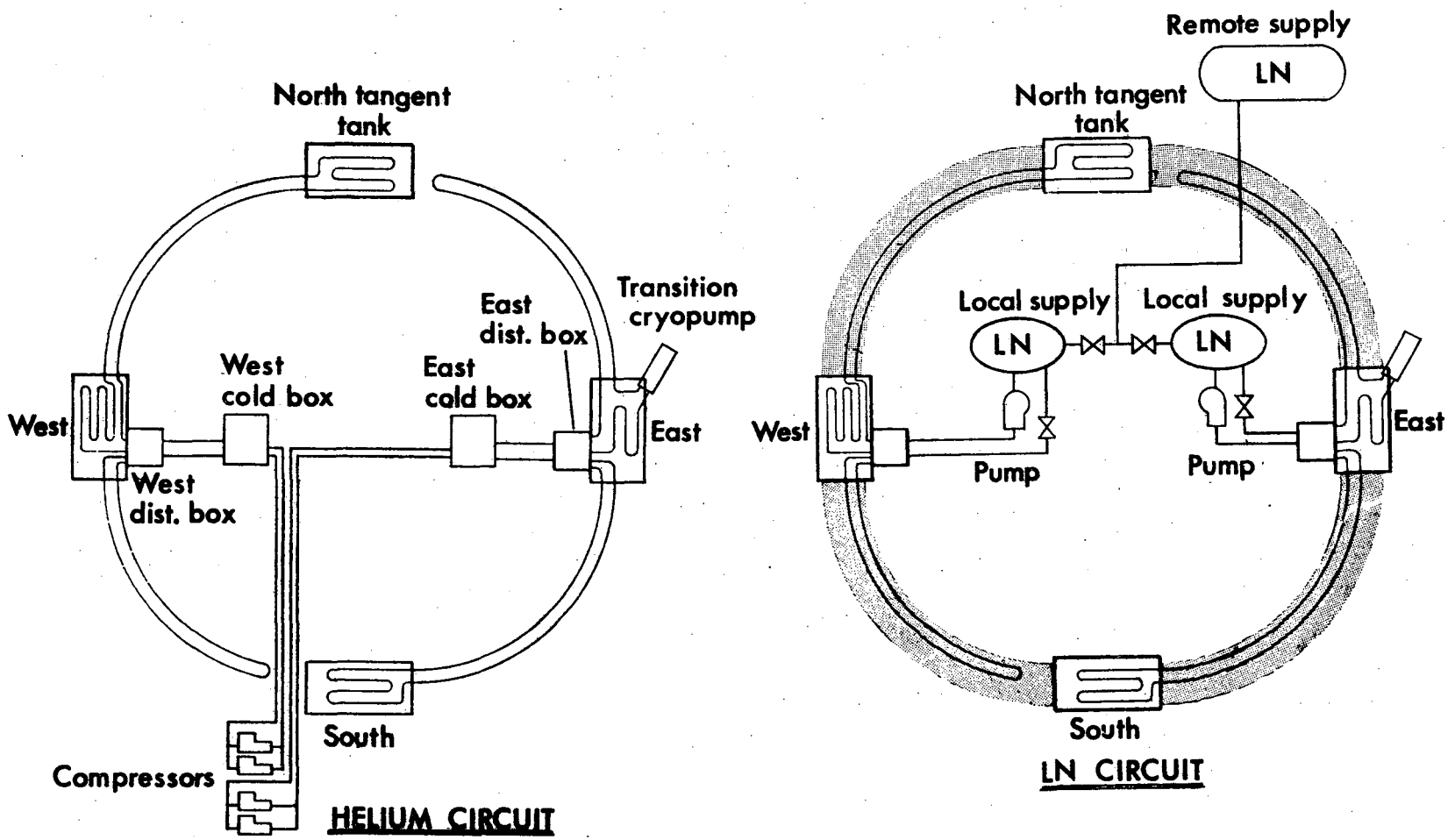

Fig. E-12. Refrigeration system.

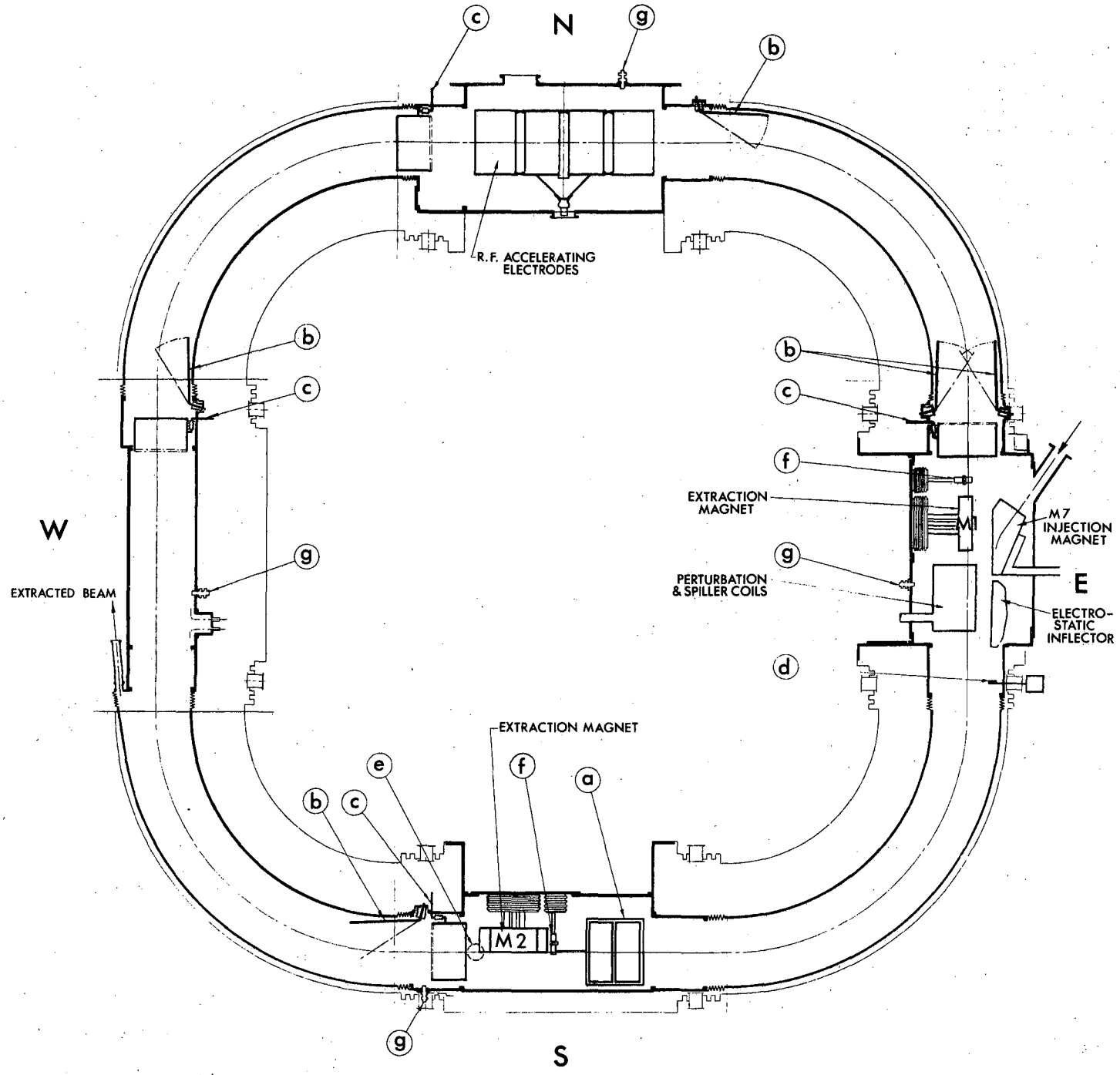

Fig. E-13. Bevatron instrumentation.

a. Beam induction electrode.

b. Finger probes.

c. Vertical clippers.

d. Faraday cup.

e. Ports.

f. Multi-wire chambers

g. Ion gauges.

ultra high vacuum chamber and the resulting smaller aperture require further modifications of the existing beam diagnostics equipment and the elimination of others which cannot be accommodated either due to spatial limitations or unacceptable outgassing into the ultra high vacuum. The following minimum instrumentation, diagrammed on Figure E-13, will be required inside the 10^{-10} torr vacuum of the Bevatron.

E 7.1 Induction Electrode System

A modified beam induction electrode system will provide beam intensity, radial position and beam bunch phase information for the radiofrequency acceleration system. The electrodes will consist of four stainless steel plates. The electrode ground enclosure will be part of the vacuum tank. Radial information will be obtained from the individual halves of the electrode, while total beam and beam phase information will be generated by summing the two radial signals. This sytem will be located in the south tangent tank.

A new set of pre-amplifiers and a super-heterodyne system for monitoring the circulating heavy ion beams will be built to interface with the new beam induction electrode system.

E 7.2 Radial Probes

Two pairs of radially adjustable finger probes (one pair in the east straight section and one pair in the north) provide beam diagnostics as well as radial beam position and width information necessary in tuning the resonant extraction system. The finger probes are 1/2 x 1 inch metal bars approximately 8 inches long, with independent radial positioning. The drive mechanism will be located outside of the UHV chamber. Beam survival as a function of position will be determined by flipping the probes into the aperture. By electrically isolating the bar and bringing a signal lead out, these probes can also function as inner or outer radius cups for low energy particles. A single finger probe will be installed in each of the other two straight sections. New preamplifiers and associated electronics will also be built for the finger probes.

E 7.3 Vertical Clippers

A single horizontal bar target will provide information for general vertical beam diagnostics. The bar, approximately 3/8 inch in diameter, will cover the full radial aperture of the vacuum tank and will be moved vertically through the beam. There will be one such mechanism in each straight section, with the drive mechanism outside the vacuum system.

E 7.4 East Outside South Cup (EOS Cup)

A fast plunging Faraday cup at the exit of the electrostatic inflector will provide information for tuning the injection line and preventing unwanted beam from being injected into the Bevatron.

E 7.5 Tangent Tank Ports

A contingency port will be provided in the East, South and West tangent tanks to preserve future options in installing other beam monitoring devices.

E 7.6 External Beam Extraction Monitoring

New movable multi-wire chambers, similar to those now used with the plunged beam extraction system, will be employed with suitable modification to operate without lubrication. Windows on these chambers will be made thinner to allow for detection of lower energy particles. These will be located in the East and South tangent tanks.

E 7.7 Vacuum Monitoring

UHV monitoring will be accomplished with four ion gauges, one at each straight section. The auxiliary and roughing systems will have ion and thermocouple gauges as appropriate.

E 8 Installation

Each of the four curve tanks and four tangent tanks, complete with all of their internal components, will be evacuated and tested individually to make sure that every tank assembly is capable of achieving its pressure goal. The Bevatron will be shut down and

installation will commence only after all eight tanks are performing properly.

Installation will begin with removal of existing concrete shielding blocks and tangent tank cover plates in the four tangent regions. Next, the four curve tanks will be installed into their respective quadrants. The flexibility of the bellows will permit the tank to undergo an S-turn as it is fed from the roof of the Bevatron shielding through the tangent tank and into the quadrant section. The bellows will slide into position on six pre-installed plastic (Kel-F) guide rails. These guide rails also serve to accurately position the curve tanks.

After the four curve tanks and their cryopanels are installed, the four new tangent tanks will be put in place and connected to form the entire vacuum chamber ring. With the completion of leak checking, the ring will be pumped down to confirm the desired performance.

Care will be taken throughout installation to assure that the interior UHV surfaces are not contaminated.

E 9 QUALITY ASSURANCE

Because of the demanding nature of many aspects of the project, an effective quality assurance program is essential. The level of quality assurance for each part of the project will be appropriate to the degree of difficulty in meeting the required specifications.

Quality control will be particularly important for the ultra high vacuum sections of the Bevatron. Extreme care must be given to all details, from initial design through procurement, fabrication, inspection, testing and final installation. A formalized, highly-visible and meaningful quality assurance program will be instituted. Detailed procedures will be written to cover handling, cleaning, heat treatment, storing and final assembly. Criteria for the UHV designs will be distributed to all members of the engineering and design group. These

criteria will define what materials and welding techniques can be used, as well as acceptable practices for cleaning, handling, treatment and testing. Design reviews will be conducted to assure UHV compatibility and acceptability of each part.

A specific person, responsible to the Project Manager, will be assigned to ensure that all the requirements for a UHV system are strictly adhered to. Careful discipline, control and documentation procedures will be followed. A training program has been started to indoctrinate everyone connected with the project with the necessity for specialized procedures. Similar requirements will be demanded of parts fabricated by outside vendors. Their capabilities for rigorous quality control will be considered as part of the selection process.

E 10 FUTURE OPTIONS

The new Bevatron vacuum system described herein will be capable of achieving pressures of 10^{-10} torr after several days of pumping. If still lower pressures should be desired in the future, then one or all of the following options can be exercised. Provisions will be made so that these options can be implemented at any time in the future (or in conjunction with this project, if such should be desired).

E 10.1 In-Situ Bakeout

It is well-known that in-situ bakeout accelerates gas desorption from the UHV surfaces and results in lower outgassing rates after bakeout. To this end, the vacuum chamber and its internal components will be compatible with future bakeout at 150° C. This should improve the pressure in the vacuum tank by a factor of ten or so. For the curve tanks, the refrigeration system can be modified so as to heat each curve tank rather than cool it. For the tangent tanks, heater strips with thermal insulation are contemplated.

E 10.2 Refrigerated Tangent Tank

As explained elsewhere, the curve tanks will be refrigerated as part of the basic installation, but the tangent tanks

will not. At any time, cooling passages and refrigeration systems could be added to cool the tangent tanks and their internal components down to temperatures similar to those in the curve tank. This option could be appropriate if experience indicates that the highest pressures are in the tangent tanks.

E 10.3 Enhanced Cryopumping of Hydrogen

The high temperature vacuum baking of all materials should produce an outgassing rate for hydrogen of $\sim 10^{-14}$ torr-liter/sec cm^2 or less which can be adequately pumped by discrete pumps only at the tangent sections. It is not anticipated that hydrogen pumping capability will be needed in the curve tank. If, however, hydrogen pumping should be desired in the curve tank, several approaches could be considered. The curve cryopanels could be modified to include activated charcoal or molecular sieve material which are reported to pump hydrogen well at 12° K. Alternatively, it has been observed that coatings of argon or carbon dioxide condensed on the helium-cooled section of the cryopanels act as a catalyst to pump hydrogen at temperatures near 12° K, although there is some evidence that somewhat lower temperatures are needed.

E 10.4 Additional Curve Tank Pumping

As shown in Figure E-4, space has been reserved near the outer radius of the curve tank for additional pumping. More cryopanels of the same or different design from those at the inner radius can be installed. The vacuum would be improved by a factor of 2. Titanium sublimation pumps also can be considered, particularly if additional hydrogen pumping speed is desired.

E 10.5 Guard Vacuum

If, after installation, a significant leak should develop in one or more of the curve tanks, employing a guard vacuum surrounding the curve tank could eliminate the necessity of removing the leaking tank(s) for repairs and subsequent reinstallation. This option consists of evacuating the space between the existing old Bevatron vacuum chamber

and the new UHV vacuum tank (enclosed within it) down to a pressure in the 10^{-5} torr range. The in-leakage to the ultra high vacuum would be significantly reduced, corresponding to the reduction in pressure in the intermediate space. Provisions will be made in the basic design so that the existing chamber can be resealed at a later time. Exercising this option would, among other things, require replacing all of the old cover plates on the old tangent tanks, providing a variety of feedthroughs and providing sufficient pumping speed to achieve the desired pressure (perhaps the existing cryopanels can be used). The 10^{-5} torr pressure assures a low enough pressure to avoid glow discharge and arcing due to induced Bevatron voltages.

E 10.6 Liquid Nitrogen Cooling

Potentially, the curve tank can be cooled to 80° K by passing liquid nitrogen through the coolant passages of the curve tank. The guard vacuum of Option E above would have to be implemented in order to avoid excessive liquid nitrogen consumption and to prevent condensation on the outside of the curve tank. The mylar or fiberglass thermal insulation contemplated in the basic design is not nearly as good a thermal insulator as superinsulation. Therefore, liquid nitrogen consumption may be quite large unless superinsulation is substituted (this requires removal and reinstallation of the curve and tangent tanks.)Superinsulation is not planned for the basic design because excessive eddy currents can flow in the aluminum coating, unless it is carefully broken up, which appears expensive. The possibility that this option will be exercised appears remote.

The main advantage of this option is that it virtually eliminates all gas load due to hydrogen diffusion and due to desorption of constituents that are frozen at liquid nitrogen temperature - which includes practically all contaminants. In addition, the helium-cooled cryosurface no longer requires surrounding chevrons so the pumping speed is increased by a factor or 4 or so.

REFERENCES:

1. R. J. Elsey, "Outgassing of Vacuum Materials - I", Vacuum, Vol. 25, No. 7 (1975).

2. R. J. Elsey, "Outgassing of Vacuum Materials - II", Vacuum, Vol. 25, No. 8 (1975).

3. R. Calder & G. Lewin, "Reduction of Stainless-Steel Outgassing in ultra-high vacuum", Brit. J. Appl. Phys., Vol. 18, p. 1459 (1967)

4. R. S. Barton & R. P. Govier, "The Effect of Cleaning Technique on the Outgassing Rate of 18/9/1 Stainless Steel," Vacuum, Vol. 20, No. 1, p. 1 (1970).

5. Y. Strausser, "Review of Outgassing Results," Varian Associates Vacuum Division Report VR-51 (circa 1969).