PUB-5340

FY 1994 INFORMATION TECHNOLOGY RESOURCES LONG-RANGE SITE PLAN

for the

LAWRENCE BERKELEY LABORATORY

February 1992

Lawrence Berkeley Laboratory
University of California
Berkeley, California

Prepared for the U.S. Department of Energy under Contract DE-AC03-76SF00098

PUB-5340
Copy 1
REFERENCE COPY
Does Not
Circulate
Bldg. 50 Library.

DISCLAIMER

This document was prepared as an account of work sponsored by the United States Government. While this document is believed to contain correct information, neither the United States Government nor any agency thereof, nor the Regents of the University of California, nor any of their employees, makes any warranty, express or implied, or assumes any legal responsibility for the accuracy, completeness, or usefulness of any information, apparatus, product, or process disclosed, or represents that its use would not infringe privately owned rights. Reference herein to any specific commercial product, process, or service by its trade name, trademark, manufacturer, or otherwise, does not necessarily constitute or imply its endorsement, recommendation, or favoring by the United States Government or any agency thereof, or the Regents of the University of California. The views and opinions of authors expressed herein do not necessarily state or reflect those of the United States Government or any agency thereof or the Regents of the University of California.

Lawrence Berkeley Laboratory
1 Cyclotron Road Berkeley, California 94720
(415) 486-4000 • FTS 451-4000

February 26, 1992
ICS-92-150

Ms. Vianna Briscoe, Director
Information Resources Management Division
US Department of Energy
San Francisco Operations Office
1333 Broadway
Oakland, CA 94612

Subject: LBL FY 1994 Information Technology Resources Long-Range Site Plan

Dear ~~Ms. Briscoe~~ Vianna:

Enclosed is the LBL FY 1994 Information Technology Resources Long-Range Site Plan. This Plan is fundamentally a straightforward continuation of last year's Plan, except where the Call has requested reformatting or additional information. I would like to call your attention to the contents of Part 1, Section E (Discussion of general comments/major issues). The first five are carry-overs from last year, but the last one is new. We continue to find that Headquarters asks questions that are founded in ignorance of how the national laboratories work. Any assistance you could provide to encourage the information seekers to seek advice from the field *before* they design their questionnaires would be most welcome.

Please let me know if you have any questions or comments on this, or any other, part of the Plan.

Sincerely,

Dan

D. F. Stevens
Office of Information Technology Resources
MS 50B-2239
415-486-7344 / FTS 451-7344

TABLE OF CONTENTS

PART 1. SITE OVERVIEW

SECTION A. SITE INTRODUCTION 1-1

SECTION B. SITE PROFILE AND MISSIONS SUPPORTED 1-2
Organizational Structure 1-9

SECTION C. SITE INFORMATION TECHNOLOGY RESOURCES STRATEGIC OVERVIEW 1-12
ITR Organization and Management 1-12
Site Strategic Approach for Meeting Information Technology Resources Needs 1-17
LBL ITR Support for DOE Activities, Initiatives, and Policies 1-22

SECTION D. SITE INFORMATION TECHNOLOGY RESOURCES PLANNING PROCESS 1-25

SECTION E. DISCUSSION OF GENERAL COMMENTS/ MAJOR ISSUES 1-28
1. Unsuitability of the LRP Format to the Present Computing Style 1-28
2. Apparent Shortfall in Category R Capacity 1-29
3. Software Management 1-30
4. Quality and the GPO 1-31
5. Requirement to Use AFI 1-32
6. Ill-Considered Requests for Data 1-33

SECTION F. POINTS OF CONTACT 1-35

SECTION G. SPECIAL AREAS OF INTEREST 1-36
1. LBL GOSIP Transition Plan 1-36

Part 2A. SOFTWARE PLAN FOR DOE CONTRACTORS 2A-1

SECTION A. SOFTWARE MANAGEMENT PLANS AND STRATEGIES 2A-1

SECTION B. SOFTWARE INITIATIVES AND RESOURCE REQUIREMENTS 2A-3

SECTION C. SOFTWARE REPORTING REQUIREMENT..... 2A-5

PART 3. COMPUTING RESOURCES PLAN

SECTION A. REQUIREMENTS 3-1

A1. Explanation for increase/decrease in ADP Requirements 3-2

SECTION B. COMPUTING RESOURCES 3-4

B1. Capacity Projections 3-5

B2. *Undefined*

B3. Installed Computing Systems 3-6

B4. Computing Environment 3-9

SECTION C. ADP SYSTEM RESOURCE SHARING 3-20

SECTION D. COMMERCIAL SERVICES ..... N.A.

SECTION E. ACQUISITIONS 3-21

E1. Major Planned Acquisitions/Lease Continuations 3-21

E2. Summary of Major Planned Acquisitions/ Lease Continuations ..... N.A.

E3. Financial Alternative Analyses ..... N.A.

SECTION F. REUTILIZATION OPPORTUNITIES/ OBSOLETE SYSTEM RETIREMENT ..... N.A.

SECTION G. EXAMPLES OF PROGRAMMATIC USES ..... N.A.

SECTION H. ADP BUDGET SCHEDULES 3-22

SECTION I. *Undefined*

SECTION J. RECONCILIATION 3-25

PART 4. TELECOMMUNICATIONS PLAN

SECTION A. TELECOMMUNICATIONS 4-1

SECTION B. FREQUENCY-SPECTRUM-DEPENDENT COMMUNICATIONS 4-20

SECTION C. OTHER TELESERVICES ACTIVITIES AND PROGRAMS..... 4-23

C1. Teleconferencing Activities 4-23

D2. COMSEC Program ..... N.A.

D3. NSEP Program ..... N.A.

D4. Teleprocessing Services Program (TSP) 4-25

PART 5. PRINTING AND PUBLISHING PLAN

SECTION A. ..... N.A.

SECTION B. 5-1

PLANNING AND BUDGET SCHEDULES

PART 1. SITE OVERVIEW

Schedule 1-1. E-Mail Resources 1-41

PART 3. COMPUTING RESOURCES PLAN

Schedule 3A-1. ADPE Requirements 3-1

Schedule 3B-1. ADP Capacity 3-4

Schedule 3B-3.1. Personal Computer/Microcomputer Data 3-7

Schedule 3B-3.2. Installed Personal Computers and Microcomputers as of 9/30/91 3-8

Schedule 3B-4. Software Profile as of 9/30/91 3-19

Schedule 3C-1. ADP System Resource Sharing 3-20

Schedule 3E-1. Major Planned Acquisitions/Lease Continuations 3-21

Schedule 3H-1. Major Computer Acquisitions and Other ADP Capital Requirements for General Management Computers 3-22

Schedule 3H-2. ADP Operating Costs Associated with General Management Computers 3-23

PART 4. TELECOMMUNICATIONS PLAN

Schedule 4-1A. Telecommunications 4-15

Schedule 4-5.1. LBLnet 4-16

Schedule 4-5.2. ESNET 4-17

Schedule 4-5.3. BARRNET 4-18

Schedule 4-5.4. BITNET 4-19

Schedule 4-1B. Frequency-Spectrum-Dependent Communications 4-22

Schedule 4-1C1. Teleconferencing 4-24

TABLES, FIGURES, AND EXHIBITS

Figure LBL1-B1. LBL Staff as of September 30, 1991 1-7

Figure LBL1-B2. Estimated Distribution of LBL Funding for FY 1992 by DOE Assistant Secretary 1-8

Figure LBL1-B3. University of California 1-10

Figure LBL1-B4. Lawrence Berkeley Laboratory 1-11

Figure LBL1-C1. LBL Information and Computing Sciences 1-14

Figure LBL1-C2. LBL Management Organization for Information Technology Resources 1-15

Figure LBL1-C3. LBL Management Organization for Printing and Publishing 1-16

Table LBL4-A-1. Voice Program System Description 4-9

Exhibit LBL4-A1. Existing LBL Telephone System 4-10

Exhibit LBL4-A2. Simplified Overview of LBLnet as of December, 1991 4-11

Exhibit LBL4-A3. Existing Fire Alarm System 4-12

Exhibit LBL4-A4. Cardkey and In-House Energy Management Systems 4-13

PART 1 SITE OVERVIEW

SECTION A. SITE INTRODUCTION

The Lawrence Berkeley Laboratory is submitting this Information Technology Resources (ITR) Long-Range Site Plan in response to the FY 1994 Call. Parts 1, 2A, 3, and 4 are included; Part 5 was submitted in November, 1991. Except for the changes mandated by the Call, this Plan is a straightforward continuation of last year's ITR Long-Range Site Plan.

SECTION B. SITE PROFILE AND MISSIONS SUPPORTED

The Lawrence Berkeley Laboratory was established by Ernest Orlando Lawrence, a physics professor at the University of California who invented the cyclotron in 1929, and founded the "Radiation Laboratory" in 1931 with the construction of the first large (27") cyclotron. From this beginning as a single-purpose, accelerator-based university research facility, LBL has evolved into a multiprogram laboratory operated by the University of California for the U. S. Department of Energy to provide national scientific leadership and to support technological innovation. Specifically, the LBL mission is to:

- Perform leading multidisciplinary research in the energy sciences, general sciences, and life sciences, in a manner that ensures employee and public safety and the protection of the environment;
- Develop and operate unique national experimental facilities for use by qualified investigators;
- Educate and train future generations of scientists and engineers; and
- Transfer knowledge and technological innovations and foster productive relationships between LBL research programs and industry.

Within this mission, the cooperation between LBL and the Berkeley Campus of the University of California forms an important basis for the Laboratory's unique capability to conduct basic research in an environment that combines the intellectual resources of a major university with national laboratory R&D management experience and facilities. To this end faculty in scientific and engineering disciplines play leadership roles along with Laboratory staff in performing research designed to advance DOE program goals.

LBL's close relationship with the University also enables it to provide outstanding research opportunities to large numbers of science and engineering students. More than 600 resident graduate students conduct thesis research at the Laboratory, and many more use LBL facilities or perform collaborative research.

Participation in DOE-supported energy research programs at LBL provides these students with skills in high demand by the nation's high-technology industries. The flow of Berkeley graduates to industry is one of many forms of technology transfer that allows Lawrence Berkeley Laboratory to maintain close and supportive relationships with industry. Another is found in the Center for Advanced Materials, whose research program is aimed at solving fundamental materials research problems identified in discussions with industry. The Human Genome Center and the Superconductivity Research Center for Thin Film Applications have relevance to the biotechnology and electronics industries. Other collaborative centers are the Center for X-Ray Optics and the Center for Building Sciences.

Major national experimental facilities now in operation at LBL include the National Center for Electron Microscopy and two accelerators, the Bevalac and the 88-inch Cyclotron. The centerpiece of LBL's research facilities for the Basic Energy Sciences will be the Advanced Light Source, which will provide soft X-rays and ultraviolet light of unprecedented brightness for research in many scientific fields. This facility, the first large accelerator and storage ring fully designed with CAD/CAM technology, is expected to be operational in FY 1993. The Center for Particle Astrophysics was begun in FY 1989, and construction of the Gammasphere will soon begin. Additional facilities and programs are proposed for initiation during the period addressed by this Plan:

In Basic Energy Sciences:

- The Combustion Dynamics Research Initiative;
- Atomic Scale Synthesis of Advanced Materials;
- The Advanced Transmission Electron Microscopes Program;
- High-Performance Computing and Communications;
- Advanced Light Source Second Complement.

In High-Energy and Nuclear Physics:

- B Factory at PEP;
- SSC Solenoidal Detector Collaboration;

- The Relativistic Heavy Ion Collider Program.

In Health and Environmental Research:

- The Human Genome Laboratory;
- The ALS Life Sciences Center;
- The Global Change Research Program.

In Fusion Energy:

- Induction Linac System Experiments for Heavy-Ion Fusion;
- An Accelerator Test Facility for ITER.

In Conservation and Renewable Energy:

- Advanced Energy Design and Operation Technologies.

LBL is also active in the cooperative development of national and international experimental facilities located at other laboratories and research centers. These efforts include individual detectors, such as the Collider Detector (CDF) and DØ Detector at Fermilab, collaborations at CERN, magnet and beam-transport studies and prototype development for new accelerators, such as the Superconducting Super Collider, and the Relativistic Heavy-Ion Collider. Other proposed cooperative efforts include the program in Energy Technologies for Developing Countries (with other national laboratories and the U. S. Agency for International Development), the Space Exploration Initiative (with NASA), and participation in the creation of a consortium to develop an Advanced Lithography Program. LBL is also the lead Laboratory in the information systems design for the Comprehensive Epidemiologic Data Resource (CEDR).

The following areas of emphasis characterize LBL's ongoing research activities.

Energy Sciences

- **Chemical Sciences**—chemical physics and the dynamics of chemical reactions; structure and reactivity of transient species; electron

spectroscopy; surface chemistry; catalysis; chemistry of the actinide elements; and atomic physics.

- **Earth Sciences**—structure, composition, and dynamics of the continental lithosphere; geophysical imaging methods; chemical and physical transport in geologic systems; isotopic geochemistry; and physicochemical process investigations.

- **Energy & Environment**—building energy efficiency, environmental effects of technology, energy storage and distribution, fossil-energy conversion, industry and utility energy use, and national and international energy policy studies.

- **Materials Sciences**—advanced ceramic, metallic, and polymeric materials for catalytic, electronic, magnetic, and structural applications; superconductivity; instrumentation for surface science; microstructural analysis by electron microscopy; electronic structure of solids and interfaces.

General Sciences

- **Accelerator and Fusion Research**—fundamental accelerator physics research, accelerator design and operation, advanced accelerator technology development, accelerator and ion-source research for heavy-ion fusion and magnetic fusion, X-ray optics, and construction of the Advanced Light Source.

- **Nuclear Science**—relativistic heavy-ion physics, medium- and low-energy nuclear physics, nuclear theory, nuclear astrophysics, nuclear chemistry, studies of transuranium elements, nuclear data-evaluation, and detector development.

- **Physics**—experimental and theoretical particle physics, advanced detector development, Particle Data Base for the high-energy physics community, astrophysics, and applied mathematics.

Life Sciences

- **Cell and Molecular Biology**—gene expression and molecular genetics, cellular differentiation and carcinogenesis, hematopoiesis, structural

biology, DNA repair and recombination, radiation biology at the cellular and molecular levels, and the Human Genome Center.

- **Chemical Biodynamics**—structural and molecular biology of nucleic acids and proteins, genetics and mechanisms of photosynthesis, photochemistry, and mechanisms of mutagenesis.

- **Research Medicine and Radiation Biophysics**—diagnostic imaging, radiotherapy and radiosurgery, biochemical mechanisms of disease, and medical instrumentation.

Resources

- **Environment, Health, and Safety**—technical support for safety and environmental protection, radiation associated with accelerator technology, advanced dosimeters, dispersion of radionuclides, and waste management.

- **Engineering**—engineering design, planning, and concept development; shops and technical support for scientific programs and research facilities; advanced accelerator components; electronic and mechanical instrumentation systems; and fabrication of detectors and experimental systems.

- **Information and Computing Sciences**—advanced software engineering, information management, scientific imaging and visualization tools, computation tools for the human genome project, and biostatistics.

Figure LBL1-B1

LBL Staff as of September 30, 1991

(Total = 3370)

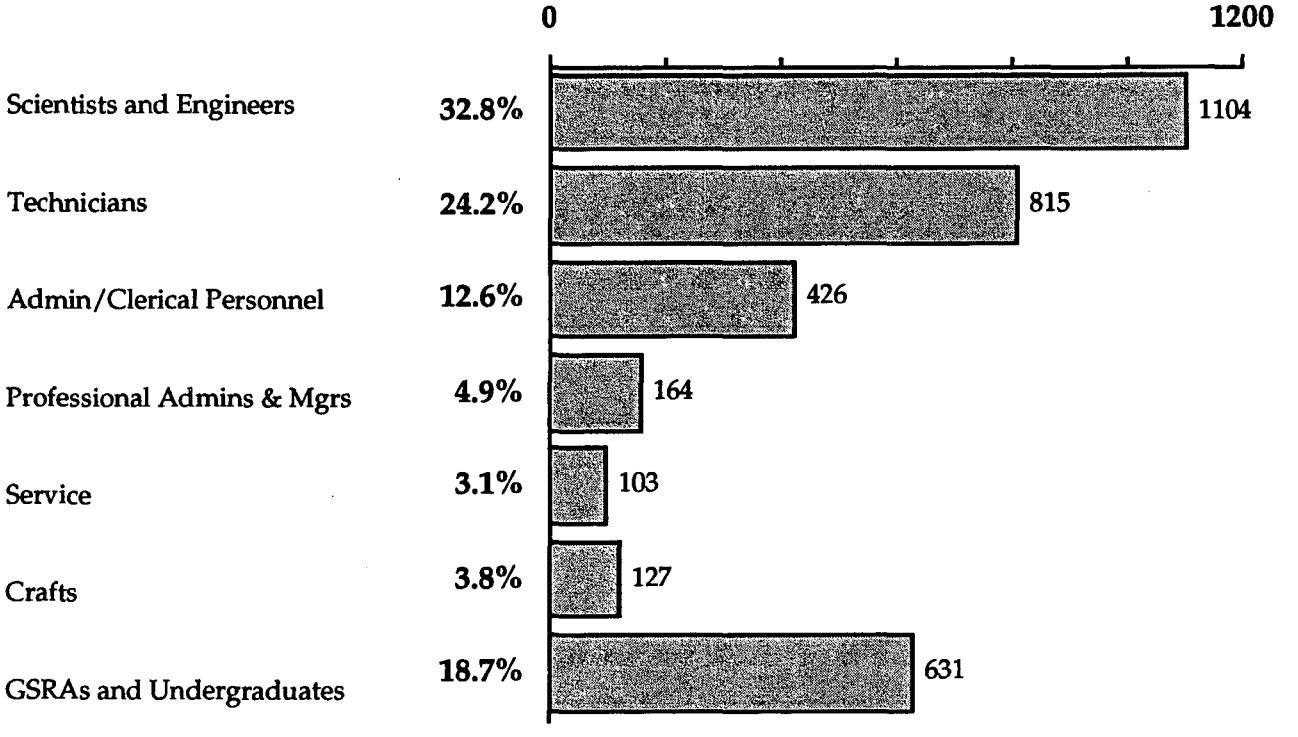

Figure LBL1-B2

Estimated Distribution of LBL Funding for FY 1992

by DOE Assistant Secretary

(Total = $244.8 million)

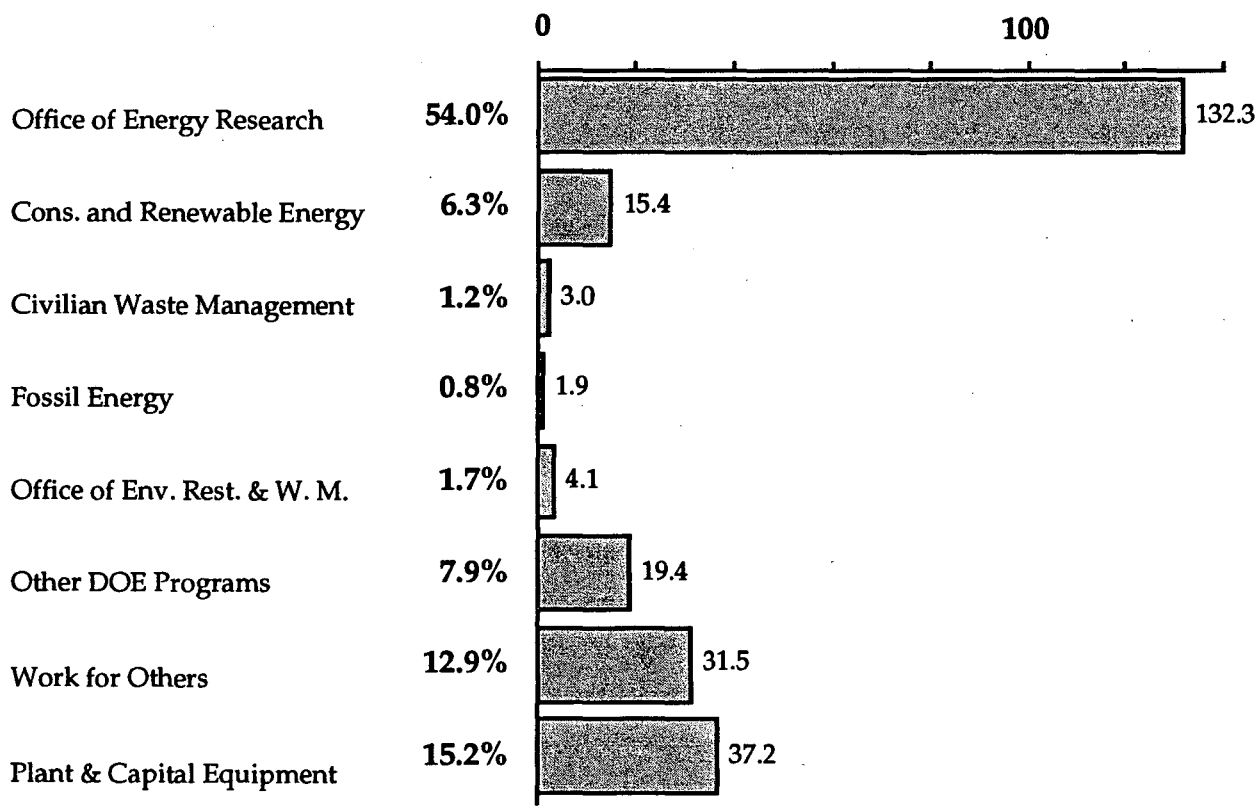

Organizational Structure

LBL is operated under contract for DOE by the Regents of the University of California. Under the University's organization, each Campus and Laboratory is independent within policy guidance and oversight provided by the Office of the President. The Laboratory Director reports to the President of the University, who is supported administratively by the Senior Vice-President for Academic Affairs, the Senior Vice-President for Administration, and the Special Assistant for Laboratory Affairs. (See Figure LBL1-B3.)

The Laboratory consists of ten scientific Divisions, supported by the Directorate and by four support Divisions. The senior management committee of the Laboratory is the Director's Action Committee (DAC), composed of the Director, the Deputy Director, the Associate Laboratory Directors for Administration, Planning and Development, and Operations, plus Division Directors representing each of the three programmatic areas of the Laboratory. (See Figure LBL1-B4.) Independent internal oversight for environmental protection, health, and safety, quality assurance, and conduct of operations is provided by the Office of Assurance and Assessment, which reports to the Associate Laboratory Director for Operations.

Figure LBL1-B3

UNIVERSITY OF CALIFORNIA

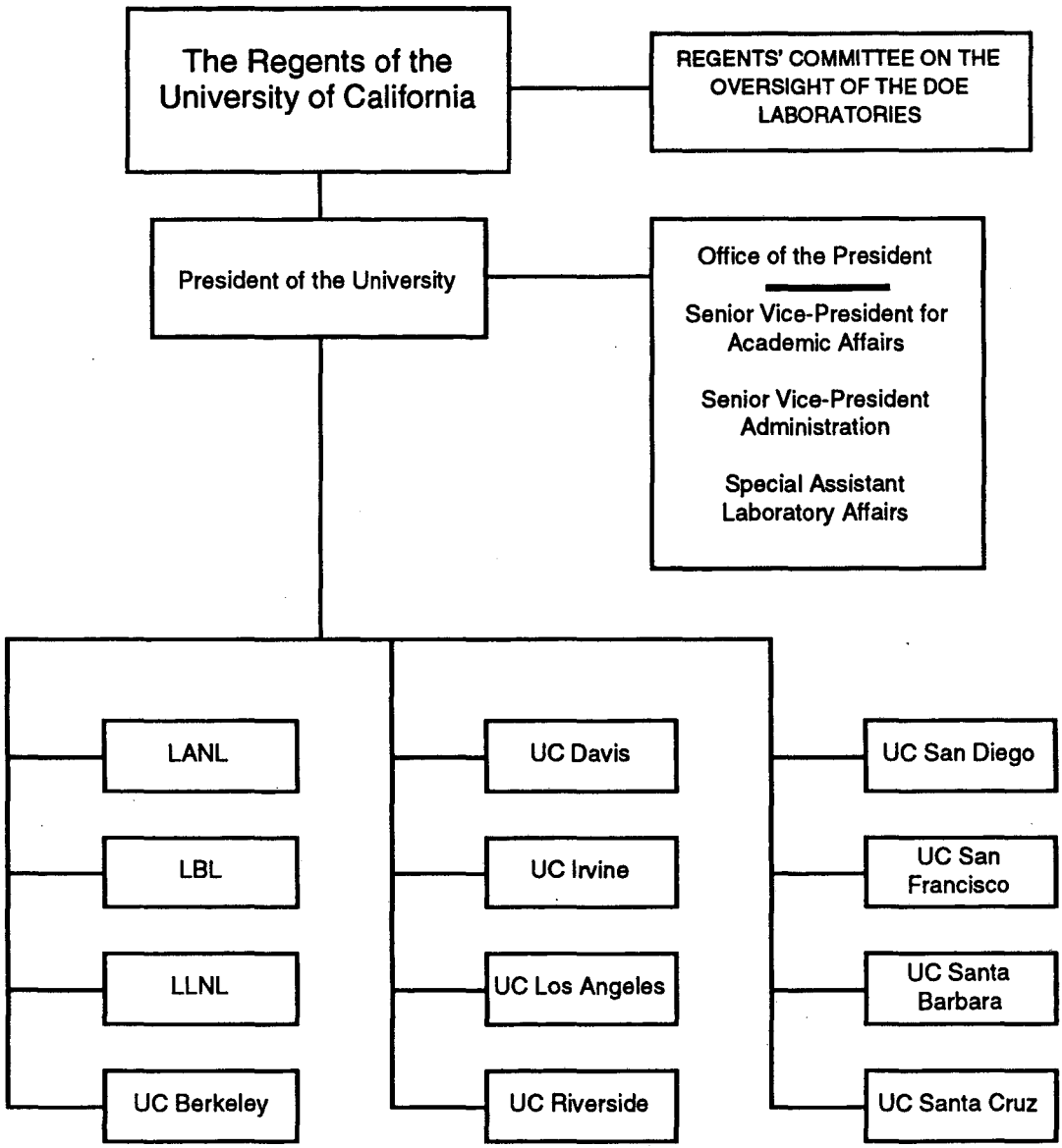

Figure LBL1-B4

LAWRENCE BERKELEY LABORATORY

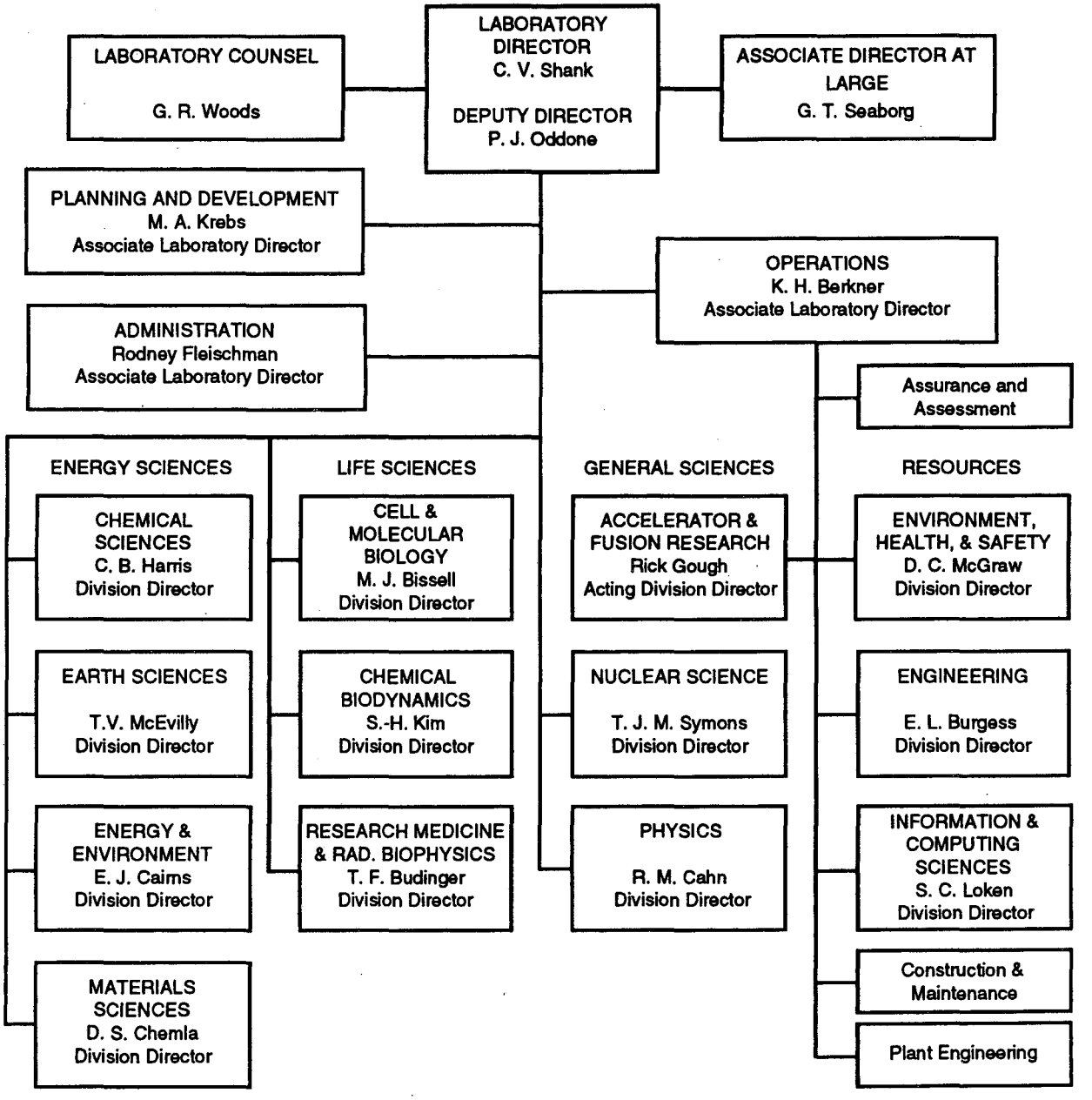

SECTION C: SITE INFORMATION TECHNOLOGY RESOURCES STRATEGIC OVERVIEW

ITR Organization and Management

Most of the planning for, and operational management of, information technology resources is concentrated in the Information and Computing Sciences Division (ICSD). Figures LBL1-C1 through LBL1-C3 show the large-scale organization of ICSD and the LBL management organization for various information technology resources.

Although all Divisions of the Laboratory contain information processing functions, information services are a secondary concern for most of the groups involved. Seven groups for which such functions are primary are described briefly below; all but the Computer Systems Engineering and the Data Processing Services Departments reside within the Information and Computing Sciences Division.

- The Communications and Networking Resources Department (CNR) has responsibility for developing the Laboratory's communications resources, including both local and external connectivity. Detailed plans may be developed by the groups that need the services, but CNR reviews all of these Divisional plans to ensure that they are in keeping with LBL's overall policies, plans, and strategies. CNR also manages LBL's telephone services and LBLnet, the Laboratory-wide networking facility.

- The Office of Information Technology Resources Planning (ITRP) has responsibility for developing policy and coordinating planning for computing technology for the entire Laboratory, including equipment acquisitions and computer security.

- The Computing Resources Department maintains and operates the Central Computing Facility, provides system maintenance support for many of the small distributed systems at LBL, maintains LBL's access to the National Energy Research Supercomputing Center (NERSC), and provides workstation advice and support.

- The Technical Information Department has responsibility for all centralized printing and publishing services, both in-house and external. This includes technical writing and editing, illustration and photography, operation of the LBL Print Plant, conference coordination, and video and audio services.

- The Advanced Development Project conducts investigations aimed at defining the computing style of the future and proposing cost-effective means to bring it about, including advanced visualization, systems engineering, and a highly interoperable environment.

- The Computer Systems Engineering Department (CSE), in the Engineering Division, designs and builds computer control and data acquisition systems for Laboratory programs. It conducts research in computer networks and provides system and applications software for a variety of research and engineering projects. CSE also supplies in-house maintenance for many of the Laboratory's computers.

- The Data Processing Services Department (DPS), in the Administration Division, provides the bulk of the Laboratory's administrative computing services, including payroll, stores, and the various accounting functions. DPS also provides interactive access to centralized databases for the preparation of both recurring and *ad hoc* reports.

Smaller computing functions exist within many of the Laboratory's research organizations. They are dedicated to computer applications support in a particular research discipline. Examples are found throughout the Laboratory.

Figure LBL1-C1

LBL Information and Computing Sciences

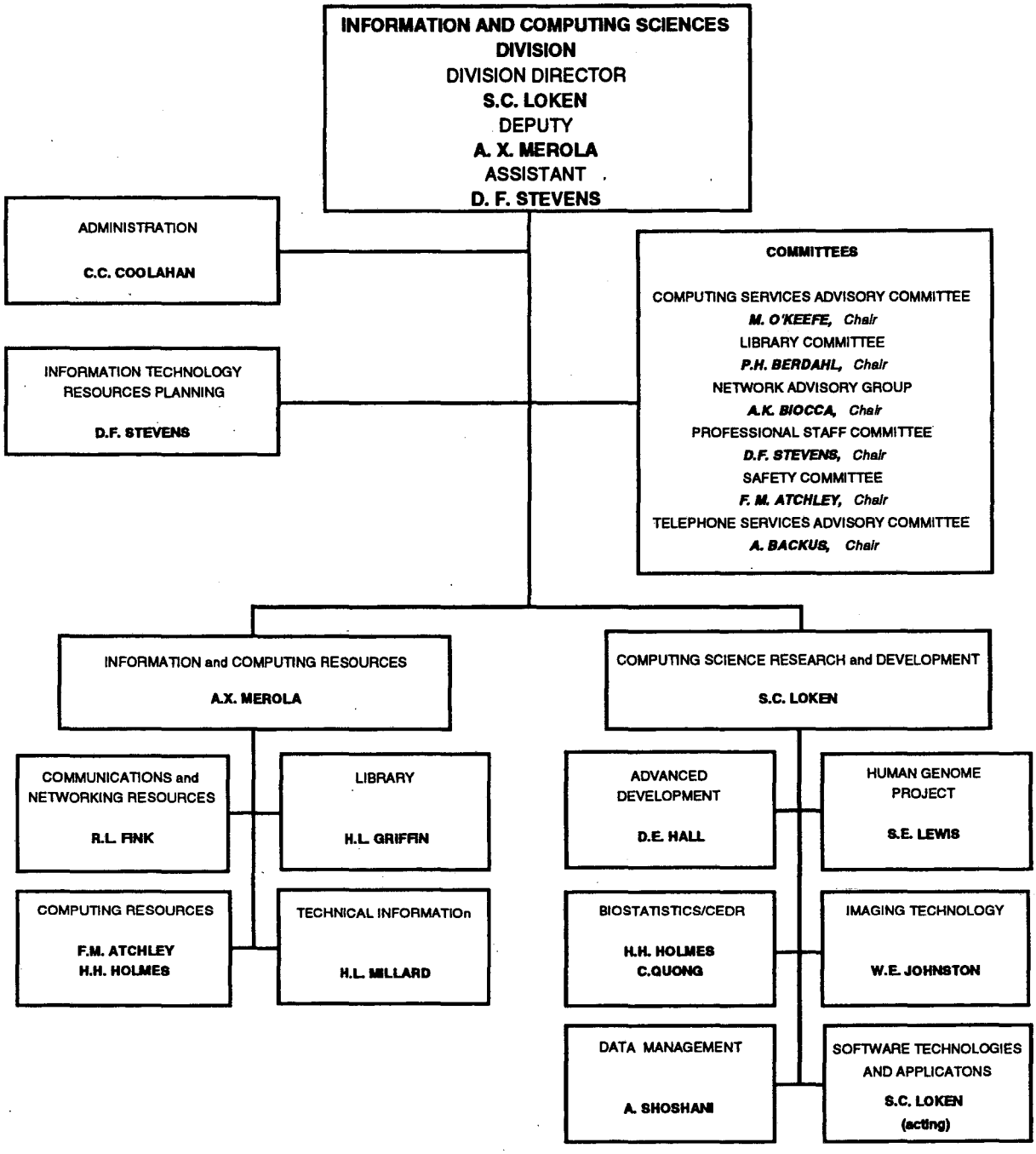

Figure LBL1-C2

LBL Management Organization for Information Technology Resources

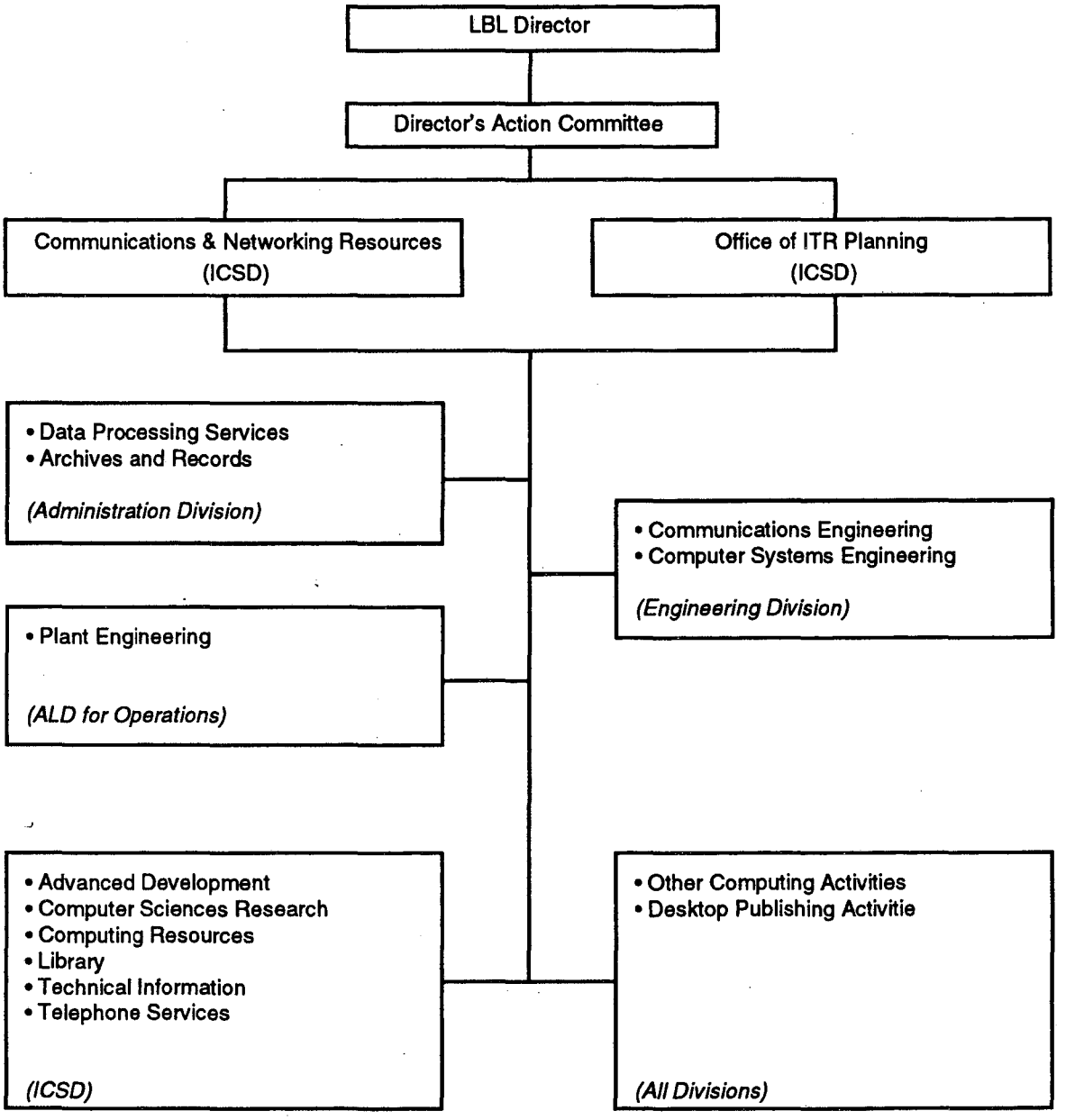

Figure LBL1-C3

LBL Management Organization for Printing and Publishing

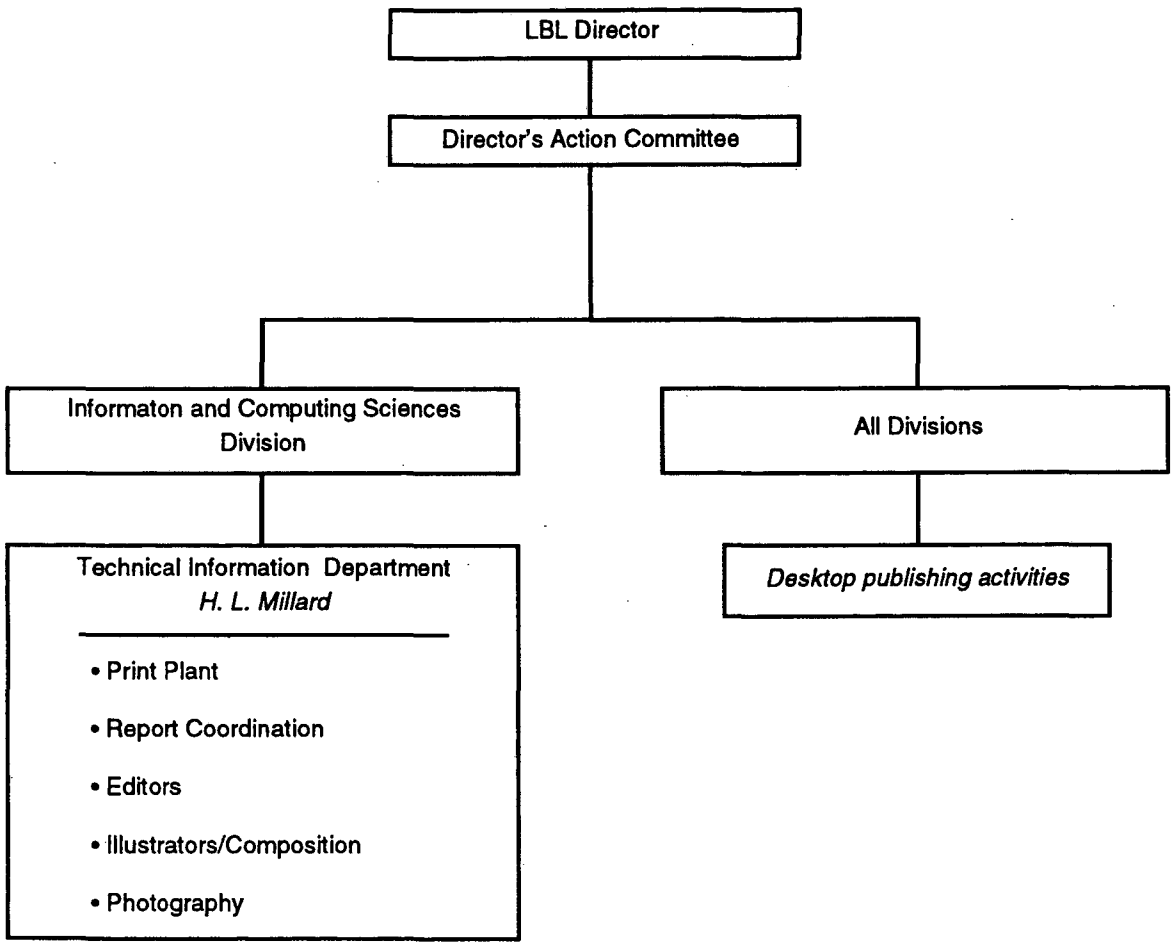

Site Strategic Approach for Meeting Information Technology Resources Needs

The goal of the LBL information technology resources site strategy is to provide computing, office automation, and voice and data communications to meet the long-range needs of the Laboratory in a flexible and cost-effective manner. The fundamental element of this strategy is the development and operation of a distributed computing network offering local access to a large-scale, high-speed interactive computing resource, shared archival mass storage, satellite computers, and workstations, and remote access, via national and international networks, to other computer resources, such as supercomputing. This network approach facilitates the versatile and flexible use of existing computing resources and allows LBL to respond quickly and effectively to changes in computing needs.

In developing the specific strategies (outlined below) necessary to realize this general strategy, the following assumptions were made:

- For much of the work of the Laboratory, the choice is no longer whether or not to employ information technology resources, but which among several information technology approaches is the most fruitful and cost-effective. This reflects both the nature of the work being attempted and the continuing development of computing technology. With respect to the former, the experiments being conducted and the models being analyzed are increasing in both size and complexity; with respect to the latter, the range of tools now becoming available to the scientist is enormous, encompassing desktop applications of significant power, unprecedented techniques for visualizing scientific data, and ever increasing computational power and storage capacity.

- The pace of hardware improvement will continue at its current level at least until the end of the century. It will be evidenced in speed advances for single processors, in the creative application of multiple processors, in increased transmission bandwith at all distances, and in expanded storage capacity at all levels, including the desktop.

- The rate-of-change of computing *style*, which is a function of software advancement even more than of hardware improvement, will

accelerate over the next decade or two, producing a totally new working environment.

- Large international collaborations will continue to be the norm in some LBL programmatic areas. The demands of these collaborations will force the development of vast—in both scope (connectivity) and bandwidth—networking capability, which in turn will influence the way in which computing is done in other, traditionally more 'local' disciplines.

Specific Strategies

1. *The Seamless Environment*: The Laboratory will promote the continuing development of a workstation-based "seamless" computing and communications environment, so that all information technology resources are transparently available, no matter where they reside. In essence, the desire is to provide the individual scientist or technician the illusion that all the resources he needs are resident at his workstation. This will be accomplished by interconnecting the workstations locally through high speed networks, and extending the local networks nationally (and internationally) through the Energy Sciences network (ESnet), HEPnet, NSFnet, BITNET, BARRNET, and other networks as they become available and desirable. The effect will be to create a virtual LBL "supercomputer" consisting of interconnected workstations, mid-range computers, mass storage systems, and remote supercomputers. The "backplane" of this virtual supercomputer will be the LBL internet.

2. *Scientific Workstations*: The Laboratory will encourage and support the increased use of state-of-the-art workstations as the primary means of computing at LBL. This will be accomplished by reducing the amount of specialized knowledge that is necessary to use workstations effectively, and by providing appropriate support services such as consulting on tool-oriented questions, assisting with system management, providing site licenses, and identifying particular individuals to become Laboratory experts in areas of interest.

3. *Continuous Upgrade of the Central Facility*: The Information and Computing Sciences Division (ICSD) will continue the systematic

replacement of equipment in the Central Facility as it becomes cost-*in*effective to continue its operation.

There is every reason to expect the rapid technological progress of the past few years to continue (at least for the next several years) to decrease the cost of computing, or conversely, to provide ever more computing for the same cost. Given this fact, and the fact that maintenance and (to a lesser extent) operational costs for a given technology gradually increase over the life of the equipment, it is economically irresponsible not to retire equipment regularly and systematically, replacing it with current equipment that is less expensive to run. While this policy ensures a continuing expense to upgrade equipment, it provides the user community with more computing for their dollar.

At the current rate of technological improvement, the cost-effective lifetime of computing equipment (with the possible exception of the largest supercomputers) is less than three years. Thus LBL has embarked on a program of ongoing replacement of the principal hardware of the central computing facility. It is noted that we expect change in the operating system environment to occur more slowly. Until application portability becomes a reality, the conversion costs to the users of frequent change will remain prohibitive. Thus, although we foresee a declining interest in VMS (and a corresponding growth in Unix use), we expect it to remain in use for at least 5 more years, and perhaps longer, if VMS hardware returns to former levels of price/performance.

In pursuing this strategy, economic analyses are done to determine how to obtain the maximum computing for a given budget. Given the rapid pace of development that we expect to continue for several years, the purchase of general-purpose equipment, especially CPU's, appears to be less than optimally cost-effective.

4. *Assessment of Needs*: The Laboratory will maintain a continuous program to assess the information technology resource needs of the scientific programs and to ensure the availability of both the products and the qualified staff necessary to meet those needs. This will be accomplished through liaison activities, internal reviews, product assessments, and, through the Computer Sciences Research and Advanced Development

groups, maintaining an awareness of current research in computing and the development of new scientific research tools.

5. *Adoption of New Technology*: The Laboratory will adopt new information technology as it becomes integrated into effective research tools. ICSD will take the lead in evaluating new programming tools and techniques, introducing them into the Laboratory, and educating the Laboratory in their use. These tools include those, such as CASE tools, aimed at easing the development and maintenance of large programming efforts, as well as those, such as object-oriented programming and advanced visualization techniques, aimed at increasing the effectiveness of the end users.

The process of evaluating and selecting appropriate tools can be a lengthy one and, on some small projects, complex enough to discourage the use of any of these productivity-increasing tools. For this reason, the evaluation and demonstration of this class of software tools can most effectively be accomplished by a central group, either directly or by sponsoring appropriate demonstration projects. The creation of the Imaging Technology Group in FY 1990 is an example of the mobilization of ICSD staff to provide enhanced support to the Laboratory in an area of emerging technology.

6. *Supercomputing Access*: The Laboratory will work to provide adequate access to supercomputing for all LBL scientific programs. This includes improving the access to the OER supercomputer centers and providing support for access to other supercomputer facilities (such as other DOE Laboratories or NSF centers) for those programs not having access to the OER centers. The Laboratory will also investigate alternative forms of supercomputing, such as massive parallelism, as they become available.

7. *Data Management*: The Laboratory will provide a large-capacity, centrally-administered data management facility that is accessible to the whole LBL research community through LBLnet. This is one area where the technology has not moved as rapidly as one might wish, but it now appears that the time is right. ICSD has acquired and installed a universally-accessible mass storage system, based on the IEEE multilevel storage model. The system is now in beta-test, and is expected to be available for general use in mid-FY92.

8. *LBLnet*: The Laboratory will continue to provide and support LBLnet, and to extend and improve it as necessary. This includes access for all scientists at LBL, increasing bandwidth as necessary, expanding and improving our connections to the research community beyond LBL, and participating in the development of appropriate standards.

9. *Computer Security*: The Laboratory will provide these services in a way that provides computer and network security consistent with the needs of the research community. However, we are experiencing growing tension between the data-sharing needs of research collaborations and the data-protection needs of certain applications that we hope to shift from centrally-process to distributed mode. We intend to convene a task group to address this problem early in calendar year 1992.

LBL ITR Support for DOE Activities, Initiatives, and Policies

Direct support for Departmental goals

ES&H Activities: LBL has moved to increase the availability of ES&H materials to LBL staff by installing on-line copies of the LBL Health and Safety Manual (PUB-3000) and an MSDS library. The access to PUB-3000 is provided through a bibliographic database system that permits context searches of the entire publication for any word or phrase selected by the user. LBL's self-assessment activities are supported by a large database that maintains current status information.

Management Reform: LBL is the lead Laboratory for the development of the information system for the Comprehensive Epidemiologic Data Resource (CEDR).

Science Education: Since its inception LBL has been DOE's leading laboratory in terms of the number of graduate students and post-docs on site. More recently, through its Center for Science and Engineering Education, LBL has been a member of the Bay Area Science and Technology Education Collaboration (BASTEC), aimed at improving science and engineering education in the high schools of the San Francisco Bay Area.

Development and Deployment of New Technologies: The annual IR-100 awards are one of the most reliable indicators of successful technology transfer. LBL staff have received 16 of these awards in the past seven years. In addition, Van Jacobson of LBL was awarded the Federal Laboratories Consortium (FLC) Special Award for Excellence in Technology Transfer, "for innovation in both research and technology transfer of algorithms that have significantly improved the performance of local and wide area computer networks".

LBL supports internal DOE activities by providing the Chair of the ESnet Steering Committee.

Activities supporting DOE's Vision 21

Institutionalization: At the Department level, LBL has provided continuing support to the efforts of the Office of IRM Policy to review existing policies and to develop new policies to cope with the changing IRM

environment. Most recently, we have offered to serve on the proposed working groups addressing the future of the long-range IRM planning process.

At the Laboratory level, our site strategy encourages the integration of appropriate information technology into the individual work environments. We have also begun the process of creating a whole-Laboratory approach to information management. We expect this to be a significant effort, extending over several years.

Customer Satisfaction: In our rôle as customers of DOE Headquarters policy makers, we have endeavored to be responsive to the legitimate demands for information placed on the Office of IRM Policy by outside agencies, while remaining constructive critics of the processes that affect us. In our rôle as suppliers to the staff at LBL we have established several mechanisms to monitor the suitability and quality of the services we provide to the Laboratory. The most recent of these activities was a series of meetings in December and January between ICSD staff and concerned users in each of the other divisions at the Laboratory. The results of these meetings will be incorporated into our plans for development over the next two or three years.

Standards Development: LBL is active in several branches of the standards-development process that are of particular interest to DOE. These include participation in X3 (the ANSI-accredited standards committee for Information Processing Systems) and its technical subcommittees, including those dealing with network issues (such as FDDI, FFOL, HiPPI, Fiber Channel, and SCSI) and text and office applications and languages (including SGML, Hytime, ODA/ODIF, etc.); in the ASME committee working on the application of the precepts of NQA-1 to the research laboratory environment; the planning and development of ESnet; participation in the Internet Engineering Task Force (IETF); the implementation of GOSIP (Government OSI Profile; OSI is the international standard model for network interconnection); the development of DOE's GOSIP migration plan; and participation in the NIST OSI Implementer's Workshops.

Implementation of New Technologies

FDDI: In addition to participation in the development of the relevant standards, LBL has plans for a phased implementation of FDDI, including beta-testing of commercial implementations, over the next several years.

Image Technology: LBL has established a center of expertise in high-performance image technology to investigate imaginative imaging techniques and to assist LBL scientists in the effective application of these tools.

High-performance Networking: LBL is developing new implementations of existing protocols to make more effective use of network bandwidth both at the high end (megabit- to gigabits-per second) and the low end (300-56000 bps). LBL is also designing new methods for handling the real-time aspects of video conferencing on existing computer networks such as ESnet. LBL is an active participant in the BLANCA, Bay Area Gigabit, and MAGIC gigabit networking testbeds.

ESnet T3 Upgrade project: LBL is participating with ESnet staff in proving technology concepts and demonstrating high-performance applications at speeds beyond T1.

SECTION D. SITE INFORMATION TECHNOLOGY RESOURCES PLANNING PROCESS

The Office of ITR Planning (ITRP) and the Communications and Networking Resources Department (CNR) share the policy and planning coordinating responsibility for all Laboratory activities involving information technology resources, with ITRP taking responsibility for computing aspects, and CNR handling all communications, including computer networking, telecommunications, telephone services, etc. These duties include:

- Implementation of Laboratory, University, and DOE policy and procedures for information technology resources.
- Coordination with institutional planning and long-range site development planning, with the Office of Planning and Development.
- Direction and development of Laboratory plans for information technology resources based upon short-term and long-range requirements and strategies.
- Periodic review of computing and information-processing activities to ensure implementation of the plans and to provide a mechanism for making adjustments.
- Management of the Integrated Communications System.

At the beginning of each planning cycle ITRP informs the Divisions of the information required to complete the current ITR Long-Range Site Plan. The Divisions in turn provide ITRP with workload projections and resource requirements. Workload projections are developed via a number of techniques, depending upon the nature of the work. For high-energy physics, for example, projections depend upon the expected number of events for ongoing and planned experiments, and upon the complexity of each event. For modeling studies, the projections depend upon the direction of development of the models involved (moving from 2-D to 3-D spatial meshes, increasing the number of atoms in a simulated molecule, applying more complex mathematical techniques, etc.). In many cases the limiting factor on workload is not the science the researcher is trying to do but the budget within which he or she must work.

The annual planning cycle is as follows:

March - September: Coordination with Institutional Plan and Site Development Plan preparation. Review of GPP, GPE, and MEL-FS plans.

April - November: The Institutional Plan is prepared by the Associate Laboratory Director for Planning and Development.

December: Laboratory Divisions provide ITRP with workload projections for all facilities (Divisional systems, the LBL Central Facility, and the OER Supercomputing resources) and budgetary information for the reportable systems under their control. ITRP updates the Laboratory Overview and the Site Strategy segments to conform to the Institutional Plan.

December - January: ITRP prepares a first draft of this Plan.

January - February: The Plan undergoes several reviews (Division representatives, Computing Services Advisory Committee, Division Directors, the Director's Action Committee, and the Director's Office), and ITRP prepares the necessary revisions.

February: DOE San Francisco Field Office review and submission to DOE Headquarters.

In addition, throughout the year, all divisions are kept informed of the plans and progress of the Central Facility, LBLnet, and Laboratory-wide access to external facilities through their representatives on the Computing Services Advisory Committee. That committee continually monitors the level of service offered by the Central Facility and works with the management of the Information and Computing Sciences Division to prepare timely plans for the provision of necessary services.

Strategic and short-range planning in specific areas may be handled by the department concerned or, in the case of issues that affect the entire Laboratory, by an *ad hoc* project, called a Technical Planning and Evaluation Group (TPEG). Participation in the TPEG process is open to all interested members of the Laboratory community. The results of long-range TPEG projects are incorporated into the ITR Long-Range Site Plan as appropriate.

The Laboratory's Institutional Plan provides the foundation and the general directional guide for the development of this plan for future computational resources.

Plan Review

Since Laboratory research scientists and program managers are the source of the data used in the development of this plan, they are also the first reviewers. Also, the plan has been thoroughly reviewed by the Computing Services Advisory Committee, the Telephone Services Advisory Committee, Division Directors of all the Laboratory Divisons, the Office for Planning and Development, the Director's Action Committee, and the Director's Office. ITRP and CNR review the technical aspects of the plan. Equipment acquisitions involving General Purpose Equipment funds (GPE) are reviewed through the Laboratory's GPE cycle, involving the Budget and Resource Planning Office, the Associate Laboratory Directors for Administration, and Planning and Development, and Operations, and the Director's Action Committee, before they are included in the plan. The plan receives a final review by various components of the San Francisco Field Office before it is forwarded to DOE Headquarters.

Implementation

Implementation of the plan is the responsibility of ICSD, and is accomplished through the appropriate Laboratory computing and telecommunications functions. Laboratory research programs that initiated the requirements used in the formulation of the plan play an active role in the various phases of implementation. Periodic reviews and progress assessments concerning the appropriate services are conducted by the Computing Services Advisory Committee and the Telephone Services Advisory Committee.

SECTION E. DISCUSSION OF GENERAL COMMENTS/MAJOR ISSUES

1. Unsuitability of the LRP Format to the Present Computing Style

The LRP format was developed in a time when most of the computing resources in DOE and DOE contractor sites were concentrated in relatively large centralized facilities. The computing environment today is quite different for many of these sites: Each site has many centers of computing, and the "central" facility may no longer account for a majority, or even a significant share, of the computing power at the site. Instead of being handled by a monolithic organization operating a large central facility, computing is increasingly done on workers' desktops, on personal systems.

In the old style, because all computing was funnelled through a single organization, it was possible for that organization to monitor usage and to make rational projections of future usage, based upon institutional-wide patterns. At LBL today, the capacity of the Central Facility is a very small percentage of the total computing capacity in regular use at the Laboratory. Thus even if our estimates of Central Facility usage and requirements were 100% accurate they would provide little information about the state of computing at this Laboratory.

The current LRP is tailored to an environment where IRM is centralized rather than institutionalized, and is strongly technology- and equipment-oriented. We believe it should adopt more of a true planning approach, with a statement of site strategy (and how that strategy fits into Vision 21 and the DOE Departmental IRM strategy) accompanied by narrative describing the site's approach to implementing its strategy. Such tabulation of specific resources as is required by OMB, *et al.*, should be relegated to an appendix. Further, since the preparation of these tables is not useful in our institutional planning processes, we recommend that the Office of IRM Policy undertake vigorous lobbying efforts to relieve us of the effort necessary to complete them.

2. Apparent Shortfall in Category R Capacity

The Category R requirements shown in Schedule A1 for fiscal years 1991-1998 exceed the Category R capacity represented in Schedules B1 and C1 for those years. The apparent deficit will be supplied by the OER Supercomputer facilities at the NERSC and SCRI.

3. Software Management

There are two DOE Orders that bear directly on software management: 1330.1C and 1360.4A. Both of them give cause for concern. In the case of 1330.1C, our concern arises both from the ambiguity of Order itself and from the guidelines that are being prepared to accompany it. We take the fact that DOE has recognized the necessity to prepare guidelines as *prima facie* evidence of the ambiguity of the Order. We would prefer to see the order rewritten to eliminate the need for guidelines, for it is our experience that guidelines have a strong tendency to become requirements, at least in the eyes of auditors. In the present case, the (November, 1991) draft guidelines (as, indeed, the Order itself) have a pronounced bias towards a particular style (the so-called "waterfall" model) of software development, a style that is neither universally followed nor universally accepted as optimal.

With respect to 1360.4A, LBL believes that a single centralized software facility for the "collection, review, announcement, consultation, dissemination, archiving, and other related activities of software management" is an outmoded solution to the "problem" of software distribution. Such facilities made sense in the days when the primary connections between users in different institutions were the telephone and the postal service. In today's environment, multi-institutional collaboration is the normal order of business, and collaborators are joined electronically by national and international networks. They can exchange programs and information far more easily with each other directly, and receive better advice and faster service, than is possible through a centralized service. Furthermore, when such exchanges are conducted within a collaboration, the participants are not faced with the indexing problem. As anyone who has tried to use the Yellow Pages knows, the actual availability of the information one needs is a much a function of the quality of the index as of the information itself. The collaborators already know the vocabulary necessary to communicate clearly and succinctly; the operators of a central facility can only guess at it. LBL believes that in most cases, the exchange of scientific and technical software takes place quite efficiently and cost-effectively via direct communication between peers, and that interposition of a central repository is among the most cost in-effective methods that can be employed.

4. Quality and the GPO

DOE is placing increased emphasis on quality of operations, through DOE Orders 5480.19 (Conduct of Operations) and 5700.6B (Quality Assurance). Among the practices mandated by these orders is that of assuring that suppliers of goods and services to LBL also meet acceptable quality standards. We accept this principle, and would like DOE's support in applying it to our off-site printing.

In particular, we continually encounter problems with GPO-approved printers who cannot meet our quality standards at the first attempt on many printing jobs. Unfortunately, it is not just a matter of redoing the job to get it right, although that does work in some instances. It also involves negotiation with GPO to secure agreement that quality is lacking. It involves substantial loss of time, often to the extent that customers are forced by lack of time to accept sub-standard work. It involves non-local travel to conduct press inspections—making these inspections much more time-consuming and costly than would be the case with a local supplier—because of GPO's requirement that all requests for bid be national.

LBL has complained repeatedly to DOE about this situation, with no success. DOE should either acknowledge its inability to solve the problem, and explicitly exempt printed products from the quality program, or should enable its contractors to insist upon the quality they consider necessary.

5. Requirement to Use AFI

LBL is disturbed by the requirement (in Part 2A, Section C) that information be submitted via AFI. This requirement entails the necessity to acquire systems of a specific architecture, and to train staff in their use, *whether or not such systems are cost effective*. We believe such restrictions to be inappropriate.

6. Ill-Considered Requests for Data

a. Poorly expressed requests

The ITR Plan has several times been the vehicle employed by DOE to collect information on specific aspects of information resources management. While we recognize the necessity to collect such information, we have often found the format adopted to be of marginal utility. Schedule 1-1 (E-mail resources) is the latest example of such an attempt: It is based upon an incomplete understanding of the underlying technology, and any information derived from the data collected is likely to be *dis*information. The questions are ill-posed and appear to be based on a model for electronic mail that has little relationship with the way in which it is used in the national laboratories, and fundamental terms (such as E-mail and subscriber) are not defined. For example, Schedule 1-1 appears to assume the existence of a single E-mail system on site; we use several E-mail systems (or systems that could be classed as E-mail). The Schedule appears to assume that there is somewhere a list of the sites with which our users exchange E-mail; we have no way to keep track of the other sites to which our users connect, and see no reason to do so. (Anyone who has access to the Internet can send a message to almost any user connected to our local area network.) The Schedule appears to assume that E-mail is available only to a select band of users (called "subscribers"); we believe that inter-site networking is absolutely necessary for the conduct of research, and encourage all our users to use whatever E-mail system they are most comfortable with, and do not require them to "subscribe" to anything. In the list below, we have tied these comments to the item numbers used in Schedule 1-1.

2. System (singular) used. This implies that a normal site uses at most one E-mail system. LBL has several on site (the exact number depending upon how E-mail is defined); and our personnel use a completely unknown number at other sites.

3. Location. To identify the "other sites" at which we use E-mail is to identify all of Internet plus a few thousand other places.

4. Service Area. This notion is not particularly meaningful. Does it mean the area within which LBL staff receive E-mail? To which they send E-mail? The extent of the particular immediate service to which they

connect? The extent of the linked services with which they can exchange messages?

5. Number of suscribers. "Subscriber" is also undefined. It has no meaning at LBL.

b. Programmatic breakdown of requirements and costs

There are now three schedules or sets of schedules that request detailed programmatic breakdowns of institutional requirements: 3-A1, 3-H2, and 4-1. In the case of 3-A1 and 3-H2, we are required to assign institutional general support requirements to DOE programs, and in 4-1 we are required to provide a programmatic breakdown of telecommunications costs. Some slight justification for such a breakdown exists with respect to the cost data of 3-H2, because overhead costs are, indeed, borne by the programs. For 3-A1 and 4-1, however, the situation is somewhat different.

In the case of 3-A1, as we have noted in the narrative for Part 3, Section A1, this breakdown provides extremely misleading indications of increased programmatic computer usage by small programs as a consequence of rapid growth in the administrative use of distributed computing. Since this usage is in fact institutional rather than programmatic, it would seem more reasonable to return to the former method of including a line-item for "General Support".

In the case of 4-1, we are faced with the problem of translating (LBL) organizational costs into (DOE) programmatic costs. At LBL, telephone costs are, not unreasonably, accrued by the LBL organization concerned. Each telephone is associated with a single LBL Division, and that Division is responsible for the charges accumulated from that instrument. Most LBL Divisions, however, deal with multiple DOE programs, and may discuss matters pertaining to several programs—or none—in the course of a single telephone call. (For example, to which program should we charge the cost of a call to the DOE Office of IRM Policy to discuss a question about our preparation of this LRP?) When this was pointed out at the ITR Planning meeting in September, the only response was that this would make the Part 4 schedules more consistent with the Part 3 schedules. We believe that to be insufficient reason to impose the immense increased administrative burden that observance of this requirement would entail. We have therefore elected to ignore this requirement.

SECTION F. POINTS OF CONTACT

For the whole Plan, and for Parts 1, 2A, and 3:

D. F. Stevens, Head
Office of ITR Planning
Building 50B - Room 2239
Lawrence Berkeley Laboratory
Berkeley, California 94720
Telephone (510) 486-7344
FTS 451-7344

For Part 4, Telecommunications Plan:

Robert L. Fink, Head
Communications and Networking Resources Department
Building 50B - Room 2258B
Lawrence Berkeley Laboratory
Berkeley, California 94720
Telephone (510) 486-5692
FTS 451-5692

For Part 5, Printing and Publishing:

H. Louise Millard, Head
Technical Information Department
Building 50F
Lawrence Berkeley Laboratory
Berkeley, California 94720
Telephone (510) 486-5547
FTS 451-5547

SECTION G. SPECIAL AREAS OF INTEREST

G1. LBL GOSIP Transition Plan

Introduction

LBL operates a Laboratory-wide Local Area Network (LBLnet) that provides internal and external network services for all computer, workstation and personal computer systems at LBL. The management, administration, planning, development and operation of LBLnet is accomplished in the Communications and Network Resources Department (CNR) of the Information and Computing Sciences Division (ICSD). CNR has the responsibility to guide the Laboratory in becoming GOSIP compliant, has developed the LBL GOSIP Transition Plan, and is responsible for its implementation.

The GOSIP Acquisition Applicability Authority at LBL is the Office of ITR Planning (ITRP), also in ICSD. Since ITRP also has DOE Order 1360.1 computer acquisition compliance responsibility, it is the most appropriate place to oversee GOSIP applicability at acquisition time. LBL's GOSIP acquisition applicability determination procedures have been developed by ITRP in consultation with CNR.

LBL's GOSIP Transition Plan is based on the underlying assumption that the eventual conversion to OSI (i.e., GOSIP) protocols is inevitable. However, LBL also believes that a long period of "graceful coexistence" between OSI and protocols currently in use is necessary. This will guarantee minimal disruption to ongoing LBL research programs, and thus ensure lowest overall cost to DOE. LBL fully supports the DOE developed GOSIP transition guidelines and will utilize them for its own transition plan.

Overview of the LBL OSI Project

LBL has defined a formal project, headed by a full-time staff scientist, to provide transition to GOSIP and long term support for OSI. The initial elements of the LBL OSI Project include:

- Development and support of GOSIP network services on LBLnet
- Participation in the DECNET Phase V Field Test

- Participation in the DECNET X.400 and X.500 Field Test
- Participation in Internet MHS and MHS-to-SMTP Gateway efforts
- Development and support of GOSIP Directory Services on LBLnet

GOSIP protocols can be divided into two classes: application services and end-to-end services. Application services are concerned with information transfer, such as files (using FTAM) and mail (using MHS/X.400). End-to-end services are concerned with data transfer for the application services. End-to-end services currently utilize TP4 transport, CLNP network, LLC data link and IEEE 802.3 physical layer protocols.

GOSIP Application Services

The first-level goal of GOSIP planning for DOE contractors is to provide ways to support GOSIP application services internally and with other DOE sites. GOSIP Version 1 specifies MHS (mail) and FTAM (file) transfer services. To provide these services most effectively for LBL, an application gateway model will be used, so that existing mail and file transfer utilities need only learn how to communicate with the appropriate GOSIP Gateway .

LBL will re-evaluate its application gateway model for continued relevance in support of new GOSIP application services as new versions of GOSIP are approved and released.

As vendors begin to support GOSIP application and end-to-end services directly on their systems, the GOSIP application gateways will play a smaller rôle. However, it is anticipated that the continued release of advanced application services in future versions of GOSIP will always require a first-level implementation effort using the application gateway model.

GOSIP End-to-End Services

The eventual goal for DOE is that all systems and networks support GOSIP application and end-to-end services directly. GOSIP Version 1 specifies end-to-end services using TP4, CLNP, and several physical layer protocols, e.g., IEEE 802.3. LBL provides transport for CLNP packets between systems on LBLnet, and to external systems via ESnet.

General support for OSI transport on LBLnet was accomplished in FY 1992 using LBLnet's cisco routers. This will provide the ability for computer, workstation, and personal computer systems to support GOSIP protocols directly as they become available, thus not having to rely on the GOSIP Gateways.

It is also expected that "graceful coexistence" in the form of parallel stacks of GOSIP and older protocol suites will continue to be necessary at least through FY 2000.

GOSIP Testing

GOSIP testing is taking place at several levels. On a DOE/ER-wide level, there is an organized Field Test of DECNET, which includes LBL, LLNL, SLAC and FNAL. On a local level, there will be system specific testing of new services as they become available on LBLnet. On an Internet-wide level, there are efforts to provide testing of MHS mail services and MHS-to-SMTP (Internet mail) gateway services.

LBL participates actively at all of these levels. As one example, LBL is DOE's lead field test site for the Digital Equipment X.400 and X.500 products.

GOSIP Directory Services

GOSIP Directory Services are anticipated for the GOSIP Version 3 release of August 1993. These Directory Services are based on the CCITT X.500 protocols, and form the basis of naming for all GOSIP application services. Even though there is a possibility that Directory Services may not be finalized sufficiently for release as anticipated, LBL has been actively pursuing early implementations of X.500 and will be fully prepared for their eventual deployment and use.

It is expected that X.500 services will not only be the basis of interconnection of DOE sites, but also a fundamental service internal to LBL. X.500 will provide *white pages* facilities (lookup by person) as well as traditional *yellow pages* facilities (lookup by type of service). In addition, it is expected that many forms of object registry will be done via X.500. Thus LBL will have an extensive and thorough commitment to X.500. A laboratory-wide X.500 white pages service is being deployed during FY92.

GOSIP Applicability Determination

GOSIP applicability determination will be a continued process of review of the acquisition process for computer system and network equipment. At present, the DOE GOSIP implementation requires that contractors provide MHS and FTAM services for communication to other DOE sites. LBL's GOSIP Gateway Project will provide this service initially, while the vendor community evolves to the point of being able to supply these services directly on their systems.

LBL's GOSIP applicability determination has been integrated into the LBL computer and network equipment acquisition review process within the ICSD Office of ITR Planning (see GOSIP Acquisition Authority below). Fundamental to this review is identifying any system that intends to transfer mail and/or files to another site, and determining if the system has the ability to work through the LBL GOSIP Gateway. If it does, GOSIP will be deemed not applicable to this system inasmuch as the GOSIP requirements are met for all of LBLnet by the LBL GOSIP Gateway.

If a computer or network system will not use LBLnet for its external access, or doesn't have the ability to transfer mail and/or files via the LBL GOSIP Gateway, GOSIP will be deemed applicable to this system. In these cases, which are expected to be very few in number, ICSD CNR staff will work with the user/buyer of the system to ensure that GOSIP requirements for purchasing are met.

GOSIP Authorities

Acquisition and Protection Authority: GOSIP Acquisition Applicability Authority resides in the ICSD Office of ITR Planning (ITRP). David F. Stevens (LBL ext. 7344, LBL MS 50B-2239, dfstevens@lbl.gov) is the responsible GOSIP Acquisition Applicability Authority within ITRP. The LBL Purchasing Agent, Mr. Tom Beales, is the delegated responsible person for purchasing activity at the Laboratory. He relies on ITRP for the GOSIP Applicability signoff for LBL purchasing purposes. ITRP also holds the responsibility for computer security at LBL. Therefore, Mr. Stevens is also the responsible GOSIP Protection Authority.

Addressing and Registration Authority: The responsibility for GOSIP implementation resides within the Communications and Network Resources

Department (CNR) in the Information and Computing Sciences Division (ICSD). Russell Wright (LBL ext. 6965, LBL MS 50B-2258, rwwright@lbl.gov) is the GOSIP Addressing and Registration Authority within CNR.

GOSIP Timeframe

FY 1991 Development of GOSIP Gateway for MHS and FTAM services
Testing of DECNET Phase V for OSI End-to-End services

FY 1992 Support of GOSIP Gateway for MHS and FTAM services
GOSIP Network (CLNP) Services available on LBLnet routers
GOSIP Network (CLNP) Services available on ESnet
GOSIP Directory Services available on LBLnet
Further Development of GOSIP Gateway services for GOSIP V2
Some systems acquired capable of direct GOSIP services

FY 1993 Further Development of GOSIP Directory Service for LBLnet
Further Development of GOSIP Gateway services for GOSIP V3
More systems acquired capable of direct GOSIP services

FY 1994 Support of GOSIP Directory Service for LBLnet
Further Development of GOSIP Gateway services for GOSIP V4
Many systems acquired capable of direct GOSIP services

FY 1995 Further Development of GOSIP Gateway services for GOSIP V5
Most systems acquired capable of direct GOSIP services

FY 2001 Expectation that most non-GOSIP protocol stacks will be no longer in use

Schedule 1-1

E-Mail Resources

1. **Site Name:** Lawrence Berkeley Laboratory

2. **E-Mail System Used:** VMS mail; software tools; various unix; Quickmail; TechMail

3. **System Location:** LOCAL and OTHER (other sites unknown)

4. **System Service Area:** INTERNATIONAL

5. **Number of Subscribers:** About 3,500 or none, depending on definition

6. **System to System Interconnection:** Internet, ESnet, DECNET, BITNET

7. **Future Plans for E-Mail Upgrade or Acquisition:** Continual upgrade is expected, but there are no specific plans

8-11. System Coordinator:

William Jaquith
FTS 451-4388 (510-486-4388)
Lawrence Berkeley Laboratory
MS 50F
Berkeley, CA 94720

PART 2A: SOFTWARE PLAN FOR DOE CONTRACTORS

SECTION A. SOFTWARE MANAGEMENT PLANS AND STRATEGIES

The LBL Software Management Policy (LSMP) has been defined, but implementation is not complete. The basic elements of the policy are:

- existing (DOE, commercial, licensed, or public-domain) software should be used in preference to developing software in-house
- the following exemptions and thresholds apply:
  - -- embedded software and scientific applications undergoing continuous change are exempt
  - -- software with an in-house development cost of three programmer-years or less is exempt
  - -- commercial software costing less than $250K is exempt
- certain classes of sensitive software are specifically non-exempt (patient treatment, large financial risk), and must undergo both a design review and a post-implementation review
- annual inventory of software subject to the LSMP (the first such inventory is scheduled for the Spring of 1992)
- provision for triennial review of the policy itself

No specific software management methodology is required by the policy, and no formal commercial "methodologies" are currently in use, although some groups employ locally-defined standard development and maintenance control procedures.

Current software management style at LBL for the four defined types of software is as follows:

Administrative: Application development for the mainframe system is accomplished by a central group, utilizing commercial application

packages and high-level languages to the maximum extent possible. Applications on desktop systems are developed by the end-users.

System software: Standard operating systems are used, with minor local modifications, primarily for accounting and security purposes.

Scientific/Engineering: Scientific and engineering applications are developed by the end users, making significant use of high-level languages and the sharing of code with other groups.

Manufacturing: LBL makes some use of commercial CAD and CAE software products, but has no manufacturing applications.

LBL's experience is that the quality of software depends more upon the quality of the developers than upon the methods used. Accordingly, it is difficult and misleading to ascribe any benefit whatsoever to a software management program.

SECTION B. SOFTWARE INITIATIVES AND RESOURCE REQUIREMENTS

The scope and magnitude of LBL's software activities, by type:

Administrative/business-oriented

LBL performs application development for a small IBM mainframe, using third-and fourth-generation languages. Both batch and on-line applications are involved. A small amount of work is also done on the central VAX/VMS system. The applications involved are conventional administrative and business applications. Approximately 12 staff are involved. Future plans call for the development of applications using Unix-based RISC file servers that will be integrated through LBLnet with other facilities and workstations throughout the Laboratory.

System

System and application installation and maintenance are performed for IBM MVS, DEC VMS, and Unix systems on several platforms, including Sun, HP, DEC, Stardent, and Silicon Graphics. Because of the distributed nature of these systems, actual staff involvement is difficult to estimate. However, about 7 staff have these activities as their primary responsibilities.

Scientific/engineering

Most of the scientists, engineers, and technicians at LBL (about 1000 staff) do some level of software design or application programming, primarily in Fortran, but also in C, C++, MACSYMA, and other high-level languages. For most of these people, this is a small part of their duties. We estimate that about 15 staff have such programming as a primary responsibility.

Manufacturing-oriented

LBL's involvement in manufacturing-oriented software (CAD, CAE, etc.) is only on a user basis.

There are five areas of software expertise that may be of interest to other elements of the DOE community: real-time accelerator control, high-performance network research, advanced imaging techniques for research, software engineering, and multilevel mass storage.

- accelerator control: LBL has published a number of papers and technical reports defining the existing control system for the Bevalac and the proposed system for the Advanced Light Source.
- network research: This work is described in Part 1, Section C of this Plan.
- advanced imaging: LBL has developed a center of expertise in this area, with an emphasis on applications in physics, the life sciences, and the earth sciences.
- software engineering: LBL is developing an Integrated Scientific Toolkit to provide a software design environment for the SSC Magnet Test Laboratory and the SSCL Accelerator Control System.
- multilevel mass storage: LBL now has in beta-test a hierarchical mass storage system based on the IEEE model.

LBL performs no software activities in direct support of Headquarters or any Field Office.

SECTION C. SOFTWARE REPORTING REQUIREMENT

LBL has no software or software development projects meeting the reporting criteria.

ADPE REQUIREMENTS (RCU's)

SITE Lawrence Berkeley Laboratory -- LBL

SCHEDULE 3A-1

B & RC CODE	PROGRAM	CATEGORY	PAST FY 1991	CURRENT FY 1992	BUDGET FY 1993	PLAN FY 1994	OUT - YEARS FY 1995	FY 1996	FY 1997	FY 1998
AM	Geothermal	P	45.08	60.33	70.61	63.57	69.16	74.81	83.51	93.22
		R	0.01	0.01	0.01	0.01	0.01	0.01	0.01	0.01
AT	Magnetic Fusion	P	0.95	1.49	3.47	5.35	9.24	13.97	19.20	26.38
		R	0.01	0.02	0.02	0.02	0.02	0.02	0.02	0.02
DB	Civilian Waste Management	P	112.81	80.15	196.11	211.48	229.73	248.15	276.67	308.46
		R	0.02							
EC	Buildings & Community Systems	P	31.88	37.04	41.00	45.93	52.26	59.46	67.53	76.69
		R								
KA	High-Energy Physics	P	70.93	97.34	123.21	136.72	154.14	173.90	195.76	220.38
		Q	1.60	1.70	1.70	1.70	1.70	1.80	1.80	1.80
		R	0.01	0.14	0.16	0.17	0.19	0.21	0.23	0.25
KB	Nuclear Physics	P	57.87	69.17	81.82	101.58	111.70	126.27	147.17	171.54
		R	0.01	0.01	0.01	0.01	0.01	0.01	0.01	0.01
KC	Basic Energy Sciences	P	193.20	258.93	324.76	413.73	490.16	574.71	676.27	795.78
		R	0.39	0.67	0.74	0.82	0.90	0.99	1.09	1.19
KP	Biological & Environmental	P	23.09	26.36	33.92	39.55	52.61	63.70	75.75	90.08
	Research	R	0.13	0.21	0.23	0.25	0.27	0.30	0.33	0.36
	Other Programs	P	2.99	3.52	5.62	8.09	13.24	20.37	28.14	38.87
	(AA, AK, AL, AZ, EB, EE,	Q								
	EG, EX, KT, NT, PE, WB)	R								
	Reimbursables -- DOE	P	2.21	3.09	4.52	6.54	10.76	15.97	21.84	29.85
		R	0.01							
	Reimbursables -- NRC Internal	P	0.01	0.02	0.02	0.03	0.05	0.08	0.11	0.15
	Reimbursables -- DOD Internal	P	0.39	2.02	2.54	3.95	6.89	10.46	14.40	19.83
	Reimbursables -- DOD External									
	Reimbursables -- Other Internal	P	5.71	6.25	8.12	12.54	22.45	36.56	51.06	71.32
	Reimbursables -- Other External	P	1.12	1.12	2.00	2.00	2.00	2.00	2.00	2.00
		R								
	DOE Program Requirements	P	538.81	634.32	880.53	1026.01	1182.24	1355.33	1569.99	1821.39
		Q	1.60	1.70	1.70	1.70	1.70	1.80	1.80	1.80
		R	0.59	1.06	1.16	1.28	1.40	1.54	1.69	1.85
	Reimbursables	P	9.45	12.50	17.19	25.06	42.15	65.07	89.41	123.15
		R	0.01	0.00	0.00	0.00	0.00	0.00	0.00	0.00
	Total requirements	**Category P**	**548.25**	**646.82**	**897.72**	**1051.07**	**1224.39**	**1420.40**	**1659.40**	**1944.54**
		Category Q	**1.60**	**1.70**	**1.70**	**1.70**	**1.70**	**1.80**	**1.80**	**1.80**
		Category R	**0.60**	**1.06**	**1.16**	**1.28**	**1.40**	**1.54**	**1.69**	**1.85**

Shaded cells indicate a change of >30% and >1.0 P from year to year or from last year's Plan.

PART 3: COMPUTING RESOURCES PLAN

SECTION A: REQUIREMENTS

A1. Explanation for increase/decrease in ADP requirements

General Note for Category R: Unless otherwise noted, changes in Category R requirements from last year's Plan to this Plan, and from year to year in this Plan, are the result of changes in allocation of Category R service on the OER supercomputing facilities at NERSC and SCRI.

General Note 1 for Category P: Unless otherwise noted, increases in Category P requirements from last year's Plan to this Plan, and from year to year in this Plan, result from the increased availability of powerful, low-cost Category P systems. Computing requirements at this Laboratory are often budget-limited rather than problem-limited, and we continue to expect similar increases as long as the improvement in technology will support them. Since the cost per P-unit is now well under $1,000 for many systems, and is continuing to decline, it is likely that even the large numbers indicated here for some programs are underestimates.

General Note 2 for Category P: The Data Processing Services Department (DPS) expects to take advantage of the technology improvement noted above to acquire significant additional Unix computing capacity throughout the period covered by this plan. Because we must distribute overhead usage to programs, the increased usage by DPS has been distributed on the basis of expected funding for the programs. This has resulted in unusually large increases for some of the less-computing-intensive programs.

AM Geothermal & DB Civilian Waste Management

Category R requirements have dropped to 0 in FY 1992 and beyond for AM and DB because the Center for Computational Seismology replaced its (Category R) Convex system with a (Category P) Solbourne system in mid-FY 1991.

AT Magnetic Fusion

See the General Notes for Category P and Category R, above.

KA High-Energy Physics, KB Nuclear Physics, & KC Basic Energy Sciences

See the General Note for Category R.

KP Biological and Environmental Research

See the General Note for Category R.

Other Programs, Reimbursable DOE Internal, & Reimbursable Other Internal

See the General Notes for Category P.

ADP CAPACITY (RCU's)

SITE Lawrence Berkeley Laboratory -- LBL

SCHEDULE 3B-1

UNIT/ SYSTEM OR MIE NUMBER	ADP SYSTEM		PAST	CURRENT	BUDGET	PLAN	OUT - YEARS			
			FY 1991	FY 1992	FY 1993	FY 1994	FY 1995	FY 1996	FY 1997	FY 1998
1701-CV 1701-CU 1701-CZ	Central Facility *DEC VAXCluster +* *Suns (various sizes), and* Visualization Systems	Practical	105.0P	150.0P	200.0P	250.0P	300.0P	380.0P	440.0P	500.0P
1701-AD	Administrative Data Processing *Small IBM systems (MVS)*	Practical	8.1P	17.6P	30.3P	57.0P	110.0P	180.0P	260.0P	350.0P
1701-ES	Center for Computational Seismology *Miscellaneous systems*	Practical	224.0P	240.0P	390.0P	420.0P	455.0P	490.0P	545.0P	600.0P
	Convex C-1 XP (0.12R)	Theoretical	0.06R							
		Practical	0.06R							
1701-3L	Biology & Biophysics Support *VMS & Silicon Graphics systems of various sizes*	Practical	80.0P	96.0P	115.2P	138.2P	165.9P	199.1P	238.9P	286.7P
1701-4E 1701-4G	Biomedical Research *VMS and unix systems of various sizes*	Practical	5.0P	6.0P	7.0P	8.0P	9.0P	10.0P	11.0P	12.0P
1701-1J	Energy & Environment Division *VMS and unix systems of various sizes*	Practical	30.0P	35.0P	38.5P	42.4P	46.6P	51.2P	56.4P	62.0P
1701-2E 1701-2F 1701-2G	Nuclear Science Division *DEC VAX systems of various sizes*	Practical	44.4P	62.8P	74.0P	98.1P	100.0P	110.0P	125.0P	140.0P
1701-EM 1701-NM	CSD/MSD *VMS and unix systems of various sizes*	Practical	45.0P	60.0P	80.0P	120.0P	146.0P	172.0P	200.0P	220.0P
	Physics Division *VMS and unix systems of various sizes*	Practical	61.7P	86.0P	110.6P	121.6P	133.8P	147.2P	161.9P	178.1P
	Other Distributed Systems *VMS and unix systems of various sizes*	Practical	20.0P	40.0P	60.0P	90.0P	120.0P	150.0P	190.0P	230.0P
	Total Capacity									
	Category P	Practical	623.2P	793.4P	1105.6P	1345.3P	1586.3P	1889.5P	2228.1P	2578.8P
	Category R	Theoretical	0.06R	0.00R	0.00R	0.00R	0.00R	0.00R	0.00R	0.00R
		Practical	0.06R	0.00R	0.00R	0.00R	0.00R	0.00R	0.00R	0.00R

SECTION B. COMPUTING RESOURCES

B1. Capacity Projections

Note that because of the price/performance of currently available systems and workstations (less than $1,000 per P unit for multi-user systems, and less than $500 per P unit for workstations), LBL no longer distinguishes between Theoretical and Practical capacity for Category P systems. Increases in capacity over the period of the Plan generally represent a combination of upgrade and replacement by more cost-effective systems.

B3. Installed Computing Systems

Most of the systems described here are attached to LBLnet. An overview diagram of the network is shown in Part 4, Section B (Exhibit LBL4-B1).

1. Central Facility

At the end of FY 1991, the primary computing engine in the central computing facility was a DEC VAX-6510 cluster, consisting of three 6510 CPU's sharing nearly 35 gigabytes of disk storage and three 1600/6250 CPI tape drives. The configuration includes redundant paths between CPU's and controllers, and between controllers and drives. In addition to the principal machines, the Central Facility currently also includes several Sun 3/ and Sun 4/ Unix systems. Primary use is scientific data processing.

2. Administrative Data Processing System

Two IBM 32-Mbyte systems, model 4381-R13, sharing 40 gigabytes of disk storage and four tape drives. The system includes gateways to LBLnet and to the central VAX/VMS facility. The Administrative facility has also begun a program of installing distributed file servers and workstations to simplify end-user access and processing. Primary use is administrative data processing.

3. Distributed Facilities

LBL's distributed computing facilities consist of various combinations of minicomputers, general-purpose workstations, and special-purpose processors. (Examples include equipment wholly or partially dedicated to data-acquisition, data analysis, file management, graphics, and image processing.) The configurations are generally quite dynamic, changing rapidly to reflect both the research needs of the scientists served and the continuing rapid advance in workstation technology. More details on some of these systems can be found in Section B4.

For all of these systems, the primary use is scientific data processing.

PERSONAL COMPUTER/MICROCOMPUTER DATA

SITE Lawrence Berkeley Laboratory SCHEDULE 3B-3.1

PC Cost Summary			
	Cost as of 9/30/91	Estimate FY 1992	Estimate FY 1993
Hardware			
increment	--	1,500K	1,500K
*total**	10,000K	10,500K	11,000K
Software			
increment	--	250K	250K
*total**	1,200K	1,250K	1,300K

* *Increment* includes replacements as well as additional hardware and software; therefore totals are not additive.

INSTALLED PERSONAL COMPUTERS AND MICROCOMPUTERS
as of 9/30/91

SITE Lawrence Berkeley Laboratory SCHEDULE 3B-3.2

	Quantity
Currently installed, all models:	3,250

B4. Computing Environment

The overall computing environment at LBL is highly distributed, but with a significant centrally-operated service facility. All multi-user systems are networked together, and access is provided to any system from any terminal by the Integrated Communications System. Divisional facilities range in power from individual personal computers up to systems with significant capacity; the Central Facility offers mid-range CPU's, central mass storage facilities, and a wider range of commercial software, especially in the graphics area, than is available on Divisional systems. For those programs supported by OER, requirements for supercomputing are met by providing access to the Energy Research facilities at NERSC and SCRI. For those programs not supported by OER, lack of access to very-large-scale computing remains a problem.

1. The Central Facility

The central computing facility provides VAX VMS and Unix services, together with various utility services such as an E-mail gateway, a soon-to-be-operational mass storage system based upon advanced tape media, color graphics, and sophisticated imaging facilities. The systems supporting these systems are upgraded more-or-less continuously, in accordance with LBL's site strategy to provide modern, cost-effective technology.

The current VMS configuration consists of three 6510 processors. The workload is primarily scientific computation, and consists of about 1200 interactive sessions and 600 (interactively submitted) batch jobs daily. Although some jobs are quite small, others require more than an hour of CPU time; jobs in the largest 10% by resource usage account for more than half the total work, while those in the smallest 50% by resource usage account for less than 10% of the total work. User files are stored in the VMS hierarchical system with a capacity of 35 gigabytes. User-controlled storage of scientific data has nearly completed a migration from 9-track magnetic tape to 8mm helical-scan tapes. These tapes can be mounted by users or operators. The typical volume of tape mounts is 6 per day, of which 5 are for High-Energy Physics data reduction.

The Unix configuration consists of three Sun systems. While Unix usage in terms of CPU hours is only about 10% of VMS usage, its computational equivalent is more than 25% that of the VMS systems, because of the more

powerful processers involved. Approximately 25% of this resource usage is currently used for scientific computation and 75% for scientific text processing, although we expect the computational usage to increase significantly over the next several years.

Interactive access is currently provided via data switching facilities that allow a user either to select a specific computer, or to have the system automatically select the least active system. In either case, the access path is a 9600-baud dedicated line. Several color graphics terminals are also available to users at the Central Facility, as is a four-processor Stardent Titan III imaging system.

Printed output for both text and graphics is provided at the Central Facility by a 24-page-per-minute laser printer. An increasing amount of printed output is being provided by more than 200 8-page-per-minute laser printers that are located in other buildings near the offices of the computer users. Users may also obtain near-typeset-quality output on either of two 600-dpi laser printers.

Applications programming is done on a completely open-shop basis.

Maintenance of the computers and the major storage components is by vendor service engineers; Laboratory personnel maintain most of the communications interface equipment and the minicomputers.

Performance Measurement

Performance information is obtained from the use of a vendor-developed monitoring tool, the System Performance Monitor (SPM), and is also extracted from accounting information. A continuing activity provides basic reporting of usage details by device. This usage reporting provides the basis for measurement of growth and change in computing demand. Measurements of parameters characterizing specific system components have been used to optimize performance of these sub-systems as the need has arisen.

2. Administrative Data Processing Systems

The IBM-based administrative computer center became operational in 1984. Prior to that time, all central administrative applications were shared with LLNL. The center has grown as applications have been redesigned and moved from LLNL or accommodated through the use of commercial software. The

conversion of the central applications is nearly complete; the only remaining major system yet to be transferred is the Accounts Payable System, which will become operational at LBL in about one year, at which time LBL will be fully self-sufficient.

The stores inventory-management and purchasing functions are performed at Berkeley in support of both LBL and LLNL. Other stores functions, including the preparation of the stores catalog, financial accounting for stores transactions, and purchasing of LLNL specific stock items, are done at LLNL on a shared cooperative basis.

Administrative computer operations are supported on a multi-platform architecture that includes the use of IBM mainframes, the central VAX cluster, Unix-based RISC file servers, and user PC-based workstations, all of which are attached to LBLnet. A relational database management system was selected and acquired for the Unix environment to supplement the limited database facilities of the fourth-generation language now in use.

For the purpose of maintaining data security, most central data files are maintained on the IBM mainframe, but copies of many of these files are distributed to other networked machines in a seamless manner so that the information is made available to the larger Laboratory community for their immediate use. The availability of these data files, along with a menu-driven report generation capability has made a great deal of information available to users in flexible formats without the need for them to write computer programs.

As the conversion process nears completion, more emphasis is being placed on the development of integrated applications that will combine data formerly maintained in separate files. This is expected to make the data much more accessible, and hence more useful to end users. The purchasing and receiving functions will be integrated with the Accounts Payable system to provide reliable information on the status of material received and outstanding obligations. These improved data will become the building blocks of an improved Task Management system that will combine all types of transactions into a common system for the management of individual tasks and for project management.

The Administrative Data Processing System is operated two shifts a day, five days a week, and one shift on Sunday, by LBL operators. The system is in operation 24 hours a day, 7 days a week, but is unattended during the third shift

and for most of the weekend operating hours. Operator staffing of the central computer room is minimal, with the bulk of the attention being directed to scheduling of production applications, production control, table maintainance, file backups, and report distribution.

Primary hardware maintenance is performed by a third-party vendor, Bell Atlantic Business Systems, Inc., with some peripheral equipment serviced by the LBL Computer Systems Engineering Department (CSE), Ketterman's, Inc., DataCo DeRex Corporation, and IBM. Software maintainance of the IBM/MVS operating system is performed by PMA, Inc.

3. Distributed Facilities

Until recently, the dominant form of distributed computing at LBL was a traditional mainframe/terminal configuration (albeit, generally with a small mainframe). This style is rapidly being supplanted today by workstation clusters, either "standalone" (i.e., not part of a local subnet, but connected only to the Laboratory-wide LBLnet) or in a local subnet supported by special-purpose servers (such as for file management, image processing, or high-speed computation). It is also increasingly the case that distributed facilities are moving from a homogeneous, DEC VMS architecture to a heterogeneous, multi-manufacturer, Unix-based architecture. This move is largely technology-driven, because the most rapid advances in computational economy ("bang for the buck") at the moment are occurring in the Unix workstation area. As a result, we expect to see order-of-magnitude increases in the installed capacity of several of these facilities over the next few years.

Center for Computational Seismology (CCS)

CCS includes two Solbourne systems (a 902 with 128 Mbytes of memory and 6 Gbytes of disk, and an 802 with 80 Mbytes of memory and 4 Gbytes of disk), three specialized seismic processing systems, streaming tape drives, plotters, and 10 Sun workstations. This system provides specialized processing for the modeling of geological processes. The Unix BSD 4.2 operating system is supplemented by the Sierra Geophysics Sierra Seis, Cognosis DISCO, and the 2-D AIMS processing system. The system is available 24 hours per day and is maintained by vendor personnel.

Apple Macintosh computers are used for document preparation, data, acquisition, and terminal emulation. Their AppleTalk network is connected to LBLnet via a Shiva gateway.

Biology and Biophysics Support System

Much of the research in LBL's Chemical Biodynamics Division (CBD) is directed toward determining the three-dimensional structure of large biological molecules. High-performance interactive computer graphics and commercial molecular-modeling software have become basic tools in this field. Within CBD, these tools are provided by a continuously evolving, heterogeneous, computing network. That network currently consists of a VMS local-area VAXcluster and an increasing population of UNIX-based systems. These machines are locally connected by Ethernet and access major wide-area networks using DECNET and TCP/IP protocols. File sharing between UNIX and VMS is facilitated by NFS.

The VAXcluster load host is a VAX 4000-300 with 32 megabytes of main memory and 4 gigabytes of disk. There are four VAXstation 3100 and four VAXstation II satellites.

Five Silicon Graphics corporation Iris workstations support the Structural Biology Project. One of these is a four-processor model 4D/440 that provides substantial computational power in addition to state-of-the-art interactive graphics capability. The Iris's operating system is a derivative of UNIX System V. They share a 5 gigabyte file system via NFS. The 4D/440 has 96 megabytes of main memory.

The aggregate computational power of the above mentioned systems is approximately 200 times that of a VAX 11/780. Those resources are routinely devoted to Fourier Transforms, energy-minimizations, and distance-geometry calculations on large data sets.

Apple Macintosh computers are used for document preparation, data acquisition and terminal emulation. Their AppleTalk network is connected to the local Ethernet via a Kinetics gateway.

Various experiments and spectrometers are connected to the network through minicomputer or microprocessor-based data acquisition systems. Examples of these are a flow cytometer, NMR and EPR spectrometers, and a

high-resolution optical scanner that is used to digitize X-ray crystallography diffraction pattern film.

The CBD X-ray crystallography group has been allocated 1527 CRU for FY92 on the Livermore MFE Crays. More time on machines of this class will be needed to extend current research.

Biomedical Research Systems

The Biomedical computer complex involves sixteen distinct systems used in data acquisition, control, reconstructive graphics display and analysis for patient treatment, radiotherapy studies, research medicine, and biophysics experiments.

Nine of the systems belong to the same DEC PDP-11 computer family (including four VAX-11/780's), have a common technical computer staff, and utilize common systems software. The other systems include 10 Sun's of various sizes and one IBM 6000.

Applications software consists mainly of a large number of interrelated programs for on-line control and data acquisition, and for patient treatment planning. Operating systems are RSX-11M/MPLUS for PDP-11 systems, VMS for the VAX-11/780's, and Unix for the Suns and the IBM 6000. Programming is done in Fortran, C, and MACRO assembly language.

Maintenance is by LBL personnel. The systems are available 24 hours per day, and are operated by 80 users.

Energy & Environment Division

Two Sun 4/ systems used for program development and documentation. The systems are operated by researchers and are available 24 hours a day. Maintenance is performed by the vendor on one system, and by LBL (CSE) on the other.

Nuclear Science Division Systems

These systems are used for data acquisition and general-purpose computing. With the retirement of several older multi-user systems last year, the division has adopted a computing model based on networked workstations.

This flexible approach allows individual computing resources to be directed to data acquisition or analysis applications as needs arise.

High Energy Research Workstations

With the retirement of the VAX-3500 file server, the VAXStation cluster serving the high energy research programs has been split into three separate, smaller VAXStation clusters. These workstation clusters serve the RNC group, EOS group, and the Moretto/Wozniak group. These systems are available 24 hours a day and are maintained by LBL personnel.

Theory Workstations

Six Sun SPARC stations are organized and managed as a work group serving the NSD Theory group. These systems are accessible to all group members and are available 24 hours a day.

88-Inch Cyclotron and Low Energy Systems

A VAX-3300 and five VAX-3200 systems provide support for Nuclear Science Division experimental efforts at the 88-inch Cyclotron. The 3300 is used for general purpose computing and analysis of experimental data. The VAX-3200 systems are used for both on-line and off-line data acquisition and analysis. Each is equipped with a minimum of 32 megabytes of internal memory and at least 600 megabytes of disk storage. They are interfaced to CAMAC instrumentation crates for data acquisition purposes. One of these systems is dedicated to the HERA detector system and is equipped with 48 megabytes of internal memory to facilitate data histogramming.

Two Sun SPARC stations have been installed for use on the Gammasphere detector project. These systems are primarily used for data acquisition system design and implementation. They will become part of the Gammasphere detector facility upon completion. All systems are maintained by LBL personnel and are available 24 hours a day.

CSD/MSD Systems

The Chemical Sciences Division and the Materials Sciences Division maintain a number of relatively independent systems, of which the principal is currently the Image Analysis System of the National Center for Electron

Microscopy (NCEM). The NCEM system is used for processing and simulation of electron microscope images. Its present configuration includes a Sun 3/260, a MicroVAX II, and a VAXStation II, with a total of 2.4 gigabytes of disk storage, and supported by several array processors and specialized image processing equipment. Hardware maintenance is performed by LBL personnel, and the system is available 24 hours a day.

Physics Division System

The Physics Division maintains approximately 33 DEC VMS-based VAXStations and MicroVAXes, plus 20 Unix-based workstations from several manufacturers. These systems have taken over much of the workload from the central VAX cluster. The work done on these systems includes code development for experimental projectrs, theoretical calculations, data reduction and analysis, and Monte Carlo simulations used in the design of experiments and detectors. Most of these systems are available 24 hours per day; hardware maintenance is performed by both LBL and vendor personnel.

Magnetic Fusion Energy System

The Test Stand III negative ion beamline uses a Micro PDP-11 and a Macintosh II for diagnostics. Beam profile and emittance are monitored by the PDP-11 while the Mac II is being integrated into the system to provide interactive control capability for the diagnostics and interactive retrieval, manipulation, and analysis of the experimental data. Commercial software is used where applicable, while the remainder of the required software is developed on the PDP-11 and a second Mac II. Maintenance is performed by LBL personnel and the computer systems are available 24 hours a day.

Bevalac Control System

The Bevatron and SuperHILAC (Bevalac) accelerator complex is controlled and monitored by three groups of computers, of which two consist of star networks of Modcomp minicomputers, and the third of Intel microprocessor boards. Hardware and software are planned, developed, operated and maintained as a coordinated system. Numerous additional single-board computers are embedded in various equipment and similarly maintained.

Workloads at each accelerator are primarily on-line data acquisition and interactive operator control, some interactive program development and analysis, and almost no batch work. Applications software primarily consists of interrelated programs for real-time control, data archiving, and interactive operator consoles. Operating systems are Modcomp MAX III and MAX IV, with programming done in Ratfor, Fortran, and assembly language, and RMX-86 with programming done in PL/M and assembly.

The system is linked for two-way data transfer to the Biomedical Research Control and Data Acquisition system and the HISS Data Acquisition System.

Maintenance is done by LBL personnel on a 24 hour per day basis. The systems are used by 20 accelerator operators and are available 24 hours per day.

Work is in progress to upgrade this system from the present triple-star configuration to a two-layer local area network with a bus topology. The upper layer will consist of Sun 3/60 or equivalent workstations running the Unix operating system and the V.I. Corp DataView graphics package. The lower layer will be composed of VME crates with 680x0 family (initially) single-board computers running the Wind River VxWorks kernel. The interconnection technique will be Remote Procedure Call on top of TCP/IP, using Ethernet (initially) at the lowest level. The primary programming language will be C.

A gradual cutover—more than three years—is underway, with three VME crates and nine workstations presently on line, exchanging data with the two Modcomp systems.

Other Real Time Systems

There are a number of other minicomputer systems devoted to on-line data acquisition, control, and analysis, and interactive computation supporting experimental research at LBL. A large portion of these are DEC PDP-11 and LSI-11 series utilizing RSX-11M and RT-11 operating systems and are programmed in Fortran and MACRO assembly language.

Systems used to support physics and nuclear science include a dozen DEC PDP-11's, and share a common set of applications software utilizing the MULTI data acquisition system. MULTI is a set of applications software used at a number of laboratories and universities. Others include Modcomp machines

under MAX III and MAX IV operating systems, and Hewlett Packard 1000, 9845 and 85 series machines using the HP operating systems, with programming primarily in Fortran, Extended Basic, and assembly language. Hardware and software maintenance is performed almost entirely by LBL personnel.

Technical Support System

The Computer Systems Engineering Department maintains a variety of DEC and Sun systems as support for all other such systems.

SITE SOFTWARE PROFILE
(as of 9/30/91)

SITE Lawrence Berkeley Laboratory -- LBL SCHEDULE 3B-4

	Administrative/ Business/ Manufacturing	Scientific/ Engineering	Both
Operating Systems	MVS/SP1 SUNOS 4.1	SUNOS 3.0, 4.1 VMS 4.x, 5.x RSX ULTRIX BSD Unix Unix V Solbourne Unix 4.1 HP-Ux 8.0	
Database Mgmt Systems		Datatrieve BASIS+ ORACLE RDB (DEC) HP Allbase 2.0	FOCUS Informix
Data dictionaries, directories, encyclopedias		CDD	
Programmer productivity aids, CASE tools	Saber C Software Through Pictures Frame Maker	Mathematica CMS MMS SCA PCA FLINT Softbench (HP)	
Computer security enhancement tools	TopSecret	VMS security	

ADP SYSTEM RESOURCE SHARING (RCU's AND COSTS)
(Dollars in Thousands)

SCHEDULE 3C-1
Page 1 of 1

SITE Lawrence Berkeley Laboratory -- LBL

POINT OF CONTACT: E. R. Beals
FTS 451-5351

PROGRAM B&RC CODE	IDENTIFICATION OF SHARING PARTNER/ NATURE OF SERVICE/ADP SYSTEM	PAST FY 1991	CURRENT FY 1992	BUDGET FY 1993	PLAN FY 1994
	Resource Sharing Requirements				
(All LBL Programs)	LLNL—General administrative computing	0.1P (65)			
	Resource Sharing Commitments *None*				
	Resource Sharing Availability *None*				

MAJOR PLANNED ACQUISITIONS/LEASE CONTINUATIONS

SCHEDULE 3E-I

SITE: Lawrence Berkeley Laboratory -- LBL MIE NO. LBL-85-3 LAST MIE NO. _____

MIE NAME: Scientific Computing System

PROGRAM B&RC CODE KB (1) PROGRAM NAME: Nuclear Physics

MIE DESCRIPTION: Principal LBL on-site scientific computing system

ACQUISITION

FUNDING PROFILE ($000)

	CURRENT	BUDGET	PLAN	OUT-YEARS			
	FY 1992	FY 1993	FY 1994	FY 1995	FY 1996	FY 1997	FY 1998
CAPITAL							
OPERATING	217	170	61	0	0	0	0
CONSTRUCTION* (PLANT)							

NON-ACQUISITION (FOR ITEMS ACQUIRED IN FY 91 AND BEYOND)

MAINTENANCE							

INVOLVES FACILITY CHANGES WITH BUDGETARY IMPACT ___ Yes x No

INSTALLATION DATE (MO/YR) June, 1985

MANAGEMENT CLASSIFICATION: x GENERAL ___ SPECIAL ___ RESEARCH

INITIAL PURCHASE EQUIVALENT COST: $3,063K (ALL LEASED ITEMS)

ACQUISITION STRATEGY:

___ PURCHASE ___ LEASE FOR _____ YEARS

___ LEASE WITH OPTION TO PURCHASE; EXERCISE PURCHASE OPTION (MO/YR) _____

x LEASE TO OWNERSHIP; PAYMENTS TO BE COMPLETED FY 1994

___ OTHER (EXPLAIN)

PROCUREMENT STRATEGY: (FOR ITEMS NOT YET ACQUIRED)

___ FULLY COMPETITIVE ___ SOLE SOURCE (EXPLAIN)

___ LIMITED COMPETITION (EXPLAIN)

EXPLANATION:

MILESTONES: (FOR ITEMS TO BE ACQUIRED IN FY92 THROUGH FY94)

IMPLEMENTATION PLAN _____

SOLICITATION RELEASE _____

CONTRACT AWARD _____

(JUSTIFICATION MUST BE APPENDED TO THIS SCHEDULE. JUSTIFICATIONS NOT NORMALLY REQUIRED FOR CURRENT AND BUDGET YEAR ITEMS -- SEE SECTION E1.)

* IDENTIFY CONSTRUCTION PROJECT: NA

(1) Costs will be distributed to all programs based on usage.

MAJOR COMPUTER ACQUISITIONS AND OTHER ADP CAPITAL REQUIREMENTS FOR GENERAL MANAGEMENT COMPUTERS

(Dollars in Thousands)

SITE: Lawrence Berkeley Laboratory -- LBL

SCHEDULE 3H-1

	FY 1991	FY 1992	FY 1993	FY 1994	FY 1995	FY 1996	FY 1997	FY 1998
I. General Management Computers -- capital								
A. Major ADPE Items	0	0	0	0	xxx	xxx	xxx	xxx
B. Other ADPE	1716	2710	2020	2070	xxx	xxx	xxx	xxx
C. Software	0	0	0	0	xxx	xxx	xxx	xxx
D. Site Preparation	0	0	0	0	xxx	xxx	xxx	xxx
Total	**1716**	**2710**	**2020**	**2070**	**2130**	**2008**	**3055**	**2095**
Programmatic Distribution of Category I Capital								
AM	25	20	10	0	0	0	0	0
AT	0	0	0	0	0	0	0	0
DB	20	30	30	40	50	50	50	50
EC	35	10	10	10	10	10	10	10
KA	310	1200	500	300	330	363	1400	400
KB	200	200	200	250	250	275	275	300
KB(GPE)	676	790	750	750	750	760	760	760
KC	270	270	280	490	490	290	290	290
KP	180	190	190	200	210	220	230	235
Other Programs	0	0	50	30	40	40	40	50
Reimb.	0	0	0	0	0	0	0	0
Total	**1716**	**2710**	**2020**	**2070**	**2130**	**2008**	**3055**	**2095**

ADP OPERATING COSTS ASSOCIATED WITH GENERAL MANAGEMENT COMPUTERS

(Dollars in Thousands -- *totals may not agree due to rounding errors*)

SITE: Lawrence Berkeley Laboratory -- LBL

SCHEDULE 3H-2

	FY 1991	FY 1992	FY 1993	FY 1994	FY 1995	FY 1996	FY 1997	FY 1998
A: In-house Personnel								
1. Software	4266	4705	5020	5026				
2. ADPE Operations	1356	1429	1540	1541				
3. ADPE Maintenance	700	742	721	765				
4. ADP Studies/Other	310	323	343	365				
5. S/w Studies/Other	101	94	115	137				
Subtotal	6733	7293	7739	7833				
B: Other In-house								
1. ADPE Purchases	762	554	588	620				
2. Major ADPE Leases	323	217	87					
3. Other ADPE Leases	189	137	284	376				
4. Space								
5. Supplies & Other	1504	1393	1463	1515				
6. Software Purchases	297	268	280	295				
7. Lease of Software	215	258	271	284				
Subtotal	3290	2827	2973	3090				
C: Commercial Services								
1. ADPE Time		1	1	1				
2. ADPE Maintenance	424	454	441	428				
3. ADPE Operations	4	4	4	4				
4. Sw Dev/Maint	448	382	405	354				
5. ADP Studies/Other	13	3	3	3				
6. S/w Studies/Other								
Subtotal	889	844	854	790				
D: Non-Comm. Services								
1. Other DOE Sites	235	268	130	50				
2. Other EB Agencies	6	6	6	6				
3. Other								
Subtotal	241	274	136	56				
TOTAL	**11154**	**11238**	**11701**	**11769**	**12000**	**12200**	**12500**	**12800**

ADP OPERATING COSTS ASSOCIATED WITH GENERAL MANAGEMENT COMPUTERS

(Dollars in Thousands -- *totals may not agree due to rounding errors*)

SITE: Lawrence Berkeley Laboratory -- LBL

SCHEDULE 3H-2
Page 2 of 2

	FY 1991	FY 1992	FY 1993	FY 1994	FY 1995	FY 1996	FY 1997	FY 1998
II. Work Years	N/A	N/A	N/A	N/A				
III. Distribution of Funded Costs by Program (Total must equal Part I total)								
AM	76	79	96	91	93	94	97	99
AT	246	355	529	502	512	520	533	546
DB	331	338	320	327	333	339	347	355
EC	364	326	320	306	312	317	325	333
KA	2406	2286	2387	2495	2544	2586	2650	2713
KB	1402	1363	1274	1247	1272	1293	1325	1357
KC	2633	2667	2846	2879	2936	2985	3058	3131
KP	1092	1153	1178	1203	1227	1247	1278	1309
Other Programs	612	557	659	609	621	631	647	662
Reimb - DOE	548	584	554	530	541	550	563	577
Reimb - NRC	3	3	2	2	2	2	2	2
Reimb - DOD Internal	87	335	305	280	286	290	298	305
Reimb - Other Internal	1163	1021	1052	1111	1133	1151	1180	1208
Reimb - Other External	190	170	178	187	191	194	199	204
TOTAL	**11153**	**11237**	**11701**	**11769**	**12000**	**12200**	**12500**	**12800**

SECTION J: RECONCILIATION

There are no significant differences between this Plan and last year's Plan, other than those mandated by the Call. As was the case last year, large increases in both capacity and requirements were enabled by the continuing improvement in the cost-performance of computing systems and equipment.

PART 4: TELECOMMUNICATIONS PLAN

SECTION A: TELECOMMUNICATIONS

A1. Strategies and Major Accomplishments

The primary thrust of LBL's telecommunications strategy is the provision of integrated digital voice and data services supported by a Laboratory-wide communications network to which any Laboratory computer, workstation, or terminal may be connected, and which provides gateway services to external networks. The principal vehicles for the implementation of this strategy are the Integrated Communications System (ICS), an on-site IBX S/80 digital PBX, and LBLnet, a collection of local Ethernets interconnected through a fiber-optic backbone and multiple bridges and routers.

Network demand at LBL is being driven by several factors, including the continuing shift of computing from centrally-managed facilities to locally-managed workstations, the increasing use of visualization and imaging in research, the exchange of large amounts of data in the course of collaborative research, and the continuing use of off-site computing resources. The LBL mass storage facility, expected to come into general use during FY 1992, will add yet another demand for network capacity.

Expansion of LBLnet is continuing, both in geographical extent and in bandwidth. Coincident with the ICS project, a major fiber optic cable corridor was developed from the Building 50 complex to major sites in the "Original Laboratory Site", Shops and Engineering Facilities Area, the East Canyon Areas (Materials Sciences and the Life Sciences), and the UCB Campus (Life Sciences). These fibers now provide inter-node ICS communication as well as inter-bridge and -router LBLnet communication, thus allowing nearly all parts of LBL to communicate via LBLnet.

During FY 1991, the number of interconnected Ethernets and the load on the LBLnet backbone continued to increase, so that there are now nearly 40 subnets and a backbone load of about 700 packets per second (pps). The number of personal Macintosh computers attached to LBLnet via Shiva FastPath gateways and twisted-pair AppleTalk networks is now more than 1,200.

The major milestone achieved in 1991 was the final acceptance of the ICS switch, and transfer of its operation from the installing subcontractor to LBL.

A2. Reconciliation to FY 1993 Plan

The major difference between this Plan and the FY 1993 Plan is the integration of the voice and data sections.

A3. Currently Utilized Services

Voice and data switching services are provided by the Integrated Communications System (ICS), which is based on an InteCom IBX S/80 switch. Cutover of data services to the IBX S/80 was completed in April, 1990, and of all services in May, 1990; the final acceptance of the installation occurred in December, 1991. The switch itself is being acquired on a lease-to-ownership that will be completed in FY 1997. ICS also includes a VMX 5000 voice messaging system that currently supports approximately 2,800 users. Nearly all ICS telephone sets are digital, with from four to thirty additional buttons that support features or additional lines. A few analog lines are used for special purposes, such as courtesy telephones in elevators and support for fax machines and personal modems. Foreign exchange tielines connect the Laboratory with frequently dialed sections of the San Francisco Bay Area as follows:

San Francisco	5 FEX trunks
Palo Alto	5 FEX trunks
Walnut Creek	7 FEX trunks
Hayward	6 FEX trunks
South and North Bay	15 IntraLATA WATS trunks

An additional 24 trunks connect LBL with the Federal Telecommunications System (FTS 2000), and voice access to the Lawrence Livermore National Laboratory is provided through a microwave link supported by Livermore.

A system diagram is shown in Exhibit LBL4-A1.

Arrangements are made with the University of California, Berkeley Campus for telephone facilities for Laboratory personnel occupying space in Campus buildings. This service is provided through the Campus CENTREX Central Office System.

Modifications and changes to the ICS service have been averaging about 170 orders per month to accommodate relocation of Laboratory personnel or additions or deletions of ICS features.

The LBL data communications environment includes both circuit- and packet-switched networking in support of computer system interconnection, terminal access to many Laboratory computer systems, distributed file and print services, and access to external networks, plus a variety of small systems dedicated to safety, security, and environmental functions.

LBLnet

Backbone Facilities

The current configuration of LBLnet Ethernets, and their attachments to external networks is shown in Exhibit LBL4-A2. Inter-building links are primarily fiber-optic cable, installed as part of the ICS project. In addition there are now almost 100 AppleTalk twisted-pair networks connected to LBLnet via Shiva FastPath gateways. Many of these are implemented using the new ICS project twisted pair wiring plant.

More than 2,000 systems are now interconnected through this complex of LANs, using five major network protocol families: OSI/GOSIP, DECNET, TCP/IP, AppleTalk and XNS. Connection to LBLnet also provides access to several external networks through the Bay Area Regional Research Network (BARRNET) and the Energy Science Network (ESnet). The demand for increased capacity and interconnectivity is fueled by a shift to the use of single-user workstations supported by file servers as well as by the expansion in the number of workstations.

LBLnet is composed of both bridged and routed subnets, each of which is served by a backbone subnet. The bridged backbone carries the most traffic and is an FDDI (100 mbps) subnetwork, while the routed backbone remains Ethernet-based (10 mbps). Most new connections to LBLnet's Ethernet-based subnets are now implemented using the new ICS project twisted-pair wiring plant.

LBL DECNET

The LBL DECNET connects almost all Laboratory VAX VMS and *unix* systems with a combination of FDDI Ethernet and dedicated point-to-point circuits. Connections between LBL DECNET and HEPnet sites are achieved through the ESnet T1 backbone.

LBL Internet

The LBL Internet connects Laboratory Unix systems, plus those VAX VMS, Macintosh, IBM PC and other systems that support TCP/IP. The on-site connection medium for the Internet is LBLnet supplemented by AppleTalk twisted-pair networks. The LBL Internet is connected to ESnet for primary external Internet access, with BARRNET in use for some local Bay Area systems.

XNS Network

The XNS network is a combination of Novel Netware (IPX) and 3COM IBM PC systems supporting variants of the XNS protocols. The XNS network is supported on the bridged portions of LBLnet.

AppleTalk Networks

There are more than 125 AppleTalk twisted pair networks now in use at LBL. They are used for both shared printing and file service. These systems range from 3 to 25 Macintoshes with 1 or 2 Apple Laserwriter printers each. Almost 100 of these AppleTalk networks are interconnected by LBLnet (using Shiva FastPath gateways) to provide access between Apple Macintosh systems and non-Apple systems on LBLnet.

Dataswitch Facilities

The ICS IBX S/80 provides asynchronous switching from interactive terminals and personal computers to the Central Computing Facility and other, distributed, computing facilities at the Laboratory, the UC Berkeley campus, and SLAC. Approximately 2100 IBX ports are connected to computers, terminals, and modems.

External Networks

BARRNET

LBL is a fully interconnected member of the Bay Area Regional Research Network (BARRNET) through T1 microwave and local line paths. This network provides interconnections for TCP/IP to UCB, UCSF, UC Davis, UC Santa Cruz, NASA Ames, Stanford University and over 75 bay area commercial research organizations.

BITNET/ONENET

BITNET provides access to several thousand computers in the academic and non-profit research communities in the US, Canada, and overseas. The original BITNET was an RSCS-only network, and did not permit remote login. It is in the process of merging with CSNET to form ONENET, which will accept TCP/IP as well as RSCS. Access to BITNET/ ONENET is provided through Central Facility systems via the UC Berkeley campus, or via gateways from any LBL internet node.

ESnet

ESnet provides access to all DOE Energy Sciences institutions around the US. LBL uses ESnet for its primary external Internet path and for all its external DECNET traffic. This includes almost all HEPnet traffic.

HEPnet

HEPnet has been almost totally replaced by DECNET service across ESnet. The few remaining dedicated point-to-point HEPnet lines maintained al LBL will be phased out during FY 1992.

Microwave Links

LBL currently supports microwave links to SLAC and LLNL. The latter is an element of Livermore's LLIX digital PBX project. This link is currently in use for voice tie-lines between LLNL and LBL, and also supports a BARRNET T1 path.

Data Communications in Support of Safety, Security, and Environmental Functions

Fire Alarm System

The system consists of a proprietary signalling system and a computerized dispatch information system. The proprietary Pyrotronics Multilarm VI system provides the location of 1,632 response points by English-language messages on a video display terminal and logging printer, with backup indication by LED annunciator. Pyrotronics System 3 installations supplement the system to provide local alarm service within buildings. The system also provides remote control of two fire pumps and the Laboratory water supply. The Datapoint database system provides dispatch information to a watch station video display terminal and to printers located at the Laboratory security office and the fire apparatus room. (See Exhibit LBL4-A3.)

Computer-Controlled Cardkey System

Physical security through controlled access for critical buildings and rooms is provided through a Cardkey PASS-4000 Security System based on a DEC LSI-11/23. Approximately 100 terminals are connected to the system through dedicated lines. Each terminal can control access to a particular area and simultaneously monitor several alarm circuits. Access is controlled by the use of magnetically-encoded cards assigned to personnel. The access capability of each card is controlled by the central computer, which can easily invalidate a card if necessary. The alarm circuits are not limited to door switches and motion detectors, but can handle water sensors, temperature limit sensors, pressure limit sensors, etc., as well. The Cardkey system also provides continuous monitoring of twenty-two rescue boxes via r.f. transmitters and decoding receivers. These boxes contain equipment to be used in emergencies; the transmitters are normally silent, but begin transmission as soon as the box is opened. The Cardkey alarm feature now also supports the Energy Management Control System (EMCS) by sending off-hours EMCS alarms to the Police Dispatcher, who can then locate and advise Construction and Maintenance personnel that there is a problem in a specific building. (See Exhibit LBL4-A4.)

Energy Management Control System (EMCS)

A distributed network system is in place, with eight processors monitoring and controlling cooling towers, the compressed-air plant, and HVAC systems; additional load centers, including three chemistry buildings and a bioscience building, will come on line in the near future. Telecommunications support for this system consists of a 50 twisted-pair cable and a several ICS circuits. Monitoring and operator control may be exercised from terminals at several locations, including the Maintenance Office, Accelerator Control Rooms, etc. (See Exhibit LBL4-A4.)

Other Data Communications

Laboratory data communications not ADP-related are limited to TWX/TELEX service, facsimile systems, and various government and commercial database vendors.

A4. Planned Minor Initiatives

LBLnet

DECNET Phase V: During FY 1992 LBL's transition to DECNET Phase V will continue, testing its interoperability with Phase IV systems in preparation for a full transition in FY 1993.

GOSIP Gateway Project: During FY 1992 the first implementation of the FTAM and MHS (X.400) Gateway Project will take place, testing early FTAM and X.400 implementations and experimenting with X.400 to SMTP gateways. This work is the cornerstone of LBL's GOSIP Transition Plan.

Bridged Backbone Enhancement: During FY 1992 the FDDI bridged backbone subnet will be further enhanced to accommotdate increases in bridged network activity.

Router Enhancements: During FY 1992 the first part of a two-year router enhancement project will take place. This will allow eventual transition to an FDDI routed backbone subnet.

Gigabit Testbed Network Efforts: LBL will continue to promote the development of gigabit networks and their applications by participation in

advanced network research and development activities in ESnet and BARRNET, the BLANCA testbed, the Bay Area Gigabit Testbed, the MAGIC testbed, and gigabit LAN standards activities.

Fire Alarm System

Engineering coordination is continuing for the new signalling circuits that will avoid known slide areas in order to improve disaster-related response. Existing building alarm systems will be modified as necessary to meet changed building and fire codes and to improve effectiveness and reliability while reducing the maintenance effort. LBL will also restructure the system to separate non-life-safety systems from the main console.

Cardkey System

The existing cardkey system has reached the end of its useful life. The company will no longer support the software for the system and is rapidly phasing out support for most of the earlier that this system uses. It will be upgraded to a modern, supported system when funds become available.

Energy Management Control System

LBL plans to replace obsolete, inefficient, and unreliable control systems throughout the Laboratory site with modern control equipment for existing cooling tower fans and pumps, interior lighting, variable air volume fume hoods, and HVAC systems. This effort will proceed on a building-by-building basis over the next several years, as funds become available.

Table LBL4-A-1

Voice Program System Description

SITE:	Lawrence Berkeley Laboratory		
SIZE:	Lines:	7500 capacity	
	Stations:	4500 in service	
	Trunks:	DID	189
		DDCO	93
		FTS 2000	24
		FEX	23
		IntraLATA WATS	15
		LLNL Tieline	24
TYPE:	InteCom IBX S/80		
STATUS:	Owned		
DATE:	Cutover May 4, 1990		
COMSEC Protection:	No		

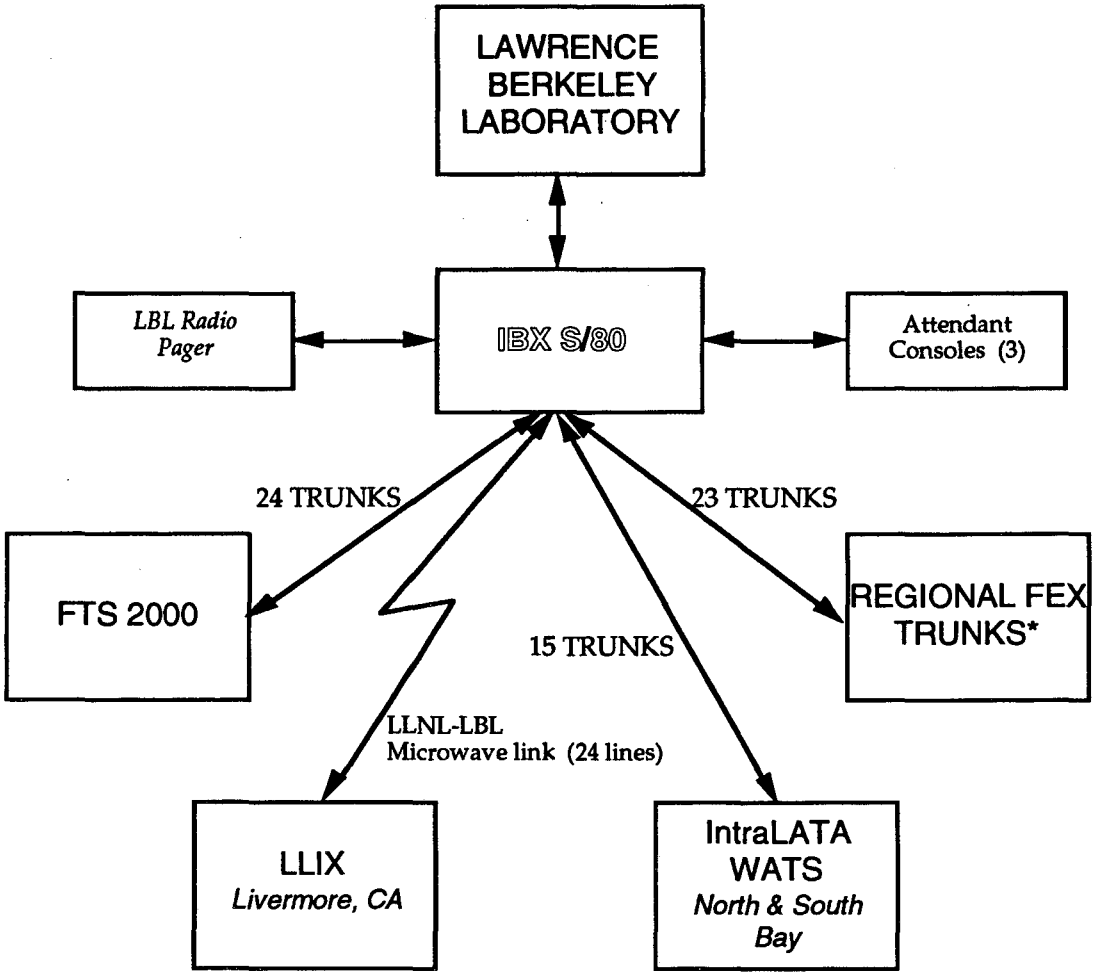

* *San Francisco:*	*5*	*trunks*
Palo Alto:	*5*	*trunks*
Walnut Creek:	*7*	*trunks*
Hayward:	*6*	*trunks*

Exhibit LBL4-A1: Existing LBL Telephone System

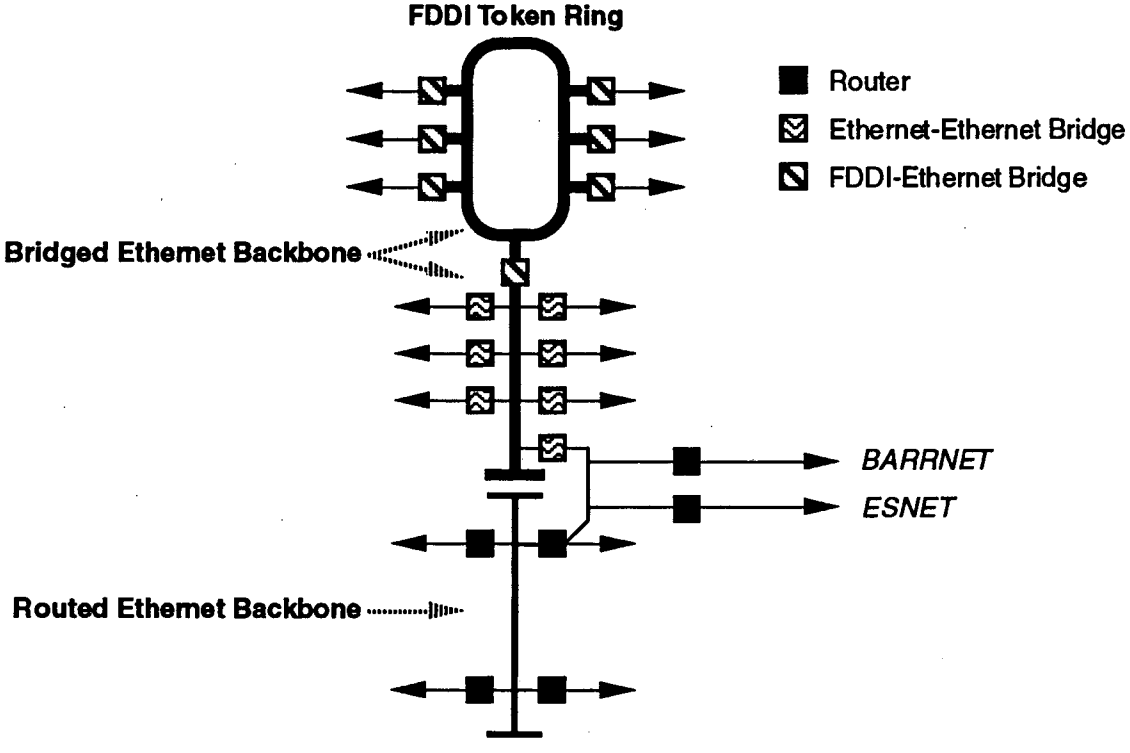

Exhibit LBL4-A2: Simplified Overview of LBLnet as of December, 1991

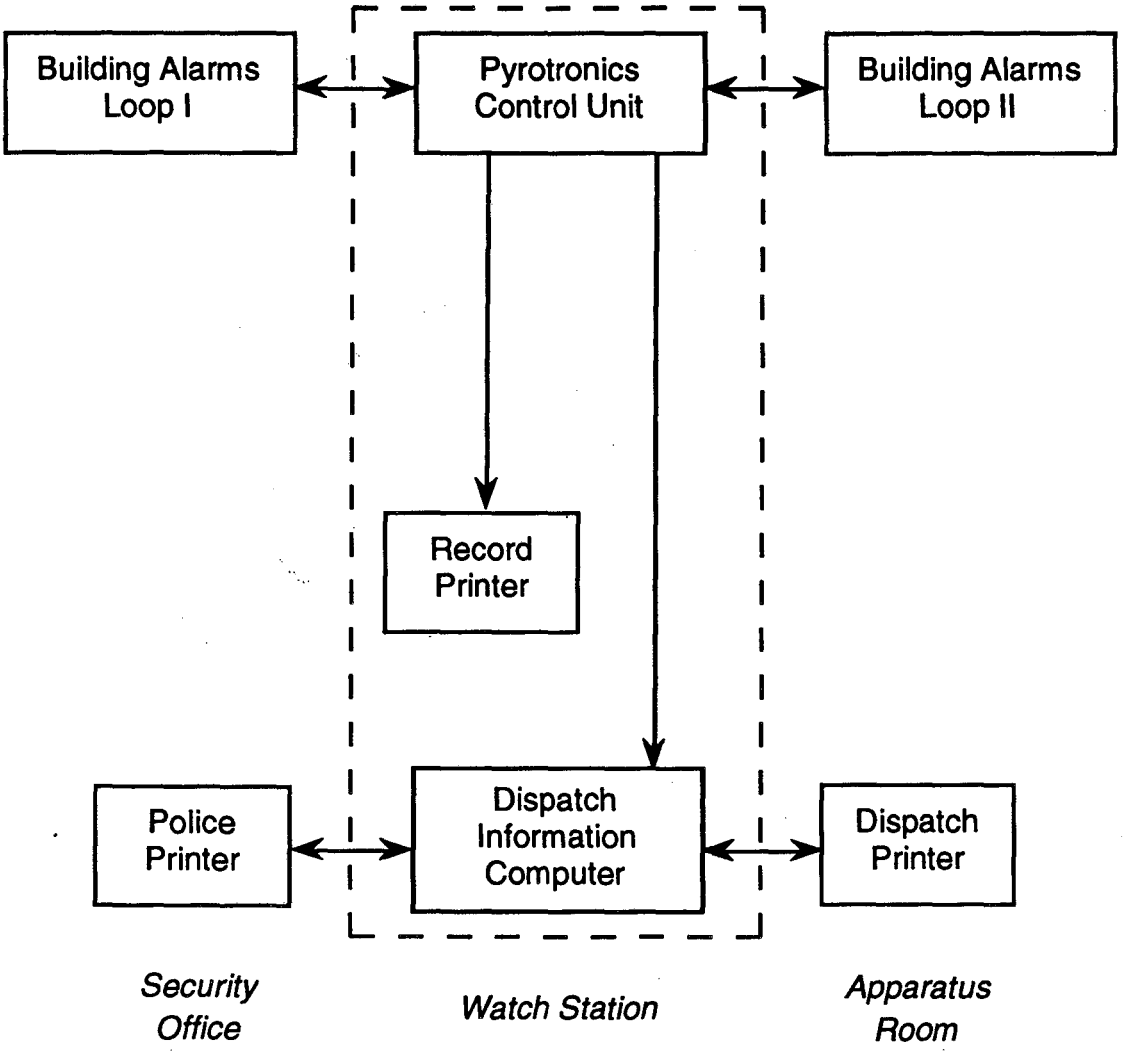

Exhibit LBL4-A3: Existing Fire Alarm System

Cardkey System

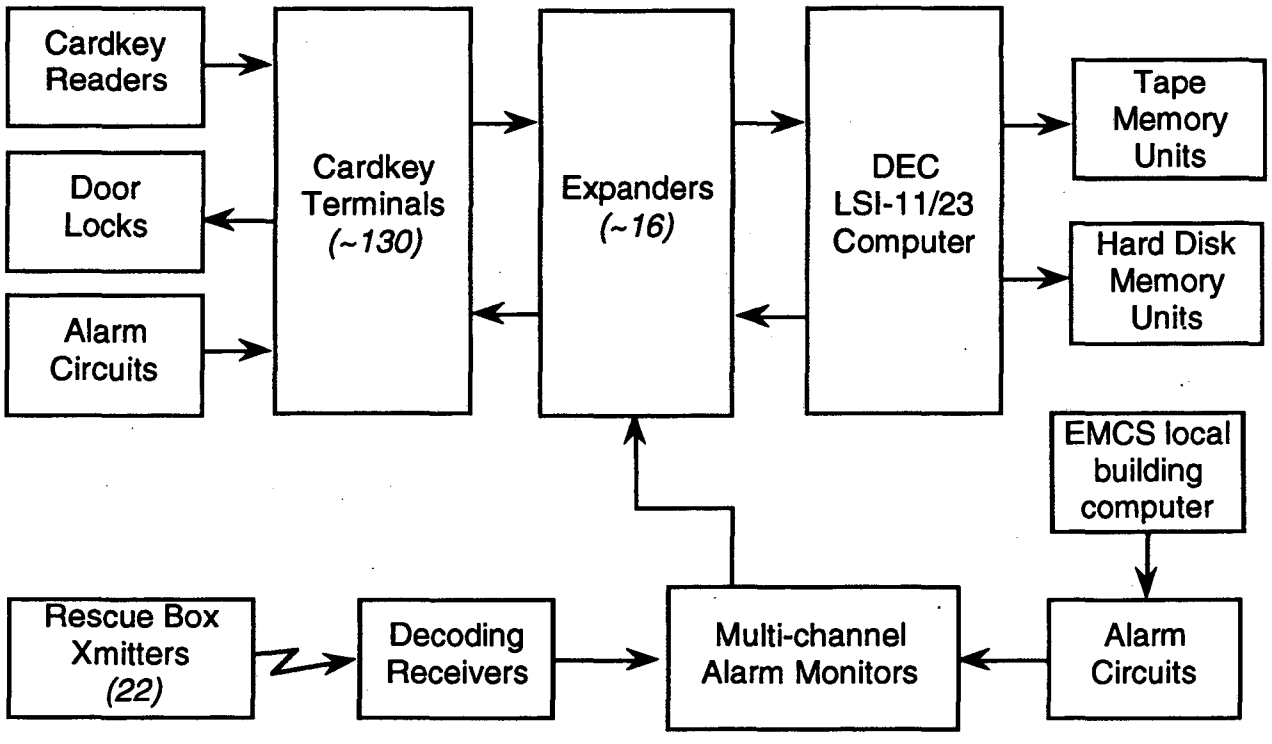

Energy Management Control System

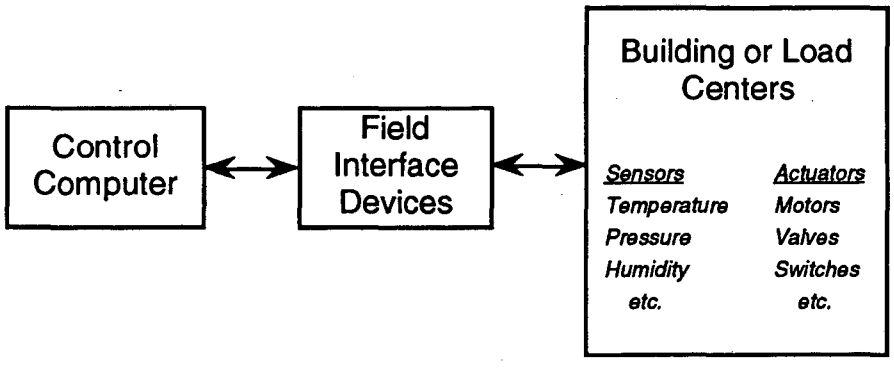

Exhibit LBL4-A4: Cardkey and In-House Energy Management Systems

A5. Planned Major Initiatives

None.

A6. TELECOMMUNICATIONS RESOURCE ESTIMATES

SITE Lawrence Berkeley Laboratory -- LBL SCHEDULE 4-1 A

FUNCTIONAL AREA TELECOMMUNICATIONS

REPORTING CATEGORY	RESOURCE ESTIMATES IN THOUSANDS							
	FY 1991	FY 1992	FY 1993	FY 1994	FY 1995	FY 1996	FY 1997	FY 1998
1. CAPITAL INVESTMENTS								
A. Purchase of hardware	1747	1588	1797	1697				
B. Purchase of software	0	0	0	0				
C. Site Preparation	0	35	0	0				
Subtotal Category 1	1747	1623	1797	1697	1700	1700	1000	300
2. TELECOMMUNICATONS OPERATING COSTS								
A. Government Workyears								
B. Inhouse Personnel Costs								
1. System operations	823	920	957	995				
2. System maintenance	266	322	337	352				
3. Analysis/design/eng.	607	557	582	607				
4. System studies/other	95	74	79	83				
C. Other inhouse operating costs								
1. Hardware/software purch	246	298	178	179				
2. Lease of hardware	0	0	0	0				
3. Lease of software	0	0	0	0				
4. Space	0	0	0	0				
5. Supplies/other	287	275	293	297				
Subtotal Category 2	2324	2446	2425	2513				
3. COMMERCIAL SERVICES								
A. Leased voice communications	766	791	818	845				
B. Leased data communications	180	154	128	133				
C. Operations and maintenance	330	341	353	364				
D. Systems analysis, programming, design, and engineering	0	0	0	0				
E. Studies and other	17	17	18	18				
Subtotal Category 3	1293	1304	1316	1360				
4. NONCOMMERCIAL SERVICES								
A. Payments								
1. Other DOE sites*	13	8	20	24				
2. Other Exec. Branch agencies	0	0	0	0				
3. Other noncommercial services	49	51	52	54				
B. Offsetting collections (-)	0	0	0	0				
Subtotal Category 4 (net)	62	59	72	78				
Subtotal for combined categories 2+3+4	3680	3809	3814	3951	4092	4239	4392	4549
Total	5427	5432	5611	5648	5792	5939	5392	4849

Note: Figures in Section 2A are not included in subtotal for Category 2 or Totals

**4A1: 100% FTS 2000*

Schedule 4-5.1 (of 4)

Computer Networking Resources

For site-managed networks, complete all items. For external networks, complete only items 1 through 9.

1. Network name: LBLnet
2. Network acronym: LBLnet
3. X Currently utilized network/system _____ Planned network/system*
   *Implementation planned for FY__ *Type of initiative: ____ Minor ____ Major
4. X Site-managed network ____ External network**
   **Network owner: _____
   **Host computing system: _____
   **Host address: _____
   **Registry organization: _____
5. Network management organization: ICSD CNR
   Point of contact: R. L. Fink Telephone number: FTS 451-5642
   Address: Lawrence Berkeley Laboratory, MS 50B-2258
   Berkeley, CA 94720
6. Network access: _____ Open X Limited _____ Restricted (Secure OPLAN is restricted)
   To whom? LBL Personnel and related collaborators
7. Protocol(s) supported: TCP/IP; DECNET; AppleTalk; XNS; OSI/GOSIP
8. Gateway access used: Internet and DECNET via ESnet and BARRNET; BITNET
9. Community of service: All of LBL and its collaborators
10. Network operation organization: ICSD CNR/CNFO
    Point of contact: Sig Rogers Telephone number: FTS 451-6713
    Address: Lawrence Berkeley Laboratory, MS 50B-2258
    Berkeley, CA 94720
11. Point of technical contact (if different from above): R. L. Fink
    Telephone number: FTS 451-5692
    Address: Lawrence Berkeley Laboratory, MS 50B-2258
    Berkeley, CA 94720
12. Administrative point of contact: *See # 5* Telephone number: _____
    Address: _____
13. Network topology: FDDI, Ethernet, and LocalTalk
    Primary nodes (number/location): 4, located in ICS Node Sites 1, 2, 3, and 4
14. Transmission technology used: Fiber, coax, and twisted pair
15. Hardware used: Digital bridges; Proteon and cisco routers
16. Operating system used: VMS, *unix*, MacOS, DOS/OS2
17. Applications supported: virtual terminal, file transfer, mail, distributed file systems, X-windows, specialty control systems, directory services
18. Security restraints employed: password
19. GOSIP standards/compliance: in development phase of FTAM, MHS (X.400); directory services (X.500); field testing DECNET Phase V (TP4/CLNP transport)

Schedule 4-5.2 (of 4)

Computer Networking Resources

For site-managed networks, complete all items. For external networks, complete only items 1 through 9.

1. Network name: Energy Sciences Network
2. Network acronym: ESnet
3. X Currently utilized network/system ____ Planned network/system*
   *Implementation planned for FY__ *Type of initiative: ____ Minor ____ Major
4. ____ Site-managed network X External network**
   **Network owner: DOE ER
   **Host computing system: Cray systems at NERSC
   **Host address: ____
   **Registry organization: DOE
5. Network management organization: LLNL/NERSC
   Point of contact: Jim Leighton Telephone number: FTS 532-4025
   Address: Lawrence Livermore National Laboratory, L-561
   Livermore, CA 94550
6. Network access: ____ Open X Limited ____ Restricted (Secure OPLAN is restricted)
   To whom? DOE-approved collaborators
7. Protocol(s) supported: TCP/IP; DECNET; OSI/GOSIP
8. Gateway access used: Proteon and cisco routers at LBL
9. Community of service: DOE ER research and education users
10. Network operation organization: ____
    Point of contact: ____ Telephone number: ____
    Address: ____
11. Point of technical contact (if different from above): ____
    Telephone number: ____
    Address: ____
12. Administrative point of contact: ____ Telephone number: ____
    Address: ____
13. Network topology: ____
    Primary nodes (number/location): ____
14. Transmission technology used: ____
15. Hardware used: ____
16. Operating system used: ____
17. Applications supported: ____
18. Security restraints employed: ____
19. GOSIP standards/compliance: ____

Schedule 4-5.3 (of 4)

Computer Networking Resources

For site-managed networks, complete all items. For external networks, complete only items 1 through 9.

1. Network name: Bay Area Regional Research Network
2. Network acronym: BARRNET
3. X Currently utilized network/system ____ Planned network/system*
   *Implementation planned for FY__ *Type of initiative: ____ Minor ____ Major
4. ____ Site-managed network X External network**
   **Network owner: BARRNET Consortium, Stanford University
   **Host computing system: n/a
   **Host address: n/a
   **Registry organization: NSF
5. Network management organization: Stanford U.
   Point of contact: William Yundt Telephone number: (415) 723-3104
   Address: Stanford University
   Stanford, CA
6. Network access: ____ Open X Limited ____ Restricted (Secure OPLAN is restricted)
   To whom? BARRNET-approved collaborators
7. Protocol(s) supported: TCP/IP
8. Gateway access used: Proteon router at LBL
9. Community of service: research and education
10. Network operation organization: ____
    Point of contact: ____ Telephone number: ____
    Address: ____
11. Point of technical contact (if different from above): ____
    Telephone number: ____
    Address: ____
12. Administrative point of contact: ____ Telephone number: ____
    Address: ____
13. Network topology: ____
    Primary nodes (number/location): ____
14. Transmission technology used: ____
15. Hardware used: ____
16. Operating system used: ____
17. Applications supported: ____
18. Security restraints employed: ____
19. GOSIP standards/compliance: ____

Schedule 4-5.4 (of 4)

Computer Networking Resources

For site-managed networks, complete all items. For external networks, complete only items 1 through 9.

1. Network name: BITNET
2. Network acronym: BITNET
3. X Currently utilized network/system ____ Planned network/system*
   *Implementation planned for FY__ *Type of initiative: ____ Minor ____ Major
4. ____ Site-managed network X External network**
   **Network owner: Corporation for Research and Educational Networking (CREN)
   **Host computing system: n/a
   **Host address: n/a
   **Registry organization: CREN
5. Network management organization: CREN
   Point of contact: Jim Conklin Telephone number: (202) 872-4200
   Address: 1112 Sixteenth St., NW, Suite 600
   Washington, DC 20036
6. Network access: ____ Open X Limited ____ Restricted (Secure OPLAN is restricted)
   To whom? CREN members and affiliates
7. Protocol(s) supported: TCP/IP; RSCS
8. Gateway access used: A VAX/VMS system at LBL
9. Community of service: research and education
10. Network operation organization: ____
    Point of contact: ____ Telephone number: ____
    Address: ____
11. Point of technical contact (if different from above): ____
    Telephone number: ____
    Address: ____
12. Administrative point of contact: ____ Telephone number: ____
    Address: ____
13. Network topology: ____
    Primary nodes (number/location): ____
14. Transmission technology used: ____
15. Hardware used: ____
16. Operating system used: ____
17. Applications supported: ____
18. Security restraints employed: ____
19. GOSIP standards/compliance: ____

SECTION B. FREQUENCY SPECTRUM-DEPENDENT COMMUNICATIONS

B1. Strategies and Major Accomplishments

In September, 1990, the (Federal) Interdepartmental Radio Advisory Committee (IRAC) approved a new plan for frequency allotment based on 12.5 Khz spectrum width. The plan requires that all older radio equipment—which includes the entire LBL VHF radio system—be replaced with new, spectrum-efficient 12.5 Khz bandwidth units by 2002. LBL has begun investigation of replacement systems. At this point, the most promising appears to be a UHF trunking system that could be shared among LBL, LLNL, SLAC, and DOE-SF.

B2. Reconciliation to FY 1993 Plan

There are no significant changes.

B3. Currently Utilized Services

Radiocommunications

Laboratory radio systems consist of 17 base stations, 64 mobile stations (including transmitters in 22 rescue boxes distributed about the LBL site), and approximately 195 portable stations. These systems provide two-way radio communications for various important service functions, emergency functions, and field crews. These include transportation of materials, fire, police, safety services, and Earth Sciences research field crews.

The system is currently scattered around the Laboratory on a "space-available" basis. It should be relocated into a secure environment with emergency power. The antenna systems should be relocated also, to a central tower, to provide better coverage and more reliable communications.

Radio page systems provide service to page approximately 260 individuals.

The Earth Sciences Division conducts research investigations at remote field sites requiring use of FM radios for communication and coordination. These radios operate on the 160-170 and 214-218 Mhz bands. The system consists of multiple vehicle-mounted mobile stations and "Walkie Talkie" radios. The site

investigators also use the same bands for radio telemetry to transmit data acquired by remote sensors to a central receiver for recording and analysis.

Industrial, Scientific, and Medical Equipment and Systems

The Medical Microwave System provides one-way transmission of data from the treatment planning facility in Building 55 to Cowell Hospital on the Berkeley Campus. Two other microwave systems, used for voice and data traffic, are described in Section B1.

B4. Planned Minor Initiatives

The present service level is satisfactory. Additions planned at present include more bands to accommodate anticipated data transmission needs of the Geophysics Group. A gradual increase in the number of units is expected for all the radio users. Several user groups including the Fire and Police Departments and Construction and Maintenance have implemented a "Channel Guard" system. The Fire Department is installing a new Motorola Centracom II dispatching console, and plans to upgrade their Mutual Aid system with the addition of a remote radio base station in Tilden Park and a radio, telephone, and computer link with the City of Berkeley Fire Department.

C5. Planned Major Initiatives

None.

B6. TELECOMMUNICATIONS RESOURCE ESTIMATES

SITE Lawrence Berkeley Laboratory -- LBL SCHEDULE 4-1 B

FUNCTIONAL AREA: FREQUENCY SPECTRUM-DEPENDENT COMMUNICATIONS

REPORTING CATEGORY	RESOURCE ESTIMATES IN THOUSANDS							
	FY 1991	FY 1992	FY 1993	FY 1994	FY 1995	FY 1996	FY 1997	FY 1998
1. CAPITAL INVESTMENTS								
A. Purchase of Hardware	0	55	30	30				
B. Purchase of Software								
C. Site Preparation								
Subtotal Category 1	0	55	30	30	30	30	200	200
2. TELECOMMUNICATIONS OPERATING COSTS								
A. Government Workyears								
B. In-House Personnel Costs								
1. System Operations								
2. System Maintenance	55	60	62	64				
3. Analysis/Design/Engineering	28	30	35	38				
4. System Studies & Other								
C. Other In-House Operating Costs								
1. Hardware/Software Purchases								
2. Lease of Hardware								
3. Lease of Software								
4. Space								
5. Supplies & Other	9	10	11	12				
Subtotal Category 2	92	100	108	114				
3. COMMERCIAL SERVICES								
A. Leased Voice Communications								
B. Leased Data Communications								
C. Operations and Maintenance								
D. Systems Analysis, Programming Design, and Engineering								
E. Studies and Other								
Subtotal Category 3	0	0	0	0				
4. NON-COMMERCIAL SERVICES								
A. Payments								
1. Other DOE Sites								
2. Other Exec. Branch Agencies								
3. Other Non-commercial services								
B. Offsetting Collections (-)								
Subtotal Category 4 (net)	0	0	0	0				
Subtotal for combined categories 2+3+4	92	100	108	114	121	128	136	144
GRAND TOTAL	**92**	**155**	**138**	**144**	**151**	**158**	**336**	**344**

Figures in Section 2A are NOT included in Category 2 or Grand Total

SECTION C. OTHER TELESERVICES ACTIVITIES AND PROGRAMS

C1. Teleconferencing Activities

C1.1. Strategies and Major Accomplishments

None at the moment, although we are beginning to consider the possibility of substituting individual interactive video conferencing for large-scale centralized facilities.

C1.2. Reconciliation to FY 1993 Plan

There are no significant changes.

C1.3. Currently Utilized Services

There are two small video conferencing facilities in use at LBL at the present time, both of which are primarily used in support of the High Energy Physics Program. One joins LBL and SLAC; the other, LBL, Fermi, and the SSCL.

C1.4. Planned Minor Initiatives

None.

C1.5. Planned Major Initiatives

None.

C1.6 TELECOMMUNICATIONS RESOURCE ESTIMATES

SITE Lawrence Berkeley Laboratory -- LBL SCHEDULE 4-1 C1

FUNCTIONAL AREA: TELECONFERENCING

REPORTING CATEGORY	RESOURCE ESTIMATES IN THOUSANDS							
	FY 1991	FY 1992	FY 1993	FY 1994	FY 1995	FY 1996	FY 1997	FY 1998
1. CAPITAL INVESTMENTS								
A. Purchase of Hardware	50	60	100	50				
B. Purchase of Software								
C. Site Preparation	10	10	30	0				
Subtotal Category 1	60	70	130	50				
2. TELECOMMUNICATIONS OPERATING COSTS								
A. Government Workyears								
B. In-House Personnel Costs								
1. System Operations								
2. System Maintenance	40	43	46	49				
3. Analysis/Design/Engineering	5	5	5	5				
4. System Studies & Other	5	5	5	5				
C. Other In-House Operating Costs								
1. Hardware/Software Purchases								
2. Lease of Hardware								
3. Lease of Software								
4. Space								
5. Supplies & Other	7	8	9	9				
Subtotal Category 2	57	61	65	68				
3. COMMERCIAL SERVICES								
A. Leased Voice Communications								
B. Leased Data Communications								
C. Operations and Maintenance								
D. Systems Analysis, Programming Design, and Engineering								
E. Studies and Other								
Subtotal Category 3	0	0	0	0				
4. NON-COMMERCIAL SERVICES								
A. Payments								
1. Other DOE Sites								
2. Other Exec. Branch Agencies								
3. Other Non-commercial services								
B. Offsetting Collections (-)								
Subtotal Category 4 (net)	0	0	0	0				
Subtotal for combined categories 2+3+4	57	61	65	68	72	76	81	86
GRAND TOTAL	**117**	**131**	**195**	**118**	**72**	**76**	**81**	**86**

Figures in Section 2A are NOT included in Category 2 or Grand Total

C4. Teleprocessing Services Program

Completed Schedule 4-4 forms are attached.

(In the OIRM copies only.)

PART 5: PRINTING AND PUBLISHING PLAN

SECTION B. SOFTWARE MANAGEMENT PLANS AND STRATEGIES

B1. Accomplishments. The planned phase-out of the Autologic Micro 5 has been completed. A Linotronic model 60, 11" by 17" 600 dpi machine will be procured in FY 1992.

The Laboratory continues to shift to desktop publishing, but the need for composition still exists and will probably remain constant. Postscript appears to be the language of choice for all composition at LBL. Presently, we are buying it through the RPPO, but need the requested in-house capability.

B2. Printing Environments

Composition

FY 1992	Add a color workstation
FY 1993	No planned changes
FY 1994	No planned changes

Authorized Printing Plant

FY 1992	No planned changes
FY 1993	Replace collator; add a Kodak high-speed printer; add a two-unit Perfection offset press
FY 1994	Add a Canon color copier; replace the paper cutter

Duplicating Facilities

None

(The schedules for Part 5 were distributed separately, in November, 1991.)

LAWRENCE BERKELEY LABORATORY
UNIVERSITY OF CALIFORNIA
TECHNICAL INFORMATION DEPARTMENT
BERKELEY, CALIFORNIA 94720