PUB-5388

Conceptual Design Report
ALS Beamlines Initiative

February 1994

Project Number 96-LBL

Lawrence Berkeley Laboratory, University of California, Berkeley, California 94720
Prepared for U.S. Department of Energy under Contract No. DE-AC03-76SF00098

ADVANCED LIGHT SOURCE BEAMLINES INITIATIVE CONCEPTUAL DESIGN REPORT

April 1994

LAWRENCE BERKELEY LABORATORY
UNIVERSITY OF CALIFORNIA

Prepared for the US. Department of Energy under Contract No. DE-AC03-76SF00098

CONTENTS

1. OVERVIEW 1

2. INTRODUCTION 5

Synchrotron Radiation Characteristics 6
Research Opportunities 9
Baseline Project Summary 18

3. INSERTION DEVICES 21

Insertion-Device Characteristics 21
Undulator U8.0 23
Undulator U10.0 42
Undulator 3.65 43
Crossed-Field Undulator UX 44
Wiggler W16.0 48

4. BEAM LINES 55

Beamline Characteristics 55
U8.0—Bend-Magnet Two-Photon Beamline Complex 56
U10.0 Beamline 70
U3.65 Beamline 75
UX Beamline 77
W16.0 Beamline 78

5. CONVENTIONAL FACILITIES 85

6. SCHEDULE AND COST ESTIMATE 91

Schedule 91
Cost Estimate 92

7. REFERENCES 99

APPENDIX A. CONCEPTUAL DESIGN FOR CONVENTIONAL FACILITIES

APPENDIX B. PROJECT COST ESTIMATE DETAILS

1.
OVERVIEW

THE ability to harness electromagnetic radiation has played a significant role in the development of science and its subsequent benefit to society. Galileo's telescope and Leeuwenhoek's microscope extended the range of human observation to objects much farther away and much smaller than had ever been seen before. Pasteur used the microscope to peer into the world of microorganisms and then to link bacteria to the cause of disease. More recently, the development of the visible-light laser has created countless new opportunities for our society in the fields of science, medicine, and technology. These examples all involve the utilization of visible light—that portion of the electromagnetic spectrum to which our eyes respond. Equally important opportunities, leading to equally significant impacts on our lives, await us as we master the generation and utilization of shorter-wavelength radiation, at ultraviolet and x-ray wavelengths.

Over the past several decades, the construction of electron accelerators and storage rings dedicated to high-energy physics research has led to a new class of facilities—synchrotron light sources—that are enabling us to transform these new opportunities into reality. When a circulating electron beam is deflected by the bend magnets in an electron or positron storage ring, an intense flux of electromagnetic radiation, called synchrotron radiation, is produced. Relativistic effects cause this synchrotron radiation to be emitted in a narrow cone centered about the electron beam's instantaneous direction of travel. For electron energies of the order of 1 GeV, the half-angle of this cone is typically a fraction of a milliradian. Periodic magnetic structures known as undulators and wigglers (collectively, insertion devices) have now been developed for insertion into storage-ring straight sections, thereby producing not the sweeping searchlight of radiation that emanates from a bend magnet, but a more intense, highly directed beam of light.

To exploit the opportunities that such radiation affords us, construction began on the Advanced Light Source, with its initial complement of insertion devices, in FY 1987. Its completion in FY 1993 offers the nation's scientific and technical communities their first access to synchrotron radiation produced by a machine fully optimized for insertion devices. In proper perspective, therefore, the electron storage ring that is the major component of the ALS is merely a tool for propelling relativistic electrons through the ring's bend magnets and, especially, through the insertion devices that will occupy the ring's straight sections.

Accordingly, if the ALS is to be utilized effectively to explore newly identified opportunities and to meet the emerging needs of users from industry, academia, and government laboratories, an additional complement of undulators and wigglers is required, together with beamlines to collect the light from the insertion devices, and end stations, where the light is used in experiments. The project described here thus provides a second complement of experimental facilities for the ALS, including insertion devices and beamlines, as well as 20,200 gross square feet of finished light laboratory and office space for ALS users in the second floor of the ALS building. The full scope of the project is thus summarized schematically in Fig. 1-1.

For the purpose of providing well-validated conceptual designs, cost estimates, and schedule evaluations in this report, we describe the following set of insertion devices and beamline systems:

- An undulator and undulator and bend-magnet beamlines for two-photon studies of dynamical phenomena in materials
- An undulator and a beamline for chemical reaction dynamics
- An undulator and a beamline (including microscope) for soft x-ray microscopy of materials and surfaces
- An undulator to provide radiation with controlled circular polarization and a beamline for the investigation of materials and biological systems
- A wiggler and a beamline with two branches for materials science and atomic physics

The schedule and cost estimate described in Chapter 6 were obtained accordingly. However, it is important to emphasize that this list represents only a reasonable selection of insertion devices and beamlines. As the use of synchrotron radiation continues to grow, new techniques and new research directions continue to emerge, and research priorities are sure to evolve, in response both to our growing understanding of the natural world and to currently unimagined research possibilities. As a result, we expect the detailed scope of this project to evolve, *within the cost and schedule defined here* and in parallel with the scientific community's needs, over the scheduled three years of the project. The final choices of specific experimental facilities will be reviewed by the scientific community and reviewed and approved by the US. Department of Energy's Office of Basic Energy Sciences.

The total estimated cost (TEC) for this project is $52.6 million for a three-year construction schedule commencing in FY 1996. The total project cost (TPC) is $60.7 million. The newly constructed facilities will be in place and ready for commissioning at the end of FY 1998.

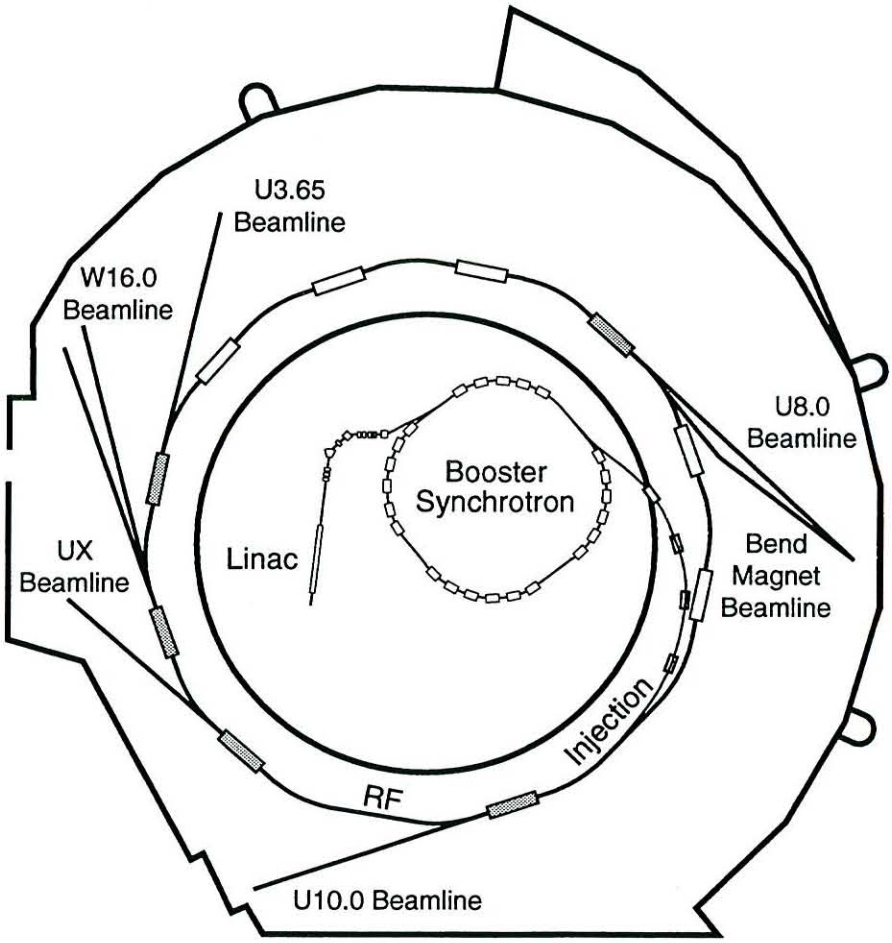

XBL 941-4018

Figure 1-1. A plan view of the Advanced Light Source, now in operation at the Lawrence Berkeley Laboratory, showing schematically the scope of the project described in the following chapters. The project includes outfitting of 20,200 gross square feet of light lab and office space in the second floor of the ALS building, as well as the construction of insertion devices and beamlines for use by ALS experimental teams. Four undulators, one wiggler, five insertion-device beamlines, and one bend-magnet beamline are described here, but the specific facilities to be constructed will depend on the expressed needs of the user community.

2.
INTRODUCTION

SYNCHROTRON radiation facilities are said to be entering their third generation. Originally, in electron synchrotrons built for high-energy physics research, synchrotron radiation was viewed as an annoyance, since the resulting electron-beam energy loss required compensation by powerful radio-frequency accelerating systems. However, it was soon recognized that synchrotron radiation could be useful for a wide range of physical, chemical, and biological experiments, quite unrelated to the original purpose of the accelerators. Although the scientific community has taken great advantage of the synchrotron radiation produced by these first-generation light sources, the properties of the accelerators were not at all well-matched to this secondary purpose.

More recently, electron storage rings specifically dedicated to producing synchrotron radiation have been designed, constructed, and operated. Most storage rings in this so-called second generation of synchrotron radiation sources have become operational in the past decade or so, both in the United States (the National Synchrotron Light Source at Brookhaven National Laboratory, Aladdin at the University of Wisconsin) and abroad (England, France, Germany, Japan). These newer facilities, while built expressly for the production of synchrotron radiation, were designed primarily for photon beamlines that arise from the storage rings' bend magnets (which serve to keep the electron beam in its approximately circular orbit).

Machines of the third generation, by contrast, will be optimized to produce light from *insertion devices*, devices placed in straight sections of the storage rings, generating radiation with dramatically enhanced spectral properties. These insertion devices—*undulators* and *wigglers* —are periodic magnetic structures in which electrons experience periodic reversals of direction as they traverse the length of the device. This is illustrated schematically in Fig. 2-1. A storage ring designed for optimum utilization of photon beams from such insertion devices must include a suitable number of long straight sections to accommodate the undulators and wigglers, and it must provide an electron beam with very small transverse dimensions so as to produce the brightest and most intense photon beams possible. *Beginning operation at the Lawrence Berkeley Laboratory as a national user facility in 1993, the 1.5-GeV Advanced Light Source, shown in Fig. 2-2, is the first soft x-ray synchrotron radiation facility in the world to*

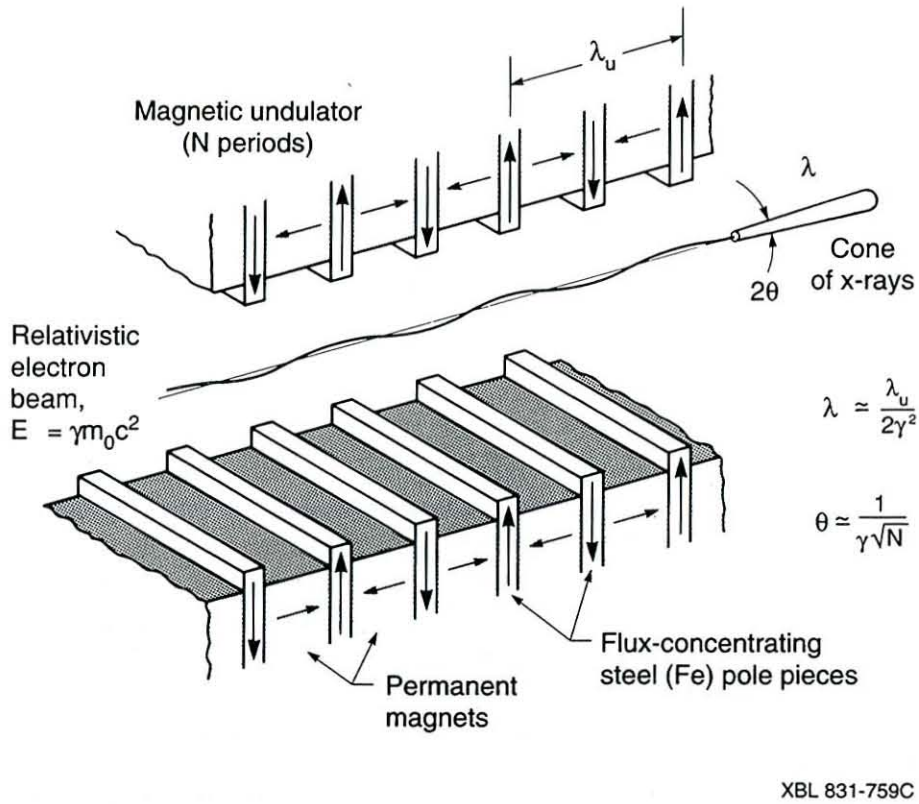

Figure 2-1. Schematic of a periodic magnet structure (an undulator) with N periods of length λ_u. The oscillations of the electron beam (of energy $\gamma m_0 c^2$) passing through the undulator produce ultraviolet and soft x-ray radiation of high spectral brightness and high coherent power. The radiation occurs at a wavelength λ in narrow spectral width $\lambda/\Delta\lambda \approx N$ and is propagated forward in a narrow cone of half-angle θ

incorporate these design features. The ALS is now offering world-leading photon capabilities for users from industry, academia, and the nation's government laboratories.

2.1 SYNCHROTRON RADIATION CHARACTERISTICS

In discussing the propagation properties of electromagnetic radiation, the density of the photon flux in phase space plays a fundamental role and is generally referred to as the *brightness*. Here we reserve this term for the phase-space density of the photon flux, evaluated in the forward direction and at the center of the source, that is, at the origin of the phase space:

$$\mathcal{B} = \frac{d^4 \mathcal{F}}{d\theta\, d\psi\, dx\, dy}\ , \tag{2-1}$$

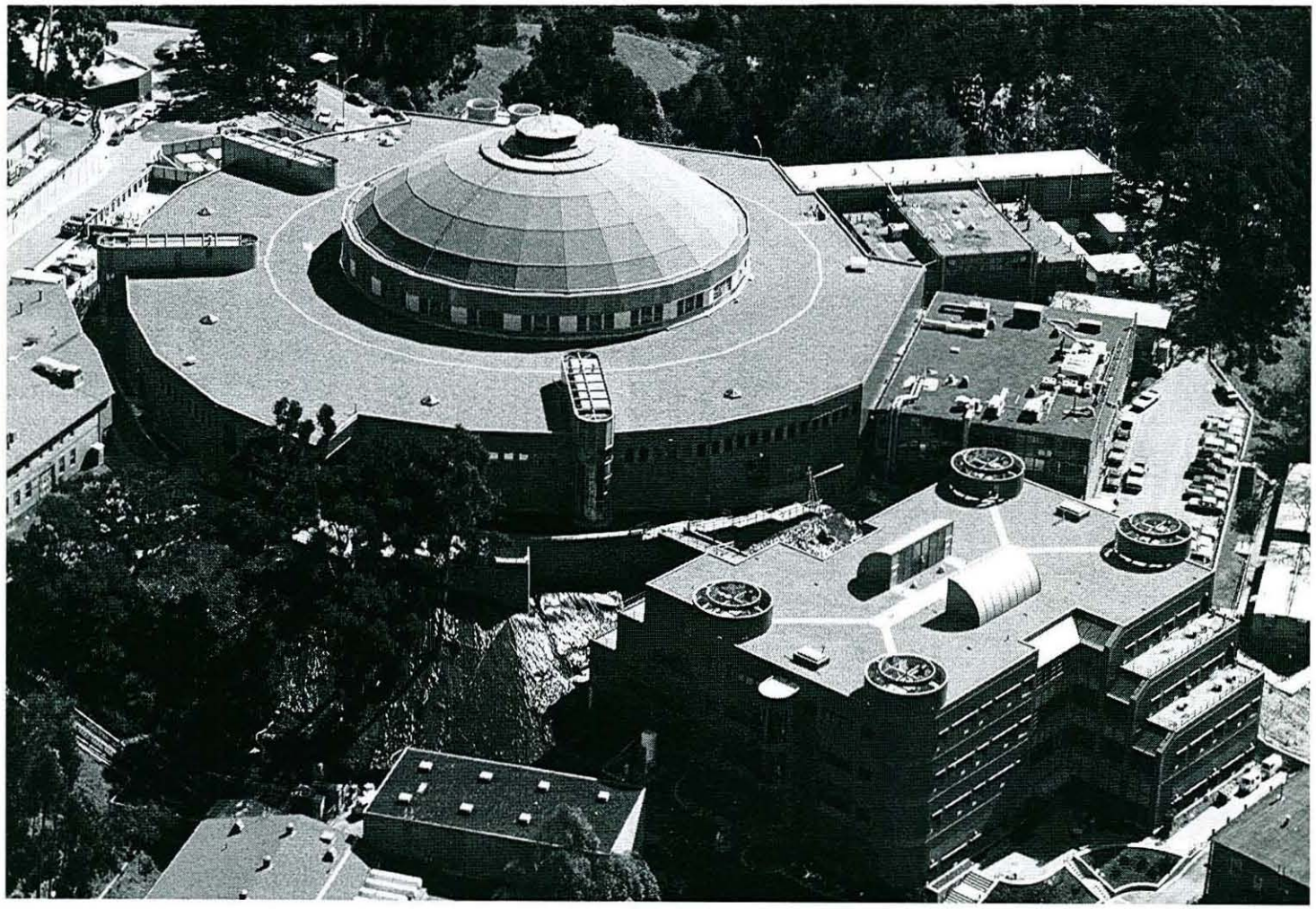

Figure 2-2. Photograph of the ALS, scheduled to begin operation in 1993.

where θ and ψ are the horizontal and vertical angles, and x and y are the horizontal and vertical coordinates, respectively. Accordingly, brightness is expressed in photons/(s·mm^2·mrad^2). (Note that this quantity is sometimes called the brilliance.) The brightness uniquely characterizes the strength of a radiation source, as brightness is invariant under propagation through linear optical elements, such as lenses or free space.

Integrating the phase-space density over the angles (or the position coordinates) gives the spatial (or angular) density of flux:

$$\frac{d^2\mathcal{F}}{dxdy} = \int \frac{d^4\mathcal{F}}{d\theta d\psi dxdy} d\theta d\psi \ , \tag{2-2a}$$

$$\frac{d^2\mathcal{F}}{d\theta d\psi} = \int \frac{d^4\mathcal{F}}{d\theta d\psi dxdy} dxdy \ . \tag{2-2b}$$

For synchrotron radiation, the *angular* density of flux [Eq. 2-2b] is the more familiar quantity, as it can be calculated from standard textbook formulas. However, it is *not* an invariant measure of the source strength, because its magnitude depends on the nature of the beamline focusing elements. Finally, the flux can be obtained by further integration:

$$\mathcal{F} = \int \frac{d^2\mathcal{F}}{d\theta d\psi} d\theta d\psi = \int \frac{d^2\mathcal{F}}{dxdy} dxdy \ . \tag{2-3}$$

The flux, expressed in photons/s, is another invariant that can be used to characterize the source strength.

It is generally convenient to consider the various differential fluxes introduced above in a small bandwidth around a given energy. In this case, we use the adjective *spectral*. Thus, we speak of the spectral brightness, spectral flux, the angular density of spectral flux, and so on. Typically, the spectral brightness and spectral flux are expressed as the brightness and flux, respectively, within a 0.1% bandwidth.

Yet another property of the photon beam from an undulator is its *coherence*. In the limited sense used here, coherence refers to the ability to form interference patterns when wave fronts are separated and then recombined. Although the photon beams from the ALS undulators are only partially coherent, they will nonetheless be satisfactory for many experiments that utilize phase-sensitive techniques, for example, x-ray interferometry and x-ray microholography.

Finally, the narrowness of the spectral emission line is set by the number of undulator periods, N. Again, this will be significantly increased at the ALS, the first synchrotron radiation source specifically optimized for undulator radiation. Narrow

spectral lines allow most of the generated photons to be concentrated in the most desired regions—at or near resonances of the atoms and molecules of interest.

2.2 RESEARCH OPPORTUNITIES

Exceptionally high spectral brightness is the new feature of third-generation synchrotron-radiation facilities. The storage rings at these facilities are designed to optimize brightness in two ways. The combination of a storage ring having a very low emittance with optimized undulators makes possible the generation of radiation with a spectral brightness that is a factor of 20 or more greater than that obtainable from second-generation sources, depending on the spectral range. In the past, order-of-magnitude increases in brightness have led to qualitatively new developments in spectroscopic and structural studies of both gas-phase and condensed matter.

High brightness translates into an ability to place a large number of photons into a small sample area. Directly benefiting from high brightness, therefore, are researchers in the life and physical sciences who hope to achieve enhanced spatial resolution, down to distance scales of several hundred angstroms in soft x-ray microscopy and spatially resolved ultraviolet and soft x-ray spectroscopy. As an example, the latter is likely to play an important role in the study of solid surfaces, which are mostly heterogeneous, making it difficult to interpret spectroscopic data obtained by illuminating the entire surface. With spatial resolution, spectral features can be directly associated with specific surface areas and structures. Imaging technology is advancing in step with that of undulators.

For the spectroscopist in search of spectral resolution, the benefits of brightness are equally substantial. Brightness leads to the ability to achieve such resolution without the usual penalty of a reduced signal and an increase in measuring time. Experiments with once impractically long measuring times now become reasonable to contemplate. For example, spectroscopy in atomic physics and chemistry will be enhanced because the high brightness will allow measurements to be made with tenuous gas-phase targets.

At the ALS, operating at 1.5 GeV, the radiation will cover the spectrum of photon energies from a few eV to several keV. This energy range is well-matched to the primary atomic resonances of the light elements, as well as the resonances of many molecular transitions. In addition, the corresponding wavelengths are comparable to important spatial scales, for example, the pitch and diameter of biochemical helices, the microstructural features of materials, and the feature sizes of next-generation electronic microcircuits. It is also important that the radiation be broadly tunable, a feature not available with any other high-brightness technology. Tunability permits, for example, resonances to be tracked as variables, such as the concentrations of perturbing neighbors, are changed in a given experiment.

For many advanced experiments, especially those aimed at studying the fast processes of chemical reactions, surface dynamics, and interface formation, short pulses are also required to time-freeze the action. For this reason, the ALS was designed for

very short electron bunch lengths, resulting in radiation pulses in the 30- to 50-ps regime. This will be particularly valuable in conjunction with pump-probe experiments, such as might be used for studying phase transitions with synchronous pulses from a visible laser and from an undulator producing shorter wavelength radiation. Likewise, life scientists hope that, if radiation damage due to the x-ray exposure can be avoided or minimized, it will be possible to image changes in functioning biological cells and cellular structures in near-natural environments.

The ALS also offers important opportunities for advances in industrial research and technology. A prime example is cutting-edge research in advanced lithography, addressing issues related to next-generation chips and beyond. Central to this research will be the development of advanced imaging techniques, probably by means of projection optics, for printing smaller circuit features than feasible with proximity printing. Other industrial applications also lie just ahead:

- X-ray fluorescence provides high-sensitivity elemental analysis. The technique of total x-ray reflection fluorescence (TXRF) is now used for examination of silicon wafers for contaminating impurities. Fluorescence microprobes provide trace-element analysis with spatial resolution that will soon approach the 1-μm level in an extremely diverse variety of applications, including the distribution of small strengthening particles in ceramics, the distribution of doping materials in semiconductors, the composition of inclusions in geological materials, and trace element analyses of biological materials.
- Photoelectron spectroscopy is a widely used tool for chemical-state analysis of a wide range of industrially important materials, including semiconductors, magnetic-storage materials, and polymers, but commercial instruments with the required combination of high spectral resolution, fast counting times, and sub-micrometer spatial resolution are lacking.
- X-ray lithography is the technique of choice for the production of high-aspect-ratio micro-electromechanical machines with sub-millimeter dimensions. It is projected that micromachines for miniaturized sensors, actuators, and motors will have substantial economic impacts on industries ranging from automobiles to health care.
- X-ray crystallography is the primary method used to determine the atomic structure of biological macromolecules—proteins, viruses, DNA and RNA. This structural information has led to an immense increase in our understanding of the biological processes that are mediated by these molecules. Specific therapeutic agents for human disease can now be designed based on the structure of the molecules involved—a significantly more rapid route to drug discovery than previously available.

Specific examples of the types of experiments that will be possible at the ALS were summarized in the conceptual design report for the ALS [*1–2 GeV Synchrotron Radiation Source Conceptual Design Report,* 1986] and have been described in more detail in a number of more recent reports and workshop proceedings [Baer, 1988; Dillard et al.,

1988; Eberhardt and Fadley, 1988; Kevan and Himpsel, 1988; Krause, Lindle, and Perera, 1988; Rothman et al., 1988; Carruthers, Oldham, and Attwood, 1990; *Combustion Dynamics Facility Scientific Program Summary*, 1990; Perera, Cowan, and Schlachter, 1991; Van Hove, Falicov, and Upton, 1991; *Applications of Circularly Polarized Photons at the ALS from a Bend-Magnet Source*, 1992; *Spectroscopic Imaging, Diffraction, and Holography with X-Ray Photoemission*, 1992; *Applications of the Advanced Light Source to Problems in the Earth, Soil, and Environmental Sciences*, 1992; *Putting Synchrotron Radiation to Work: Analytic Methods*, 1992; *Synchrotron Radiation in Transactinium Research*, 1992; *Working Group on Elliptical Wiggler*, 1993; *Soft X-Ray Interferometry*, 1993]. The applications cover diverse areas, including atomic and molecular physics; biology and medicine; chemical dynamics; and materials, interface, and surface science—as well as industrial research and technology. In the following sections, scientific opportunities are described that can be addressed by the baseline experimental facilities proposed for this project.

2.2.1 Spectroscopy of Materials, Interfaces, and Surfaces

Several of the most exciting applications of the ALS lie in the field of materials, interface, and surface science.

The ALS will allow significant advances in core-level spectroscopy, which today represents the mainstream of applied research with synchrotron radiation. Core-level spectroscopy can be applied to understanding many complex materials and interfaces that have technological applications. Highlights include the use of core-level shift and intensity measurements in characterizing metal-semiconductor interfaces and the application of EXAFS and photoelectron diffraction to determine the bonding geometries of a variety of surface and interface systems. A consequence of such studies will be predictive capabilities as to interface formation and materials engineering, both of which are crucial for many areas of high technology, including microelectronics. Atomic-resolution imaging of the surfaces and interfaces of new materials is one of the most pursued goals of the materials science community. The recently pioneered technique of electron-emission holography will assist in fulfilling this goal by coupling the atom- and state-selectivity of photoelectron spectroscopy with the structural information of a diffraction experiment.

Valence-band spectroscopy complements core-level measurements. For example, angle-resolved ultraviolet photoelectron spectroscopy (ARUPS) produces maps of the band structure (i.e., electron energy vs. wave vector or momentum) for the valence bands of single-crystal solids, ordered adsorbates, and epitaxial overlayers. High angular resolution is needed for materials with small Brillouin zones (e.g., reconstructed surfaces and complex solids). High-T_c superconductors and heavy-fermion systems are other examples of systems awaiting the application of high-resolution ARUPS.

Extreme sensitivity for determining short-range order on surfaces is offered by the technique of surface EXAFS, or SEXAFS. By tuning the photon energy to the absorption edge of an adsorbate atom on the surface of a material and using fluorescence or electron-

yield detection, one may determine the local bonding geometry, such as the numbers and distances of atoms that are adjacent to oxygen atoms on the surface of a partially oxidized metal or semiconductor.

SEXAFS and the related technique of x-ray absorption near-edge structure (XANES), also known as near-edge x-ray absorption fine structure (NEXAFS), are a powerful combination for the investigation of molecular orientations and bonding sites on surfaces. XANES is sensitive to bond energy and shape. Systems that can be studied range from diatomic molecules to thin polymer films bonded to surfaces. Molecular chemisorption systems are of fundamental importance in various technological processes, such as heterogeneous catalysis, reactive etching of semiconductor surfaces, or the packaging of electronic devices. With the use of fluorescence detection, samples may be studied in nonvacuum environments similar to those in real catalytic reactions.

The ALS furthermore has significant potential for defect spectroscopy of semiconductor interfaces and surfaces, for which no suitable probe now exists. Soft x-ray photoabsorption studies may be extended to determine the local structure around atoms present in very dilute concentrations in a host system; this will be an extremely important achievement in surface studies of precursor states, oxidation, poisoning, and chemical reactions on transition-metal catalysts.

Considerable information about the structure of surfaces and thin films can also be obtained with the technique of grazing-incidence x-ray scattering. Changing the angle of grazing incidence varies the depth of penetration of the highly collimated x-rays from tens of angstroms to tens of thousands of angstroms (that is, several micrometers). Scattering is confined to within this penetration depth, thereby providing a means of distinguishing the surface atoms from those in the interior. Almost all of the diffraction techniques applied to bulk materials may be applied to surfaces and thin films. The structure of reconstructed surfaces and adsorbed layers on metals and semiconductors can be examined. Interactions between surface atoms and chemisorbed molecules can be directly monitored. The lattice parameters, the identification of different crystalline components, crystallite sizes, and strain can be determined in polycrystalline films.

2.2.2 Soft X-ray Microscopy

Soft x-ray microscopy is an old idea that has been made practical by the advancing technologies of x-ray sources, x-ray optical components (lenses and mirrors), and x-ray detectors. In contrast to optical microscopy based on reflected light, the contrast in x-ray images is usually due to the absorption of radiation, as in radiography. However, it is also possible to use the photoelectrons emitted from the irradiated material to generate contrast. Images may be generated in a parallel (imaging) mode with appropriate x-ray or electron optics imaging the photons or electrons from a broadly illuminated sample. Alternatively, images may be generated in a serial (scanning) mode by focusing the incident x-ray beam to a small spot on the sample. The spatial resolution of soft x-ray microscopes based on absorption contrast is routinely better than 1000 angstroms and has reached the 300-angstrom range in some cases.

The high brightness of the ALS will transform soft x-ray microscopy from a largely demonstration technique into an important tool in the armamentarium of synchrotron-radiation techniques . Many, if not most, physical, chemical, and biological systems are inhomogeneous, consisting of multiple phases, domains, and other structures with characteristic dimensions at the micrometer level and below. Moreover, the relentless march of micro- and soon nanofabrication technology guarantees that systems of technological importance will be deliberately inhomogeneous at increasingly smaller length scales. With shrinking dimensions also comes an increased emphasis on surfaces and interfaces, which are often inhomogeneous. Moreover, processes at surfaces and interfaces may be dependent on local structures, such as defects, grain boundaries, edges, and corners. If it is difficult to foresee precisely where the ALS will have the most impact, it seems safe to predict that the achievement of high spatial resolution will be a major benefit for materials scientists, physicists, chemists, life scientists, and engineers. In many cases, this new capability will provide information that is available in no other way; in other cases, it will provide complementary information.

Demonstration experiments have shown that the technique is capable of imaging patterns such as the submicrometer features of an integrated circuit. By tuning the photon energy to match the absorption edge of specific elements, it has been possible to generate chemically specific maps of the constituents of polymer blends. In the life sciences, x-ray microscopy is beginning to fill an important niche between optical and electron microscopy by providing images of subcellular components in near-natural environments. With high-brightness undulator sources, successive images of the same object in real time may make it feasible to study the dynamics of biological or other processes. The considerable coherence of undulator radiation holds the promise of obtaining three-dimensional information from samples by x-ray holography.

An exciting prospect now being tested that will be greatly enhanced by the high brightness of the ALS is the combination of soft x-ray microscopy and spectroscopy (spectromicroscopy). As in x-ray microscopy, either imaging or scanning modes can be used for spectromicroscopy. Many processes will be susceptible to study by soft x-ray spectroscopy, which retains its unobtrusive and highly chemically specific character while acquiring sub-micrometer spatial resolution. An important example occurs in photoelectron spectromicroscopy, where, by use of an electron-energy spectrometer to select the photoelectron energy detected, one can map particular elements and distinguish different chemical bonding states of the same element. Spatial resolutions in the range from 0.1 to 0.5 micrometers have already been achieved for this technique. More generally, electronic properties of mesoscopic artificial structures, spatially resolved surface chemical reactions, epitaxial growth mechanisms, inhomogeneities at semiconductor interfaces, proximity effects in ceramic superconductors, composite materials, interface formation in fragile materials, and the chemical role of trace elements in biological systems represent some of the general topic areas that spectromicroscopy can fruitfully address.

2.2.3 Circular Polarization

Every technical advance in the utilization of synchrotron radiation has given rise to new opportunities in materials and surface science. One dimension that is just beginning to be exploited in the US. is the use of circularly polarized photons. Radiation from bend-magnet sources is linearly polarized in the plane of the orbiting electrons. Out of this plane, the radiation is elliptically polarized, becoming circularly polarized as the angle out of the plane increases. Although the flux is limited, scientists are successfully exploiting the natural circular polarization of bend-magnet radiation and turning it into a sophisticated new tool for probing the secrets of matter. The extra degree of freedom associated with circular polarization lends a precision and specificity to photon-based techniques that is otherwise lacking. For example, turning transitions on and off by varying the polarization is a powerful means of ascertaining state or band symmetry. Consequently, the use of circularly polarized synchrotron radiation is now at the cutting edge of research on properties that are dependent on electron spin, particularly the magnetic properties of solids and thin films, a subject not only of academic interest to solid-state physicists and materials scientists but of considerable economic importance to the magnetic recording industry.

Spin-dependence is at the core of understanding magnetism on a microscopic scale. For magnetic materials, the opportunities range from very basic questions concerning theories of finite-temperature itinerant magnetism and surface critical phenomena, to applications-oriented areas associated with film growth and the properties of magnetic memory and recording devices. Magnetic and magneto-optical recording are the primary technologies underlying data storage in the computer industry with a world-wide annual revenue of about 50 billion dollars. It is expected that these technologies will remain dominant over the next decade. However, the rapid increase in storage density experienced over the last 20 years can only continue if new materials are developed, possibly taking advantage of new phenomena exhibited by these materials.

Circularly polarized x-rays are a promising new tool for studying candidate materials for computer data storage. Magnetic circular x-ray dichroism (MCXD) spectroscopy is a comparatively new technique, having been originally developed in Germany during the last decade for the investigation of complex magnetic materials. Dichroism refers to the difference between measurements made with right and left circularly polarized radiation. Measurement of the differential absorption makes this kind of spectroscopy into an element-specific magnetic probe in which it becomes possible to investigate the magnetic properties of complex systems, element by element. MCXD experiments have already shown that normally non-magnetic platinum and palladium become magnetic in cobalt/platinum and cobalt/palladium multilayers. Moreover, spatially resolved MCXD spectroscopy makes it possible to image magnetic materials with spin orientation as the contrast mechanism. This new technique already shows immense promise as a tool, not only for understanding magnetic materials, but for investigating them in the real-world environment of, for example, a magnetic recording

disk covered with carbon and polymer protective coatings. The first such magnetic imaging experiments have shown that it is possible to image individual bits on a disk.

Recently, several undulator and wiggler sources have been proposed that will increase the flux of circularly polarized photons and offer the possibility of rapidly modulating the polarization between right- and left-handed polarization states. Here the ALS will make a crucial contribution, especially when the spin polarization of photoemitted electrons is one of the variables to be measured. The spin polarization is due to the exchange interaction in magnetic materials and to the spin-orbit interaction in nonmagnetic materials. In the most demanding angle- and spin-resolved experiments, high resolution is required simultaneously for energy, electron momentum (angle), and spin polarization. The high brightness and flux of the ALS undulators will be necessary to and fully exploited by these experiments.

Applications of spin-polarized photons extend far beyond magnetic materials and range from mapping the band structure of solids by angle-resolved photoemission to determining the structure of chiral biological molecules by differential scattering. The folding of chromatin is an example of a crucial problem whose exploration will benefit from the use of circularly polarized photons. The static and dynamic electronic properties of molecules, including novel systems, such as self-assembled monolayers on surfaces and organic superconductors, can also be investigated by means of natural and magnetic circular dichroism. Selective photochemistry with circularly polarized photons is still another possibility, as in the enhancement of a specific dissociation pathway in a photolytic deposition process.

2.2.4 Dynamical Phenomena in Solids

Time resolution is a feature of all synchrotron sources that follows from the bunched character of the stored electron or positron beam. In the normal multibunch operating mode of the ALS, the pulses will be about 30 ps wide and will come at intervals of 2 ns. It will also be possible to operate in a few bunch mode with pulse separations up to 0.6 μs. Time resolution can be achieved with the ALS alone or with the ALS operating in synchrony with other light sources, such as a high-speed laser in a pump-probe mode. Achieving such a temporal resolution represent a second new dimension in experimental studies of solid materials. An outstanding challenge is to do real-time measurements of dynamical phenomena, particularly those that appear as time-dependent features in various core-level and valence-band spectra. The high flux and brightness of the radiation from ALS undulators and its sharp time structure will make it possible to observe effects in core-level spectra, such as photoemission and Auger-electron emission, that occur within picoseconds after excitation by the undulator pump beam because of the rapid relaxation of the environment surrounding the core hole following excitation by a soft x-ray or ultraviolet pulse. In the past, the ability to measure time-dependent spectra has been severely hampered by the absence of facilities with the required time-resolved capabilities in this energy range. Equally important is the capability to probe the resultant excited state with a synchronized, short pulse of delayed tunable synchrotron radiation.

In this way, the pump-probe technique that is well established in laser spectroscopy in the visible and infrared can be extended to the soft x-ray and ultraviolet spectral regions.

Heretofore-impossible dynamical experiments in solids, including semiconductors and semiconductor heterostructures, insulators, magnetic materials and thin films, and novel materials systems, such as molecular solids, become feasible. For example, pump-probe photoemission provides a unique means of mapping in detail the conduction-band states in the wide-gap semiconductors or insulators that are candidates for photonic devices. Charge-carrier dynamics due to phonon, impurity, and alloy scattering in quantum heterostructures will be similarly susceptible to pump-probe studies. Time-resolved studies of spin dynamics, both intra-atomic and long-range, such as the time-scale for energy transfer between phonon and spin degrees of freedom, constitute a frontier area of magnetic-materials research, particularly for thin films, and relates to the fundamental limits of magnetic recording processes and the feasibility of novel information-storage techniques..

Surfaces and interfaces represent still another challenge for time-resolved measurements of dynamical phenomena. Surface processes can be induced and interfacial dynamics explored in order to understand basic bond-breaking, bond-making, and energy-transfer processes on surfaces. Specifically, the high flux of the ALS will play an important role in photolysis by generating sufficient reaction products (either new adsorbed species or desorbed gases,) for examination by time-resolved surface analytical techniques. Photolytic etching and chemical vapor deposition represent technological opportunities that will greatly benefit from the extension of present laser-based techniques to those using shorter wavelength, tunable, synchrotron radiation.

2.2.5 Chemical Reaction Dynamics

Time-resolved applications of the new source are also anticipated in the area of chemical reaction dynamics, which encompasses all phenomena in which molecules undergo energetic or chemical transformations. The chemical behavior of highly reactive, severely strained, or unstable molecular species and molecules in excited electronic and vibrational states underlies important processes, such as the combustion of fossil fuels and the manufacture of high-tech materials, that have tremendous economic and environmental implications. The high flux and high brightness of the ALS provide for concerted experimental investigations of these important chemical species at the molecular level. The challenging areas of research that will become accessible include: the chemical reactivity, structure, and spectroscopy of polyatomic radicals, reactive intermediates, clusters, and unusual transient species; details of the mechanisms of elementary chemical reactions and of primary dissociation processes of aromatic molecules; the nature of molecular energy flow; and bond-selective, mode-selective, or regio-selective means of modifying and manipulating chemical reactivity. These will be studied under collision-free conditions, single-collision situations, or at the vacuum-surface interface.

ALS undulator radiation, when used as a photoanalysis source, can produce macroscopic quantities of VUV photoproducts. This effect will permit experiments to study the primary dissociation of polyatomic molecules. For example, the dissociation dynamics of CH_2=CH-C≡CH will reveal the important mechanisms of addition reactions involving two acetylenes. The kinetics of complicated combustion-related reactions can be unraveled when specific free-radical products are selectively ionized by the tunable ALS undulator radiation. The ALS will extend the possibilities of bond-selective chemistry in the UV. In the photodissociation of CH_2IBr, for example, it has been shown that it is possible to dissociate selectively the stronger C-Br bond and keep the weaker C-I bond intact by exciting the nonbonding electrons of bromine to an antibonding orbital of the C-Br bond.

When the ALS is operated in the eight-bunch mode, the expected photon pulse width will be 50 ps. An unprecedented resolution of 1 meV over the entire energy range from the ionization potential to 30 eV can be obtained in threshold photoelectron spectroscopy. Spectra of this resolution will reveal new structure for nearly all species investigated. The use of a cold molecular beam and the excellent electron-energy resolution make possible the study of dissociation reactions of metastable ions and of reactions between ions and molecules. The fifty-fold increase in internal-energy resolution provided by the ALS will certainly reveal new information about these complex reactions.

The study of clusters and free radicals is one of the most active areas in modern chemical physics. Carbonaceous clusters are important direct players in combustion processes such as soot formation and coal combustion, but an understanding of their structure, thermochemistry, and reactivity remains to be achieved. Metallic clusters, on the other hand, play important roles in catalysis, have practical applications in catalytic converters, and have unique and unexplained reactive and electronic properties. Reactive free radicals are often the active species controlling complex chemical reaction networks, yet they are the most difficult to understand because of the difficulty of making them in quantity. ALS UV radiation, is uniquely suited to study the vibrational and electronic spectroscopy of these species, to measure ionization potentials, to determine bond energies, and to determine the lowest-energy pathways in fragmentation of the species.

2.2.6 Atomic and Molecular Physics

In atomic and molecular physics, the brightness of the new source will permit spectroscopists to measure effects in very dilute gas sources. An atom or molecule is held together in the balance between the attraction of the nucleus for the electrons and the mutual repulsion of the electrons for one another. This equilibrium is delicate, and the effects of correlation (i.e., the mutual interaction of the electrons) can be dramatic, giving rise to complex satellite spectra in photoemission, for example, and thereby providing a stringent test of new theoretical techniques. Studies of free atoms and molecules will emphasize electron-electron and electron-vibrational correlation effects and coincidence measurements (including angular correlations) between various fragment particles, for

example, between photoelectron-Auger electron or electronic-ionic fragment pairs. In these studies of highly tenuous targets, the high brightness, high resolution, and polarization of the photon beam will be crucial. Novel and extremely detailed work will not only include noble gases, but also can be extended to encompass high-temperature atomic and molecular targets and chemically important transient species.

Relativistic, quantum-electrodynamic, and correlation effects will be readily measurable. Also, the properties of open-shell atoms, atoms in excited states, and highly stripped ions can be studied. These are systems that occur in astrophysical and plasma environments and that may someday serve in x-ray laser schemes. Some of these experiments will involve combinations of the synchrotron source with tunable lasers and with heavy-ion beams, storage rings, or traps. The vibrational structure of molecules will become resolvable, even for core levels. It will become possible to study the dynamics of energetic processes in atomic inner shells, including resonances that occur on a uniquely fast time scale. The short-time (pulse) structure of synchrotron radiation can be used for ultra-high-resolution time-of-flight spectroscopy. A recent example is the study of double ionization of He, in which one-step and two-step processes in ionization were investigated. Studies of the ionization of neutral species to fully understand shake-up, shake-off, and other electron correlation effects are planned at the ALS.

The polarization of synchrotron radiation is a powerful property whose use can give detailed insight into atomic processes. Undulator radiation is essentially 100% linearly polarized and can be used with angle-resolved spectroscopy to determine accurately the asymmetry parameter of emitted photoelectrons or, in the case of an aligned target, the matrix elements describing the emitted photoelectrons. These techniques provide a very stringent test of theoretical models. In addition, the high intensity of the light from the ALS will allow experimenters to measure spin polarization of the photoelectrons—the third crucial quantity in the photoelectric effect (in addition to energy and angle). Thus, the degeneracy between the two spin components will be lifted, permitting the complete determination of all transition amplitudes and leading to direct measurements of relativistic interactions in atoms.

The brightness of the ALS will permit measurements on tiny samples of rare materials, such as the radioactive actinides, whose properties have largely eluded determination in the past, because the materials were available only in quantities insufficient for study by traditional means.

2.3 BASELINE PROJECT SUMMARY

State-of-the-art experimental facilities for providing light to researchers at the ALS are the central elements of this project in addition to the approximately 20,200 gross square feet of finished light laboratory and office space for ALS users in the second floor of the ALS building. As discussed in Chapter 1, the final choice of the insertion devices and beamlines to be constructed will depend on the identified needs of the user community—needs that will be brought into focus, in parallel with evolving research priorities, before

construction on the project begins. Nonetheless, a baseline complement was established to serve as the basis for the conceptual design, the estimation of costs, and the definition of a schedule. This baseline complement of apparatus and equipment comprises

- An 8-cm-period undulator and one undulator and one bend-magnet beamline for two-photon studies of the dynamical phenomena in materials in the photon-energy range from 20 eV to 300 eV
- A 10-cm-period undulator and one beamline for chemical reaction dynamics in the photon-energy range from 5 to 50 eV
- A 3.65-cm-period undulator and a beamline (including microscope) for soft x-ray microscopy of materials and surfaces in the photon-energy range from 175 to 1650 eV
- A crossed-field undulator to provide radiation with controlled circular polarization and one beamline for the investigation of materials and biological systems in the photon-energy range from 20 eV to 300 eV
- A 16-cm-period wiggler and one beamline with two branches for materials science and atomic physics at photon energies from 65 to 1500 eV and 1 to 10 keV, respectively

3.
INSERTION DEVICES

The initial complement of experimental facilities for the ALS included two undulators with a 5-cm period and one with an 8-cm period. Accordingly, a conceptual design for undulator U5.0 was prepared in 1989 [*U5.0 Undulator Conceptual Design Report*, 1989; see also Hoyer et al., 1991, and references therein] and for undulator U8.0 in 1990 [ALS Insertion Device Design Group, 1990]. Fabrication and testing of these three undulators are completed The two U5.0 devices have been installed and are now in operation. The scope of experimental facilities for the project described here includes undulators with 3.65-, 8.0- and 10.0-cm periods, a crossed-field device comprising two 8.0-cm undulator sections separated by a variable-field magnet, and a wiggler with a 16-cm period. The design of all ALS-constructed insertion devices contains many generic features. In particular, undulators U3.65 and U10.0 closely resemble undulator U8.0, which is described in detail in this report. Likewise, the crossed-field undulator UX contains many elements common to all ALS undulators, as does wiggler W16.0.

3.1 INSERTION-DEVICE CHARACTERISTICS

The properties that make synchrotron radiation generated by insertion devices so special can be understood by again considering Fig. 3-1. The case of an undulator is especially instructive. The oscillation of relativistic electrons as they pass through an undulator causes radiation to be generated in narrow spectral lines and with minimal divergence, approaching limits set by the small but finite wavelength of the radiation (the so-called diffraction limit). It is important that the very thin, pencillike beam of fast electrons be tightly controlled in phase space, that is, that the *emittance* be as small as possible. If it is not, the synchrotron radiation will not have the desired small divergence and spatial coherence.

The extent of the resulting electron deflection in a wiggler or undulator is characterized by the dimensionless parameter

$$K = 0.934\, B_0 \lambda_u \ , \qquad (3\text{-}1)$$

where B_0 is the peak magnetic field (in T) and λ_u is the spatial period (in cm) of the magnetic field. An undulator is characterized by a low value of K (≈ 1). Because of the interference of radiation from different periods, undulator radiation is spectrally compressed into a series of narrow peaks (see Fig. 3-1) at harmonics of the fundamental energy, given by

$$\varepsilon_1 \approx \frac{0.95\ E^2[\mathrm{GeV}]}{\lambda_u\,[\mathrm{cm}]\left(1+\frac{K^2}{2}\right)}\ , \tag{3-2}$$

where E is the electron energy. The fundamental is a peak whose width ($\Delta\lambda/\lambda$) is of order $1/N$, where N is the number of undulator periods; the harmonics are sharper still. The fundamental wavelength depends on the magnet gap and can be tuned over a certain range by physically varying the gap between the upper and lower halves of the undulator. Higher photon energies are generally obtained by using a shorter period length; however, there is a lower limit to the practical period length of an undulator, because the magnetic field decreases rapidly as the ratio of the period length to the magnet gap becomes small.

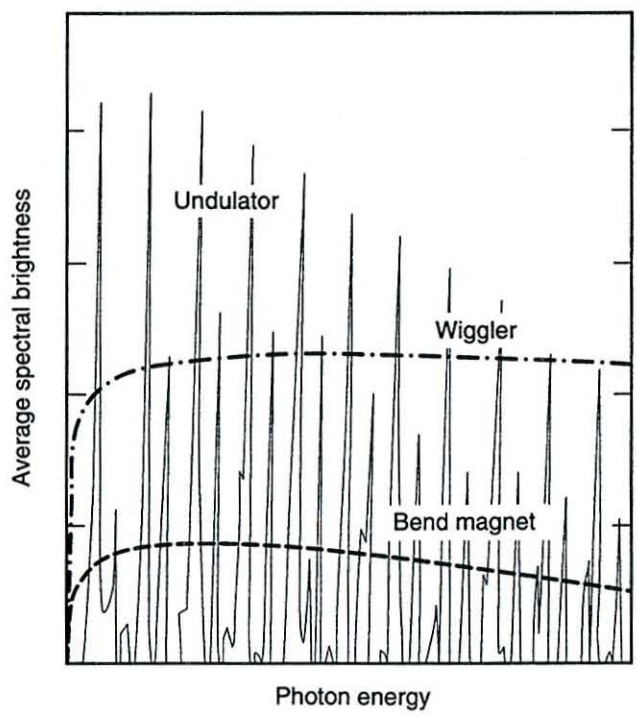

Figure 3-1. Plot showing spectra of synchrotron radiation from a bend magnet, a wiggler, and an undulator. The harmonic content of undulator radiation arises from interference of radiation from different periods.

Undulator U3.65 with a period length of 3.65 cm is the shortest-period insertion device now being considered for the ALS.

For the ALS undulators, we anticipate that the first, third, and fifth harmonics will provide useful output. Harmonics of higher order are also present, and though more sensitive to undulator construction errors, they may provide substantial fluxes of higher-energy photons in the same beam—potentially a very valuable asset. This point is important, because beamline optical systems are generally designed to handle wider energy ranges than can be covered with the fundamental radiation of an undulator. The useful operating range of an ALS undulator is considered to lie, roughly, between the energy of the fundamental at the largest achievable K value and the energy of the fifth harmonic at $K = 0.5$.

For each electron, the most useful radiation at the fundamental wavelength lies in a narrow cone about the axis of the system, with an rms half-angle equal to $(\lambda/L)^{1/2}$, where λ is the wavelength of the fundamental and L is the length of the undulator. If the electron-beam emittance is sufficiently small, the radiation in the vacuum ultraviolet and soft x-ray regions appears to emanate from a source of almost diffraction-limited size. As a result, in this spectral region, undulators can provide radiation of unparalleled spectral brightness [see Eq. (2-3)], with a significant degree of spatial coherence.

For experiments at the ALS requiring x-rays with energies above 1 keV, a wiggler is needed, rather than an undulator. A wiggler produces a broadly peaked (or "white") spectrum of harder x-rays, which is spread into a relatively wide fan of radiation emerging from the insertion device. For wigglers, which are characterized by large K of 10 or greater, higher harmonics dominate. Moreover, spectral peaks at very high harmonics tend to smooth out owing to the blurring effects of the electron-beam emittance and energy spread, thus producing a smooth spectrum. Wigglers can therefore be regarded simply as a sequence of bend magnets of alternating polarity. The radiation from the alternating bending sections adds incoherently, giving rise to a $2N$-fold increase in the radiation intensity (compared with a single bend magnet), where N is the number of magnet periods. Wigglers are often characterized by an on-axis critical energy

$$\varepsilon_c = 0.665\ E^2\ [\mathrm{GeV}]\ B_0\ [\mathrm{T}]\ , \tag{3-3}$$

where E is the electron energy.

3.2 UNDULATOR U8.0

Far more design detail for undulator U8.0 is available in the conceptual design report than is presented here, and the following paragraphs set out only the salient points of the design, including brief discussions of the magnetic structure, the design of the support and drive system, the configuration of the control system, and the design of the vacuum system. Performance data are summarized in Figs. 3-2 and 3-3 and in Table 3-1a.

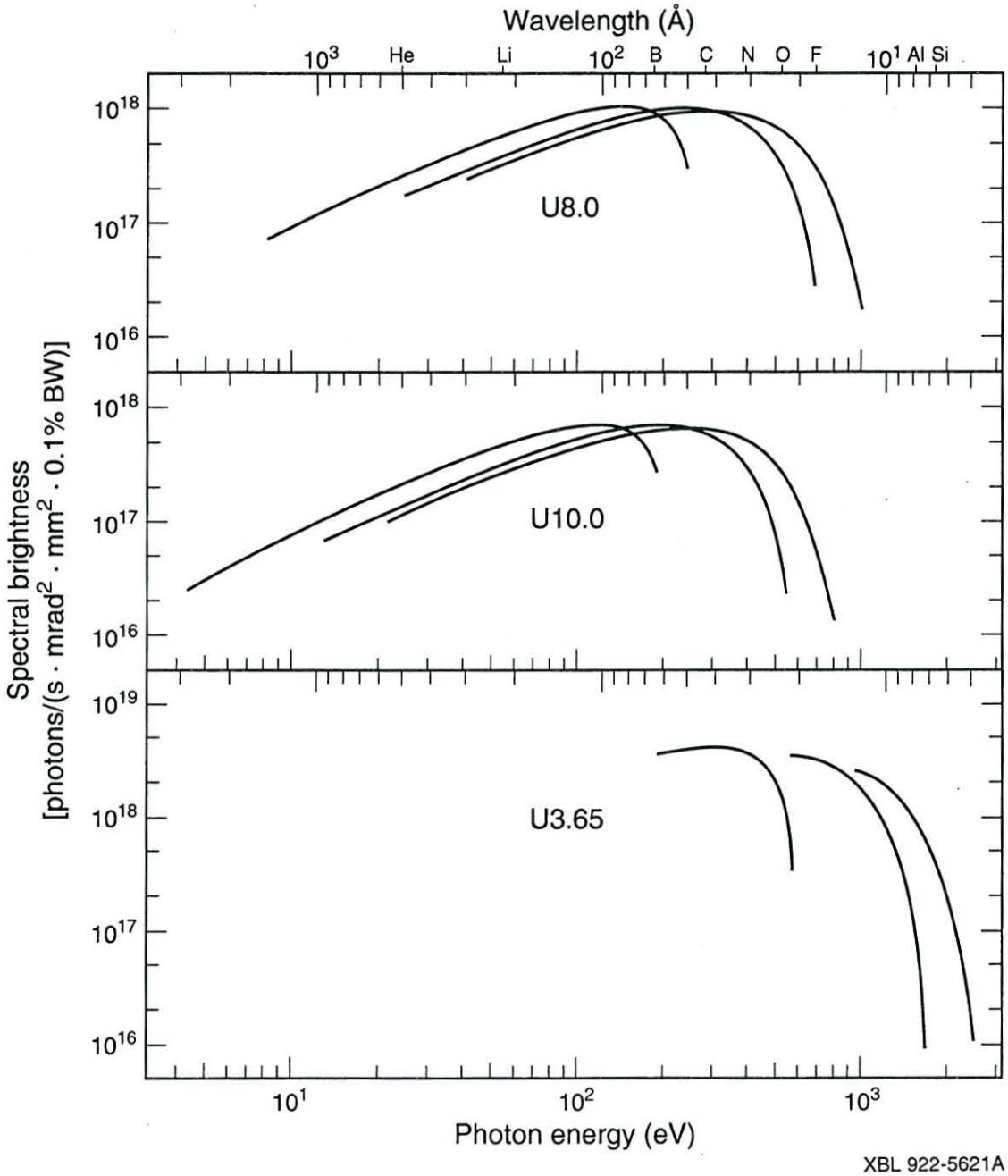

Figure 3-2. Spectral brightness as a function of photon energy for the U3.65, U8.0, and U10.0 undulators described in this chapter; specifications appear in Table 3-1. Each undulator curve is the locus of narrow peaks of radiation, tuned by altering the undulator gaps. Separate curves are shown for the first, third, and fifth harmonics of each undulator.

The U8.0 device has 55 periods, each of length 8.0 cm, and a total length of 4.6 meters. By using the third and fifth harmonics, as well as the fundamental, the spectral range 12–2100 Å (6–1000 eV) can be covered. To reach the lowest energy in this range requires an effective field B_{eff} of 1.3 T at the minimum gap. Error tolerances must be

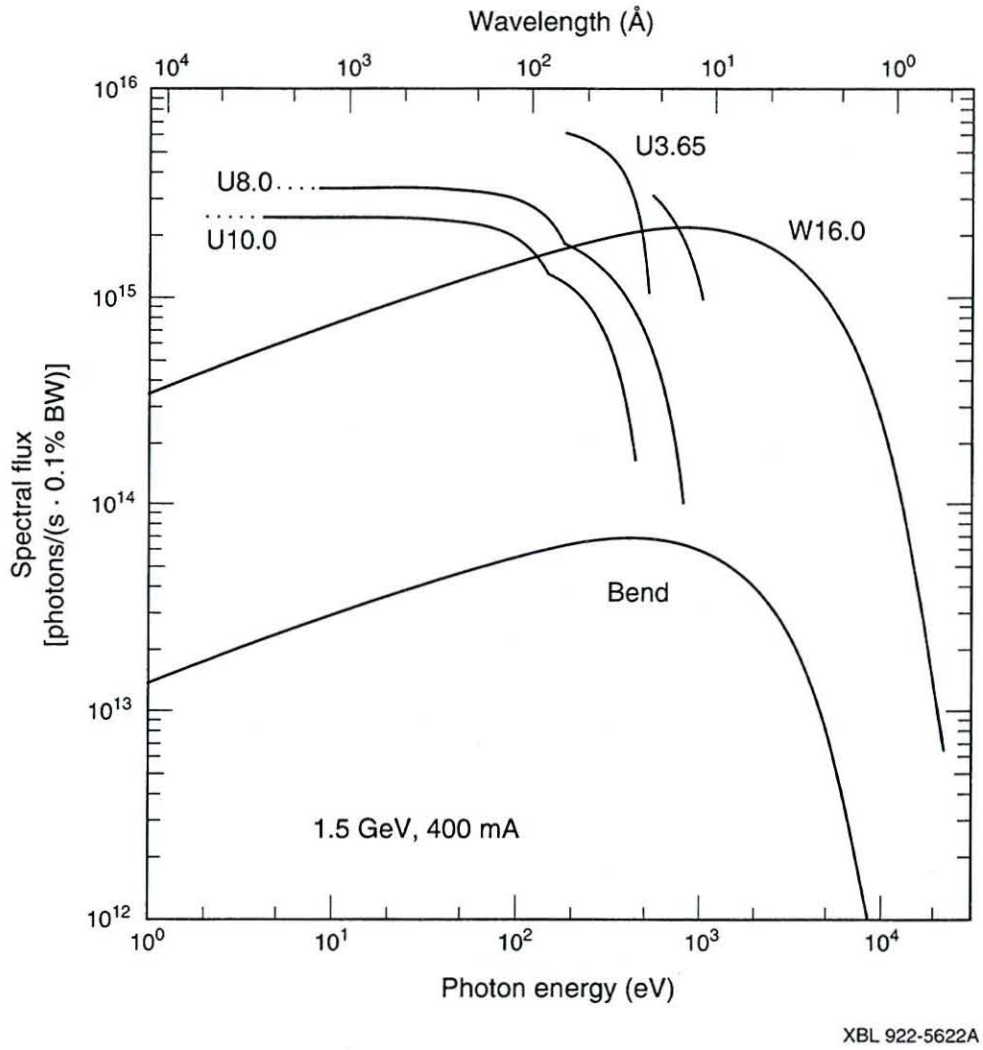

Figure 3-3. Spectral flux as a function of photon energy for the U3.65, U8.0, and U10.0 undulators and the W16.0 wiggler described in this chapter, as well as for the ALS bend magnets.

carefully specified to ensure high brightness in the first three odd harmonics. Major parameters and tolerances for U8.0 are given in Tables 3-2 and 3-3; these values were established to fully exploit the potential of the ALS. Tolerances were set by calculating the effects of errors on spectral performance.

The U8.0 undulator is shown in Figs. 3-4 and 3-5. The major subsystems are (i) the magnetic structure itself, which includes the hybrid pole assemblies mounted on pole mounts that are attached to the 4.5-meter-long backing beams; (ii) the support and drive system, which includes the framework for supporting the magnetic structure and the mechanism for opening and closing the magnetic gap; and (iii) the vacuum system, which includes a 5.1-meter-long vacuum chamber and its associated pumping system. Figure 3-4 reflects a philosophy in which the major components of all insertion devices share similar designs for reduced engineering and fabrication costs and simplified maintenance.

Table 3-1 (following pages). Detailed performance characteristics of (a) undulator U8.0, (b) undulator U10.0, (c) undulator U3.65, and (d) wiggler W16.0, operating at an electron energy of 1.5 GeV. For the undulators, characteristics are given for the fundamental and for the third and fifth harmonics, for several values of K. The symbols used are explained below.

B0 (T)	Peak magnetic field for undulators and wigglers.
BRI	Spectral brightness, i.e., flux per unit phase space area [photons/(s·mm^2·mrad^2·0.1% bandwidth)].
E (GeV)	Beam energy.
ECR (keV)	Critical energy for wigglers and bend magnets.
EP (keV)	Photon energy.
F	Spectral flux. For undulators the flux in the central cone; for wigglers and bend magnets, the flux within a 5-mrad horizontal angle and all vertical angles [photons/(s·0.1% bandwidth)].
FDEN1	Spectral flux per unit horizontal angle [photons/(s·mrad·0.1% bandwidth)].
FDEN2	Spectral flux per unit solid angle [photons/(s·mrad^2·0.1% bandwidth)].
I (A)	Beam current.
K	Peak deflection parameter for undulators.
LAMBW (cm)	Period length of undulators and wigglers.
N	Number of magnet periods (undulators and wigglers).
n	Harmonic number for undulator radiation.
NPOLE	Number of wiggler poles.
PCEN (W)	Power transmitted through a pinhole whose angular size is equal to that of the central angular cone at the fundamental frequency.
PDEN1	Power emitted (at all frequencies) per unit horizontal angle [W/mrad].
PDEN2	Power emitted (at all frequencies) per unit solid angle [W/mrad^2].
PTOT (kW)	Total power (all angles and all frequencies) emitted by undulators and wigglers.
RHO (m)	Radius of curvature of electron beam in a bend magnet.
SIGPX (mrad)	Horizontal rms beam divergence in the straight section.
SIGPY (mrad)	Vertical rms beam divergence in the straight section.
SIGX (mm)	Horizontal rms beam size in the straight section.
SIGY (mm)	Vertical rms beam size in the straight section.
XLEN (m)	Length of undulators and wigglers.

Table 3-1a. Undulator U8.0.

E(GeV)	I(Amp)	SIGX(mm)	SIGY(mm)	SIGPX(mr)	SIGPY(mr)	N	LAMBDW(cm)	XLEN(m)
1.50	0.400	0.330	0.063	0.030	0.016	61	8.00	4.5

****

K	B0(T)	PTOT(kW)	PDEN2(W/(mr**2))	PCEN(W)
0.07	0.01	2.73E–04	2.22E+00	2.09E–02

n	EP(keV)	F(#/s·0.1%BW)	FDEN2	BRI
1	2.66E–01	1.90E+13	2.01E+15	1.51E+16
3	7.99E–01	2.39E+08	4.53E+09	3.44E+11
5	1.33E+00	3.23E+03	7.31E+05	5.57E+06

.....

K	B0(T)	PTOT(kW)	PDEN2(W/(mr**2))	PCEN(W)
0.50	0.07	1.24E–02	7.21E+01	7.33E–01

n	EP(keV)	F(#/s·0.1%BW)	FDEN2	BRI
1	2.37E–01	7.32E+14	7.16E+16	5.37E+17
3	7.12E–01	1.47E+13	2.66E+15	2.02E+16
5	1.19E+00	3.24E+11	7.08E+13	5.40E+14

.....

K	B0(T)	PTOT(kW)	PDEN2(W/(mr**2))	PCEN(W)
1.20	0.16	7.17E–02	2.06E+02	2.84E+00

n	EP(keV)	F(#/s·0.1%BW)	FDEN2	BRI
1	1.55E–01	2.29E+15	1.65E+17	1.23E+18
3	4.66E–01	5.53E+14	8.12E+16	6.15E+17
5	7.76E–01	1.54E+14	2.87E+16	2.18E+17

.....

K	B0(T)	PTOT(kW)	PDEN2(W/(mr**2))	PCEN(W)
7.80	1.04	3.03E+00	1.40E+03	2.67E+02

n	EP(keV)	F(#/s·0.1%BW)	FDEN2	BRI
1	8.50E–03	3.38E+15	1.75E+16	9.01E+16
3	2.55E–02	2.22E+15	3.32E+17	2.15E+17
5	4.25E–02	1.83E+15	4.41E+17	3.03E+17

.....

Table 3-1b. Undulator U10.0.

E(GeV)	I(Amp)	SIGX(mm)	SIGY(mm)	SIGPX(mr)	SIGPY(mr)	N	LAMBDW(cm)	XLEN(m)
1.50	0.400	0.330	0.063	0.030	0.016	45	10.00	4.5

****

K	B0(T)	PTOT(KW)	PDEN2(W/(mr**2))	PCEN(W)
0.09	0.01	2.56E-04	2.08E+00	2.41E-02

n	EP(keV)	F(#/s,0.1%BW)	FDEN2	BRI
1	2.13E-01	2.23E+13	1.93E+15	1.43E+16
3	6.38E-01	7.10E+08	1.18E+11	8.90E+11
5	1.06E+00	2.42E+04	4.99E+06	3.77E+07

.....

K	B0(T)	PTOT(KW)	PDEN2(W/(mr**2))	PCEN(W)
2.52	0.27	1.87E-01	2.63E+02	9.85E+00

n	EP(keV)	F(#/s,0.1%BW)	FDEN2	BRI
1	5.12E-02	2.37E+15	6.33E+16	4.42E+17
3	1.54E-01	1.33E+15	9.02E+16	6.65E+17
5	2.56E-01	9.19E+14	9.01E+16	6.72E+17

.....

K	B0(T)	PTOT(KW)	PDEN2(W/(mr**2))	PCEN(W)
4.95	0.53	7.19E-01	5.52E+02	5.78E+01

n	EP(keV)	F(#/s,0.1%BW)	FDEN2	BRI
1	1.62E-02	2.48E+15	2.24E+16	1.35E+17
3	4.84E-02	1.61E+15	4.09E+16	2.84E+17
5	8.08E-02	1.30E+15	5.21E+16	3.75E+17

.....

K	B0(T)	PTOT(KW)	PDEN2(W/(mr**2))	PCEN(W)
7.37	0.79	1.60E+00	7.79E+02	1.81E+02

n	EP(keV)	F(#/s,0.1%BW)	FDEN2	BRI
1	7.58E-03	2.49E+15	1.08E+16	5.43E+16
3	2.28E-02	1.63E+15	2.05E+16	1.31E+17
5	3.79E-02	1.34E+15	2.73E+16	1.86E+17

.....

K	B0(T)	PTOT(KW)	PDEN2(W/(mr**2))	PCEN(W)
9.80	1.05	2.82E+00	1.04E+03	4.15E+02

n	EP(keV)	F(#/s,0.1%BW)	FDEN2	BRI
1	4.36E-03	2.50E+15	6.23E+15	2.62E+16
3	1.31E-02	1.64E+15	1.20E+16	6.98E+16
5	2.18E-02	1.35E+15	1.63E+16	1.03E+17

.....

Table 3-1c. Undulator U3.65.

E(GeV)	I(Amp)	SIGX(mm)	SIGY(mm)	SIGPX(mr)	SIGPY(mr)	N	LAMBDW(cm)	XLEN(m)
1.50	0.400	0.330	0.063	0.030	0.016	123	3.65	4.5

****

K	B0(T)	PTOT(kW)	PDEN2(W/(mr**2))	PCEN(W)
0.2	0.059	8.80E-03	6.77E+01	4.29E-01

n	EP(keV)	F(#/s·0.1%BW)	FDEN2	BRI
1	5.74E–01	2.73E+14	4.32E+16	3.25E+17
3	1.72E+00	1.76E+11	4.24E+13	3.21E+14
5	2.87E+00	1.22E+08	3.30E+10	2.50E+11

K	B0(T)	PTOT(kW)	PDEN2(W/(mr**2))	PCEN(W)
0.66	0.194	9.62E-02	4.64E+02	3.23E+00

n	EP(keV)	F(#/s·0.1%BW)	FDEN2	BRI
1	4.81E–01	2.30E+15	3.30E+17	2.48E+18
3	1.44E+00	1.17E+14	2.67E+16	2.02E+17
5	2.40E+00	6.61E+12	1.72E+15	1.30E+16

K	B0(T)	PTOT(kW)	PDEN2(W/(mr**2))	PCEN(W)
1.12	0.329	2.77E-01	8.49E+02	6.98E+00

n	EP(keV)	F(#/s·0.1%BW)	FDEN2	BRI
1	3.59E–01	4.35E+15	5.30E+17	3.97E+18
3	1.08E+00	9.17E+14	1.90E+17	1.44E+18
5	1.80E+00	2.21E+14	5.37E+16	4.07E+17

K	B0(T)	PTOT(kW)	PDEN2(W/(mr**2))	PCEN(W)
1.58	0.465	5.52E-01	1.22E+03	1.23E+01

n	EP(keV)	F(#/s·0.1%BW)	FDEN2	BRI
1	2.60E–01	5.57E+15	5.51E+17	4.11E+18
3	7.79E–01	2.11E+15	3.85E+17	2.90E+18
5	1.30E+00	9.47E+14	2.09E+17	1.58E+18

K	B0(T)	PTOT(kW)	PDEN2(W/(mr**2))	PCEN(W)
2.04	0.600	9.20E-01	1.59E+03	2.01E+01

n	EP(keV)	F(#/s·0.1%BW)	FDEN2	BRI
1	1.90E–01	6.17E+15	4.88E+17	3.62E+18
3	5.68E–01	3.05E+15	4.79E+17	3.61E+18
5	9.47E–01	1.82E+15	3.601E+17	2.71E+18

Table 3-1d. Wiggler W16.0.

E(GeV)	I(amp)	SIGX(mm)	SIGY(mm)	SIGPX(mr)	SIGPY(mr)
1.50	0.400	0.330	0.063	0.030	0.016

NPOLE	LAMBW(cm)	XLEN(m)	B0(T)	ECR(keV)	PTOT(kW)	PDEN2(W/(mr**2))
33	16.0	2.91	2.07	3.10	5.31E+00	7.27E+02

EP(keV)	F	FDEN1	FDEN2	BRI
5.000E–03	5.878E+14	1.176E+14	1.529E+13	9.123E+13
1.000E–02	7.355E+14	1.471E+14	2.426E+13	1.448E+14
5.000E–02	1.212E+15	2.425E+14	7.070E+13	4.219E+14
1.000E–01	1.477E+15	2.953E+14	1.116E+14	6.660E+14
5.000E–01	2.083E+15	4.166E+14	3.060E+14	1.825E+15
1.000E+00	2.161E+15	4.321E+14	4.384E+14	2.614E+15
3.098E+00*	1.537E+15	3.073E+14	5.551E+14	3.305E+15
5.000E+00	9.720E+14	1.944E+14	4.541E+14	2.699E+15
1.000E+01	2.482E+14	4.963E+13	1.688E+14	9.986E+14
2.000E+01	1.298E+13	2.597E+12	1.282E+13	7.508E+13
5.000E+01	1.218E+09	2.437E+08	1.935E+09	1.102E+10
1.000E+02	1.890E+02	3.780E+01	3.828E+02	2.120E+03

*This is the critical energy.

Table 3-2. Engineering design parameters for undulator U8.0.

Max. peak field at 1.4-cm magnetic gap (T)	1.32
Effective peak field at 1.4-cm magnetic gap (T)	1.20
Period length (cm)	8.0
Number of periods	55
Number of full-field poles	111
Entrance sequence	0, –1/2, +1, –1
Overall length (cm)	457.3
Pole width (cm)	8
Pole height (cm)	6
Pole thickness (cm)	1.28
Number of blocks per half-period, one side of pole	6
End correction range, B_y (G·cm)	3,400
End correction range, B_x (G·cm)	0
Steering coils, short	~5 λ long
Dipole trim coils, long	To 5 m
Steering and trim field strength (G)	±5

Table 3-3. Engineering design tolerances for undulator U8.0.

Error type	Total tolerance	Error (%)
Spacing, CSEM to pole	100 μm	0.04
Pole thickness	50 μm	0.01
Vertical pole motion (gap)	30 μm	0.04
Pole width	100 μm	0.04
Easy-axis orientation	±3.0°	0.19
	Total:	0.20

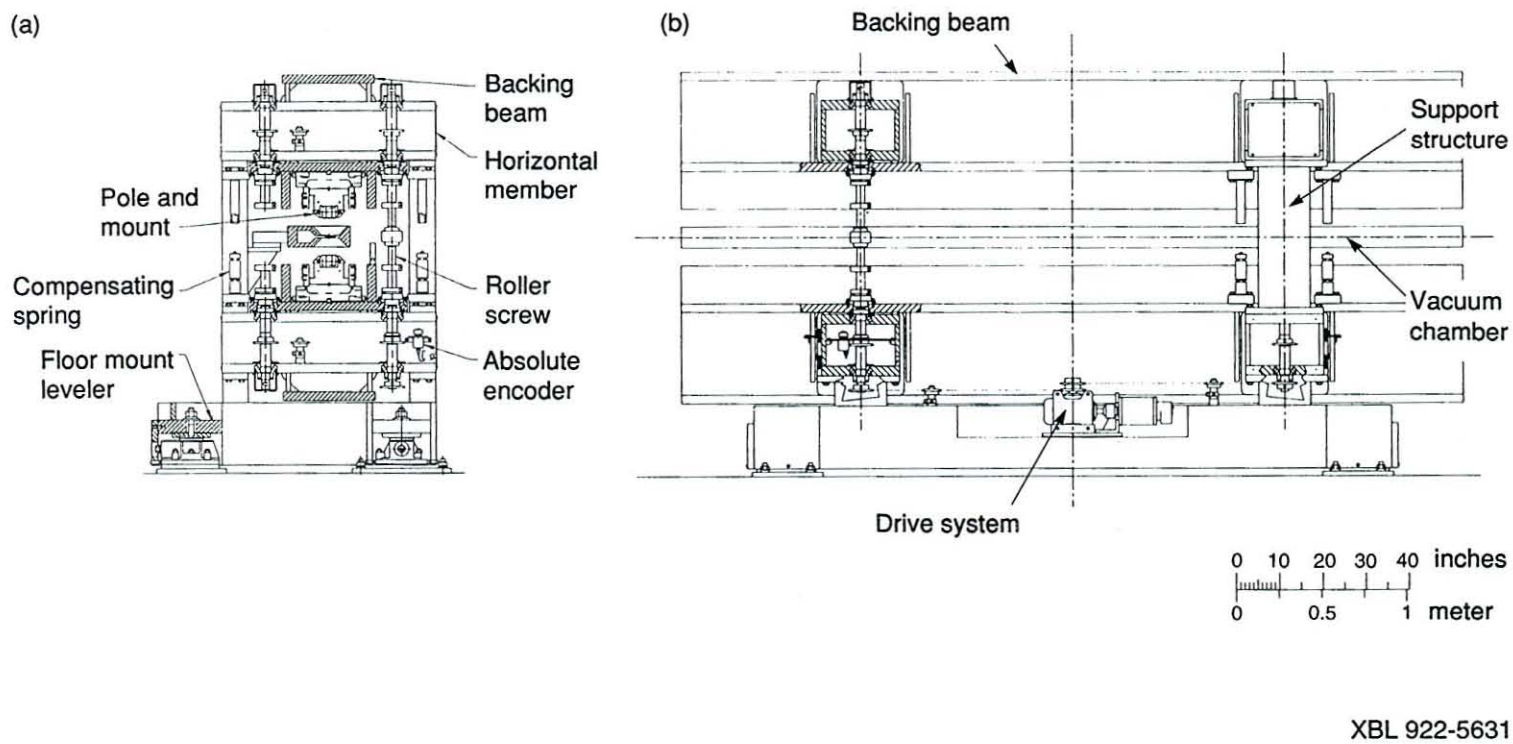

Figure 3-4. (a) End view of undulator U8.0, installed in its support and drive structure; (b) elevation view of the support and drive system.

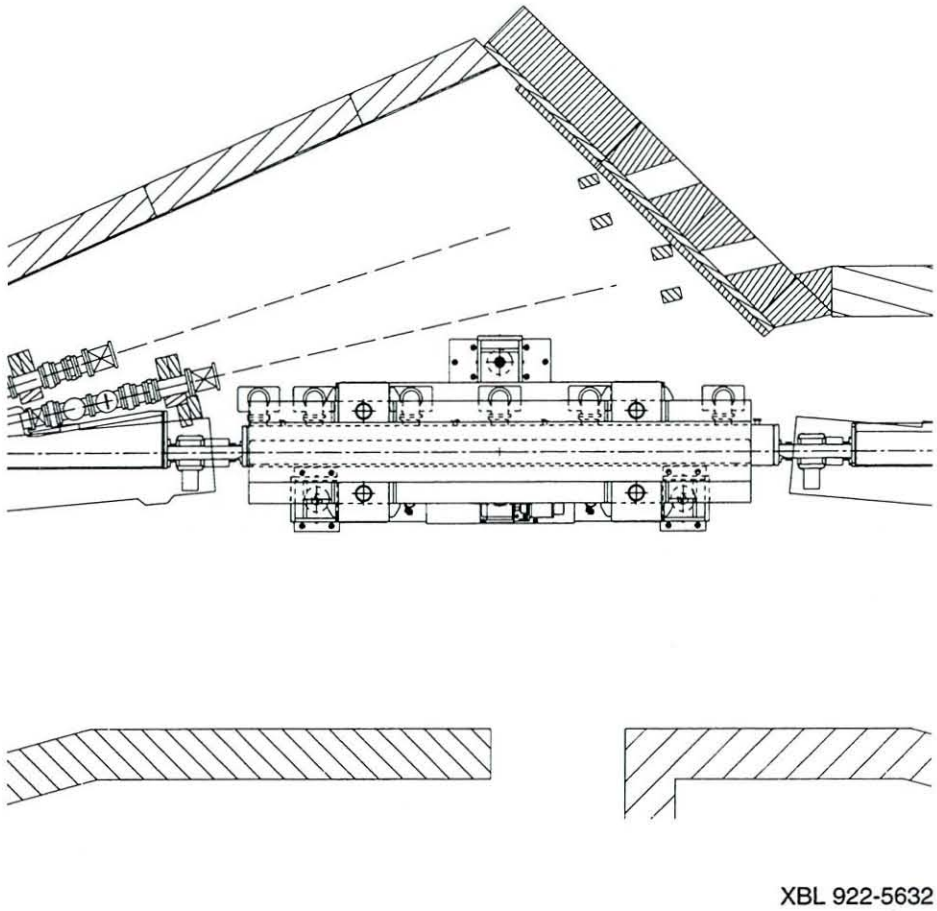

Figure 3-5. Plan view of undulator U8.0, in place in the ALS storage ring.

3.2.1 Magnetic Structure

The magnetic structure includes the periodic magnetic structure, the end rotators, the 4.5-meter-long backing beams, and the auxiliary tuning coils. The U8.0 undulator incorporates a hybrid magnetic configuration consisting of neodymium-iron-boron (Nd-Fe-B) blocks and vanadium permendur poles. A hybrid design was chosen for its several advantages over a design using pure current-sheet-equivalent material (CSEM):

- The field is dominated by the characteristics of the poles, which can be made very uniform, both in size and in magnetic performance.
- The errors in the magnetic moments of the blocks can be averaged by sorting the blocks for the poles.
- Errors in the total magnetic moment of all the blocks of a pole have little effect on the electron beam, or the radiation spectrum, because they contribute equally to adjacent poles and produce no electron beam steering.
- A higher peak field can be achieved (this is important mainly for wigglers).

The configuration of the magnetic structure is a conventional one, with a rectangular pole and Nd-Fe-B block array. A half-period of the structure is shown in Fig. 3-6. This configuration was chosen for its simplicity, ease of manufacture, and high performance. The objective of the magnetic design was to develop a magnetically well-behaved structure that yields a high value of B_{eff} for mid-plane fields, with B_{eff} given by

$$B_{\text{eff}}^2 = B_1^2 + \frac{1}{3^2} B_3^2 + \frac{1}{5^2} B_5^2 + \cdots , \tag{3-4}$$

where B_1 is the amplitude of the fundamental, B_3 is the amplitude of the third harmonic, etc. The final configuration, based on 2-D modeling with the computer code PANDIRA and a 3-D theory for hybrid CSEM insertion devices, was optimized by fixing the operating point of the Nd-Fe-B and determining the pole thickness that maximizes the value of B_{eff}. To verify the design, a model was built and tested under a variety of conditions.

Figures 3-6 and 3-7 illustrate other significant features of the magnetic structure design:

- Half-period pole assemblies, consisting of an aluminum keeper, a vanadium permendur pole (8 cm wide × 6 cm high × 1.28 cm thick) pinned into the keeper, and six Nd-Fe-B blocks (3.5 cm square × 2.72 cm thick in the magnetization direction) bonded into the assembly. This design allows for accurate vertical and longitudinal pole tip placement.
- Assembly sections, each of which consists of a pole mount fabricated from 5083-H321 aluminum, onto which half-period pole assemblies are mounted and accurately positioned. The maximum length of the assembly sections for the U8.0 undulator is approximately 84 cm.
- Backing beams that provide magnetic shielding and hold five assembly sections and two end sections. Each beam is a 4.5-meter-long, stress-relieved steel structure, 81 cm deep and 93 cm wide.
- Dipole and steering coils, which will be added if needed.

The upper and lower backing beams are tied together with low-reluctance Ni-Fe hinges to reduce the effect of environmental fields on the electron beam trajectory.

To avoid steering the beam as it travels through the insertion device, it is necessary to control the configuration of the fields at the ends. Because of concerns about dimensional instability caused by coil heating effects, no end coils are used in the U8.0 design. Instead, the basic end pole design incorporates a system of Nd-Fe-B rotors to fine tune the local fields. These rotors allow precise and convenient adjustment of end fields, and their position can be set manually or remotely.

As shown in Fig. 3-8, there are four rotors at each end of the device, two above the horizontal midplane and two below. There is an additional fixed quantity of Nd-Fe-B at the location of each rotor. Beyond the second rotor at each end, the structure is periodic,

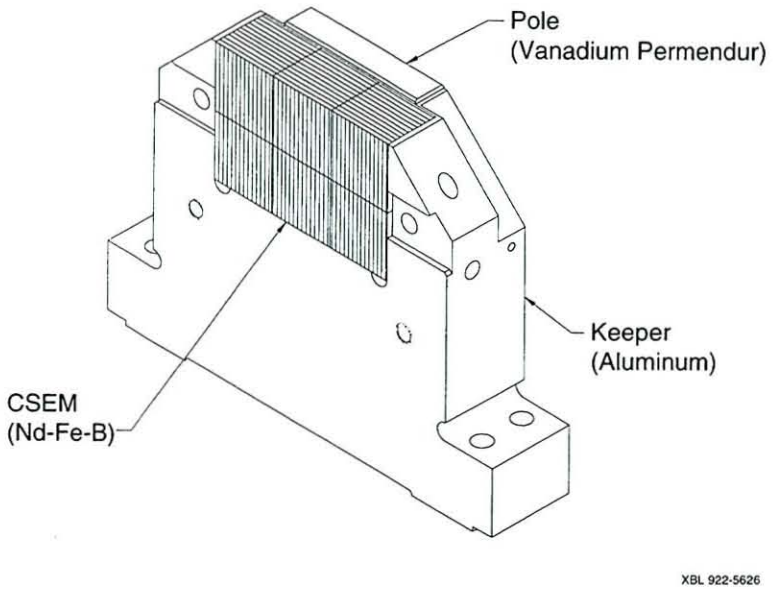

Figure 3-6. Half-period pole assembly for the U8.0 undulator.

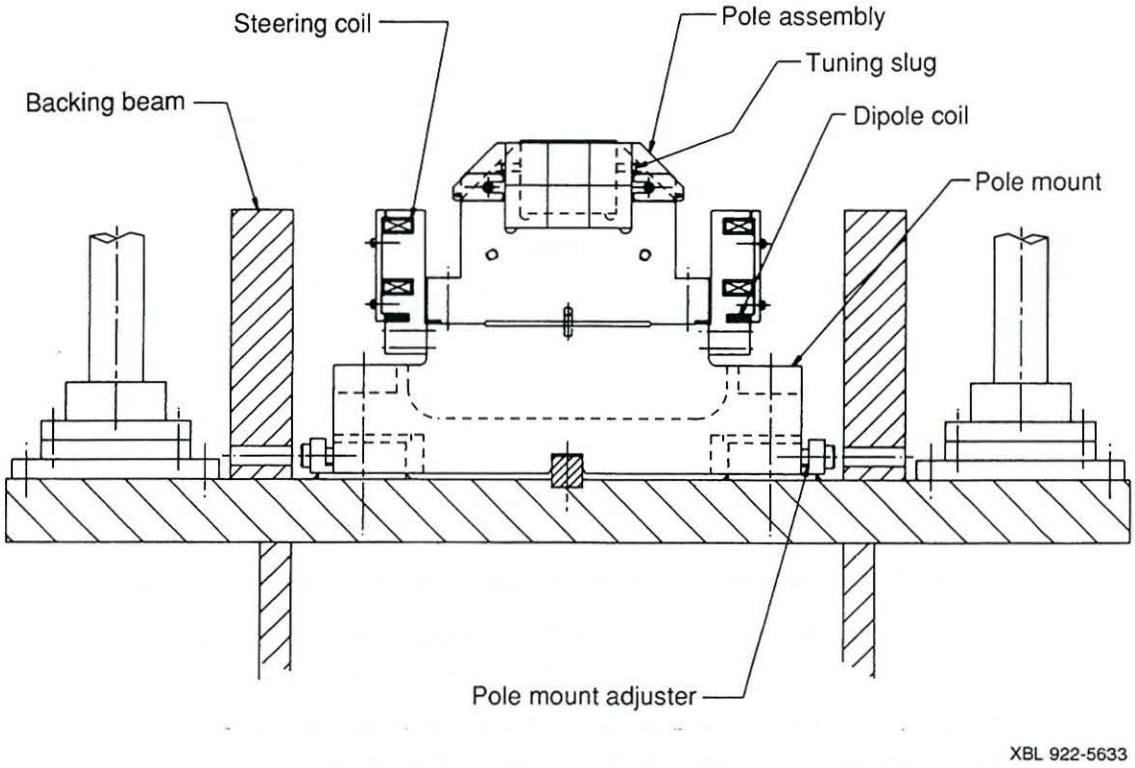

Figure 3-7. End view of the U8.0 magnetic structure assembly.

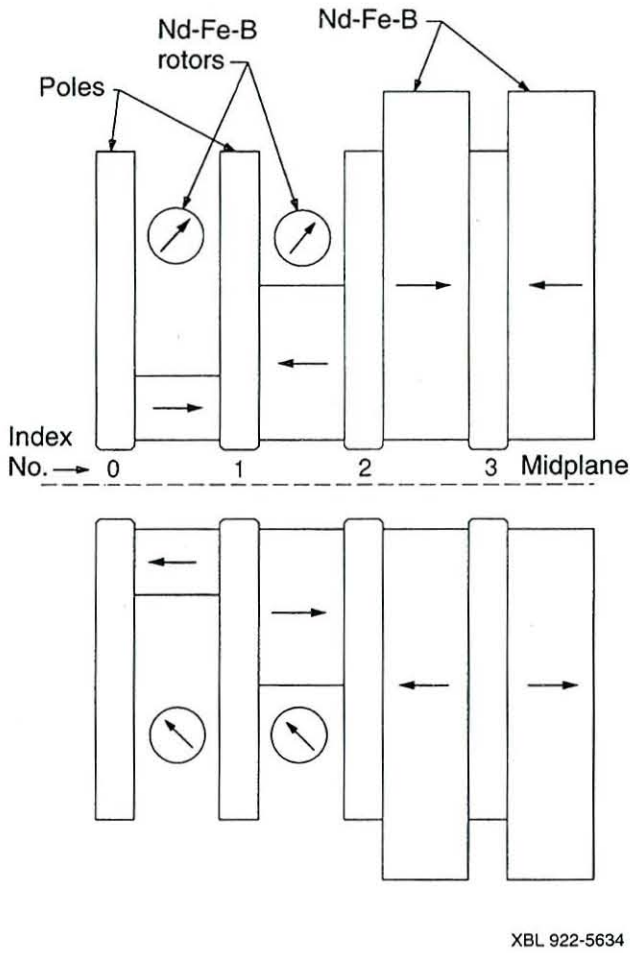

Figure 3-8. Schematic of the end rotor configuration for the U8.0 undulator.

with the full quantity of Nd-Fe-B between each pair of poles. Gap-dependent errors at the ends are small, thus the objective will be to determine a fixed orientation for all rotors that minimizes the steering errors introduced by the end correctors over the entire range of gaps.

3.2.2 Support and Drive Systems

The support and drive systems include the support structure that provides the framework for holding the magnetic structure and the drive system that opens and closes the magnetic gap. Requirements for the support structure shown in Fig. 3-4 include:

- Support a maximum magnetic load of 84,000 lb (the loading of a 5-meter-long insertion device with 10-cm-wide poles, operating at 1.85 T).
- Maintain a magnetic gap variation of 46 μm at the smallest gap (14 mm). This requirement is imposed by the U3.65 undulator; the U8.0 undulator requirement is less severe.

- Meet the ALS storage ring, tunnel, and adjacent beamline space requirements.
- Accommodate the vacuum system and its support structure.
- Allow easy installation, alignment, and service in the storage ring.

A four-post configuration was chosen over a C-frame structure for four principal reasons: (i) It allows greater tunnel aisle clearance, (ii) it ensures less gap deflection, owing to a more rigid structure, (iii) it will cause no pole rotation, because of the symmetrical support loading, and (iv) it allows better access for assembly and maintenance of components. The one argument in favor of the C-frame structure was that it would be open on one side, thus allowing magnetic measurements with an external measurement system and the possibility of insertion device installation with the vacuum chamber in place in the storage ring.

As shown in Fig. 3-4, the support structure is of rigid construction, consisting of a base onto which two lower horizontal members are mounted. Four vertical posts are in turn attached to the lower horizontal members, and the two upper horizontal members are attached to the tops of these posts. The horizontal beams pass through the webs of the backing beams to limit the overall height of the support structure to less than the 8-ft tunnel height. The base is a welded assembly containing a platform for the gear reduction unit and motor. Three y-axis leveling mounts, which include x- and z-axis adjustments, provide a kinematic support system. This arrangement provides a satisfactory range of adjustments for all six degrees of freedom for installation and alignment. The support structure is modular, with bolted and pinned members, which simplifies fabrication, installation, calibration, and servicing. To minimize warpage, all subassemblies will be individually stress-relieved before final machining.

A magnetic-load compensating spring system is provided to buck the gap-dependent magnetic load. For the U8.0 undulator, the eight spring assemblies consist of two helical compression springs in series, selected to match the gap-dependent magnetic load to within 20%. The compensating spring system provides the following benefits:

- It reduces system friction, which ensures better positional response from the drive system over the life of the device.
- It minimizes the required motor load-holding torque at any magnet gap, which gives stationary stability when the null position is reached. Motor current can be turned off or reduced to minimize motor heating.
- It eliminates "lifting" when the magnetic load exceeds the gravitational weight of the lower backing beam.
- It reduces structure load, which yields better gap reproducibility.

Wavelength tunability is a central feature of the radiation produced by insertion devices. Accordingly, requirements on the drive system that varies the insertion device gap (and thus provides the tunability) are critical. The requirements that governed our design choices were the following:

- Capability of opening the magnetic gap with an 84,000-lb magnetic load.
- A step resolution of 1 μm (based on increments of 1/10 of the fifth harmonic for a U3.65 undulator).
- A maximum scanning speed of 2.3 mm/s (based on a scan rate of 1 bandwidth/s for a 11-cm-period device).
- A magnetic gap range of 1.4 to 21.6 cm.
- Opening and closing times of five minutes or less.
- Gap position determination by an absolute encoder.

The magnet gap is varied by moving the backing beams, which is accomplished in turn by rotating 2-mm-pitch Transrol roller screws that are mounted to the horizontal beams and support the backing beams. The four right-handed roller screws attached to the upper backing beam and the four left-handed roller screws attached to the lower backing beam are connected by a shaft coupling and combine to provide equal and opposite vertical motion when rotated. Rotation of a stepper motor is transmitted through a gear box and a series of sprocket wheels and roller chains to the roller screws. An absolute rotary encoder is coupled to a Transrol roller screw shaft to read the absolute position of the magnet gap.

The drive system is sized for the maximum possible ALS insertion device magnetic load. Though one revolution of the roller screws changes the gap by 4 mm, the minimum incremental gap motion is 0.1 μm, made possible by the control electronics of the stepper motor and the subsequent gear reduction unit. The motor can easily move the gap from its fully closed to its fully open position in 1.5 minutes. The rotary encoder selected is a Compumotor AR-23, which has a resolution of 16,384 counts/revolution and is mounted with a step-up ratio of 4.75. This arrangement allows resolution of a gap variation of less than 0.1 μm.

Analysis of the proposed system shows that stick-slip will give a gap uncertainty of less than 0.4 μm. Unidirectional scanning and control of the undulator gap are required because backlash is estimated at 87 μm in gap motion. Scan-to-scan gap reproducibility for unidirectional scanning is estimated to be less than 8 μm.

Drive system protection measures include (i) travel limits set by the closed-loop control system stored in the control program, (ii) microswitches hard-wired to the control system for minimum and maximum gap positions, (iii) mechanical stops for minimum and maximum gap positions, (iv) full-torque stepper-motor stall capability, (v) mechanical drive components designed to handle full stepper motor torque, and (vi) full-load current sensing (the control system will shut down current after a preset time interval).

Temperature control was also considered in the design of the insertion devices. A temperature difference of greater than 0.1°C between the top and bottom of an undulator backing beam produces excessive spectral broadening. Hence, each undulator will be

surrounded by an enclosure, whose temperature will be maintained by circulating the air with muffin fans.

3.2.3 Control System

The control system described here for U8.0 was designed to provide sufficient positional accuracy, resolution, and velocity and range information for the motors and encoders for all anticipated insertion devices. In addition, the control system must control and monitor the dipole and steering correction power supplies, as well as control gap-dependent rotator positioning, if required. The insertion device control system will be integrated into the overall accelerator computer control system. A control system block diagram is shown in Fig. 3-9.

The insertion device gap must be controlled (via request to the accelerator control system) and monitored by the experimenter using the generated synchrotron radiation. During development, the insertion device will be manipulable through the control system by a local computer, so that the necessary control and monitoring algorithms can be determined.

The control system incorporates five intelligent local controllers (ILCs), one of which coordinates the activities of the other four and communicates with either the accelerator control system database or an IBM-PC. The ILCs controlling the rotators and power supplies contain the compensation data tables that give the rotator positions and the coil settings required for each magnet gap.

Provisions for interfacing limit switches are included in the indexer, along with the ability to compensate for backlash and to program acceleration and deceleration curves. The indexer can be programmed to microstep the motor with as many as 25,000 steps per revolution.

3.2.4 Vacuum System

The objective of the vacuum system is to provide a 10^{-9} Torr vacuum at the insertion device beam aperture. The dimensions of the vacuum chamber's rectangular beam aperture are 1.0 cm vertical $\times$ 6.0 cm horizontal. A plan view and section of an undulator vacuum system are shown in Fig. 3-10.

The 5.1-meter-long undulator vacuum chamber will be made of two pieces of machined 5083-H321 aluminum alloy. This two-piece welded chamber is similar to the ALS storage ring sector chambers that are currently under construction. The chamber has a total horizontal aperture of 21.8 cm; the inner 6.0 cm provides the circulating beam aperture, and the outer aperture allows the bend-magnet synchrotron radiation to pass through the chamber. The radiation is then absorbed by a photon stop located at the end of the chamber. The chamber has an antechamber along its entire length, as part of the outer aperture, to improve vacuum by increasing conductance. External surfaces of the chamber have pockets machined into them for the magnet poles. The shape allows a minimum magnetic gap of 1.4 cm. The undulator vacuum chamber has six side ports and

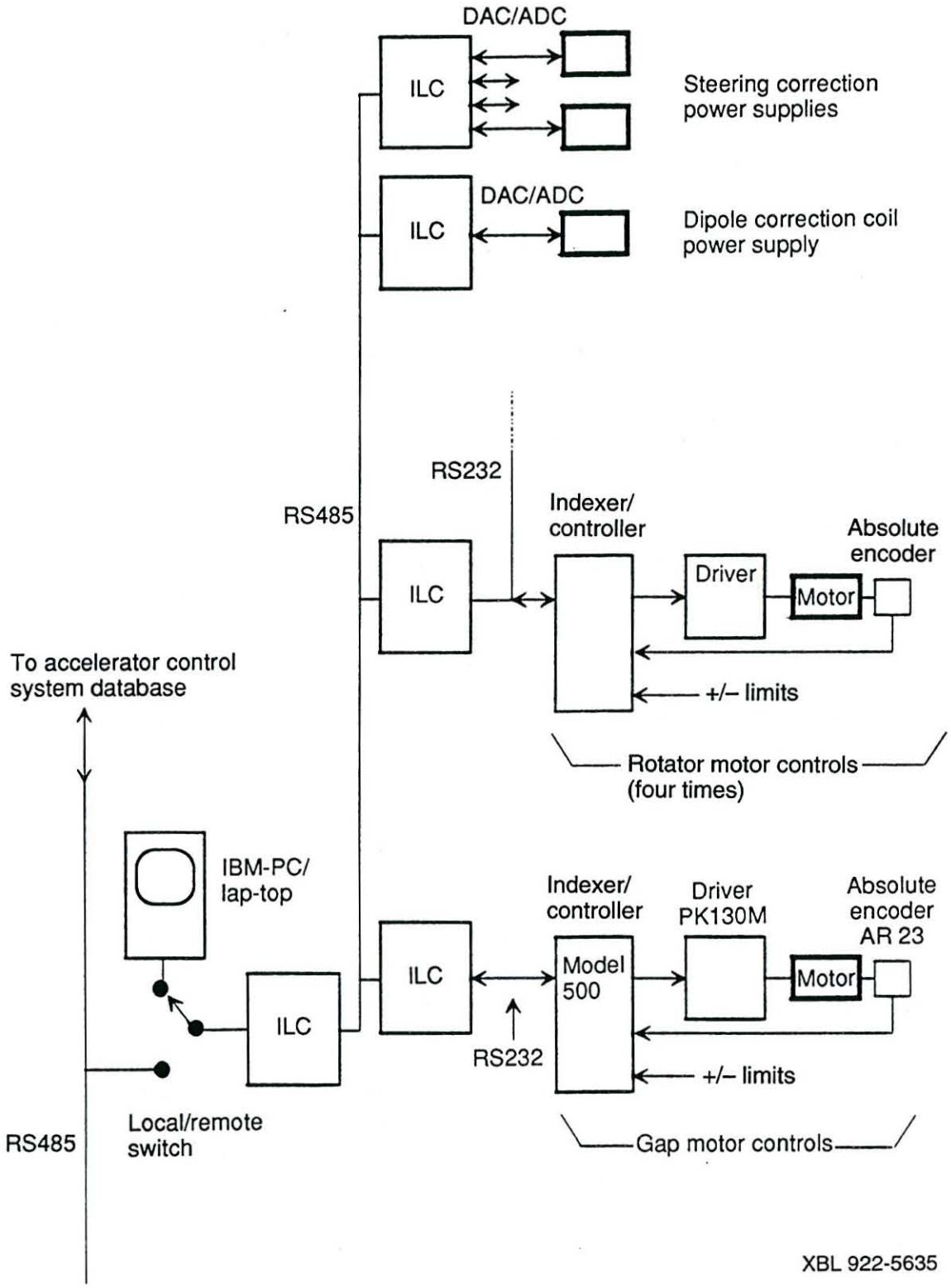

Figure 3-9. Diagram of the ALS insertion device control system.

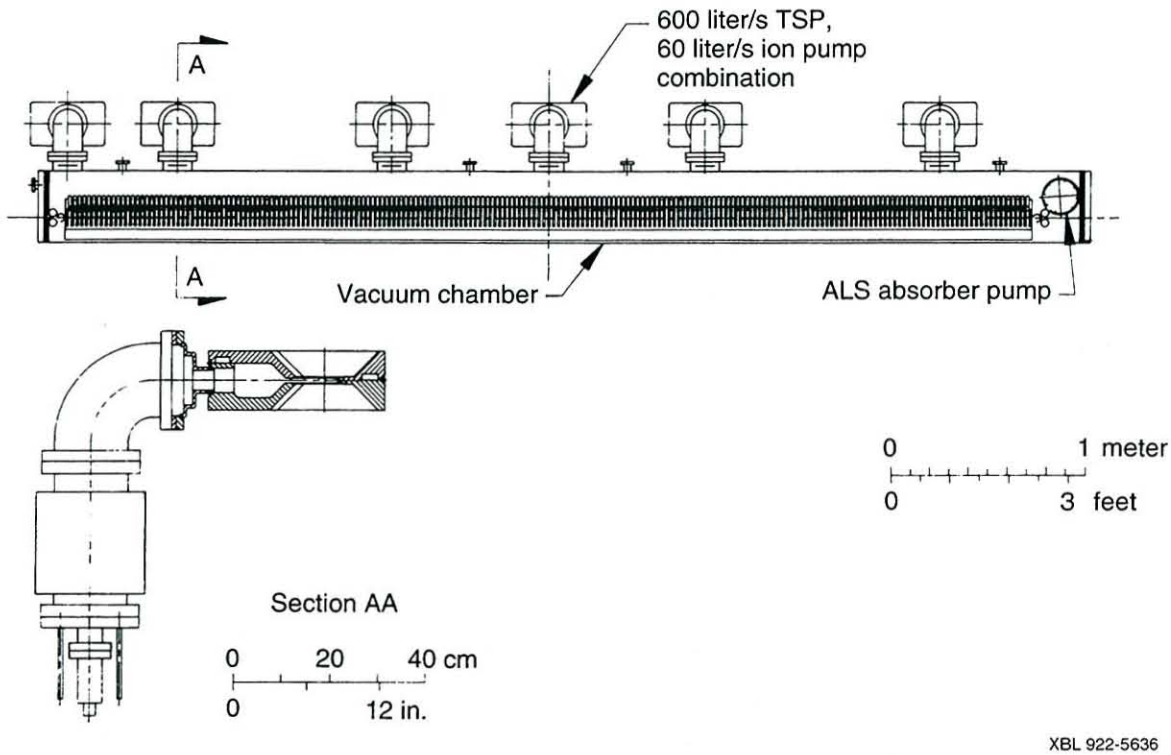

Figure 3-10. Plan view and section of the vacuum system for the U8.0 undulator.

one top and bottom port near the exit end of the chamber for vacuum pumps. Several smaller ports are provided for a roughing system, ion gauges, and an RGA head. The upstream end of the chamber includes a flange for insertion of NEG pumping strips and for a viewport to allow remote visual inspection of the aperture.

The vacuum system consists of six combination 600-liter/s titanium sublimation and 60-liter/s ion pumps (each of which gives a net pumping speed of 173 liter/s at the antechamber) and an ALS absorber pump having a capacity of 1450 liter/s. The total antechamber pumping speed is 2500 liter/s. The ion pumps will be driven and monitored by ion pump controllers. The titanium sublimation pump filaments will be powered by a single power supply, multiplexed to the six pumps.

To confirm the performance of this system, we estimated the pressure distribution at the beam aperture to be expected after 40 A·hr of accumulated electron beam operation, assuming (i) a thermal outgassing rate of 10^{-11} Torr·liter/(s·cm^2), (ii) a molecular production rate due to photon-induced desorption of 10^{-5} molecules/photon (for photons having energies greater than 10 eV), and (iii) 1.9-GeV, 400-mA storage ring operation. The computed pressure distribution is shown in Fig. 3-11; the average value is 3×10^{-10} Torr. If two NEG strips, 3 cm wide × 450 cm long, are inserted into the chamber and activated, the pressure drops to 1×10^{-10} Torr in the beam aperture.

During operation, vacuum chamber pressure will be monitored in two ways: Ion pump current will be converted to approximate pressure at the local display, and accurate

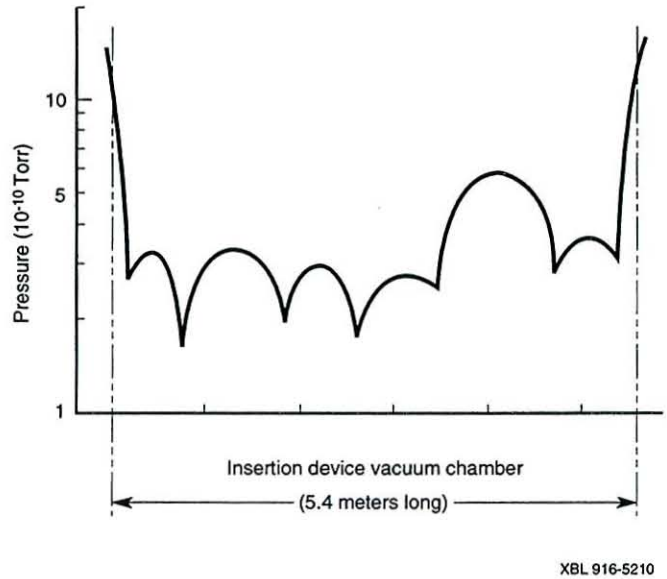

Figure 3-11. Plot of the calculated pressure profile for the U8.0 undulator.

pressure measurements will be taken at one or two locations with nude ion gauges and an ion gauge controller.

The vacuum chamber and the associated pumping system are supported from the top of the insertion device support structure. Struts are used for the chamber and spring-loaded hangers for the pumps.

3.3 UNDULATOR U10.0

As a second insertion device for this baseline complement, we selected an undulator concept described in the *Chemical Dynamics Research Laboratory Conceptual Design Summary* [1990], undulator U10.0. This undulator has 45 periods, each of length 10.0 cm, and a total length of 4.6 meters. The output of the fundamental wavelength can be tuned over the range 58.2–5905 Å (2.1–213 eV); it lies within a cone of rms half-angle equal to approximately 0.03 mrad. By using the third harmonic, the spectral range 19.4–1968 Å (9–638 eV) can also be covered. Performance data are summarized in Figs. 3-2 and 3-3 and in Table 3-1b.

As work on the conceptual design report is still under way, detailed design parameters have not yet been determined for the U10.0 undulator. However, apart from differences in the dimensions of magnetic structure components (see Table 3-4), the conceptual design of U10.0 follows that of U8.0, so that the description in Section 3.2 and Figs. 3-4 through 3-11 can be applied to this undulator as well.

Table 3-4. Conceptual design parameters for undulator U10.0.

Effective peak field at 1.4-cm magnetic gap (T)	1.53
Period length (cm)	10.0
Number of periods	45
Number of full-field poles	87
Entrance sequence	0, −1/2, +1, −1
Overall length (m)	4.6

3.4 UNDULATOR U3.65

As a third insertion device for this baseline complement, we selected undulator 3.65, which is very similar to the U3.9 described in *An ALS Handbook* [1989]. This undulator has 123 periods, each of length 3.65 cm, and a total length of 4.6 meters. The output of the fundamental wavelength lies within a cone of rms half-angle equal to approximately 0.03 mrad. By using the third and fifth harmonics, as well as the fundamental, the spectral range 4.3-65.5 Å (189-2920 eV) can be covered. Performance data are summarized in Figs. 3-2 and 3-3 and in Table 3-1c.

Table 3-5 lists the major conceptual design parameters for the U3.65 undulator. Apart from differences in the dimensions of magnetic structure components, the conceptual design of U3.65 follows that of U8.0, so that the description in Section 3.2 and Figs. 3-4 through 3-11 can be applied to this undulator as well.

Table 3-5. Conceptual design parameters for undulator U3.65.

Effective peak field at 1.4-cm magnetic gap (T)	0.60
Period length (cm)	3.65
Number of periods	123
Number of full-field poles	247
Nominal Entrance sequence	0, −1/2, +1, −1
Overall length (cm)	456.8
End correction range, B_y (G·cm)	1,500
End correction range, B_x (G·cm)	0
Systematic gap variation (μm)	≤46

3.5 CROSSED-FIELD UNDULATOR UX

Several types of insertion devices have been proposed for producing soft x-ray and VUV synchrotron radiation with circular or, more generally, elliptical polarization. Alternatives include crossed undulators, elliptical wigglers, asymmetric wigglers, helical undulators, tilt-pole undulators, crossed/overlapped undulators, and planar/helical undulators. Of these concepts, only a few have been developed to the stage of operation and testing of a prototype unit . The two devices that appear to have the greatest potential for application at the ALS are the crossed undulator and the elliptical wiggler. In addition to the use of specialized insertion devices, optical methods may be the most effective method of producing elliptically polarized light in certain energy ranges. Independent of the method used, the production of elliptically polarized light is only the first step in a process that must preserve the state of the polarization through a beamline and deliver it to the user.

Each of the candidate device concepts has an effective energy range where it may be used most productively. Conventional, transparent optics are useful in the lowest energy range, up to about 10 eV. This range is of great interest, but the ALS has very limited capability in this area. The crossed undulator and other undulator variants can produce light on the ALS in the range from 20 eV to perhaps 1 keV, a range that is very interesting for ALS science. Wigglers produce a wide range of photon energies, from a few eV to the highest photon energies available on the ALS. The maximum is three or four times the 3-keV critical energy for a 2-tesla wiggler when the ALS operates at an energy of 1.5 GeV. At the extreme upper end of the range of photon energies that are accessible to the ALS, another optical technology, multilayers, which are now under development, may prove to be effective in the production of elliptically polarized light.

3.5.1 Undulator Characteristics

Eventually, several techniques may be used at the ALS to produce elliptically polarized light. The crossed undulator, as shown in Fig. 3-12, is described here. This type of insertion device consists of two separate undulators that are oriented at right angles to each other and separated by a modulator or phase shifter. While passing through the first undulator, an electron oscillates in the x-direction, thus emitting radiation linearly polarized with the electric field in the x-direction. Similarly, the radiation from the second undulator is linearly polarized with the field in the y-direction. When observed through a monochromator, the combined radiation is generally elliptically polarized, the polarization ellipse being determined by the phasing (electron path length) between the undulators. By varying the electron path length between the undulators with an ac magnet (called the modulator), the polarization of the combined radiation can be arbitrarily adjusted. In particular, it can be modulated between left and right circular polarization states or between two mutually perpendicular linear polarization states. The operation of the crossed undulator is based on the interference effect and requires a low-emittance electron beam for satisfactory performance at short

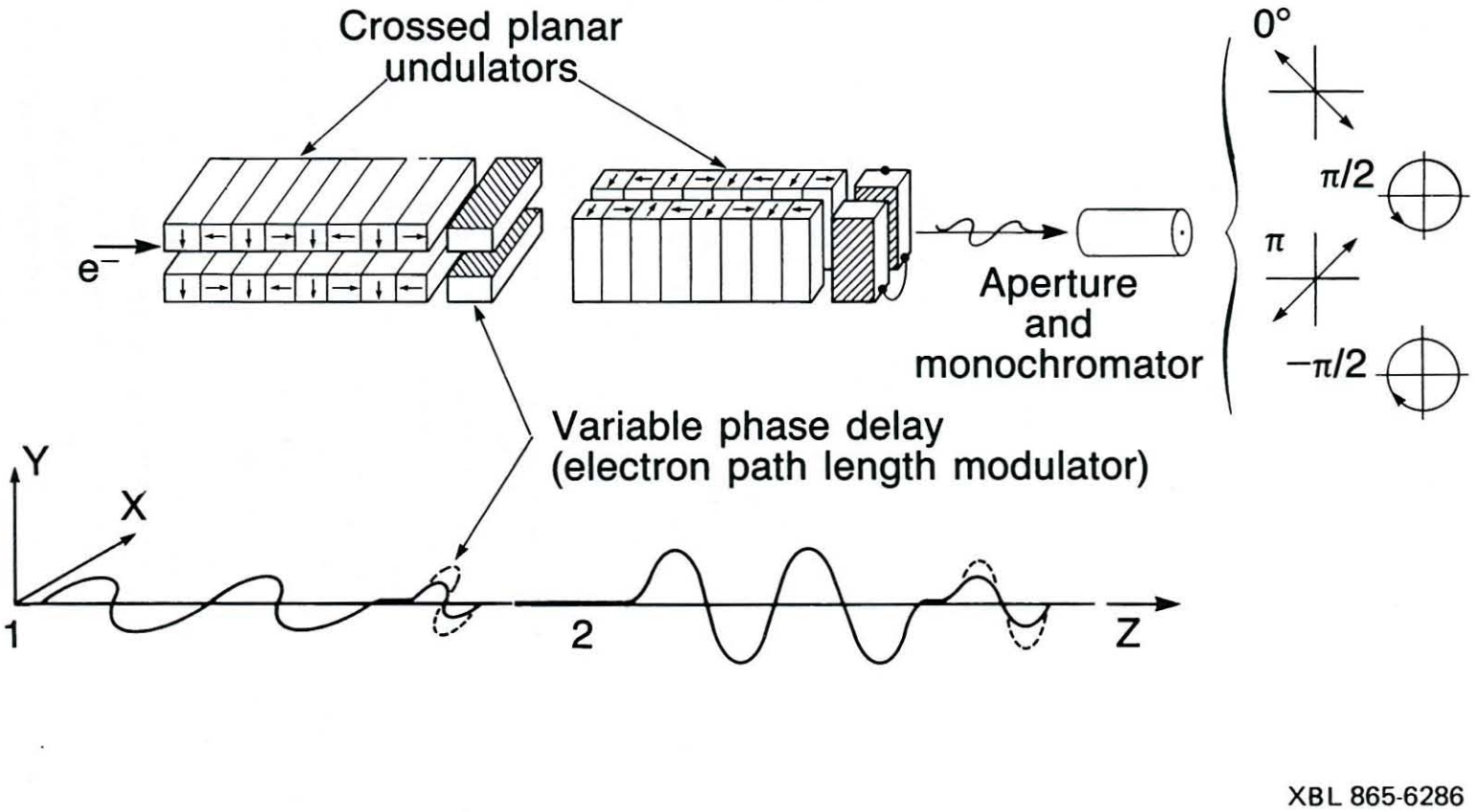

Figure 3-12. Schematic diagram of a pair of crossed undulators that could be used to produce variably polarized radiation.

wavelengths. Because of this, the spectral range for substantially polarized radiation from the UX undulator will be limited to less than about 200 eV. The photon beam from the crossed undulator is almost circular and the device will be installed in straight section 4 of the ALS, which has a special downstream vacuum chamber and has been reserved for such an insertion device. Table 3.6 lists some of the functional requirements for the UX undulator.

Table 3-6. Undulator UX functional requirements based on user needs and ALS capability.

Spectral range	20-300 eV
Total phase shift (ac + dc)	> 270°
Phase modulation rate (ac)	10 Hz

One option for the design is to orient the two sections at 45 degrees with respect to the vertical. This orientation has two advantages. First, since the minimum horizontal vacuum aperture in the ALS storage ring is 5 cm and the vertical is about 1 cm (1.8 cm at commissioning), it allows the magnetic gap to be reduced from slightly more than 5 cm to less than 4 cm. The smaller gap will allow a higher field in the insertion device, thereby extending the low energy limit of the spectral range. Second, the ALS electron beam has an elliptical cross section in the region of the insertion devices, about 300 μm wide and 50 μm high. The symmetry of the radiation from the crossed undulator therefore becomes more symmetrical when the two sections are oriented at 45 degrees. The disadvantage of the 45 degree orientation is the coupling of the vertical and horizontal motions of the electrons, which may affect machine operation.

Because of the large magnetic gap (4 to 5 cm), the crossed undulator will be a moderately low-field (0.4 to 0.5 T) device as compared to the conventional ALS insertion devices, such as the 8-centimeter-period undulator, which produces an effective field greater than 1.2 T. As a result, the undulator magnetic structure may be based on a pure-permanent-magnet design rather than the hybrid design used for other ALS insertion devices. (At large magnetic gap the on-axis field produced by a pure-permanent-magnet device is similar to that produced by hybrid device.) The viability of this option depends on the ability to calculate and control the error fields in a pure-permanent-magnet structure accurately enough to prevent degradation of the characteristics of the electron beam in the ALS storage ring.

The usable length of an ALS straight section is about 4.5 m. Thus each of the two sections of UX will have somewhat less than half as many periods as the standard 4.5-m-long ALS undulator with the same period. The period of the undulator is not yet fixed, but will probably be in the range of 8 to 10 cm. Though the period strongly affects what scientific opportunities are available, it is neither a design nor a cost driver, thus it is not appropriate to specify this parameter too early. The characteristics, including those based

on requirements that the storage-ring performance not be degraded, for the crossed undulator are given in Table 3.7.

3.5.2 Modulator Characteristics

The modulator that is positioned between the two undulator sections consists of three ac magnets. The electron beam passes through these magnets in sequence. They are designed to cause a local distortion in the trajectory of the electron beam without introducing a net deflection or displacement of the beam.. This is done by having the integrated field of the first and third magnets identical and equal to half the integrated field of the second magnet. The sign of the fields of the first and third magnets are opposite to that of the second. With a peak field of 0.3 T in the central magnet the deflection of the electron beam in the modulator is quite small (tens of microns), but it is sufficient to provide a phase shift of at least 270 degrees for the lowest energy photons at 20 eV. For ideal operation, the magnitudes of the minimum and maximum fields in the magnets must be adjustable to the values that provide a 180 degree phase shift of the photon beam from right circularly polarized to left circularly polarized.

The modulator can easily operate a frequency of 10 Hz or more, which is required by the users. However, it is necessary to have the fields in the modulator penetrate the vacuum chamber and provide a sinusoidally varying field in the region of the electron beam. This suggests a careful study of the interaction of the modulator and the local vacuum chamber.

Table 3-7. Undulator UX characteristics.

Physical aperture	
Horizontal	5 cm
Vertical (based on existing aperture limitation)	2 cm
Magnetic-field control Injection	No reduction of stored current, and No reduction of lifetime
Length of each section	~1.9 m
Length of modulator	~0.3 m
Integrated field	<100 G-cm
Integrated quadrupole	<50 G
Period length	8 to 10 cm
Number of periods	19 per section

The crossed undulator concept has been discussed for some time, but only recently has a device been constructed and tested [J. Bahrdt et al., 1992]. This prototype device was designed and built by BESSY in Berlin, and has been tested at a beam energy of 800-MeV. The device performance was about as expected in terms of total flux, but the percentage of radiation that was circularly polarized was lower than expected. We believe this is due in part to the modulator not yet being fully operational. It is also very difficult to measure polarization. Tests are still being carried out with the device at BESSY and further results are expected this year.

3.6 WIGGLER W16.0

The W16.0 wiggler chosen for the baseline complement of insertion devices described here is one for which a detailed conceptual design exists [ALS Insertion Device Design Team, 1991]. Accordingly, considerably more design detail is available than is presented here. The following paragraphs summarize only briefly the design of the wiggler, emphasizing in particular the differences between it and the design of the U8.0 undulator described in Section 3.2. The W16.0 wiggler is shown in Fig. 3-13.

The design requirements for the W16.0 wiggler were determined primarily by the user community. The central goals are to provide an on-axis peak critical energy of 3.1 keV and to distribute the radiation over a fan width of 16 mrad. The resulting device has 16 periods, each of length 16.0 cm, and a total length of 2.9 meters. The operating range of photon energies extends from below 1 keV to beyond 10 keV. Performance data are summarized in Fig. 3-3 and in Table 3-1d. Major parameters and tolerances for W16.0 are given in Tables 3-8 and 3-9. The values in Table 3-9 were established principally by considering achievable manufacturing tolerances, whereas the tolerances for undulators are based on spectral performance demands.

3.6.1 Magnetic Structure

The magnetic structure of the W16.0 wiggler is of the same hybrid configuration as the undulators described above. Likewise, the design was based on 2-D modeling with the computer code PANDIRA and a 3-D theory for hybrid CSEM insertion devices. The configuration was optimized for a high value of the peak magnetic field and an adequate fan of radiation for mid-plane fields.

Figures 3-14 and 3-15 illustrate the major features of the wiggler magnetic structure design:

- Half-period pole assemblies, consisting of an aluminum keeper, a vanadium permendur pole (8 cm wide × 8.8 cm high × 2.3 cm thick) pinned into the keeper, and twelve Nd-Fe-B blocks, six on each side of the pole.
- Assembly sections, each of which consists of an aluminum pole mount, onto which half-period pole assemblies are mounted and accurately positioned. The maximum

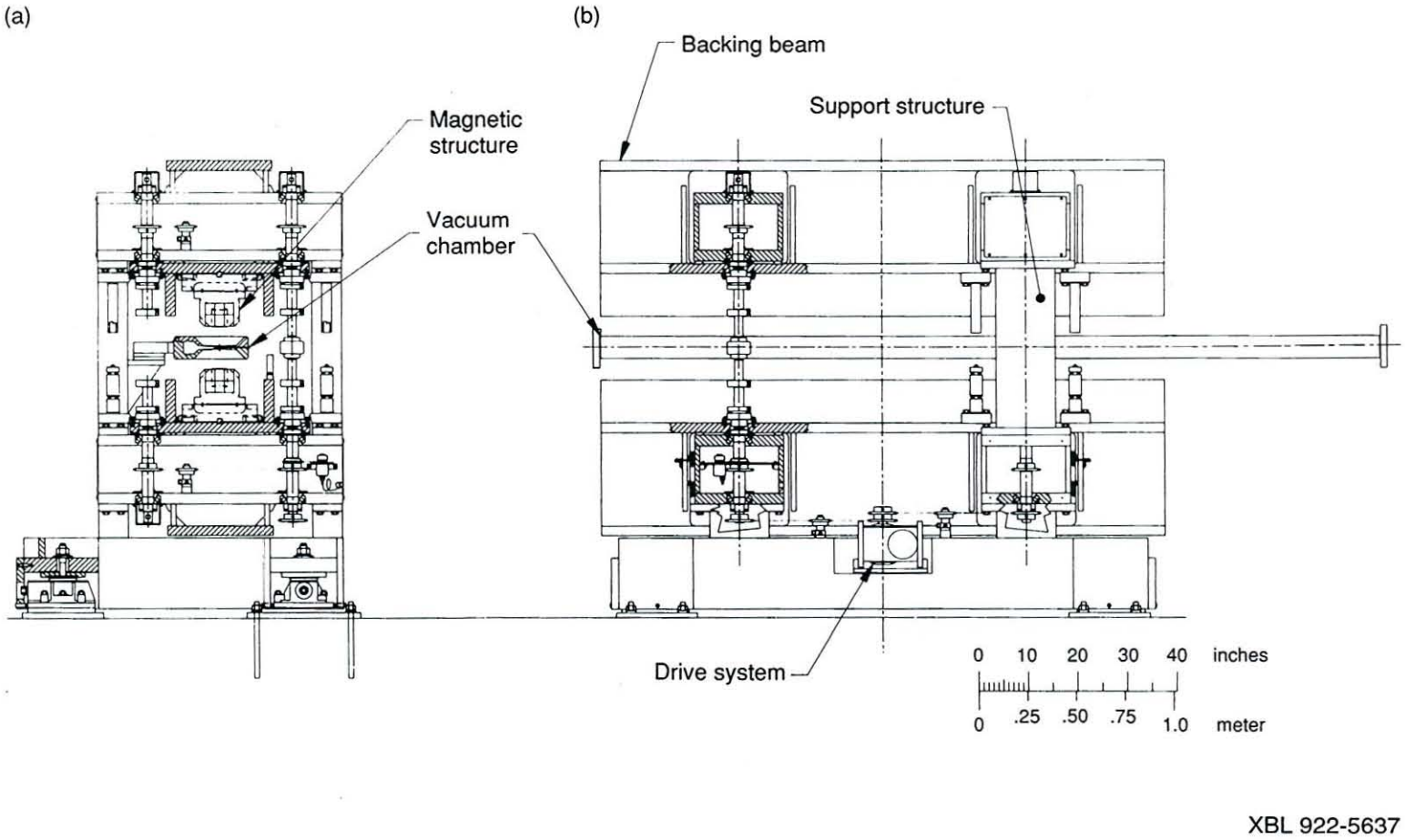

Figure 3-13. (a) End view of wiggler W16.0, installed in its support and drive structure; (b) elevation view of the support and drive system.

Table 3-8. Engineering design parameters for wiggler W16.0.

Max. peak field at 1.4-cm magnetic gap (T)	2.07
Effective peak field at 1.4-cm magnetic gap (T)	1.78
Period length (cm)	16
Number of periods	16
Number of full-field poles	33
Overall length (cm)	290.6
Pole width (cm)	8
Pole height (cm)	8.8
Pole thickness (cm)	2.3
Number of blocks per half-period	12
End correction range, B_y (G·cm)	3,200
End correction range, B_x (G·cm)	0

Table 3-9. Engineering design tolerances for wiggler W16.0.

Error type	Total tolerance	Error (%)
Spacing, CSEM to pole	100 μm	0.03
Pole thickness	50 μm	0.008
Vertical pole motion (gap)	30 μm	0.04
Pole width	100 μm	0.03
Variation in B_r in adjacent blocks	2.5%	0.13
Surface easy-axis orientation	2.8°	0.207
	Total:	0.25

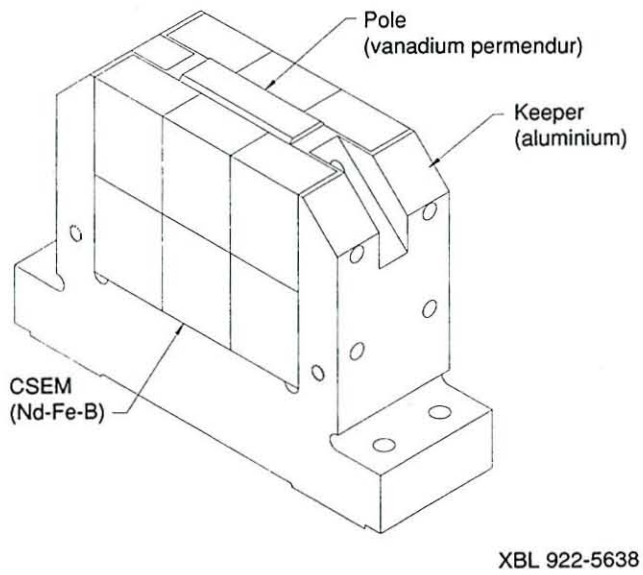

Figure 3-14. Half-period pole assembly for the W16.0 wiggler.

length of each pole mount, determined by the allowable deflections due to magnetic loading, is 80 cm.

- Backing beams of a skirted-box-section design, which provide magnetic shielding and hold the assembly sections and end sections. Each beam is a 2.9-meter-long, stress-relieved welded steel structure, 81 cm deep and 93 cm wide.

The design of the W16.0 end poles follows that of the U8.0 undulator, in which Nd-Fe-B rotors are used to fine tune the local fields (see Fig. 3-8).

3.6.2 Support and Drive Systems

The design of the support and drive systems for the W16.0 wiggler, shown in Fig. 3-13, is identical to that of the systems described above for the undulators, except that its length is reduced to 2.9 meters.

3.6.3 Control System

The control system illustrated in Fig. 3-9 and described in Section 3.2 was designed to provide integrated control for all anticipated ALS insertion devices.

3.6.4 Vacuum System

The vacuum systems for all ALS insertion devices are essentially similar, but the configuration of the system for the W16.0 wiggler differs in some details from that

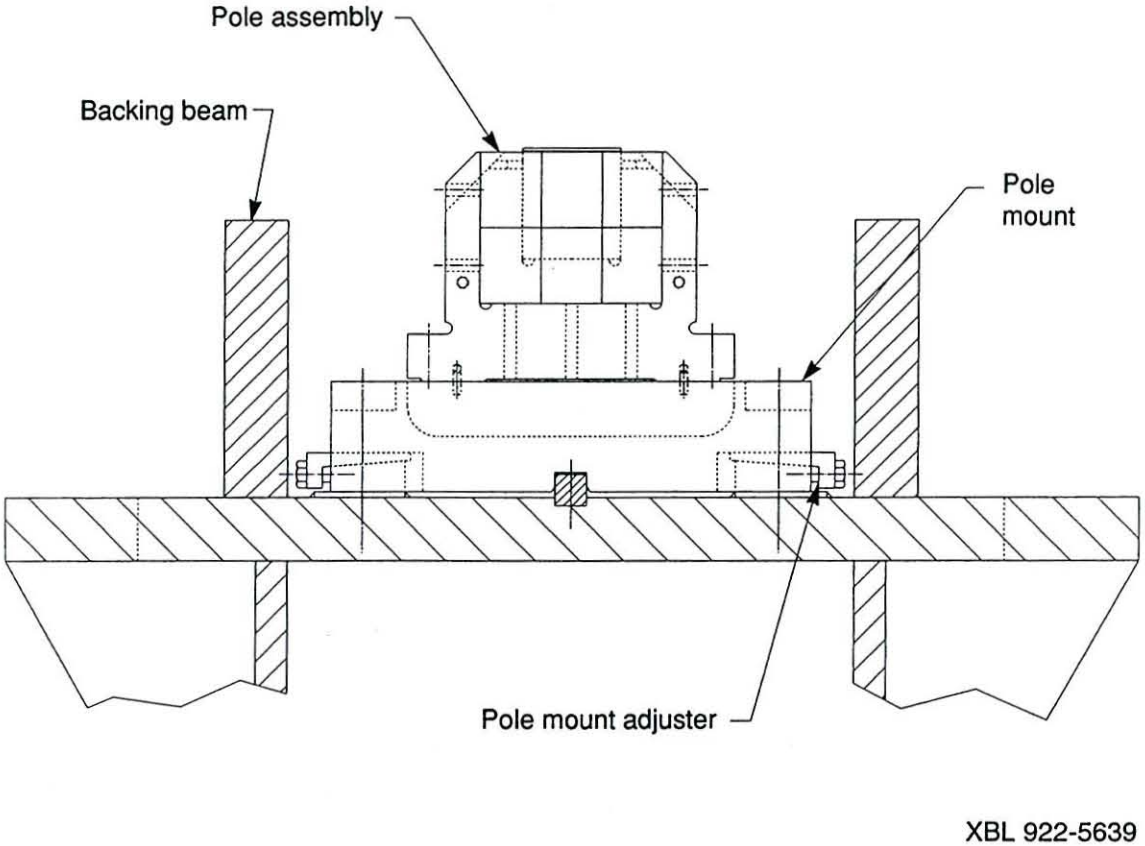

Figure 3-15. End view of the W16.0 magnetic structure assembly.

described for the U8.0 undulator. A plan view and section of the wiggler vacuum system is shown in Fig. 3-16.

The 4.2-meter-long wiggler vacuum chamber will be made of two pieces of machined 5083-H321 aluminum alloy. Construction details and the configuration of the aperture and antechamber are identical to those described for the U8.0 undulator The wiggler vacuum chamber, however, has only four side ports, together with several smaller ports for a roughing system, ion gauges, and an RGA head. The upstream end of the chamber includes a flange for insertion of NEG pumping strips and for a viewport to allow remote visual inspection of the aperture.

The vacuum system consists of four combination 600-liter/s titanium sublimation and 60-liter/s ion pumps (each of which gives a net pumping speed of 173 liter/s at the antechamber) and an ALS absorber pump. The ion pumps will be driven and monitored by ion pump controllers. The titanium sublimation pump filaments will be powered by a single power supply, multiplexed to the four pumps.

We estimate the performance of this system to be comparable to that evaluated for the U8.0 undulator (see Fig. 3-11); the average pressure in that case was calculated to be

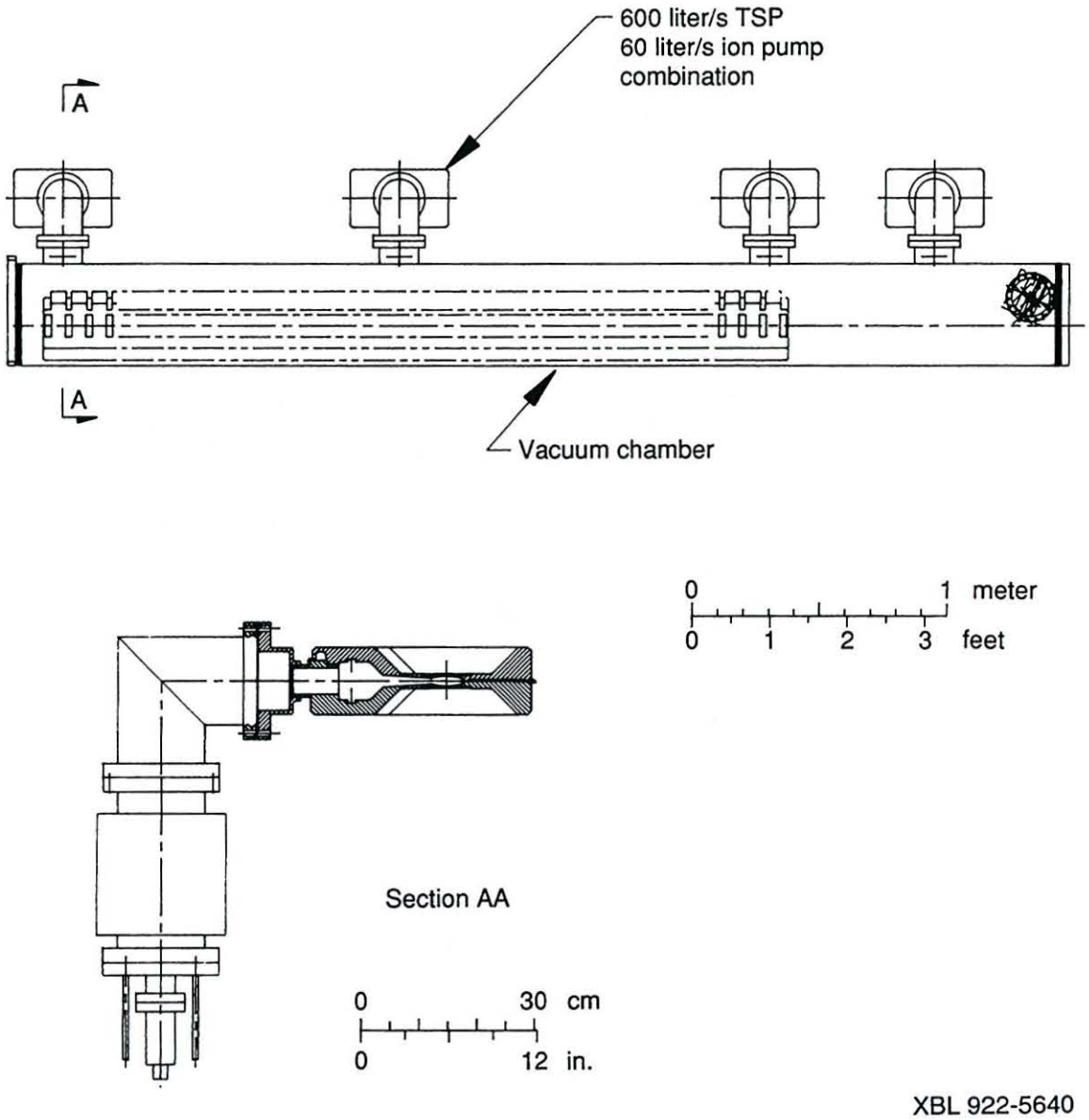

Figure 3-16. Plan view and section of the vacuum system for the W16.0 wiggler.

3×10^{-10} Torr in the beam aperture. If two NEG strips, 3 cm wide × 290 cm long, are inserted into the chamber and activated, the estimated pressure drops to 1×10^{-10} Torr.

As with the undulators, vacuum chamber pressure will be monitored during operation in two ways: Ion pump current will be converted to approximate pressure at the local display, and accurate pressure measurements will be taken at one or two locations with nude ion gauges and an ion gauge controller.

The vacuum chamber and the associated pumping system are supported from the top of the wiggler support structure, as shown in Fig. 3-17. The vacuum chamber is supported by six struts; floating support from the top of the support structure is provided for the ion pump assemblies so that they do not load the vacuum chamber.

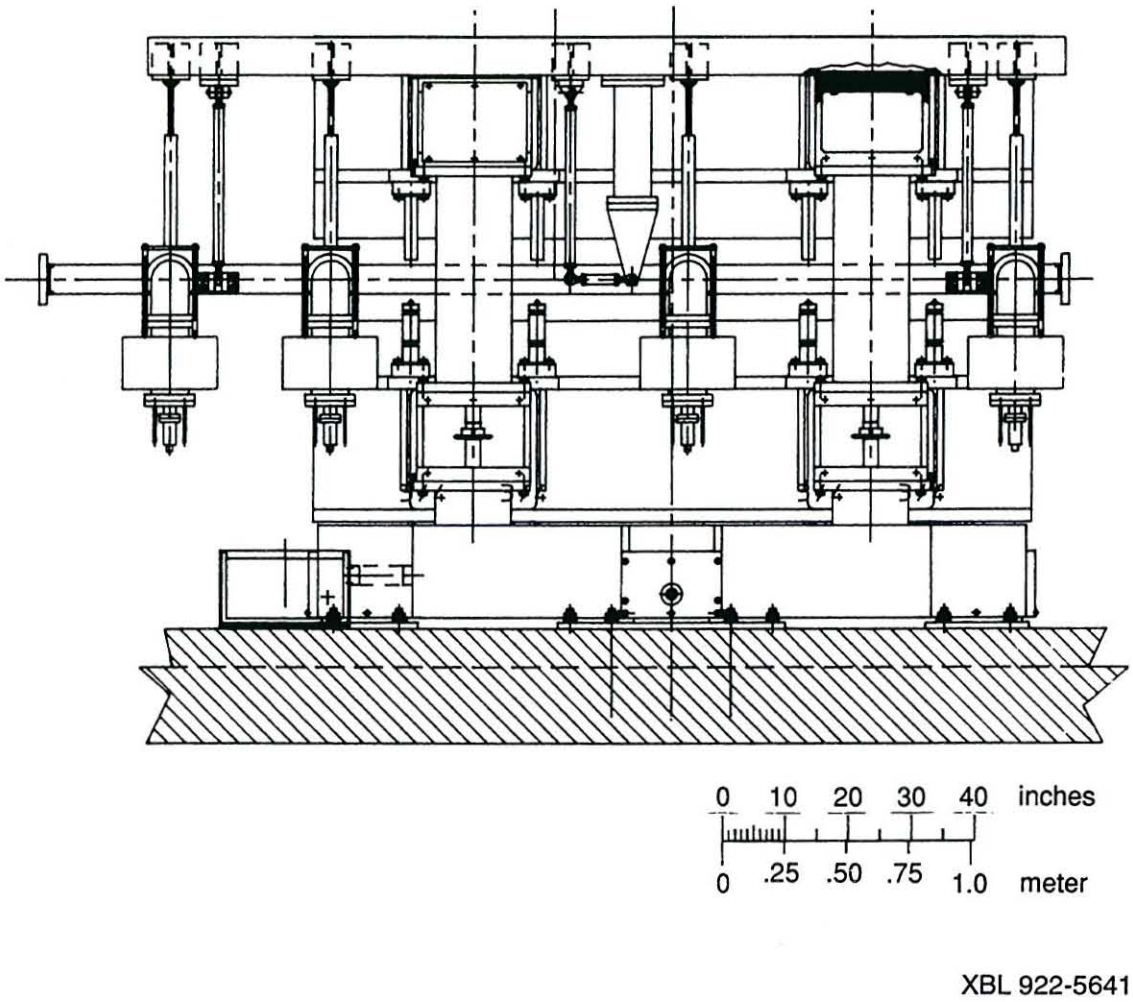

Figure 3-17. Elevation view of the vacuum chamber and pump support system.

4.

BEAMLINES

The initial complement of experimental facilities for the ALS includes two undulator beamlines, one for a 5-cm-period undulator and one for an 8-cm-period undulator Detailed beamline design documents for these beamlines have been prepared [Warwick, DiGennaro, and Howells, 1989a and 1989b] based on the use of water-cooled, spherical optics, as described below. Engineering design of these beamlines is complete. Installation of the U5.0 undulator beamline is complete, and installation of the U8.0 beamline is well under way. The designs of these ALS-constructed undulator beamlines contain many generic features. The scope of experimental facilities for the project described here includes beamlines for an 8-cm-period undulator and bend-magnet two-photon source, for a 10-cm-period undulator, a 3.65-cm-period undulator, a crossed-field undulator that produces circularly polarized photons, and a 16-cm-period wiggler.

4.1 BEAMLINE CHARACTERISTICS

In the period since scientific experiments began with synchrotron radiation, the development of dedicated storage rings and insertion devices has greatly advanced light-source technology. During these years, there have also been corresponding developments in optical systems for handling the photon beams. The advances in storage-ring and insertion-device technologies have created new challenges for the optical designer, especially in two areas:

- The source size has become smaller, so relay optics require tighter tolerances to avoid loss of light. The use of smaller slits also becomes practical, so monochromator components also need tighter tolerances to avoid loss of resolution. These tolerances apply to both the figure and the finish of optical components.
- The photon beam power has increased to the point that, in addition to satisfying more stringent surface tolerances, optical components must be cooled to control thermal distortions and stresses. This complicates the design and limits the choice of materials.

These factors, combined with exacting user requirements, make beamline design a particular challenge. LBL has played a leading role in the design and use of both high-power wigglers and undulators—a role that included LBL's involvement with Exxon and SSRL in the construction of the 54-pole wiggler and Beamline 6 at SSRL. The chief conclusion from that activity, confirmed by studies at LBL and elsewhere, was that when a large heat load is present it dominates the design and cost of the beamline.

The difficulties of dealing with large heat loads have increased the level of interest in the properties of undulators, which usually generate less total power than wigglers. In addition, because undulators are tuned to produce radiation at the required wavelength on-axis, most of the unwanted power can be dumped in a robust, nonoptical aperture (a pinhole, for example), which is a great advantage. The power problem is usually moderate: At worst, the problem is similar to that faced with the 54-pole Beamline 6 wiggler. Our strategy for dealing with it is to use pinholes where appropriate, plus active water cooling of the optics.

The most serious problem now faced by the beamline designer is optical fabrication tolerances of grazing-incidence optics. It has been observed that even in present-generation storage rings, such as NSLS and BESSY, the fabrication accuracy of aspheric optical surfaces (paraboloids, ellipsoids, toroids, etc.) for use in mirrors, monochromators, and other applications is inadequate for taking full advantage of the source properties. Although manufacturing methods are improving, the only sure way to address this problem would be to avoid the use of aspheric surfaces altogether and to build beamlines entirely with plane and spherical surfaces. All the important optical technologies for figuring, finishing, and measuring work best in these cases. Furthermore, one can infer from the demonstrated resolution of certain existing monochromators that fabrication tolerances below one microradian have been achieved for standard spherical gratings. Unfortunately, this ideal solution lacks some of the flexibility that aspheric optics provide, thus placing significant limitations on the options for laying out specialized beamlines. We have thus adopted a compromise philosophy in undulator beamlines, banning aspheric surfaces for resolution-determining optical elements, except at the longest ultraviolet wavelengths where normal-incidence optics can be used, but allowing their use elsewhere.

4.2 U8.0—BEND-MAGNET TWO-PHOTON BEAMLINE COMPLEX

The scope of experimental facilities in the project described here includes a beamline complex comprising a U8.0 beamline and a bend-magnet beamline to provide ultraviolet and soft x-ray photons for the investigation of dynamical phenomena in materials by means of two-photon, pump-probe techniques. Photons from both beamlines illuminate the same sample. A multiple-mirror reflective system with rotating and/or translating mirrors makes it possible to control the interval between the arrival of a bend-magnet pulse relative to that of an undulator pulse from coincidence to the time between electron bunch of 2 ns.

4.2.1 U8.0 Beamline

The detailed design document available for the U8.0 beamline that is part of the initial complement of ALS experimental facilities [Warwick, DiGennaro, and Howells, 1989b] provides the basis for this beamline, and we provide here only a summary of the beamline's essential features and the design issues they address. Major beamline parameters are tabulated in Table 4-1.

As shown in Fig. 4-1, the beamline includes a spherical grating monochromator (SGM) with three diffraction gratings, which can cover the range of photon energies between 20 and 300 eV. The primary branch delivers photons from the undulator first and third harmonics with minimum losses and high resolution. A horizontal focusing mirror is the first optic because the large K values at which the U8.0 undulator will operate require horizontal focusing before the monochromator to maintain reasonable apertures. This mirror, which is also a power filter, absorbing photons at energies above the operating range, will generate a horizontal focus at the sample. A demagnified vertical image of the source (demagnified by a factor of about 8) will be formed on the monochromator entrance slit, on the exit slit, and at the sample. In addition to the primary branch, deflection mirrors could be introduced to generate secondary branches, which would bypass the SGM. A straight-through branch for white light could also be

Table 4-1. Design parameters for the optical components in the U8.0 beamline. The assumed energy range is 20-300 eV; $K_{max} \approx 7.3$ and $\sigma'_{max} \approx 160$ μrad.

Parameter	Horizontal condensing mirror	Vertical condensing mirror	Diffraction grating
Coating	Carbon, nickel	Nickel	Gold, nickel
Grazing incidence angle (deg)	3	4.5	–
Deflection angle (deg)	–	–	15
Distance from source (m)	15	18.5	21.15
Tangential radius (m)	299.5	28.73	15
Footprint			
Horizontal, 2.35σ (mm)	108	6.96	3.32
Vertical, 2.35σ (cm)	5.64	887	Varies
Incident power (W)	450 (4σ)	20 (4σ)	10 (2.35σ)
Absorbed power (W)	430 (4σ)	5 (4σ)	4 (2.35σ)
Allowed rms slope error (μrad)	5.50	0.85	0.8

For the entrance slit, 19.7 meters from the source, $\sigma_h = 1.64$ mm, $\sigma_v = 4.20$ μm; for the exit slit at the Rowland wavelength, 24.9 meters from the source, $\sigma_h = 0.82$ mm, $\sigma_v = 4.20$ μm.

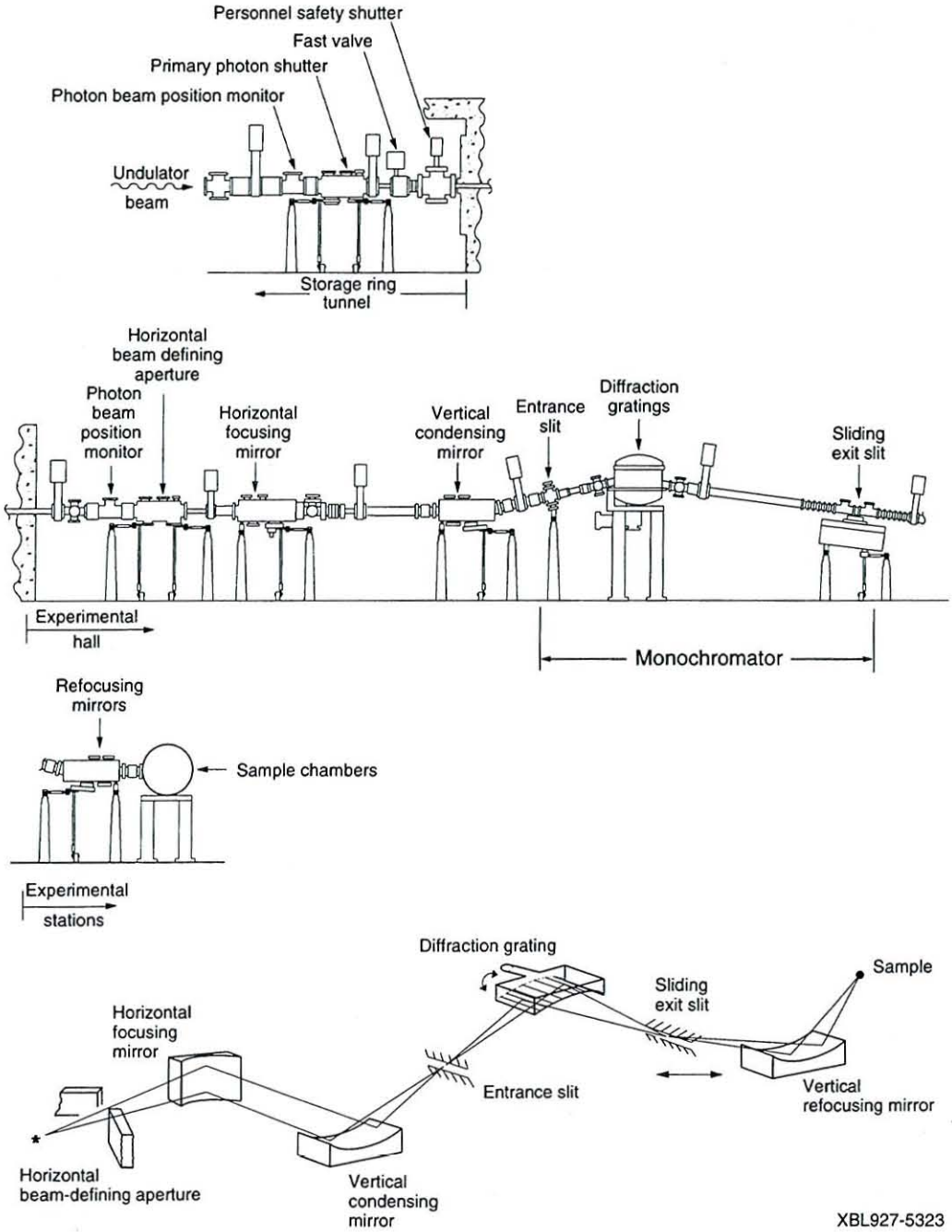

Figure 4-1. Layout for the spherical grating monochromator beamline for undulator U8.0 (top) and a schematic illustration of the photon beam path through the optical components. The front-end components shown in the upper half of the top illustration will be identical on all ALS beamlines.

implemented by removing the horizontal and vertical deflecting mirrors, an option that may be of particular interest for providing high fluxes of photons at energies up to about 8 keV with the undulator gap closed (K = 7.3) at the minimum gap permitted for undulator 8.0. When the undulator gap is closed, the beam will be dominated by high-energy photons from harmonics higher than the fifth.

The following paragraphs briefly describe the components of the U8.0 beamline, from the front-end through a refocusing optic after the monochromator exit slit.

Front End. With the exception of a photon beam position monitor (BPM), the front-end systems are intended to protect the beamline equipment, storage ring vacuum, and personnel. All front-end components are located inside the storage-ring shielding, as shown in Fig. 4-1.

A gate valve at the exit of the storage ring vacuum chamber allows the beamline to be isolated from the storage ring when there is no stored beam. This permits the BPM and the primary photon shutter to be serviced without bringing the ring up to atmospheric pressure. The fast valve, isolation valve, and water-cooled primary photon shutter act together to protect the storage ring vacuum against accidents in the beamline. The water-cooled shutter can be closed to intercept the synchrotron radiation beam, and when the shutter is closed under normal conditions, the isolation valve provides vacuum isolation. The fast valve protects the storage ring from the effects of an accidental loss of beamline vacuum.

Personnel protection is ensured by an additional safety shutter that operates in concert with the water-cooled primary photon shutter. These two shutters can be opened only after all safety requirements are met, namely:

- Beamline safety keys in place
- Hutch radiation doors closed (if applicable)
- Beamline radiation monitors okay (if applicable)
- Good beamline vacuum
- Accelerator control system permission received
- Other applicable controls okay (beamline gate valves open, water-cooled optics okay, etc.)

The request for the shutters to be opened can be initiated only by the user at the beamline.

Photon Beam Position Monitor. The photon BPMs (one inside the shielding, one in the experimental hall) provide information on the position and angle of the electron beam at the center of the insertion device, to within 10% of its rms size and divergence. They do this by providing an error signal to indicate deviations in the position of the photon beam from the center of the position-sensitive detector in the vertical and horizontal directions. Taking into account the combined effects of detector resolution and electrical and

mechanical drift, we expect a capability of continuously measuring the photon beam position over a 24-hour period with an rms error of better than ±2 μm, over a bandwidth from DC to several hundred hertz, provided that the detectors are mechanically stable against vibration, ambient temperature changes, and radiation heating to about 1 μm rms.

Horizontal Beam-Defining Aperture. The adjustable, water-cooled, rectangular beam-defining aperture will normally pass the entire central cone of the undulator radiation and be set to illuminate the first mirror to minimize thermal distortion and reduce thermal loads at the entrance slit. This aperture may also be used to select radiation off-axis—for example, to select the second harmonic of the undulator for use in a branch line. It therefore comprises four independently movable blades. The spectral flux passing through the beam-defining aperture, for two rectangular aperture sizes, is shown in Fig. 4-2. The computed spectrum includes the effects of electron beam emittance [Jacobsen, 1985]. These are the photons that, under typical operating conditions, will be reflected from the condensing mirror and introduced into the monochromator.

Horizontal Focusing Mirror. As shown in Fig. 4-1, the first optic is the water-cooled horizontal focusing mirror. Upstream of this element, however, a retractable, water-cooled fluorescent screen and a 45° viewport will be provided for visual diagnosis. A photoemission detector can also be used to provide intensity measurements as the beam-defining aperture size and position are varied.

The mirror also acts as a power filter. For this purpose, the mirror has two coatings. A carbon coating is used for the photon-energy range from 20 to 260 eV and absorbs photons at energies above the carbon K-edge at 277 eV. Nickel is used for the photon-energy range up to 300 eV. To switch between the coatings requires the mirror chamber to have a vertical translation capability.

The mirror images the source horizontally at the sample 30 meters from the source. The focal length is chosen to allow for the small amount of sagittal focusing provided in the horizontal plane by the vertical condensing mirror and the diffraction grating. A 3° grazing incidence angle was chosen, giving reflectivities from a carbon-coated surface of about 90% and from a nickel-coated surface of about 75% over their respective photon-energy ranges. Slope errors are derived by requiring no significant enlargement of the image. For the mirror in the tangential plane, the slope tolerances are moderately severe with the rms slope error $\Delta = 5.50$ μrad. In the sagittal plane, the slope tolerances are relaxed to $\Delta = 20.06$ μrad. To prevent image broadening by diffraction and to reduce scattered light, the rms surface roughness must be 5 Å or less.

This mirror is 15 meters from the source and must have a minimum clear aperture 36.69 cm long (4σ) by 9.60 mm wide (8σ). It is intended to collect light over horizontal angles corresponding to $\pm 4\sigma$ for operation in special cases with large horizontal aperture when it is desired to take advantage of the undulator off-axis red-shift to produce a broader spectral band (10%). Pitch, roll, and translation of the focusing mirror will be adjustable under vacuum.

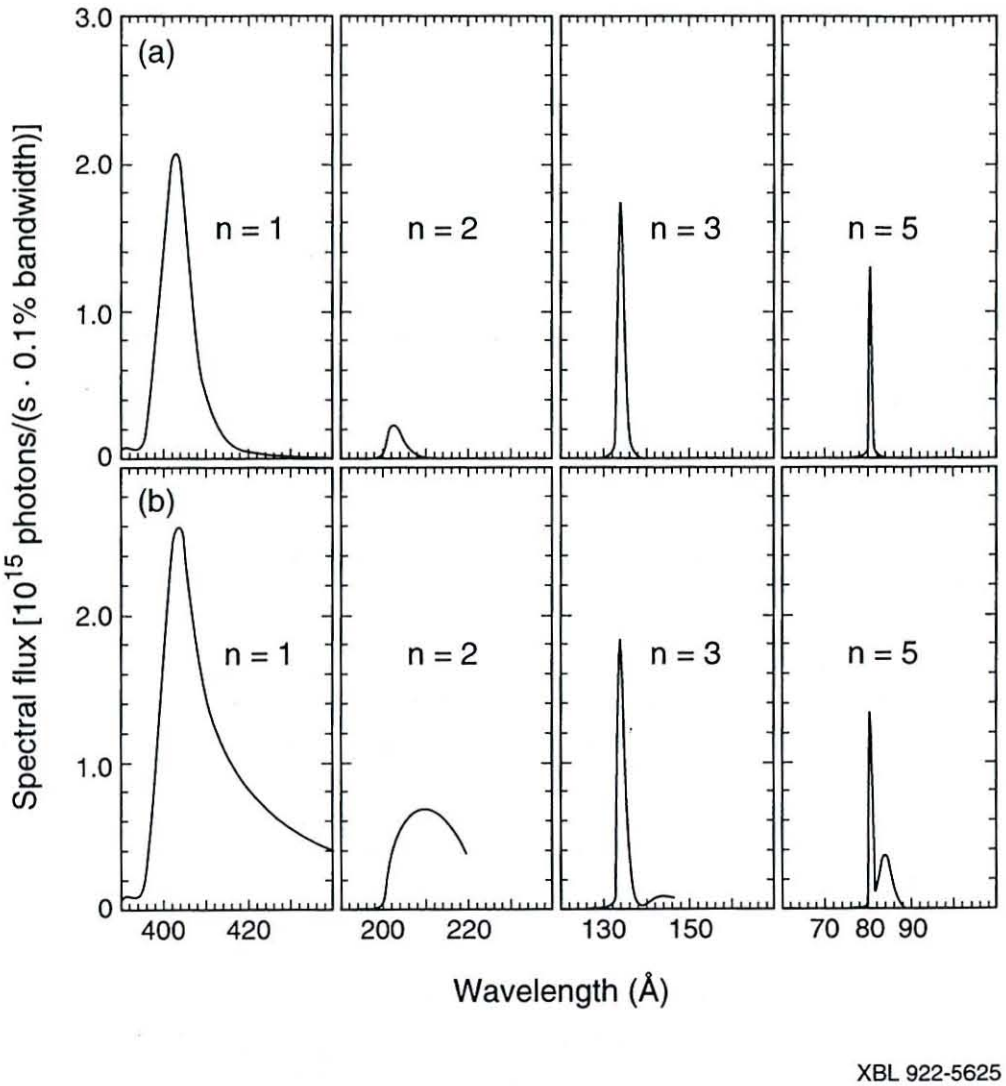

Figure 4-2. Spectral flux passed by the beam-defining aperture on the U8.0 beamline for two aperture sizes: (a) $2\sigma \times 2\sigma$ and (b) $8\sigma \times 2\sigma$. The first, second, third, and fifth harmonics are shown.

Vertical Condensing Mirror. The water-cooled spherical condensing mirror has a demagnification of 8 and generates a vertical image of the source (a horizontal line) at the entrance slit of the monochromator. The requirement is simply to get most of the photons into the monochromator, which has an entrance slit as narrow as 5 μm in the vertical direction. A 4.5° grazing incidence angle was chosen, giving a reflectance from a nickel-coated surface of about 70% up to 300 eV, except for an 18% dip near the nickel 3p edge at 68 eV. Smaller grazing incidence angles would give better reflectivity but a longer

mirror, which, if built as a cylinder or a sphere, would suffer from unacceptable coma aberrations. Slope errors are derived by requiring no significant enlargement of the image. For the mirror in the tangential plane, the slope tolerances are severe with the rms slope error $\Delta = 0.85$ μrad. In the sagittal plane, the slope tolerances are relaxed to $\Delta =$ 56.84 μrad. To prevent image broadening by diffraction and to reduce scattered light, the rms surface roughness must be 0.5 Å or less.

This mirror is 18.5 meters from the source and must have a minimum clear aperture 15.09 cm long (4σ) by 23.68 mm wide (8σ). For this mirror, and the similar elements of other beamlines, we are investigating the possibility of fabrication from bent metal flats.

Pitch, roll, and translation of the condensing mirror will be adjustable under vacuum. In addition, it will be possible to make small changes to the vertical photon beam deflection from this mirror under feedback control from a photon position detector downstream. Small vertical motions of the source image on the monochromator entrance slit can thus be eliminated interactively. A piezoelectric pusher will be used to cause rotations about the horizontal axis in the reflecting surface (pitch) up to a few tens of microradians.

Entrance Slit. The adjustable entrance slit opens and closes to give a vertical aperture from 5 to 500 μm. It need not translate longitudinally. It also performs as a photon BPM to allow the focused image of the source to be steered through. By electrically isolating the blades and providing a sweeping field for photoelectrons, signals will be generated that indicate the vertical position and size of the beam. This will also be the origin of the error signal required by the feedback loop acting on the deflection angle of the vertical condensing mirror.

The entrance slit aperture must undergo thermal distortion of less than 1 μm, when subjected to the maximum-power photon beam transmitted by the deflecting mirror (15 W), vertically focused on the slit ($\sigma_h = 1.60$ mm, $\sigma_v \leq 4.20$ μm).

Monochromator. The monochromator must span the range of photon energies from 20 to 300 eV, and the photon deflection angle must be small enough to ensure acceptable reflectivity at 300 eV. Our solution was to use three gratings, each giving the same fixed deflecting angle (15°). The disadvantage of this design is less-than-optimal overlap among the corresponding three photon energy ranges where good resolution and efficiency are possible. As mentioned above, the monochromator vessel includes ports to allow the undeflected white light to pass through the tank below the grating assembly.

The finest grating, for use up to 300 eV, is coated with a nickel optical surface. The other two gratings, for use up to about 60 and 140 eV, respectively, take advantage of the more uniform reflectivity of a gold optical surface at these energies. The gratings are used in positive order to avoid large motions of the exit slit, which moves to stay at the focus of the grating as the grating rotates. The line spacing of the coarsest grating (385 lines/mm) was chosen so that the horizon wavelength (885Å) is beyond the bottom end of the energy range of interest (20 eV). The horizon wavelength (378.6Å) and the line

spacing (990 lines/mm) of the second grating are thereby indicated. The third grating is likewise specified (λ_h = 162.3Å, 2100 lines/mm).

So that the curves of diffraction efficiency versus photon energy are broad enough to ensure overlap between the three gratings' efficiencies, the ruled profile must be laminar. The groove depth is adjusted to give peak first-order efficiency in the middle of the energy range. The resulting groove depths are 550, 233, and 100 Å for 385, 900, and 2100 lines/mm, respectively. The ruled length of each grating is 14 cm; each will be overfilled at some wavelengths. The allowed rms slope error is $\Delta = 0.8$ μrad.

The calculated throughput for each grating is shown in Fig. 4-3 [Heimann, 1991]; the resolved flux is computed as the width of the entrance slit is varied to fix the slit-width-limited resolving power at 10,000. The calculations that underlie this figure are based on the predicted flux from the undulator, using the first or third harmonic, whichever is most intense. They include mirror absorption and a diffraction efficiency for square-wave gratings, in first order, with shadowing [Bennet, 1971]. The calculations also take account of losses at the entrance slit due to spherical aberration of the vertical condensing mirror and the size of the demagnified image of the source, but they ignore aberrations at the diffraction grating, which reduce the resolution and may allow the slits to be opened, thereby increasing the resolved flux.

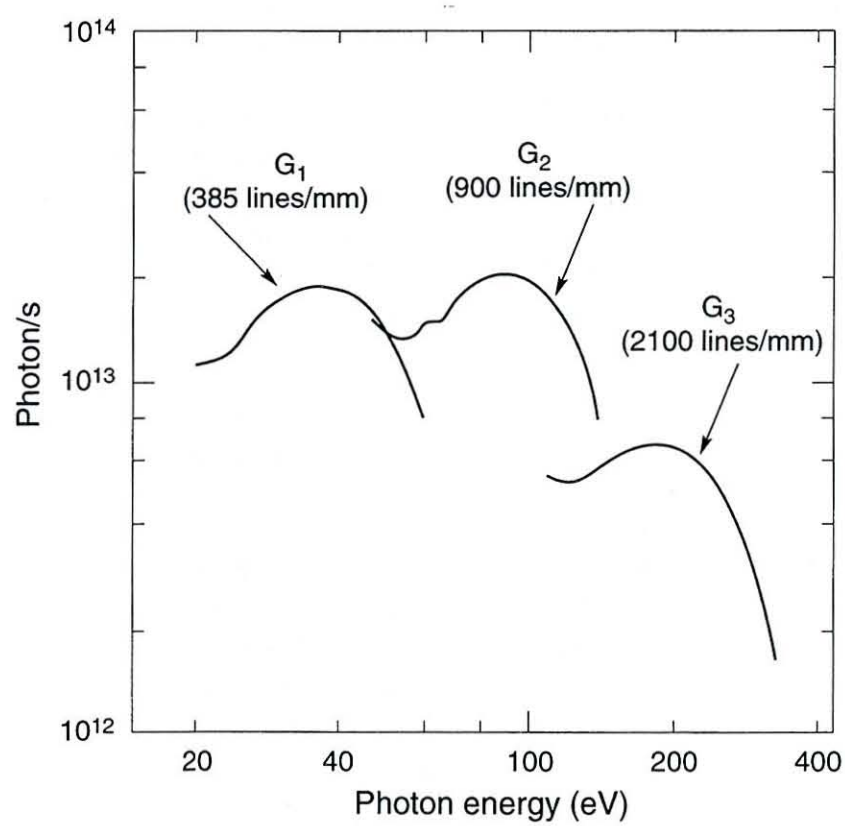

Figure 4-3. Plot of resolved flux as a function of photon energy, for the three gratings of the U8.0 beamline monochromator.

It is impractical to stay on the Rowland circle at all wavelengths, because this requires a moving entrance slit, which implies changing the focal length of the vertical condensing mirror or changing the throughput at the entrance slit—neither an acceptable option. Instead, we operate on the Rowland circle for only one wavelength, and only the exit slit moves to give zero defocusing as the grating rotates. The distance from the grating to the exit slit varies from 3.745 meters at the Rowland wavelength to about 4.6 meters. The penalty for a fixed entrance slit is nonvanishing coma aberration from the grating and motion out of the field of the refocus optic.

The resolution of the monochromator was computed analytically, as a function of wavelength, including the geometrical aberrations of the spherical grating and the effects of finite slits [Hogrefe, Howells, and Hoyer, 1986]. These analytical results have been confirmed by explicit ray-trace analyses. The results, shown as the net aberration-limited resolution for each grating, are shown in Fig. 4-4. Coma proves to be the only important aberration.

Exit Slit. The adjustable exit slit is the same as that built for the SSRL Beamline 6 monochromator. It must open and close from 500 to 5 μm and translate up and down the beamline through a distance of 0.75 meter. The exit slit must tolerate the zeroth-order diffracted beam without permanent damage. Maximum incident power in zeroth order is about 25 W. Under operational conditions, when distortion must be less than about 1 μm, the zeroth-order light is not incident on the slit, and the incident power is much less.

Vertical Refocusing Mirror. The vertical refocusing mirror collects the radiation diverging from the monochromator exit slit and focuses it on the sample, thereby maximizing the flux of resolved photons for experiments. The spot size is 50 μm full-width-half-maximum, which matches the horizontal spot size. By designing for unity magnification, geometric aberrations are minimized. The radius of the mirror, which is a nickel-coated metal substrate bent into a sphere, is adjustable to focus an image of the exit slit onto the sample at any point within its range of travel. At a grazing-incidence angle of 3°, the radius must change from 35 to 65 meters. A limited scan of the monochromator is then possible until the defocus increases the spot size to more than 50 μm, typically a scan of 5% in photon energy, rising to 20% at the Rowland wavelength where the exit slit motion is changing direction.

Alignment and Positioning Techniques. Detailed alignment and positioning tolerances are discussed in the U8.0 design document [Warwick, DiGennaro, and Howells, 1989b]. Here we broadly summarize the methods that will be used to achieve the required specifications. We use the term "alignment" to refer to adjustments performed prior to operating the beamline. Adjustments made under vacuum with synchrotron radiation incident on the optics are called "positioning."

Alignment and positioning of optics will proceed in three stages as follows:

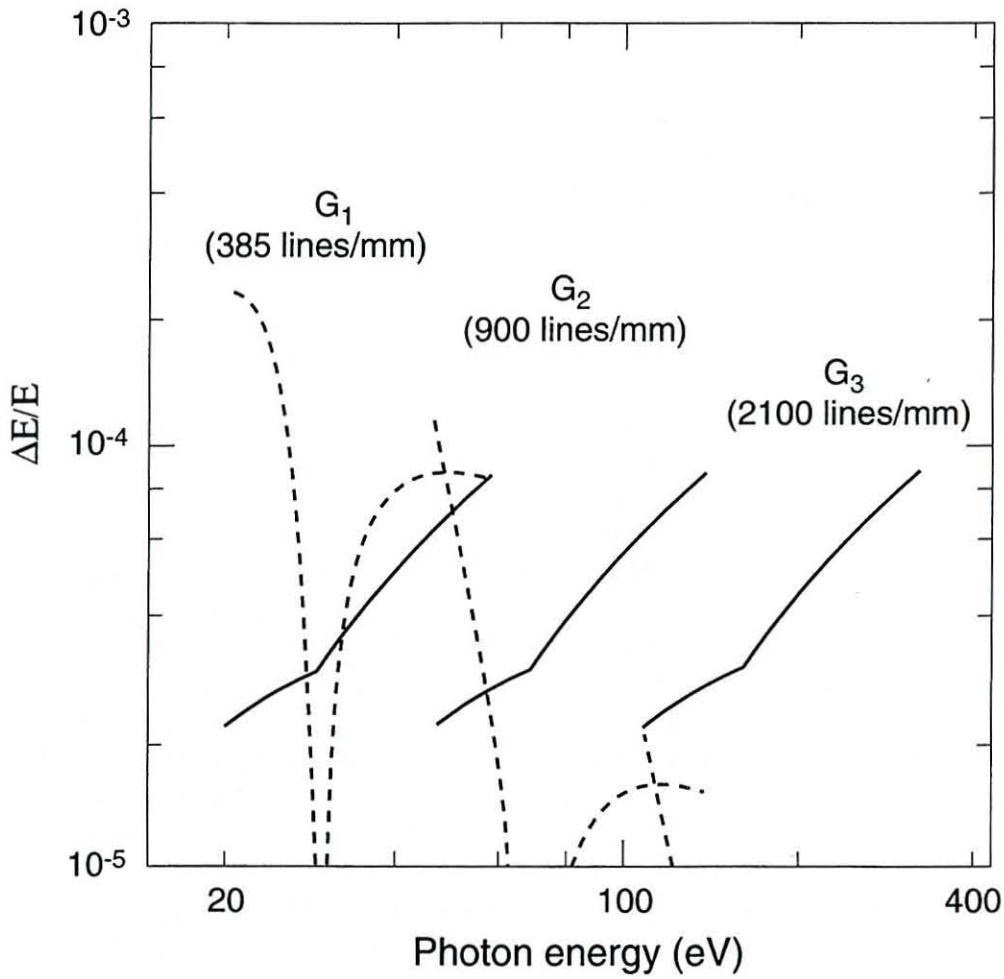

XBL927-5326

Figure 4-4. Plot of resolution as a function of photon energy for the U8.0 beamline monochromator. The solid lines show the resolution contribution of 10-μm slits; the broken lines show the contribution of spherical aberration. Other aberrations are negligible.

- Installation and initial alignment will follow monuments in the experimental floor, typically using tooling balls on the vacuum vessel; precision is about ±150 μm.
- Parameters that cannot easily be set using synchrotron radiation under vacuum will be precisely aligned using a helium-neon laser before evacuation.
- The remaining parameters will be precisely established using the synchrotron radiation itself.

Following installation and initial alignment, the diffraction grating will be precisely aligned by means of a laser reflected and diffracted from the grating. Translation, roll, and pitch of the condensing mirror will be set using the positioning mechanism, with

synchrotron radiation incident on the optic. The focal length of the mirror depends on the pitch angle, and pitch rotations of more than about ±150 μrad will affect the size of the image. If rotations as large as this are required to steer the image onto the entrance slit, then translation positioning of the mirror can also be used. Roll must be set to give a horizontal line image at the entrance slit. These parameters will be adjusted to give maximum transmission through the slit, as indicated by photoemission signals from the slit blades.

4.2.2 Bend-Magnet Beamline

The bend-magnet beamline delivers photons to the same experimental station as the U8.0 undulator beamline just described. As the initial complement of ALS experimental facilities includes no bend-magnet beamlines other than a special-purpose diagnostic beamline, a detailed design document similar to that referenced for the U8.0 beamline [Warwick, DiGennaro, and Howells, 1989b] is not yet available. In general, bend magnet beamlines require that collecting optics be placed close to the source, inside the shield wall, to deliver radiation from a large horizontal collection angle (typically 10 mrad). The broad spectrum of bend magnet radiation from the ALS can serve experiments of various types; beamline designs vary accordingly. For the purposes of this report, we propose a high-resolution beamline that is essentially identical to the U8.0 undulator beamline, with the exception of components necessary to direct the beam onto the same experimental point as the undulator beam and to provide for a controlled, variable time-delay between the arrival of undulator and bend-magnet photon pulses at the sample. In addition, water-cooled optics are not required beyond the first optic, and the horizontal deflection mirror is located inside the storage-ring shielding wall. The source size and divergence are different for the undulator and bend magnet, as shown in Table 4-2, which affects some design details.

Table 4-2. Radiation Source Size and Divergence.

	Source size (μm)	Source Divergence (μrad)
Undulator		
Horizontal	330	30
Vertical	63	16
Bend Magnet		
Horizontal	100	134
Vertical	50	0.75

Front End. With the exception of the photon beam-position monitor, which is absent, the front-end systems are essentially identical to those in insertion device beamlines and are intended to protect the beamline equipment, storage ring vacuum, and personnel [Melczer, 1991]. All front-end components are located inside the storage ring shielding. These components are described in Section 4.2.1 and are illustrated in Fig. 4-1.

Beamline. With the exception of the horizontal deflection mirror inside the storage-ring shielding wall and the absence of water cooling, the beamline systems are essentially identical to those in the undulator beamline. These components are described in Section 4.2.2 and are illustrated in Fig. 4-1. The bend magnet to be used is the first after (immediately downstream from) the undulator and provides a beam centered 6.3° clockwise from the center line of the undulator beam. The first optic is a spherical horizontal deflecting and focusing mirror located 5 meters from the bend-magnet source point inside the storage-ring shielding wall. The mirror deflects the bend-magnet beam 7.855° counter-clockwise so that the beam intersects the undulator beam at a point 30 meters from the source, which is the location of the sample in an experimental end station. We plan to collect ±5 mrad horizontally by ±1.75 mrad vertically. The large vertical collection angle maximizes the bend-magnet intensity at the low end of the photon-energy range. Collection of 10 mrad horizontally at a grazing-incidence angle of 3.92° requires a long 800-mm mirror, which is water-cooled to maintain optical figure under all beam conditions.

Delay Line. Photons from the ALS come in pulses 35 ps long at a repetition rate of 500 MHz, giving a separation between pulse arrival times of 2000 ps. The key piece of hardware for two-photon, pump-probe experiments using this pulsed radiation is the optical delay unit. The purpose of the delay unit is to vary the arrival time of the bend-magnet photon pulse relative to that of the U8.0 photon pulse. The delay of the bend-magnet photon pulse is accomplished by increasing the optical path length. The challenge is optical design is to introduce the necessary path-length increase without changing the beam position on the sample, which in most cases spatially overlaps the position of the U8.0 beam. The four-mirror reflective design shown in Fig. 4-5 eliminates displacement of the outgoing beam, minimizes limitation of the range of photon energies that can pass through the delay unit, and provides a sharp, low-pass transmission cutoff for elimination of higher order radiation.

Four platinum-coated mirrors form the optical system of the delay line. All four mirrors have identical incidence angles for sharpest transmission cutoff and to ensure that the delay line introduces no net beam steering. The two end mirrors M_{d1} and M_{d4} are rotated about their centers, while the two center mirrors M_{d2} and M_{d3} are rotated and translated vertically between 0.3 and 1.44 meters below the beamline. A bellows assembly linked to a linear translation stage provides for this motion. Over the range of motion, the grazing-incidence angles are varied from 3.4° to 15° and the increased path length of the deviated beam grows from 35 mm to 775 mm for a total time delay of just under 2600 ps. The separation between M_{d1} and M_{d4} is 5.5 meters.

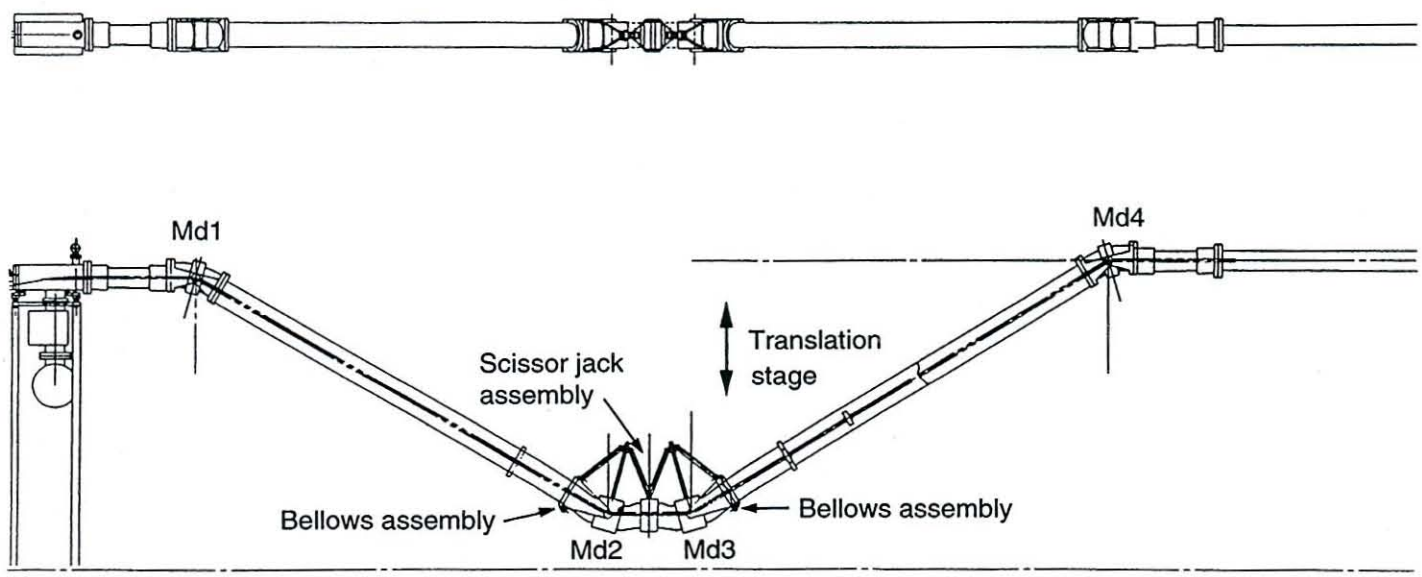

XBL 922-5628

Figure 4-5. Conceptual drawing of the four-mirror reflective optical-delay unit. A vertical translation stage moves the unit up and down, thereby varying the optical path length and the delay time. When not needed, the delay unit can be raised to a position such that the photon beam does not strike any mirrors.

Note that the total delay time is the sum of the time it takes the electron bunch to travel from the undulator to the bend magnet. In the absence of an intentional delay, placement of the horizontal deflection mirror 6 meters from the center point of the bend magnet will result in the bend-magnet pulse arriving at the experimental point about 144 ps after the U8.0 pulse. The additional delays produced by the delay unit are shown in Table 4-3. All factors determining the timing of the two pulses are under the experimenter's control.

Table 4-3. Bend-magnet pulse arrival times.

Additional Delay (ps)	Grazing Angle (deg)	Height (m)
120	3.02	0.300
200	4.42	0.388
500	6.93	0.617
1000	9.68	0.879
1856*	12.93	1.212
2000	13.38	1.261
2579	15.00	1.443

*Additional delay needed for superposition of U8.0 and bend-magnet pulses at the experimental point is 1856 ps.

The light incident on the optical-delay unit is refocused at the nominal midpoint of the unit by a mirror at the exit slit of the monochromator, causing a beam footprint on the delay-line mirrors that varies from 5 cm × 2 cm to 3.5 cm × 2 cm as the incidence angle changes. However, because of the focusing, the beam footprint will not be altered at the exit port of the delay line, thereby allowing the use of plane mirrors and effectively decoupling the delay line optically from the monochromator. When the delay line is not needed, the bellows assembly can be raised to a position where the beam goes through the unit without striking any of the mirrors, another advantage gained by refocusing the beam before the delay line.

Because of the wide range of incidence angles needed to accomplish the delay times specified for the delay unit, the planar mirrors must be quite long, and the cross section of the beam emerging from the delay unit will be quite large. A final refocusing mirror is needed to provide a small area of illumination in the sample plane. The location of the mirror is 0.5 m beyond the delay unit output and 1 m before the experimental point. The mirror will be bendable with adjustable focal characteristics to provide different spot sizes as required by experiments and to account for the variation in source point with delay time.

4.3 U10.0 BEAMLINE

The following paragraphs summarize the design for a U10.0 beamline, as described in the Chemical Dynamics Research Laboratory Conceptual Design Summary [1990]. Such a beamline is suitable for use by researchers in both chemical and materials science.

The four principal requirements for this beamline are:

- A photon energy range of 5-50 eV in the first harmonic. The low-energy end of this range overlaps the capabilities of intense laser sources; the high end allows exploration of valence-shell processes in molecules.
- An intensity of at least 10^{12} photons per second at 0.1% bandwidth.
- High brightness combined with a tightly focused beam. Two-color experiments involving the ALS beam and a laser beam may involve interaction volumes whose linear dimensions are on the order of 50 μm.
- Resolving power of at least 50,000.

Great spectral purity is also needed for many experiments; the ratio of the third harmonic to the first harmonic, I_3/I_1, must be less than 1×10^{-5}.

These requirements must be satisfied within certain practical constraints, many of which arise from the undulator. To obtain wide spectral coverage, one must use a wide range of undulator K values. For large K, the undulators generate substantial radiation flux at high harmonics (the higher orders scale as K^3), and the beamline optics must be able to handle this extra radiation. For reasons associated with ALS beam dynamics, the maximum magnetic field required to produce the photon characteristics outlined above must be less than the bending-magnet field (1.04 T). The U10.0 undulator will meet the user requirements by producing radiation that has the following characteristics at the source (central cone, diffraction-limited, at 1550 Å):

- Beam size: $\sigma_H = 800$ μm, $\sigma_V = 220$ μm.
- Divergence = 450 μrad
- Brightness = 5.7×10^{16} photons/s/mm^2/mrad^2 at 0.1% bandwidth.

To meet the user requirements and take advantage of the characteristics of ALS radiation, the U10.0 beamline was designed for high throughput, high resolving power, small focused image, and wide energy range.

Front End. The front end systems are identical to those described in Section 4.2.1 for the undulator U8.0 beamline.

Beamline Layout and Components. The layout of the U10.0 beamline is shown schematically in Fig. 4-6. The design includes two grazing incidence mirrors (M1 and M2) whose role is partly to condense the beam onto the entrance slit of the

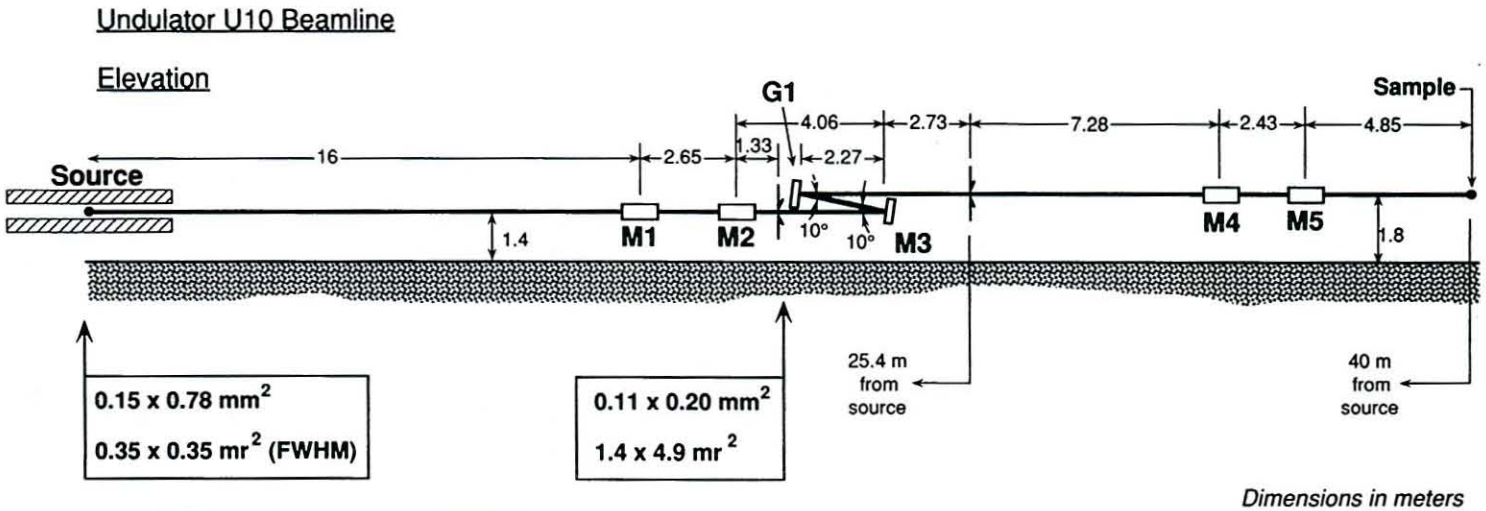

NAME	SHAPE	MAGNIFICATION	FOCUSING DIRECTION
M1	Sphere	0.25	H
M2	Cylinder	0.071	V
M3	Flat		V
G1	Spherical	~1	Both
M4	Cylinder	1	V
M5	Sphere	0.5	H

Figure 4-6. Layout for the U10.0 beamline. The front-end components (not shown) will be identical on all ALS beamlines.

monochromator and partly to absorb the large power that will be present in the undulator beam at photon energies outside the range needed for experiments. The monochromator is of the McPherson type, which can be obtained commercially from several different vendors The mirrors M1 and M2 and the normal-incidence mirror M3 absorb sufficient power that the grating G need not be water-cooled. The two condensing mirrors, M4 and M5, are needed to deliver the monochromatic beam to the sample at the right location in three dimensions.

Tables 4-4 and 4-5 list the parameters of the optical components within the beamline.

Table 4-4. Parameters for the monochromator gratings in the U10.0 beamline.

Parameter	G1	G2
Grating groove density (lines/mm)	1200	2400
Grating radius (m)	5	5
Reciprocal linear dispersion (Å/mm)	1.69	0.85
Slit-width-limited resolution, first-order, with 10-μm slits (Å)	0.016	0.008
Maximum wavelength at 10° from $\lambda = 0$ (Å)	2883	1441

Table 4-5. Parameters for the mirrors in the U10.0 beamline.

Parameter	M1	M2	M3	M4	M5
Surface shape	Spherical	Cylindrical	Flat	Cylindrical	Spherical
Tangential radius (m)	3.2	∞	∞	∞	3.2
Sagittal radius (m)	3.2	0.13	∞	0.38	3.2
Length (mm)	150	100	3	300	350
Width (mm)	50	50	3	80	80
Incidence angle (deg)	87	87	5	87	87
Magnification factor	0.25	0.071	n/a	1	0.5
Inward conjugate (m)	16	18.66	n/a	7.28	9.71
Outward conjugate (m)	4	1.33	n/a	7.28	4.85
Focusing plane	Horizontal	Vertical	Vertical	Vertical	Horizontal
Coating	Carbon	Carbon	SiC	Carbon	Carbon

Output Flux and Geometry. The phase space of the photon beam at the interaction region, when the beamline is set for a slit-width-limited resolution of 0.016 Å with a 1200-lines/mm grating (10-μm slits), is 0.011 × 4.9 mm·mrad (vertical) and 0.1 × 2.8 mm·mrad (horizontal). These figures are the Gaussian optics values, which are expected to be good in general, but in some cases, the astigmatic focal line length may be larger than the quoted horizontal spot size. As described below, this can be corrected if it is considered important. The effects of optical fabrication tolerances and aberrations have not been allowed for, and they might be expected to produce some degradation of the quoted values for the vertical spot size.

For the photon fluxes emitted by the U10.0 undulator, the output does not vary much over the spectral range of interest. The same is roughly true for the reflecting efficiency of the carbon and SiC coatings we propose. For the optical systems described here, with the ALS operating at 400 mA and 1.5 GeV, we obtain:

for $\Delta\lambda/\lambda = 1/50{,}000$: 3×10^{11} photons/s
for $\Delta\lambda/\lambda = 1/44$: 3×10^{14} photons/s

Other Design Issues. Some of the issues that guided design decisions bear further discussion. These include astigmatism, suppression of unwanted higher-order radiation, and the high heat loads associated with synchrotron radiation beamlines.

Astigmatism. The main aberration of the monochromator system described above is astigmatism. Instead of producing a focal point at the exit slit, the system produces a focal line. This defect does not affect resolution, but it must be taken into account in matching the focal spot from the ALS to an interaction region defined by, for example, a molecular beam. For the U10.0 beamline, calculations show that the length of the focal line reaches its maximum value (1/13 of the length of the illuminated part of the grating grooves) at the maximum output wavelength. This means that the line length is always less than 0.5 mm, usually much less. For many purposes this will be negligible.

Higher-Order Suppression. The requirement that higher diffracted orders be less than 10^{-5} times the intensity of the first order cannot be met with any conceivable design based on optical considerations alone. The problem is particularly serious for the spectral region of interest here because, at the ALS electron energy, undulators must operated at high magnetic fields to generate low-energy photons in the first harmonic. As a consequence, the higher-order radiation is generally more intense than the desired radiation.

Nonetheless, we have made the best possible use of the optical factors that can be used to discriminate against higher orders, namely, reflection filtering and a laminar grating with a mark-to-space ratio of unity. This is quite effective near the normal-incidence reflectance threshold of the SiC reflection surfaces used on most of the optical components. However, it becomes so ineffective at wavelengths greater than twice the threshold that second and third orders may constitute as much as 10% of the total output.

To obtain an improved rejection of the higher orders, it will be necessary to use absorption filters. For the windowless U10.0 beamline, that means the use of gas filters.

To implement such a scheme, we first note that there is in any case a need to have considerable differential pumping between the sample chamber, which may contain a gaseous sample, and the beamline, which must be kept at ultrahigh vacuum. The introduction of gas filtration is thus a natural extension of the design of the differential pumping system. The proposed design is shown schematically in Figure 4-7. The absorber gas, one of the noble gases, is introduced into one of the three sealed, rectangular apertures and is kept at a pressure of, say, 0.5 Torr. A system with the geometry shown transmits less than 10^{-6} of the incoming high-order photons, provided the correct gas is chosen for the prevailing spectral region.

Heat Loads. The heat loads on the first mirror of the U10.0 beamline have been calculated by assuming that only the central-cone radiation from the undulator is needed (and that radiation outside the central cone is therefore not accepted) and that the undulator gap is set to give a first harmonic photon energy of 6 eV. This is the worst case in terms of beam power. As a result, although the total output power of the undulator is 1.98 kW, the beamline accepts only 96 W; 93 W is absorbed by the first mirror. We can therefore assume that the thermal design issues posed by this beamline are similar to, or less severe than, the ones already resolved by the ALS engineering staff for other beamlines.

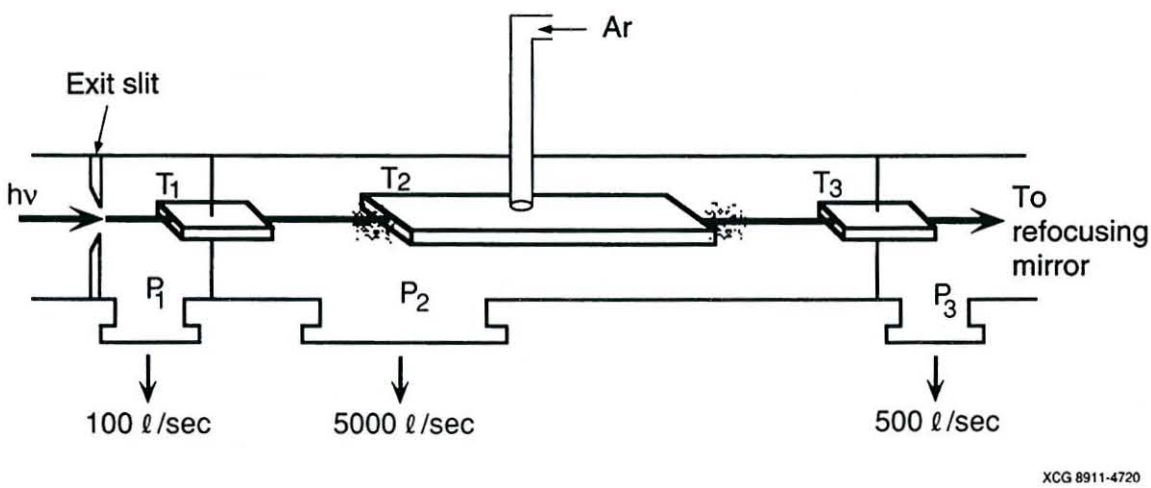

Figure 4-7. Differential pumping scheme for the U10.0 beamline.

4.4 U3.65 BEAMLINE (WITH MICROSCOPE)

4.4.1 Beamline

As a third insertion-device beamline for this baseline complement of experimental facilities, we selected another of the beamline concepts outlined in *An ALS Handbook* [1989]. The U3.65 beamline is designed to provide radiation that is fully spatially coherent and sufficiently monochromatic for soft x-ray imaging experiments. This latter requirement is satisfied by having a monochromator with resolving power $\lambda/\Delta\lambda$ of about 1000. We describe a way to achieve this below; it is not a demanding requirement. Spatial coherence is achieved by means of spatial filtering, which is easy to do, and which will not cause a large loss of flux for an ALS undulator source, because these devices are close to diffraction limited (single mode) and deliver correspondingly high average coherent power. For the purpose of this design, the most important x-ray wavelengths were chosen to be between 7.5 and 70 Å.

The beamline includes a spherical grating monochromator of a type that is becoming quite standard in present-day synchrotron radiation practice [Chen, 1987]. The monochromator includes a single grating. In what follows, we focus on a grating with 300 lines/mm, working in negative order, and using the source as the entrance slit. After some power-reducing apertures, the beam from the source impinges on the grating as the first element, which is therefore intensively water-cooled. The instrument is fully tunable source over the wavelength range 7.5–70 Å. Wavelength is scanned by simple rotation of the grating, and the depth of focus of the system, utilizing the undulator central cone, is such that the beam suffers negligible defocusing over its entire operating range of 7.5–70 Å. For a sufficiently well-made grating, the resolution is diffraction limited—or source-size limited, which is the same thing for a single-mode source. The throughput and resolution of the system are given in Table 4-6 and Fig. 4-8.

The choice of this type of system was dictated by a desire for the highest efficiency, tolerance to overall system geometrical instabilities, and a moderate resolution requirement. The simplicity of the system derives, in part, from the low numerical aperture of diffraction-limited soft x-ray beams. The optical fabrication tolerance involved is around one second of arc, which is quite severe, but it must only be held over an area of 1 mm × 24 mm, the size of the footprint of the central cone on the grating.

A major reason for choosing a design for this scheme that has no entrance slit is its tolerance to moderate-sized movements of the source. For vertical movements, the effect is a shift of the wavelength scale. For horizontal ones, the intermediate image of the source and the final image in, for example, a scanning microscope will move by the same fractional amount that the source moved. For example, suppose the source is displaced vertically by one standard deviation of its Gaussian spatial distribution, that is, about 60 μm, or about 40% of its full width. This would give a wavelength shift of 40% of the resolution function width (5×10^{-4} nm or $\lambda/6000$ at 3.0 nm). Now consider a horizontal shift of the same absolute amount, which is 20% of a horizontal standard deviation. In this case, the affected sample pixels would suffer a displacement of 20% of their width.

These are small effects for fairly large perturbations of the beam. Had we chosen to use a real entrance slit (as opposed to using the source as the effective slit) or a real pinhole at the intermediate focus, then the source movements discussed above would have led to large (up to 35%) changes in the throughput of the system.

4.4.2 Microscope

The x-ray microscope development work that has taken place in the U.S. has focused to a considerable extent on the scanning x-ray microscope (the x-ray analog of the scanning light or electron microscope) [Kirz and Sayre, 1980]. This type of system has the advantage of delivering the minimum possible dose to the sample and of being naturally suited to quantitative chemical microanalysis and computerized image processing. We plan to take advantage of the experience gained in this technology by the activities of, among others, the State University of New York at Stony Brook group in operating scanning microscopes at the National Synchrotron Light Source. However, we plan to build the microscope so that the conversion to an imaging microscope would be straightforward, should it be required in the future.

The scanning x-ray microscope, like its cousins using light or electrons, operates by first forming, by means of a lens, a finely focused probe, which is held stationary and whose position defines the focal plane of the instrument. The instrument operates by scanning the sample in a raster pattern (as in the formation of a television picture) thorough the focal plane. The image is accumulated and stored in a computer by counting x-rays at each point of the raster and using the x-ray counts as the strength (gray level) of the picture at that point. Alternatively, one can count the number of secondary photoelectrons emitted from the surface at each point, since the yield of secondary

Table 4-6. Resolution for the spherical grating monochromator in the U3.65 beamline. The assumed grating has 300 lines/mm.

Wavelength (nm)	Resolution (nm), lower beam	Resolution (nm), upper beam
0.7	0.0009	0.0011
1.0	0.0009	0.0012
1.5	0.0010	0.0012
2.0	0.0010	0.0012
3.0	0.0011	0.0013
4.0	0.0012	0.0014
5.0	0.0013	0.0015
6.0	0.0014	0.0016
7.0	0.0016	0.0016

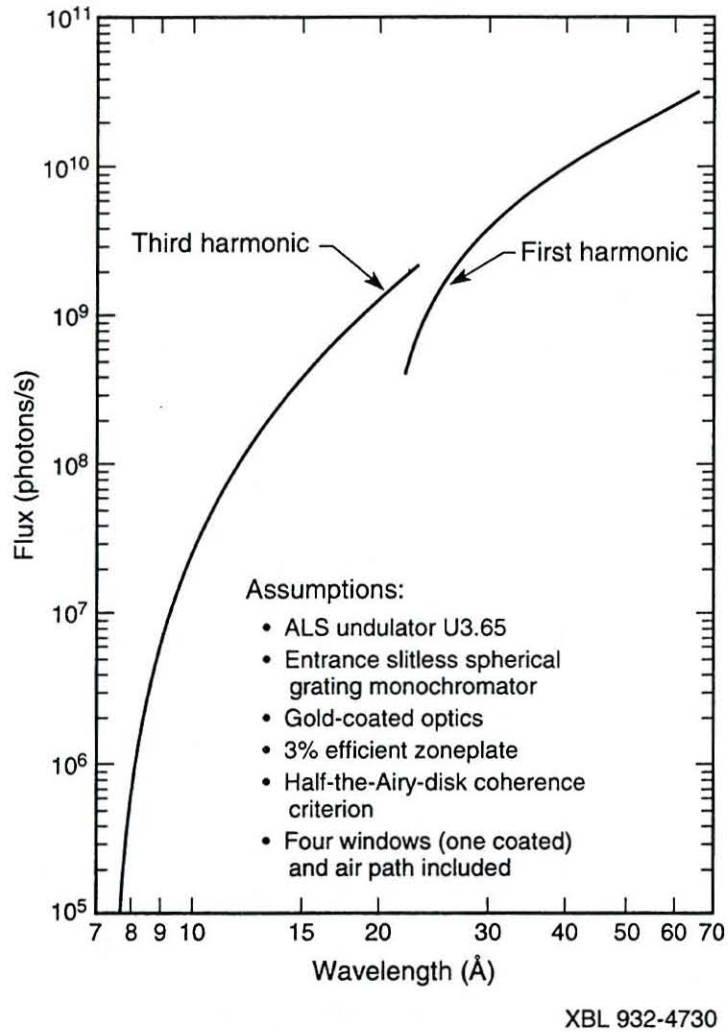

Figure 4-8. Plot of the U3.65 undulator beamline output onto a zone plate focal spot, as a function of wavelength.

electrons is proportional to the number of absorbed x-rays. The x-ray beam is focused by means of a Fresnel zone plane lens [Vladimirsky et al., 1988]. The smallest possible focus is roughly equal to the spacing of the narrowest lines at the edge of zone plate. The obtainable resolution of these device is thus determined by the quality of the available microfabrication capability for making zone plates.

4.5 UX BEAMLINE

The technical requirements for the UX beamline depend upon the nature of the insertion device proposed and the experimental program it supports. For the purposes of this document, a beamline identical to that associated with the U8.0 undulator is adopted. This beamline is consistent with the UX undulator described in Section 3.5 and with the

general requirements for research using circularly polarized ultraviolet and soft x-ray radiation over the 20- to 300-eV photon-energy range in materials science, atomic and molecular physics, and biology. The U8.0 beamline is described in Section 4.2.1.

4.6 W16.0 BEAMLINE

The technical requirements for the wiggler beamline depend upon the nature of wiggler radiation and the proposed experimental program. Owing to the wide fan of radiation generated by a wiggler, some details of the front end of a wiggler beamline vary from those of an undulator beamline. In general, wiggler beamlines require that horizontal deflecting optics be placed close to the source, inside the shield wall, to deliver radiation from a large horizontal collection angle (typically 5 mrad). The design adopted here uses the width of the wiggler fan to provide for two branches. One branch contains a double-crystal monochromator for the spectral region from 1 to 10 keV and the other a spherical-grating monochromator (SGM) for the spectral region below 1 keV. These branches illuminate experimental end stations containing apparatus that is consistent with the general requirements for high-resolution vacuum ultraviolet and soft x-ray spectroscopy in materials science and in atomic and molecular physics and chemistry.

4.6.1 Front End

The front-end systems are modified versions of those in the undulator beamlines and are intended to protect the beamline equipment and storage ring from vacuum failure and to protect personnel from radiation [Melczer, 1991]. All front-end components are located inside the storage-ring shielding. The components of the undulator front end are described in Section 4.2.1 and are illustrated in Fig. 4-10.

4.6.2 Crystal Monochromator Branch Line

The technical characteristics of the crystal-monochromator beamline are given in Table 4-7, which indicates a useful tuning range of 1 to 10 keV. Such a range encompasses the *K*- or *L*-edges of all elements from sodium up to tantalum. This photon energy range is dictated by the largest d spacing of available crystals and by the allowed translation of the second crystal. The spectral range of the crystal monochromator at low photon energies overlaps that of the SGM, thereby providing continuous coverage of the wiggler spectral range. The use of crystals with a large d spacing, such as beryl and YB_{66} provide access to photon energies of 1 keV and below for instances when it is desirable to have continuous spectral coverage in one branch line. However, beryl is fragile in hostile thermal environments and would require a pre-monochromator to remove most of the power.

Table 4-7. Specifications for the crystal monochromator branch line.

Source critical energy (keV)	3.1
Wiggler deflection parameter, K	31
Width of wiggler radiation fan (mrad)	16
Source output at 5 keV [photons/(s·mrad^2·0.1% BW)] (integrated over all vertical angles)	10^{14}
Collected solid angle (mrad^2)	4×0.5
Beam area at optical system (mm^2)	52×6
Spot size at sample (mm^2)	0.8×0.15
Convergence angles at sample (mrad^2)	4×0.5
X-ray resolving power	10^{-4}
X-ray flux at sample at 10 keV (photons/s)	6×10^{12}
Useful tuning range, defined as >10% of the flux at 5 keV (keV)	1-10

The optical layout of the beamline is shown in Fig. 4-9, and the characteristics of the optical components are given in Table 4-8. The beam from the wiggler is first collimated in the vertical plane by the toroidal mirror M1, which will be fabricated by polishing a cylinder followed by elastic bending. This mirror will be water cooled. The beam then impinges on the first crystal (C1) of a standard ultrahigh-vacuum, double crystal monochromator. This system has three mechanical motions: rotation of the first crystal and rotation and translation of the second crystal. The overall effect is to provide a monochromatic x-ray beam at a fixed height. The mechanism also includes features allowing the convenient interchange of crystals, allowing beryl, YB_{66}, silicon, germanium, multilayer-coated gratings and multilayer-coated mirrors to be used.

The first crystal receives a heat load that is fairly large, but not as large in total power or power density as those being planned at other synchrotron radiation facilities. Table 4-8 includes numerical values for these power loads. We anticipate that cooling techniques with water channels inside the crystal, similar to those developed at other synchrotron facilities, will be adequate. The second crystal (C2) and the second mirror (M2) absorb very small amounts of power and are designed accordingly. The last mirror is a toroid that is fabricated in a manner similar to the first mirror, by bending a polished cylinder, but has no cooling channels. The small radius provides focusing in the horizontal (sagittal) plane and provides a best focus for a horizontal acceptance of 2 mrad. The elastically bent radius provides focusing of the initially collimated beam in the vertical (tangential) plane. The final result is almost a 1:1 image of the source on the sample. The tangential radius of the M2 mirror can be adjusted in order to enlarge (defocus) the spot size in the vertical direction to match the size of larger samples if this is desired. The phase-space data for the x-ray beam are given in Table 4-7.

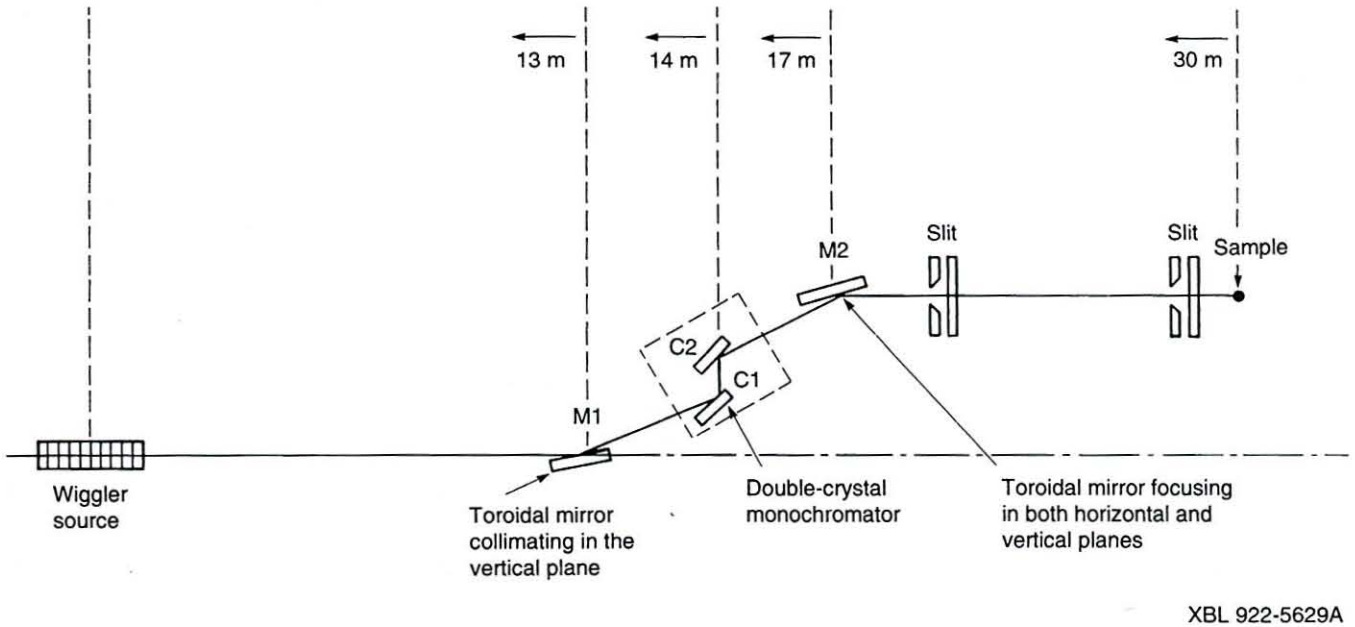

Figure 4-9. Optical layout for the crystal-monochromator branch line. The deflection angles, equal to 5 mrad, have been exaggerated for clarity. The distances indicated, which are distances to the source, may be decreased somewhat to collect a wider radiation fan.

Table 4-8. Characteristics of the optical components in the crystal monochromator branch line.

	First mirror	Crystals	Second mirror
Material	Pt-coated, Ni-plated metal	Silicon (111)	Pt-coated, Ni-plated metal
Surface shape	Toroid	Flat	Toroid
Beam incidence angle (mrad)	7.5	407 (at 5 keV)	7.5
Tangential radius (km)	34.67	∞	34.67
Sagittal radius (m)	0.195	∞	0.195
Distance from source (m)	13	14	17
Active surface area (mm^2)	867×52	16×52 (at 5 keV)	867×62
Maximum incident power (kW)	1.1	0.88 (first) small (second)	small
Maximum surface power density (W/cm^2)	2.9	121 (first) small (second)	small

4.6.3 Spherical-Grating Monochromator Branch Line

The SGM branch line delivers photons to a second experimental station. In general the SGM branch line will collect off-axis radiation from the wiggler and be operated at the same time as the crystal monochromator branch line. When it is necessary to obtain a smaller focus for certain experiments, on-axis radiation will be collected by the SGM branch line and the crystal monochromator branch line will be temporarily shut down. For the purposes of this report, we propose a high-resolution beamline that covers the same photon energy range and is similar to the U5.0 undulator beamline that is included in the initial complement of ALS experimental facilities [Warwick, DiGennaro, and Howells, 1989a]. We provide here only a summary of the beamline's essential features. Major beamline parameters are tabulated in Table 4-9.

As shown in Fig. 4-10, the branch line includes a spherical grating monochromator (SGM) with three diffraction gratings, which can cover the range of photon energies between 65 and 1500 eV. The branch line delivers photons from the wiggler, with minimum losses and high resolution. A demagnified vertical image of the source (demagnified by a factor of about 15) will be formed on the monochromator entrance slit, on the exit slit, and at the sample.

Vertical Condensing Mirror. The first optic is the vertical condensing mirror. The water-cooled spherical condensing mirror has a demagnification of 15 and generates a

Table 4-9. Design parameters for the optical components in the U5.0 beamline. The assumed energy range is 60–1500 eV.

Parameter	Vertical condensing mirror	Diffraction grating
Coating	Gold	Gold, nickel
Grazing incidence angle (deg)	2	–
Deflection angle (deg)	–	5
Distance from source (m)	15	17.51
Tangential radius (m)	53.73	70
Footprint		
Horizontal, 2.35σ (mm)	2.64	3.09
Vertical, 2.35σ (cm)	7.58	Varies
Allowed rms slope error (μrad)	1.05	0.6

vertical image of the source (a horizontal line) at the entrance slit of the monochromator. The requirement is simply to get most of the photons into the monochromator, which has an entrance slit as narrow as 10 μm in the vertical direction. A 2° grazing incidence angle was chosen, giving a reflectance from a gold-coated surface of about 60% at 1000 eV and about 40% at 1500 eV. Smaller grazing incidence angles would give better reflectivity but a longer mirror, which, if built as a cylinder or a sphere, would suffer from unacceptable coma aberrations. This mirror is 15 meters from the source and must have a minimum clear aperture 12.89 cm long (4σ) by 9.00 mm wide (8σ).

Monochromator. The monochromator must span the range of photon energies from 65 to 1500 eV, and the photon deflection angle must be small enough to ensure acceptable reflectivity at 1500 eV. Our solution was to use three gratings, each giving the same fixed deflecting angle (5°). The disadvantage of this design is less-than-optimal overlap among the corresponding three photon energy ranges. Also, the choice of a small monochromator deflection angle, necessary to pass photons up to 1500 eV, leads to a coarse diffraction grating (200 lines/mm) for the low-energy photons, but the resolution remains acceptable, as discussed below.

The finest grating, for use up to 1500 eV, requires a gold optical surface. The other two gratings, for use up to about 600 and 300 eV respectively, take advantage of the higher reflectivity of a nickel optical surface at these energies. The gratings are used in positive order to avoid large motions of the exit slit, which moves to stay at the focus of the grating as the grating rotates. The line spacing of the coarsest grating (200 lines/mm) was chosen so that the horizon wavelength (190×10^{-10} meter) is at the bottom end of the

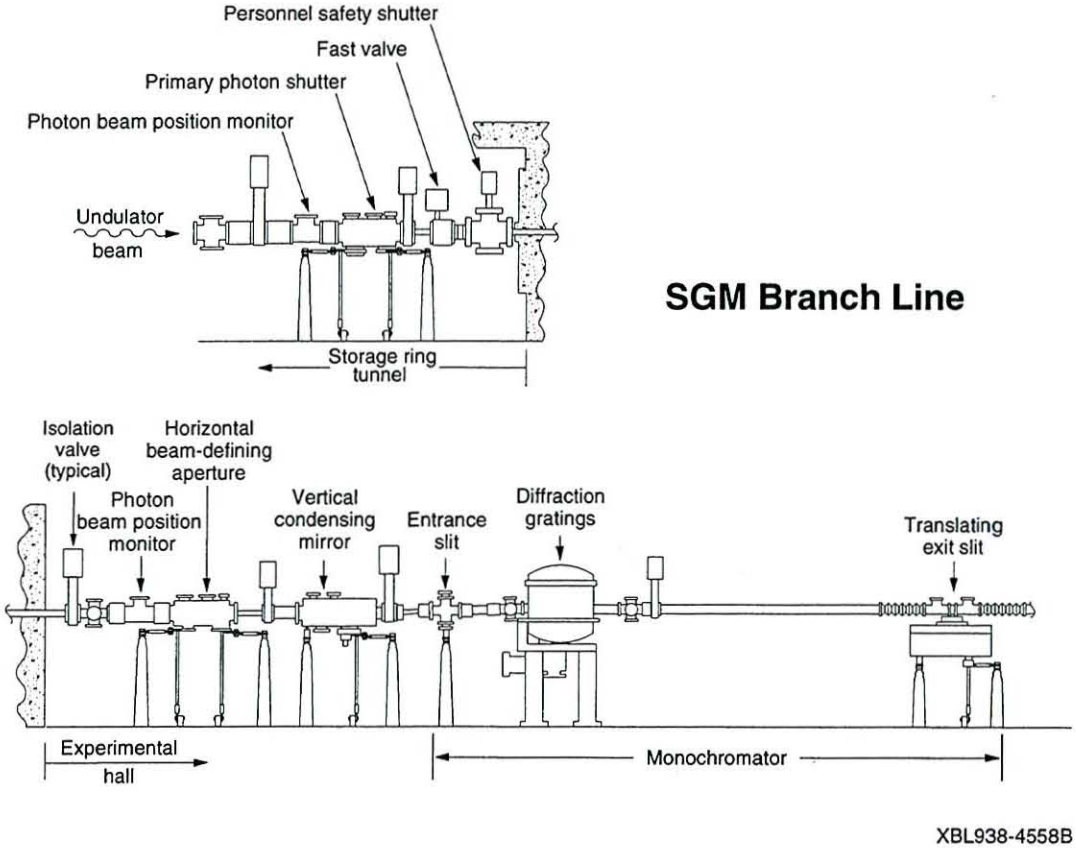

Figure 4-10. Layout for the spherical grating monochromator branch line for wiggler W16.0. The front-end components shown in the upper half of the illustration will be similar on all ALS beamlines.

energy range of interest (65 eV). The horizon wavelength (76×10^{-10} meter) and the line spacing (500 lines/mm) of the second grating are thereby indicated. The third grating is likewise specified ($\lambda_h = 32 \times 10^{-10}$ meter, 1200 lines/mm).

So that the curves of diffraction efficiency versus photon energy are broad enough to ensure overlap between the three gratings' efficiencies, the ruled profile must be laminar. The groove depth is adjusted to give peak first-order efficiency in the middle of the energy range. The resulting groove depths are 360, 144, and 60 Å for 200, 500, and 1200 lines/mm, respectively. The ruled length of each grating is 14 cm; each will be overfilled at some wavelengths.

5.

CONVENTIONAL FACILITIES

THIS chapter describes the conventional facilities included in the scope of this project. A schedule and a summary of the cost estimate are included in Chapter 6. More detailed information on the conceptual design of the conventional facilities can be found in Appendix A.

The project includes the completion of approximately 20,200 gross square feet of existing enclosed but unfinished shell space on the second floor of the ALS building. The location of the ALS building and an overview of the scope of the conventional facilities construction are shown in Figs. 5-1 through 5-3. The program for second floor completion of the second floor will provide ALS users with areas for wet and dry laboratories, support spaces, offices, a conference room, and a small library; HVAC equipment is included. The second floor area will be classified as B-2 occupancy, thus permitting storage and distribution of exempt amounts of hazardous materials. A schedule of net areas and functions is given in Table 5-1.

The existing second floor shell includes a structural steel framework; a metal floor deck with concrete fill; a metal stud/gypsum board inside perimeter wall, separating the second floor from the ALS experimental hall; and three stairways to the lower level. The separating wall is set back five feet from the edge of the second floor to provide a service right-of-way for electrical cable trays and process piping. Ventilation ducts for the experimental hall are located above the walkway, with drops in each bay.

The second floor has 24 bays ringing the experimental hall (see Figs. 5-2 and 5-3). Seven truncated bays will be occupied by mechanical and electrical equipment; one bay will serve as a lobby–reception area; this project will develop 12 bays for ALS users; and the remaining four bays are not in the project scope.

New partitions throughout the second floor will be of metal stud/gypsum board construction. Offices will have 9-ft-high suspended acoustical ceilings; corridors will have exposed plenums with a suspended open grid, 4 ft on centers, for acoustic and sight control. Laboratory areas will have 13.5 ft of clearance to the underside of major roof beams, with a suspended open grid similar to that in the corridors. Offices, conference rooms, and the library will be carpeted; flooring in the laboratories will be vinyl tile. Windows and a thermally insulated wall along the exterior perimeter already exist; horizontal blinds will be added for sunlight control.

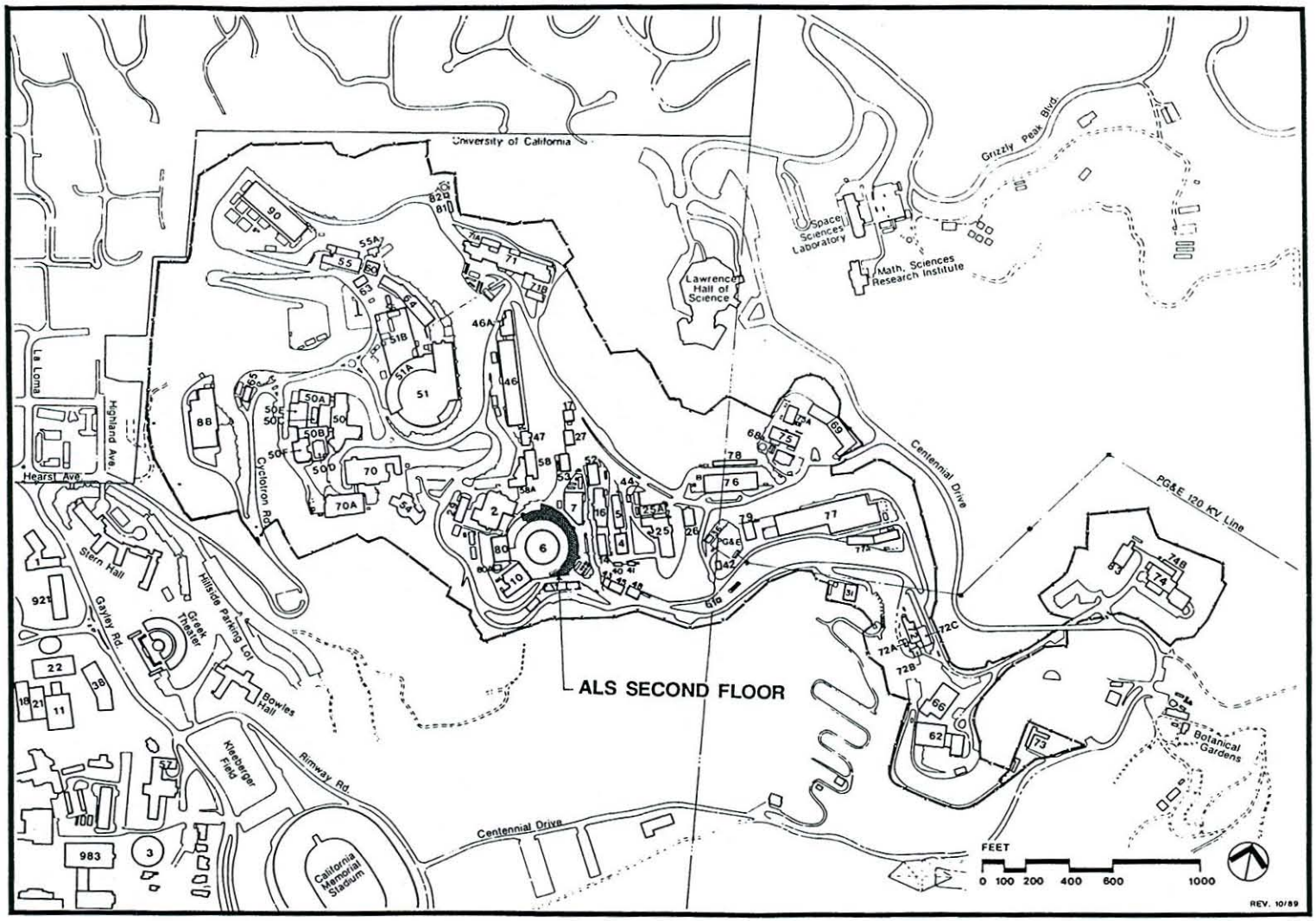

Figure 5-1. Site plan of the Lawrence Berkeley Laboratory, showing the proposed location of the project described here.

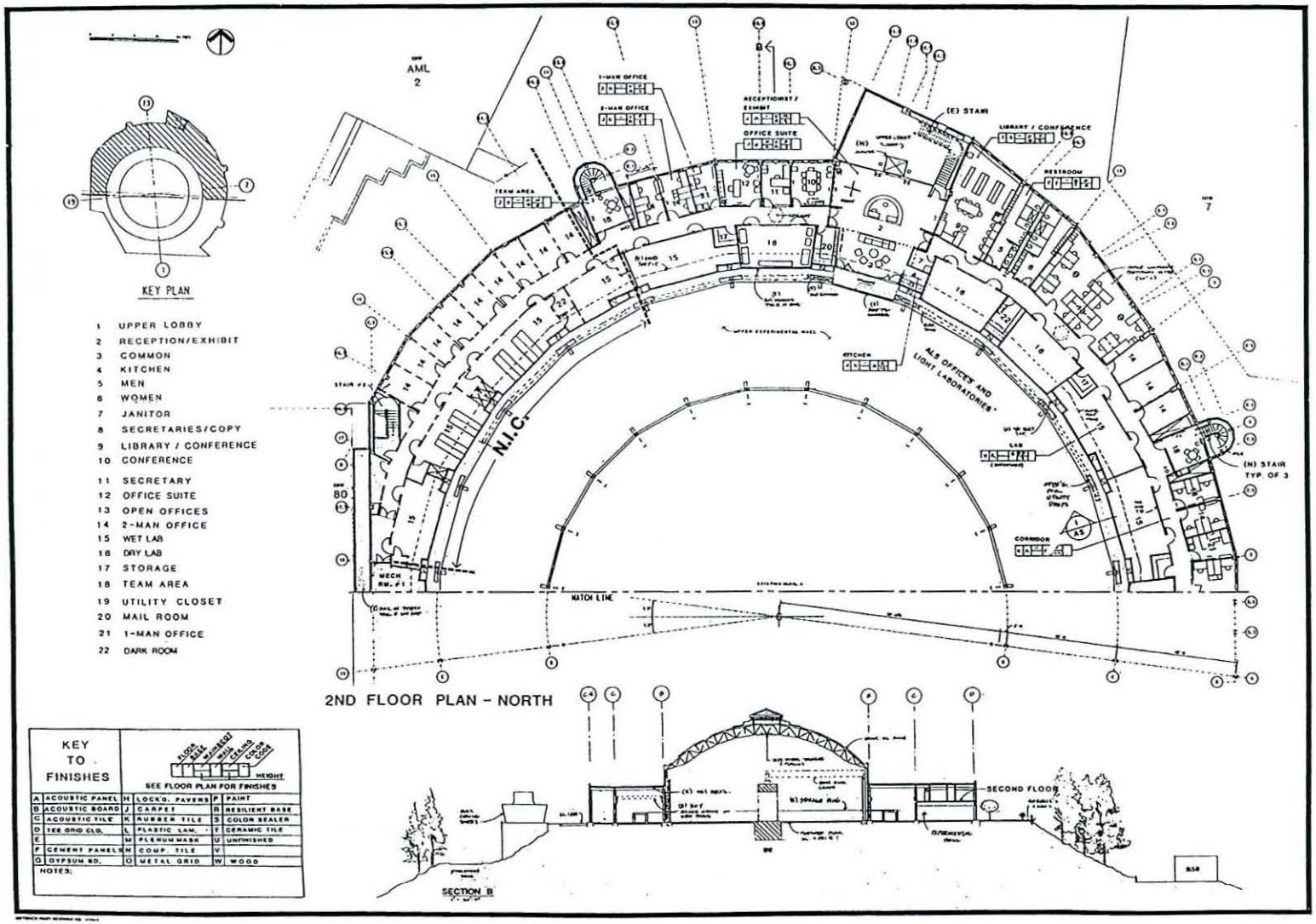

Figure 5-2. Plan view of the north half of the second floor of the ALS building.

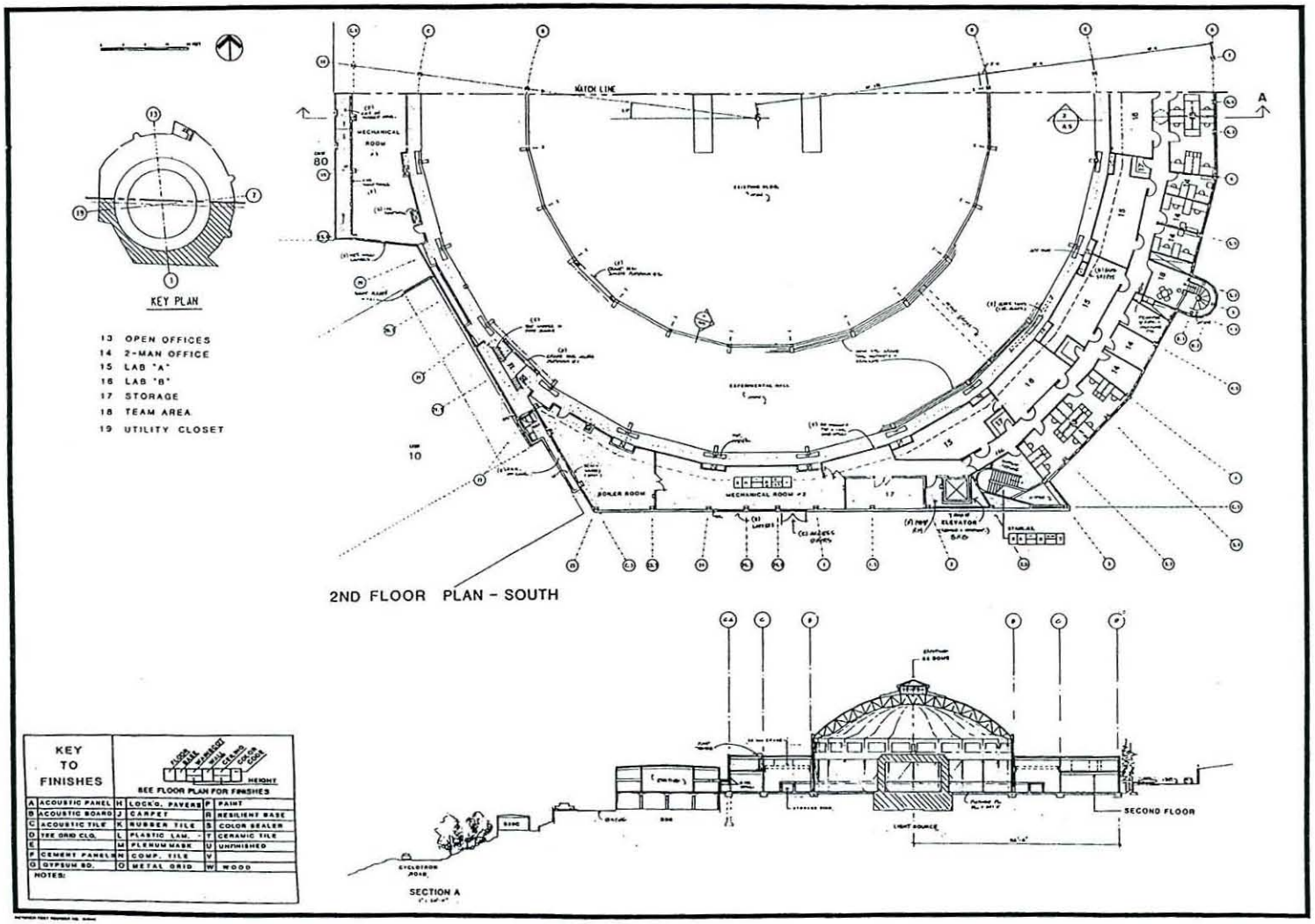

Figure 5-3. Plan view of the south half of the second floor of the ALS building.

Table 5-1. A summary of the net areas and functions in the second floor of the ALS building.

	Net area (ft^2)		
	Labs	Lab offices	Support
Laboratories	5,400		
Private offices		2,890	
Open office areas		2,330	
Exhibit/reception area			980
Waiting/common area			370
Kitchenette			60
Library			790
Mail room			110
Conference room			230
Break/meeting areas (3)			480
Dark rooms			110
Storage			700
Subtotals	5,400	5,220	3,830
Total net usable area:	**14,450 (ft^2)**		
Total gross enclosed area:	**20,200 (ft^2)**		

The second floor spaces will be air-conditioned. Air to laboratory areas will be supplied by a variable-air-volume system, with terminal boxes in the ceiling spaces. To provide the required makeup air for the fume hoods and to ensure a safe working environment, the laboratory HVAC system will use 100% outside air. Offices and support areas will be served by fan-powered, variable-air-volume terminal units, with direct digital control systems. Ventilation and fume hood exhaust units for the laboratories will be housed in three new roof-top enclosures, considerably smaller but otherwise similar to the three existing units.

The second floor completion work will include the addition of two elevators; one will be located in the reception/lobby area on the north side of the building to provide handicapped access, and an additional 7000-lb combination passenger-freight elevator will be located near the delivery access roll-up door on the south side of the building. Modifications to the existing second floor enclosure will include sprinkler system changes to reflect the new layout and plumbing changes in the new laboratory spaces.

The existing second floor is designed for 50-lb/ft^2 live loads; the floor will be strengthened in laboratory areas to provide flexibility for user needs.

The laboratory spaces will be equipped with an acid-neutralization system, laboratory mechanical and electrical systems, laboratory benches, fume hoods, laminar-flow hoods, and chemical storage cabinets.

Utilities, including compressed air, hot and cold industrial water, low-conductivity water (supply and return lines), natural gas, and 480/277-V and 208/120-V power, are available for distribution in the second floor area. A new electrical transformer and new switchgear equipment will be provided for the needs of the second floor, as well as to ensure additional power capacity for new ALS beamline loads.

6.

SCHEDULE AND COST ESTIMATE

THE scope of this project includes a complement of insertion devices, beamlines, and experimental equipment to be defined in detail by the needs of the user community, together with construction of approximately 20,200 gross square feet of laboratory, office, and other user-support space in the unfinished second floor of the ALS building. For the purposes of this report, special research facility costs were determined for the following set of insertion devices, beamlines, and experimental equipment:

- An 8-cm-period undulator and one undulator and one bend-magnet beamline for two-photon studies of dynamical phenomena in materials
- A 10-cm-period undulator and one beamline for chemical reaction dynamics
- A 3.65-cm-period undulator and a beamline (including microscope) for soft x-ray microscopy of materials and surfaces
- A crossed-field undulator to provide radiation with controlled circular polarization and one beamline for the investigation of materials and biological systems
- A 16-cm-period wiggler and one beamline with two branches for materials science and atomic physics

The scope of the project will be consistent with the cost estimate and schedule presented here. The project costs include all costs for construction, or fabrication, and installation, including engineering, design, and inspection (ED&I), and contingencies. The cost estimate does not include any costs for operation of the equipment or the facility.

6.1 SCHEDULE

The project schedule, shown in Fig. 6-1, was developed assuming that construction funding will begin in FY 1996 and that the project will be completed by the end of FY 1998. The schedule also assumes that the funding profile developed for the

Construction Project Data Sheet will be supported by Budget Authority authorized by the US Congress.

6.2 COST ESTIMATE

The work breakdown structure (WBS) is a complete compilation of all the work elements in this construction project. It defines the scope of the project in terms of the work to be done, and it provides a structure for collecting costs in an organized fashion. An abbreviated WBS for this project is the basis for the cost estimate summary shown in Table 6-1. Level 1, the item with a single-digit code, represents the entire project. Level 2 gives the breakdown into the major categories of project management (1.1), ALS beamline systems (1.2), conventional facilities (1.3), and contingencies (1.4). Still lower levels of the WBS subdivide the project into ever-finer detail. The cost summary of Table 6-1 shows detail in some cases down to level 5. Note that ED&I is a separate level 4 item for ALS beamline systems and a level 3 item for conventional facilities.

The full cost estimate was developed in terms of FY 1992 dollars, then escalated to obtain the total estimated cost (TEC) of the project. The estimate includes ED&I and deliverables, as well as costs for providing environmental, safety, and health-related support. Contingencies were estimated at WBS levels 4 and 5.

Table 6-2 is a more abbreviated cost summary, in which escalation is shown as a separate item and the TEC is given in then-year dollars. To determine the escalation, and thus the TEC, a funding profile consistent with the schedule of Fig. 6-1 was developed, and escalation was applied to calculate the cost profile in then-year dollars. The escalation rates, given in Table 6-3, come from the latest available Department of Energy guidelines for construction projects. This table shows how the $40.407 million cost estimate, in FY 1992 dollars, escalates to $52.600 million in then-year dollars (including an LBL 8.61% overhead charge) over the life of the project.

Table 6-4 is a project cost summary in terms of then-year dollars. Here, escalation has been included in each of the cost categories and thus does not appear explicitly as a separate line.

Finally, Table 6-5 is a cost schedule by major categories. This table breaks down the costs for each fiscal year into major cost categories, thus showing the cost profiles for major systems. An obligations schedule for the entire project is also given at the bottom of the table.

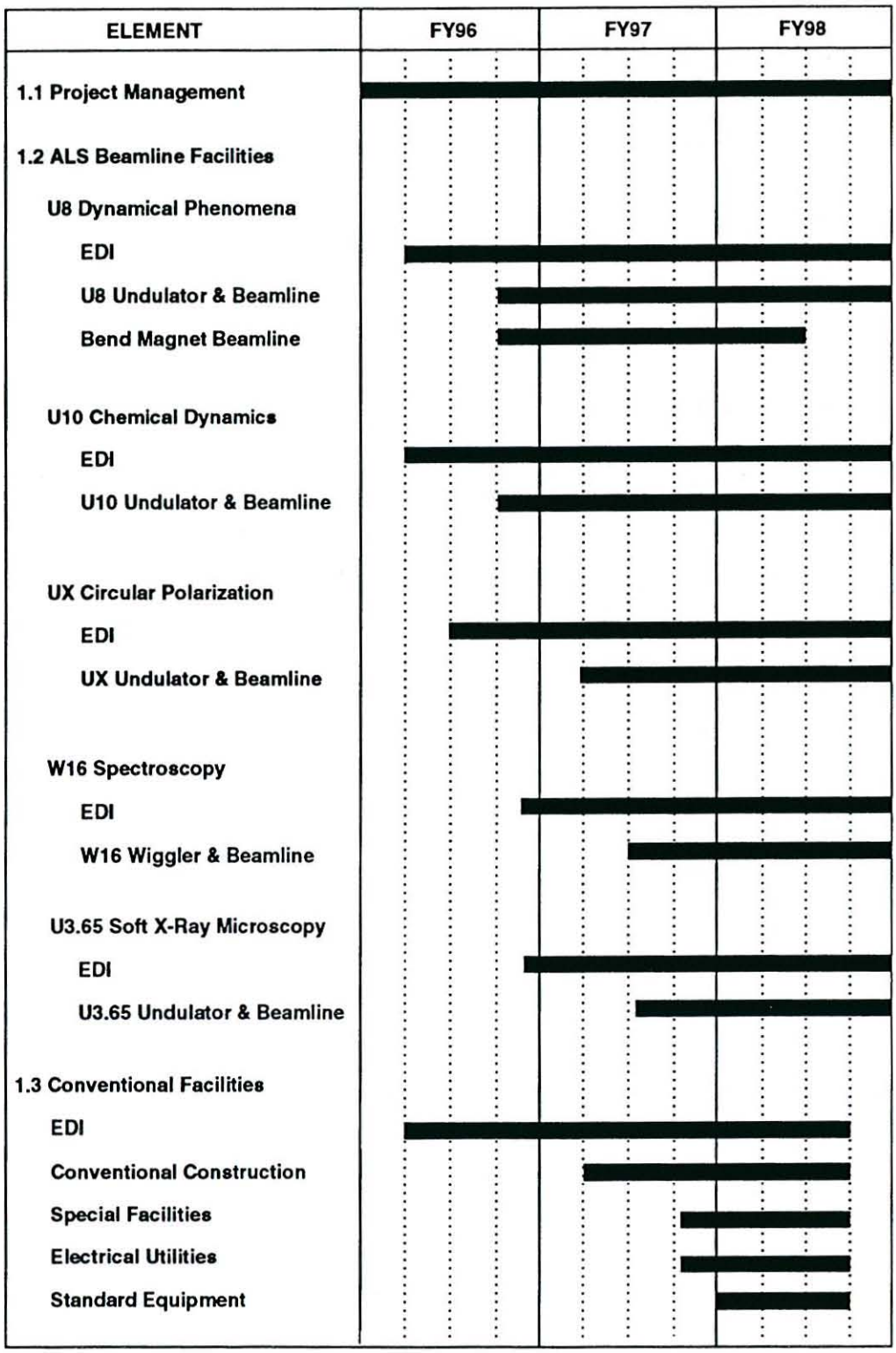

Figure 6-1. Overall project schedule.

Table 6-1. Summary of the bottom-up cost estimate. All costs are shown in thousands of FY 1992 dollars.

1.	ALS Beamlines Initiative - TEC (costs shown in FY1992 K$, and w/o LBL 8.61% Overhead)				40,407
1.1.	Project Management				2,004
1.2.	ALS Beamline Systems				26,544
1.2.1	Dynamical Phenomena Beamlines			7,185	
1.2.1.1	Engineering, Design, & Inspection		1,548		
1.2.1.2	Dynamical Phenomena Beamlines Construction		5,637		
1.2.1.2.1	U8 Undulator	1,111			
1.2.1.2.2	U8 Beamline Front End	587			
1.2.1.2.3	U8 Branchline	1,596			
1.2.1.2.4	Bend Magnet Beamline Frontend	368			
1.2.1.2.5	Bend Magnet Branchline	1,975			
1.2.2	Chemical Dynamics Beamline			4,786	
1.2.2.1	Engineering, Design, & Inspection		1,037		
1.2.2.2	Chemical Dynamics Beamline Construction		3,749		
1.2.2.2.1	U10 Undulator	1,411			
1.2.2.2.2	U10 Beamline Front End	587			
1.2.2.2.3	U10 Branchline	1,751			
1.2.3	Circular Polarization UX Beamline			4,877	
1.2.3.1	Engineering, Design, & Inspection		1,058		
1.2.3.2	Circular Polarization UX Beamline Construction		3,819		
1.2.3.2.1	UX Undulator	1,636			
1.2.3.2.2	UX Beamline Front End	587			
1.2.3.2.3	UX Branchline	1,596			

- continued -

Table 6-1 continued.

1.2.4	Spectroscopy Beamline			5,509	
1.2.4.1	Engineering, Design, & Inspection		1,200		
1.2.4.2	Spectroscopy Beamline Construction		4,310		
1.2.4.2.1	W16 Wiggler	1,059			
1.2.4.2.2	W16 Beamline Front End	622			
1.2.4.2.3	W16 Spectroscopy Branchline	1,261			
1.2.4.2.4	W16 Crystallography Branchline	1,367			
1.2.5	Soft X-Ray Microscopy Beamline			4,187	
1.2.5.1	Engineering, Design, & Inspection		898		
1.2.5.2	Soft X-Ray Microscopy Beamline Construction		3,288		
1.2.5.2.1	U3.65 Undulator	1,104			
1.2.5.2.2	U3.65 Beamline Front End	587			
1.2.5.2.3	U3.65 Branchline	1,597			
1.3.	Conventional Facilities				4,280
1.3.1	Engineering, Design, & Inspection			544	
1.3.1.1	LBL Activities		169		
1.3.1.2	AE Activities		375		
1.3.2	Construction			3,736	
1.3.2.1	Building 6 Construction		2,516		
1.3.2.2	Special Building Facilities		452		
1.3.2.3	Utilities; Elect Transformer/Switchgear		658		
1.3.2.4	Standard Equipment		111		
1.4.	Contingency				7,579
1.4.1	Management & Support			437	
1.4.2	ALS Beamline Systems			6,392	
1.4.3	Conventional Facilities			750	

Table 6-2. Project cost summary. All figures are given in thousands of FY 1992 dollars, except the total estimated cost, which is given in thousands of then-year dollars.

1	ALS Beamlines Initiative (TEC, then-year $)			$ 52,600
	1.1	Project Management		2,004
	1.2	ALS Beamlines Systems		26,544
		1.2.1 Dynamical Phenomena Beamlines	7,185	
		1.2.2 Chemical Dynamics Beamline	4,786	
		1.2.3 Circular Polarization Beamline	4,877	
		1.2.4 Spectroscopy Beamline	5,509	
		1.2.5 Soft X-Ray Microscopy Beamline	4,187	
	1.3	Conventional Facilities		4,280
		1.3.1 Engineering, Design & Inspection	544	
		1.3.2 Construction	3,736	
	1.4	Contingency		7,579
		1.4.1 Project Management	437	
		1.4.2 ALS Beamlines Systems	6,392	
		1.4.3 Conventional Facilities	750	
		Escalation		8,023
		LBL Overhead (8.61%)		4,170

Table 6-3. Escalation schedule. Costs are given in thousands of dollars.

	FY92	FY93	FY94	FY95	FY96	FY97	FY98	Total
Costs, FY 1992 K$ (Base w/o LBL 8.61% Overhead)					7,211	16,136	17,060	40,407
Inflation (%)		2.6	3.4	4.0	3.9	3.8	3.6	
Escalation factor	1.000	1.026	1.061	1.103	1.146	1.190	1.233	
Costs, Then-Year K$ (Base w/o LBL 8.61% Overhead)					8,286	19,243	20,901	48,430
Costs, Then-year K$ (Including LBL 8.61% Overhead)					9,000	20,900	22,700	52,600

Table 6-4. Project cost summary in thousands of then-year dollars.

1	ALS Instrumentation (TEC)			$ 52,600
1.1	Project Management		2,395	
1.2	ALS Beamlines Systems		31,815	
1.2.1	Dynamical Phenomena Beamlines	8,630		
1.2.2	Chemical Dynamics Beamline	5,732		
1.2.3	Circular Polarization Beamline	5,844		
1.2.4	Spectroscopy Beamline	6,611		
1.2.5	Soft X-Ray Microscopy Beamline	4,998		
1.3	Conventional Facilities		5,140	
1.3.1	Engineering, Design & Inspection	650		
1.3.2	Construction	4,490		
1.4	Contingency		9,080	
1.4.1	Project Management	520		
1.4.2	ALS Beamlines Systems	7,700		
1.4.3	Conventional Facilities	860		
	LBL Overhead (8.61%)		4,170	

Table 6-5. Cost schedule by major categories, in thousands of then-year dollars. An obligation schedule for the complete project is given at the bottom of the table.

	FY96	FY97	FY98	Total
1.1 Project Management	573	892	930	2,395
1.2 ALS Beamlines Systems				
Dynamical Phenomena Beamlines	1,261	3,689	3,680	8,630
Chemical Dynamics Beamline	1,146	2,261	2,325	5,732
Circular Polarization Beamline	1,146	2,261	2,437	5,844
Spectroscopy Beamline	1,146	2,618	2,846	6,611
Soft X-Ray Microscopy Beamline	1,146	2,142	1,709	4,998
1.3 Conventional Facilities	370	2,470	2,300	5,140
1.4 Contingency	1,497	2,910	4,674	9,080
Costs, Totals by Year, w/o LBL Overhead	8,286	19,243	20,901	48,430
Costs, Totals by Year, incl. LBL Overhead	9,000	20,900	22,700	52,600
Obligations, Totals by Year, incl. LBL Overhead	11,600	23,900	17,100	52,600

7.
REFERENCES

ALS Insertion Device Design Group, 1990. *U8.0 Undulator Conceptual Design Report,* Lawrence Berkeley Laboratory, Berkeley, California, PUB-5276.

ALS Insertion Device Team, 1991. *W16.0 Wiggler Conceptual Design Report,* Lawrence Berkeley Laboratory, Berkeley, California, PUB-5288.

An ALS Handbook, 1989. Lawrence Berkeley Laboratory, Berkeley, California, PUB-643 Rev. 2.

Applications of Circularly Polarized Photons at the ALS from a Bend-Magnet Source, 1992. Lawrence Berkeley Laboratory, Berkeley, California, LBL-31854.

Applications of the Advanced Light Source to Problems in the Earth, Soil, and Environmental Sciences, 1992. Lawrence Berkeley Laboratory, Berkeley, California, LBL-31852.

Baer, T., 1988. *Summary of Workshop on Chemical Applications of Undulator Radiation,* Lawrence Berkeley Laboratory, Berkeley, California, PUB-5214.

Bahrdt, J., A. Gaupp, W. Gudat, M. Mast, K. Molter, W. B. Peatman, M. Sheer, T. H. Schroeter, and C. H. Wang, 1992. "Circularly Polarized Synchrotron Radiation from the Crossed Undulator at BESSY", *Rev. Sci. Instrum.* **63**, 1 (Part IIA).

Bennet, J. M., 1971. Ph.D. thesis, University of London.

Chemical Dynamics Research Laboratory Conceptual Design Summary, 1990, Lawrence Berkeley Laboratory, Berkeley, California, PUB-5266.

Chen, C. T., 1987. *Nucl. Instrum. Methods* **A256,** 595.

Combustion Dynamics Facility Scientific Program Summary, 1990. Lawrence Berkeley Laboratory, Berkeley, California, PUB-5284.

Carruthers, J., W. Oldham, and D. Attwood, 1991. *Soft X-Ray Lithography at Berkeley's Advanced Light Source,* Lawrence Berkeley Laboratory, Berkeley, California, LBL-30431.

Dillard, J., H. Wollenberg, D. Perry, R. Giauque, and A. Thompson, 1988. *Summary of Discussions of Uses of the Advanced Light Source for Earth Sciences Research: Workshop Report,* Lawrence Berkeley Laboratory, Berkeley, California, LBL-26138.

Eberhardt, W., and C. S. Fadley, 1988. *Summary of Workshop on New Opportunities in Surface Science,* Lawrence Berkeley Laboratory, Berkeley, California, PUB-5215.

Heimann, Philip, 1991. *The Photon Flux of the U8 and U5 Beam Lines,* Advanced Light Source project document LSBL-110.

Hogrefe, H., M. R. Howells, and E. Hoyer, 1986. *SPIE* **733,** 274.

Hoyer, E., J. Chen, K. Halbach, W. V. Hassenzahl, D. Humphries, B. Kincaid, H. Lancaster, and D. Plate, 1991. *The U5.0 Undulator for the ALS,* Lawrence Berkeley Laboratory, Berkeley, California, LBL-30459.

Jacobsen, C., 1985. *SPIE* **582,** 201.

Kevan, S. D., and F. J. Himpsel, 1988. *Summary of Workshop on New Opportunities in Interface and Materials Research,* Lawrence Berkeley Laboratory, Berkeley, California, PUB-5213.

Kirz, J. and D. Sayre, 1980. "Soft X-Ray Microscopes," in *Synchrotron Radiation Research*, H. Winick and S. Doniach, Eds. (Plenum, New York).

Krause, M. O., D. W. Lindle, and R. C. C. Perera, 1988. *Future Capabilities Offered by Advanced Synchrotron Radiation Sources: A Report of a Symposium Held in Conjunction with the Workshop on New Directions in Soft X-Ray Near-Threshold Phenomena,* Lawrence Berkeley Laboratory, Berkeley, California, PUB-5207 Rev.

Melczer, M. E. *Generic Frontend Design Concepts for the ALS,* Advanced Light Source project document LSBL-62.

1–2 GeV Synchrotron Radiation Source Conceptual Design Report, 1986. Lawrence Berkeley Laboratory, Berkeley, California, PUB-5172 Rev.

Perera, R., P. W. Cowan, and A. S Schlachter, 1991. *Applications of Photon-In, Photon-Out Spectroscopy with Third-Generation Synchrotron Radiation Sources,* Lawrence Berkeley Laboratory, Berkeley, California, LBL-31323.

Putting Synchrotron Radiation to Work: Analytic Methods, 1992. Lawrence Berkeley Laboratory, Berkeley, California, LBL-31851.

Rothman, S., J. Grendell, T. Hayes, M. Klein, and A. Quintanilha, 1988. *Summary of Workshop on Life Sciences at the Advanced Light Source,* Lawrence Berkeley Laboratory, Berkeley, California, PUB-5211 Rev.

Soft X-ray Interferometry, 1993. Lawrence Berkeley Laboratory, Berkeley, California, LBL-34541.

Spectroscopic Imaging, Diffraction, and Holography with X-Ray Photoemission, 1992. Lawrence Berkeley Laboratory, Berkeley, California, LBL-31853.

Synchrotron Radiation in Transactinium Research, 1992. Lawrence Berkeley Laboratory, Berkeley, California, LBL-33049.

U5.0 Undulator Conceptual Design Report, 1989. Lawrence Berkeley Laboratory, Berkeley, California, PUB-5256.

Van Hove, M. A., L. M. Falicov, and T. Upton, 1990. *Report of an Advanced Light Source Workshop on Challenges for Interface Theory,* Lawrence Berkeley Laboratory, Berkeley, California, LBL-30042.

Vladimirsky, Y., et al., 1988. "Zone Plate Lenses for X-Ray Microscopy," in D. Sayre et al., Eds. *X-Ray Microscopy II* (Springer-Verlag, Berlin).

Warwick, T., D. DiGennaro, and M. Howells, 1989a. *U5 Beamline Design Document,* Advanced Light Source project document LSBL-40A.

Warwick, T., D. DiGennaro, and M. Howells, 1989b. *U8 Beamline Design Document,* Advanced Light Source project document LSBL-41.

Working Group on Elliptical Wiggler, 1993. Lawrence Berkeley Laboratory, Berkeley, California, LBL-33996.

ALS BEAMLINES INITIATIVE

CONTENTS

Section		Page
1	INTRODUCTION	
	Summary	1-1
	Project Justification	1-1
	Alternative Solutions Considered	1-2
	Basis of Conceptual Design for Conventional Facilities	1-2
	Method of Performance	1-2
2	PROJECT DESCRIPTION	
	General	2-1
	Conventional Facilities Design Criteria	2-1
	Schedule of Net Areas	2-5
	Applicable Codes and Design References	2-6
	Quality Assurance Procedures	2-9
	Supplementary Project Data, Facility Utilization	2-13
3	COST ESTIMATE FOR CONVENTIONAL FACILITIES	
	Basis of Cost Estimate	3-1
	Financial Schedule and Summary Cost Estimate (TY $K)	3-2
	Schedule I (Special Building Facilities) (TY $K)	3-3
	Schedule II (Standard Equipment) (TY $K)	3-3
	Construction Cost Summary (TY $K)	3-4
	Estimate Summary (TY $K)	3-5
	Escalation Analysis (TY $K)	3-9
	Obligations and Cost Schedule (TY $K)	3-10
	BA/BO Schedule (TY $K)	3-11
	Contingency Analysis (FY 1992 $K)	3-12
	Departmental Price Change Index, FY 1996 Guidance	3-13
4	PROJECT TIME SCHEDULE	
	Basis of Project Time Schedule	4-1
	Time Schedule	4-2
5	PROJECT DRAWINGS	5-1

Section Page

6 OUTLINE SPECIFICATIONS 6-1
Division 1 General Requirements 6-4
Division 3 Concrete 6-6
Division 5 Metals 6-8
Division 6 Wood and Plastics 6-9
Division 7 Thermal and Moisture Protection 6-10
Division 8 Doors and Windows 6-12
Division 9 Finishes 6-14
Division 10 Specialties 6-16
Division 11 Equipment 6-19
Division 12 Furnishings 6-20
Division 13 Special Construction 6-21
Division 14 Conveying Systems 6-23
Division 15 Mechanical 6-24
Division 16 Electrical 6-28

7 ENERGY CONSERVATION
Project Overview 7-1
General In-House Energy Management Requirements 7-1
Identified Energy Conservation Opportunities 7-2

8 SAFETY AND ENVIRONMENTAL CONSIDERATIONS 8-1

9 DETAILED SUPPORTING DATA 9-1
Basis for Architectural Design 9-2
Basis for Structural Design 9-4
Basis for Mechanical Design 9-6
HVAC Load Calculations 9-10
Basis for Electrical Design 9-58
Cost Estimate Detail for Conventional Facilities 9-61
Details of Estimate for Special Building Facilities and Standard Equipment (FY 1992 $K) 9-81
Obligations and Costs Schedule (FY 1992 $K) 9-84
ED&I Analysis (TY $K) 9-86

DOE/SF
CONCEPTUAL DESIGN REPORT
REVIEW CHECKLIST

Project Title: ALS BEAMLINES INITIATIVE

Date of CDR: FEBRUARY 1994 Project Location: LAWRENCE BERKELEY LABORATORY

In the space provided below, please indicate where the item is located in the CDR, e.g. page number, section, etc. If not applicable, then indicate N/A and explain in writing.

1)	1-1	Project justification.
2)	2-1	Detailed description of the project scope.
3)	2-1	Performance requirements (facility/building/system/ process).
4)	3-1; 9-61	Project cost estimate.
5)	3-1	Cost estimate assumptions and methodology.
6)	3-1	Cost estimate date.
7)	3-1	Identification of the originator of the cost estimate.
8)	3-1	Escalation rates used in cost estimate.
9)	N/A	Major areas of cost uncertainties.
10)	3-10	Financial schedule (annual obligation/cost requirements).
11)	1-2	Discussion on alternatives considered.
12)	Section 7	Life cycle cost analysis of proposed project and alternatives.
13)	4-2	Schedule with major milestones and critical path identified (design, procurement, construction, mid-point of construction, environmental compliance and safety analysis).
14)	4-1	Schedule constraints (funding, seasonal, R&D related, etc.).
15)	1-2	Method of performance (acquisition strategy) for design, procurement and construction.
16)	Appendix B; 3-11	Work breakdown structure.
17)	8-1	Safeguards and security requirements.
18)	8-1	Safeguards and security features incorporated.
19)	7-1	Energy conservation design/construction features.
20)	7-1	Estimates of energy consumption and types of energy supply.
21)	8-1	Health, safety and fire protection hazards/risks.

Project Title: ALS BEAMLINES INITIATIVE

22)	8-1	Health, safety and fire protection features.
23)	8-1	Schedule for safety analysis review/documentation.
24)	8-1	Environmental hazards/risks.
25)	4-1	Discussion on level of required NEPA documentation.
26)	8-1	Environmental hazards/risks mitigation features.
27)	4-2	Schedule for NEPA compliance/documentation.
28)	N/A	Decontamination, decommissioning and disposal requirements.
29)	2-9	Discussion on project quality assurance to satisfy program and project objectives.
30)	N/A	Range of facility/building/system/process operating conditions.
31)	N/A	Required facility/building/system/process degree of reliability.
32)	N/A	Intended useful life of facility/building/system/process.
33)	N/A	Discussion on maintenance, repair and replacement of facility.
34)	2-4, 9-60	Telecommunications requirements.
35)	2-4	Computer equipment requirements.
36)	2-1	Provision for access and use by the physically handicapped.
37)	N/A	Provision for fallout shelters.
38)	N/A	Discussion on project uncertainties/risks and effort required to resolve.
39)	3-12; Appendix B	Contingency requirements and analysis.
40)	5-2	Site development plan (including utilities) drawings.
41)	5-3 thru 5-6	Building layout (plan and elevation views) drawings.
42)	5-3 thru 5-6	Major equipment layout drawings.
43)	N/A	Piping and instrumentation drawings.
44)	5-7 thru 5-9	Process and HVAC layout drawings.

Project Title: ALS BEAMLINES INITIATIVE

45)	N/A	Discussion on facility siting, site development plan, site development requirements and real estate issues (easements, permits, etc.).
46)	2-3, 2-4	Utility service requirements, utility sources, modifications to existing utility arrangements/agreements (easements, permits, etc.).
47)	3-5, 9-81	List of major standard equipment and special facilities.
48)	2-13	Discussion on space utilization/building efficiency ratio.
49)	2-1	Construction types and materials.
50)	6-1	Outline construction specifications.
51)	2-6	Applicable codes, standards, regulations, DOE Orders, etc.
52)	2-3	Design loads (facility/building/system/process).
53)	N/A	Subsurface/geotechnical requirements.
54)	2-13	Strategic Facilities Initiative form.
55)	N/A	Migration plan.
56)	Last Page CDR	Protection of Information disclaimer.

ALS BEAMLINES INITIATIVE

SECTION 1

INTRODUCTION

Summary

This section summarizes the Conventional Facilities included in the scope of the Advanced Light Source (ALS) Beamlines Initiative. More detailed information covering scope, cost and schedule is included in sections that follow.

The ALS Beamlines Initiative facilities will be located on the second floor of existing Building 6 within the ALS Complex as shown on the drawings in Section 5. Drawing A-1 shows the location of the proposed facilities on the Lawrence Berkeley Laboratory (LBL) site.

The ALS Beamlines Initiative facilities will occupy a total of 20,200 gross square feet (GSF) and 14,450 net square feet (NSF) of space.

Project Justification

Important new research opportunities in fields ranging from material and surface science to structural biology will come about as a result of the construction, currently under way, of the Advanced Light Source at the Lawrence Berkeley Laboratory. Investigators from industry, universities, and national laboratories will have access to this facility's unique product: very short pulses of high-brightness ultraviolet radiation and soft x-rays. Funds provided for the construction of ALS, however, did not provide for construction of laboratory and office support spaces for the several hundreds of users expected at the fully developed facility. This project will provide much needed laboratory, office and other support spaces as a step toward full utilization of this unique national resource.

The ALS will support a host of new scientific studies, both basic and applied. In chemistry, for example, the ALS's output in the ultraviolet will offer new insights into chemical reactivity. The high brightness and picosecond time structure of the radiation will permit high-resolution dynamical studies of reaction kinetics, excited-state processes, and molecular photoprocesses. In materials and surface science, the capabilities of the facility will permit new investigations of bulk materials, as well as surfaces and interfaces. Time-resolved studies in catalysis will also be undertaken, and it will be possible to verify microscopic models for catalysis, oxidation, corrosion, and interface growth. In the life sciences, the ALS will offer a unique opportunity to expand the nascent fields of x-ray microimaging and biological photography, at the same providing radiation for the worldwide efforts in x-ray crystallography.

As the use of synchrotron radiation continues to grow, new techniques and new research directions continue to emerge, and research priorities are certain to evolve in response both to growing understanding of the natural world and to currently unimagined research possibilities.

The ALS Beamlines Initiative Conventional Facilities will be a part of a national user facility, available to qualified researchers, in accordance with the ALS User Policy.

Alternative Solutions Considered

The ALS Beamlines Initiative laboratory and office support facilities must be in close proximity and have direct access to the ALS for optimum integration of associated research and development.

The Light Source Building Addition to Building 6 was completed in FY 1991. Construction of an enclosed shell for the second floor above the ALS experimental area was included in the ALS project to be made available for research users as unfinished open space. No other solution was considered.

Basis of Conceptual Design for Conventional Facilities

The conceptual design of conventional facilities for the ALS Beamlines Initiative project was developed by the LBL Facilities staff with the assistance of the following consultants.

- Keller and Gannon, Engineers-Architects

Cost estimates for conventional facilities were prepared by Gosliner/McLean Associates, Inc., Professional Estimators, based upon quantity take-off from drawings and specifications produced by LBL and the above consultants. Estimates for Special Building Facilities and Standard Equipment listed in Schedules I and II were based on recent experience, vendor quotations, and catalog data with appropriate discounts. Estimates were prepared in April 1992.

Back-up data for the estimates are included in Section 9, Detailed Supporting Data.

Method of Performance

General

A Project Manager, assigned by LBL, will be responsible for coordinating efforts of the project team and for reporting status relative to scope, schedule and cost for the duration of the project.

Design

A Design Program will be prepared by the LBL Facilities Department based upon programmatic criteria supplied by the ALS users groups.

An Architect-Engineering firm with appropriate laboratory design experience will be selected for Titles I and II design services and for technical oversight during construction. Independent reviews of the structural design and the cost estimate will be arranged by LBL.

Construction

Construction will be accomplished by a lump-sum Subcontract awarded after competitive bidding. Construction contract administration and inspection will be accomplished by LBL.

Procurement

Standard equipment and certain special building facilities will be procured directly by LBL after competitive bidding. Otherwise procurement will be the responsibility of the construction Subcontractor.

ALS BEAMLINES INITIATIVE

SECTION 2

PROJECT DESCRIPTION

General

This section describes conceptual design and project design criteria for the ALS Beamlines Initiative conventional facilities construction on the second floor of ALS Building 6.

Conventional Facilities Design Criteria

A. General

1. In compliance with the 1992 Lawrence Berkeley Laboratory (LBL) Site Development Plan approved by DOE.

2. Environmental Safety: In compliance with DOE, OSHA, State of California, and LBL standards.

B. Architectural

1. Occupancy: 58

2. Occupancy Classification: B-2

3. Construction Type: II-one hour, noncombustible.

4. Fire Resistivity: ALS Building: One hour at external walls, two hours at adjacent buildings, noncombustible construction, sprinklered. Laboratories separated from each other by one hour walls.

5. Schedule of Net Areas (chart follows).

6. Code Compliance: 1991 Uniform Building Code.

7. Handicapped Requirements: In compliance with ANSI standards.

The program for the completion of the ALS second floor includes wet and dry laboratories, support spaces, private offices and open office landscape areas. The second floor area will be classified as B-2 occupancy permitting exempt amounts of hazardous materials.

The existing second floor shell includes structural steel framework, metal floor deck with concrete fill, metal stud/gypsum board inside perimeter wall separating the second floor from the ALS Experimental Hall, and three stairways to the lower level. The separating wall is set back five feet from the edge of the second floor to provide a

service right-of-way for electrical cable trays and process piping. Ventilation ducts for the experimental hall are located above this walkway with drops in each bay.

The second floor has 24 bays ringing the experimental hall around the outside perimeter. Seven truncated bays are occupied by mechanical and electrical equipment and one bay is dedicated to a reception/exhibit/lobby area. The project proposes development of 12 bays for ALS users. The remaining four (4) bays are not in the scope of this project. A typical second floor bay is four feet (4') wide, excluding the service area, 39 feet remain for user development.

New partitions throughout the second floor will be of metal stud/gypsum board construction. Offices will have 9' high suspended acoustical ceilings and corridors will have exposed plenums with suspended open grid four feet on centers for acoustic and sight control. Laboratory areas will have 13'-6" clearance to the underside of major roof beams with similar suspended open grid as in the corridor. The offices, conference rooms and library will be carpeted while flooring in laboratories will be acid resistant sheet vinyl with heat-welded seams. Windows and thermal insulated wall along the exterior perimeter are existing. Horizontal blinds will be added for sun control.

The second floor spaces will be air-conditioned. Air to laboratory areas will be supplied by a variable air volume system with terminal boxes in the ceiling spaces. To provide the required makeup air for the fume hoods and to ensure safe working environment, the laboratory HVAC system will utilize 100% outside air. Offices and support areas will be served by fan powered variable air volume terminal units with Direct Digital Control (DDC) system. Ventilation and fume hood exhaust units for the laboratories will be housed in three new rooftop enclosures similar to the three existing units.

The second floor completion work will include the addition of two elevators; one in the reception/lobby area to provide handicapped access, and a 7,000 lb. combination passenger/freight elevator located near the delivery area on the south side of the building. The existing sprinkler system will be modified to reflect the new layout. The existing second floor is designed for 50 lb/sq. ft. load; the floor framing will be strengthened to provide flexibility for user needs.

The laboratory spaces will be equipped with an acid neutralization system, laboratory mechanical and electrical systems, laboratory benches, fume hoods, laminar flow hoods, and chemical storage cabinets.

Utilities, including compressed air, hot and cold industrial water, low conductivity water, natural gas, and 480/277V and 208/120V power, are available for distribution on the second floor. A new electrical transformer and new switchgear equipment will be provided for the needs of the second floor as well as to provide additional power capacity for new ALS beamlines.

C. Structural (See Basis of Design in Section 9)

1. Conventional facilities are improvements within existing structures.

2. Floor framing will be strengthened to increase floor capacity from the existing 50 lbs./sf to 125 lbs./sf recommended for light laboratories.

3. Existing structures comply with 1991 Uniform Building Code and LBL "Lateral Force (Wind and Earthquake) Design Criteria," July 1, 1992.

D. Mechanical (see Basis of Design and HVAC Load Calculations in Section 9)

1. Inside Design Conditions: Laboratories and administrative offices provided with air conditioning:

   Summer: 76°F db
   Winter: 72°F db

2. Heating: Hot water supplied from the existing system.

3. Air Handling Systems: Tempered 100% outside air to static pressure controlled variable air volume (VAV) terminal boxes for laboratory spaces. Fan-powered variable air volume terminal units for office spaces. Fume hoods incorporating face velocity controllers and variable air volume laboratory exhaust systems.

4. Automatic Control System: Direct Digital Control (DDC) with connection to the existing facility automation system on site.

5. Mechanical Cooling: Chilled water supplied from the existing system.

6. Fire Protection: Modification of the existing fire sprinkler systems to suit the new layouts.

7. Utilities Provided

   Compressed air
   Nonpotable industrial hot and cold water
   Low conductivity water (LCW)
   Natural gas
   Laboratory acid waste separation and collection

   Industrial water, low conductivity water, natural gas, and compressed air will be extended into these areas from the existing systems located in the facility.

E. Electrical (See Basis of Design in Section 9)

1. Power and Lighting

   Large process loads - 480V
   Area lighting - 277V

Area lighting - 277V
Standby generator - 300KVA (existing)
Interior lighting - fluorescent
Lighting level - 50 footcandles

2. Communications

   Integrated Communications System (ICS)
   Closed-circuit intercom
   Local paging system

3. Energy Monitoring and Control System (existing)

4. Fire Alarm and Security

   Fire alarm stations
   Fire alarm horns
   Card key door entry control

ALS BEAMLINES INITIATIVE

SCHEDULE OF NET AREAS

	Net Area - Sq. Ft.		
	Labs	Lab Offices	Support
Wet Laboratories	3,200		
Dry Laboratories	2,200		
Laboratory Offices		5,220	
Conference/Meeting Rooms			710
Library			790
Dark Rooms			110
Storage			700
Mail Room			110
Visitors' Area			370
Reception/Exhibit Area			980
Kitchenette			60
Subtotal:	5,400	5,220	3,830

Total Net Area: 14,450 sq. ft.

Total Gross Enclosed Area: 20,200 sq. ft.

APPLICABLE CODES AND DESIGN REFERENCES

Applicable requirements and recommendations in the following codes and references will be followed in the design. These codes, as listed, should be included in the construction specifications. Codes and references will be the latest editions except where specifically noted otherwise:

A. Codes

1. 10 CFR Part 435 Energy Conservation Voluntary Energy Performance Standards (Mandatory for Federal Buildings)
2. 29 CFR Part 1910, Occupational Safety and Health Standards, Department of Labor
3. 29 CFR Part 1926, Safety and Health Regulations for Construction, Department of Labor
4. 36 CFR Part 1191, Architectural and Transportation Barriers Compliance Board
5. 40 CFR Parts 264 and 265, Environmental Protection Agency
6. National Fire Codes, National Fire Protection Association (NFPA)
7. National Electrical Safety Code, ANSI C2
8. National Electric Code, NFPA 70 (NEC-1990) latest edition
9. Safety Code for Building Construction, ANSI A10.2
10. California Code of Regulations, Title 8, General Industrial Safety Orders, Construction Safety Orders
11. California Code of Regulations, Title 19 - Public Safety, Chapter 1; Title 24, Part 2 - California Building Code; and Title 24, Part 3 - California Electrical Code
12. California Energy Code
13. Uniform Building Code
14. Uniform Mechanical Code
15. Uniform Fire Code
16. Uniform Plumbing Code
17. Occupational Safety and Health Act
18. Federal, state, and local air-pollution and water-pollution control regulations
19. AMCA Fan Test Code
20. NBSIR 78-1305A Test Procedures
21. LBL Lateral Force (Wind and Earthquake) Criteria

B. Design References

1. Department of Energy General Design Criteria Manual, DOE Order 6430.1A
2. LBL Design Management Procedures Manual
3. LBL Long Range Site Development Plan
4. NBS Handbook 135, Life Cycle Cost Manual for the Federal Energy Management Program
5. The ASHRAE Handbook and Product Directory:
   a. HVAC Systems and Equipment Volume
   b. HVAC Applications Volume
   c. Fundamentals Volume
   d. Refrigeration Volume
6. Standards for Natural and Mechanical Ventilating, ASHRAE Standard 62-1989 (ANSI B194.1-1977)
7. Standards for Thermal Environmental Conditions for Human Occupancy, ASHRAE Standard 55-1981
8. Sheet Metal and Air Conditioning Contractors' National Association (SMACNA) Standards
9. Standards and Codes of the American Society of Mechanical Engineers (ASME)
10. American Water Works Association (AWWA) Standards
11. National Environmental Balancing Bureau (NEBB)
12. American Welding Society Handbook and Standards (AWS)
13. Standards of the American Society for Testing and Materials (ASTM) *(Not located in Plant)*
14. American National Standard for Buildings and Facilities Providing Accessibility and Usability for Physically Handicapped People. ANSI A117.1-1986
15. Recommended Outdoor Design Temperatures, Northern California Golden Gate Chapter, ASHRAE, November 1977
16. Industrial Ventilation Manual by the American Conference of Governmental Industrial Hygienists (ACGIH)
17. Earthquake-Resistive Construction for Mechanical Systems, Light Fixtures, and Ceilings, Ayres & Hayakawa, July 1972
18. Guidelines for Seismic Restraints of Mechanical Systems and Plumbing Piping Systems, SMACNA, 1992

19. Design Evaluation Guidelines for DOE Facilities Subject to Natural Phenomena, UCRL 15910, June 1990

20. American National Standards Institute (ANSI) Standards

21. National Electrical Manufacturers' Association (NEMA) Standards

22. Institute of Electrical and Electronics Engineers (IEEE) Standards

23. Underwriters' Laboratories, Inc. (UL) Standards and "Building Materials, Fire Protection Equipment, and Fire Resistive Directories"

24. Factory Mutual Engineering Corp. (FM) Approval Guide and FM Loss Prevention Data

25. Insulated Cable Engineers' Association (ICEA) Standards

26. National Electrical Testing Association (NETA) Standards

27. Illuminating Engineering Society (IES) Lighting Handbook

28. Department of Energy Electrical Safety Criteria for Research and Development Activities, DOE/EV-0051/1, August 1979

29. Standard for Fire Protection of DOE Electronic Computer/Data Processing Systems, Jan 1984 (DOE/EP-0108, Formerly Wash 1245-1). See paragraph 101.4.

30. A Building Planning Guide for Communication Wiring, International Business Machines Corp., G320-8059-1, March 1984

31. American Institute of Steel Construction, Manual of Steel Construction, ninth edition

32. American Concrete Institute, ACI Manual of Concrete Practice, Parts 1 through 5, latest edition

33. ANSI/IES RP7 "Practice for Industrial Lighting"

34. LBL Building Automation System Design Criteria and Design Guidelines

35. The NRCA Roofing and Waterproofing Manual

36. Architectural Sheet Metal Manual

QUALITY ASSURANCE PROCEDURES FOR DESIGN, CONSTRUCTION, FACILITY ACCEPTANCE AND PROJECT CLOSEOUT

Quality assurance procedures during project development, design, and construction assure that all safety, operational and Subcontract requirements will be met. The established system to review, inventory, and document facility construction, acceptance, and project closeout includes the following elements:

- Engineering

  - The LBL Facilities Department assisted by selected consultants provides quality control and assurance measures during design and construction.

  - The Architecture and Engineering Group of the Facilities Department includes multidisciplinary design and project management sections. Each significant project is assigned to a Project Manager (PM) who is responsible for the management of cost, scope and schedule. The PM is also responsible for quality assurance during project formulation and implementation, and is assigned a staff including a Project Architect or Engineer (PA/E), a multidisciplinary support team, a construction manager if necessary, a contract administrator, and a construction inspector. The PA/E is responsible for design and technical quality control. The work of each member of the PA/E's support team is reviewed by the appropriate discipline Section Chief. The PM develops a Project Management Plan which is reviewed and approved by Facilities Management and DOE/SF.

  - Design and cost estimates are reviewed and a plan check carried out by LBL at completion of schematics and during and after Title I and Title II designs are completed. An independent third party plan check is made of the seismic design and an independent cost estimate is made by a consulting cost estimator at completion of Title I and Title II to compare with the A&E's cost estimate. Plans and specifications are also reviewed by the LBL Fire Marshal, the LBL Environment, Health and Safety (EH&S) Division, the LBL Energy Conservation Engineer, and the LBL Facilities Maintenance and Operations Group at each stage of design development. When applicable, a consulting geotechnical firm provides appropriate geotechnical data and reviews the design at each stage of design and during construction.

  - An internal sign-off sheet covering all LBL design disciplines, PA/E, PM, Fire Marshal, EH&S, Facilities Management, third party reviews, and the Client is completed at the end of Title I, Title II and Title III. (A sample form follows.)

- Construction

  - Subcontract documents are reviewed by LBL's technical staff for compliance with DOE and LBL design criteria.

- The Construction Inspector reviews and the Executive Architect and Engineer (A&E of Record) and Facilities' staff of engineers accept or reject all materials and workmanship in accordance with Subcontract documents.

- A submittal control system for materials, shop drawings, test reports, and certifications assures that all necessary reviews for compliance with specifications, codes, environmental mitigation measures and other requirements including provisions for the handicapped and energy conservation have been made.

- A Construction Inspector observes construction activities and reports discrepancies to LBL's Project Manager (or Construction Manager, if applicable) and the Project Architect/Engineer. Daily inspection reports are maintained in a file or a project logbook.

- A Contract Administrator (from the Purchasing Department) reviews documentation for compliance with Subcontract provisions.

- A Safety Inspector (from LBL's Environment, Health and Safety Division) and the Fire Marshal make periodic inspections of construction to assure compliance with safety and fire codes and regulations.

- Specialty inspections are made of rebar, structural steel, welding, concrete, and geotechnical conditions to assure compliance with codes and specifications. Appropriate testing laboratories are utilized for support as necessary. The A&E of Record is required to inspect the construction during appropriate times and provide interpretation of the Subcontract documents whenever necessary.

- Subcontract Change Orders

  - Reviewed in accordance with UC-LBL Construction Subcontracting Manual.

  - If project contingency funds are involved, the proposed change is reviewed to ensure that it is due to unforeseen, uncertain, and/or unpredictable conditions or incomplete design.

- Final Inspection and Acceptance

  The following items are accomplished by the Inspector and the A&E of Record working together:

  - Preliminary inspection and list of incomplete work.

  - Equipment testing and operational instruction of LBL personnel.

  - Final inspection walk-through and punch list.

  - Inspection of correctional and completion work (punch list work).

- Inventory of all operational manuals, instructions, guarantees.
- Internal sign-off sheet: Acknowledgment of completion and acceptance of all work under construction Subcontract by the LBL project team and all interested parties, i.e., Fire Marshal, EH&S, etc.
- Subcontract Change Orders
  - The LBL A&E team and Executive Architect and Engineer review any proposed change and provide justification and an independent cost estimate. The Subcontractor's proposed cost is evaluated relative to LBL's cost estimate, and a Subcontract price is negotiated. Availability of project funds is verified. If all project and Subcontract requirements are met, a Change Order is executed.

- Project Closeout
  - After final acceptance of the facility, LBL audits all charges to assure that all costs are in proper accounts.
  - LBL sends the cost closing statement to DOE/SF.
  - Project authorization closed by DOE/SF.

PROJECT REVIEW AND APPROVAL
(Projects ≥ $250K TEC)

_____
Project Title

_____
Job Number | Subcontract No/PB No | Documents Prepared By:

☐ PRELIM (TITLE I) ☐ FINAL (TITLE II) ☐ CONSTR COMPLETE (TITLE III)

☐ SPECIFICATIONS ☐ DRAWINGS

1. Facilities Department

1a. Design Team		1b. Section Chiefs		1c. Project Management	
Proj A/E	_____			Project Manager	_____
Arch	_____	Arch	_____	Inspector	_____
Civil	_____	Civil	_____		
Mech	_____	Mech	_____	2. Purchasing Department	
Elec	_____	Elec	_____	Contract Admin (Titles II & III only) (Last to sign for Title III)	_____
Energy	_____	Energy	_____		

3. Environment, Health and Safety Division	Date	8. Third Party Structural Review or Recommendation (Memo Attached)	Date
4. Fire Marshal	Date	9. Quality Assurance Coordinator	Date
5. Facilities Dept/Associate Facility Manager Maintenance and Operations	Date	10. Value Engineering Coordinator	Date
6. Disabled Barriers Review/ Chief Architect	Date	11. Client/Division Head	Date
7. Third Party Hazardous Material Review or Recommendation (Memo Attached)	Date	12. Facilities Dept/Associate Facility Manager A&E	Date

Sign-offs (Title I) indicate that project scope and criteria fully define Title II design requirements.

Sign-offs (Title II) indicate that construction documents comply with applicable sections of DOE General Design Criteria Manual 6430.1A and that they're complete and ready for construction.

Sign-offs (Title III) indicate that work was completed in accordance with construction documents.

SUPPLEMENTARY PROJECT DATA
FACILITY UTILIZATION

Title and Location of Project ALS Beamlines Initiative Project No. 96-LBL

Lawrence Berkeley Laboratory, Berkeley, California

Site-wide Requirements/Assets for CATEGORY 10 , Office

Other Projects Affecting this Category: ALS Struc Biology Supp Fac, Human Genome Lab, Safety and Support Services Facility , etc.

Unit of Measure: GSF (square feet (SF) or other unit)

UTILIZATION OF EXISTING ASSETS (FACILITIES) IN THIS CATEGORY:

A.	Total requirement for this category:	532,600	in SF or other unit
B.	The total existing assets in this category:	460,300	SF
C.	Less amount of existing, substandard assets:	357,100	SF
D.	Equals amount of existing, adequate assets:	103,200	SF
E.	Existing adequate assets, less total requirement for this category equals excess/(deficiency) of adequate assets:	(429,400)	SF (D minus A)

CHANGES TO ASSET LEVELS RESULTING FROM THIS PROJECT:

F.	The additional assets created in this category by the project:	7,300	SF
G.	Less assets removed from this category by the project through excessing, demolition, etc.:	0	SF
H.	Equals net increase/(decrease) of assets in this category due to the project:	7,300	SF (F minus G)

PROJECTED ASSET STATUS AFTER COMPLETION OF THIS PROJECT:

I.	Existing excess or (deficiency) of adequate assets, plus this project's increases, equal excess or (deficiency) of adequate assets projected for this category:	(422,100)	SF (E plus F)
J.	Total existing assets, plus net increase/(decrease) of assets in this category due to the project, less total requirement, equal total excess/(deficiency) of assets projected for this category:	(65,000)	SF (B plus H minus A)

Figure III-5
Facility Utilization Data

SUPPLEMENTARY PROJECT DATA
FACILITY UTILIZATION

Title and Location of Project ALS Beamlines Initiative Project No. 96-LBL

Lawrence Berkeley Laboratory, Berkeley, California

Site-wide Requirements/Assets for CATEGORY 73 , Light Lab

Other Projects Affecting this Category: ALS Struc Biology Supp Fac, Human Genome Lab , etc.

Unit of Measure: GSF (square feet (SF) or other unit)

UTILIZATION OF EXISTING ASSETS (FACILITIES) IN THIS CATEGORY:

A.	Total requirement for this category:	330,900	in SF or other unit
B.	The total existing assets in this category:	278,700	SF
C.	Less amount of existing, substandard assets:	189,200	SF
D.	Equals amount of existing, adequate assets:	89,500	SF
E.	Existing adequate assets, less total requirement for this category equals excess/(deficiency) of adequate assets:	(241,400)	SF (D minus A)

CHANGES TO ASSET LEVELS RESULTING FROM THIS PROJECT:

F.	The additional assets created in this category by the project:	7,500	SF
G.	Less assets removed from this category by the project through excessing, demolition, etc.:	0	SF
H.	Equals net increase/(decrease) of assets in this category due to the project:	7,500	SF (F minus G)

PROJECTED ASSET STATUS AFTER COMPLETION OF THIS PROJECT:

I.	Existing excess or (deficiency) of adequate assets, plus this project's increases, equal excess or (deficiency) of adequate assets projected for this category:	(233,900)	SF (E plus F)
J.	Total existing assets, plus net increase/(decrease) of assets in this category due to the project, less total requirement, equal total excess/(deficiency) of assets projected for this category:	(44,700)	SF (B plus H minus A)

SUPPLEMENTARY PROJECT DATA
FACILITY UTILIZATION

Title and Location of Project ALS Beamlines Initiative Project No. 96-LBL

Lawrence Berkeley Laboratory, Berkeley, California

Site-wide Requirements/Assets for CATEGORY 80 , Miscellaneous

Other Projects Affecting this Category: Human Genome Lab, Safety and Support Services Facility, ALS Structural Biology Supp Facl , etc.

Unit of Measure: GSF (square feet (SF) or other unit)

UTILIZATION OF EXISTING ASSETS (FACILITIES) IN THIS CATEGORY:

A.	Total requirement for this category:	177,900	in SF or other unit
B.	The total existing assets in this category:	161,900	SF
C.	Less amount of existing, substandard assets:	119,800	SF
D.	Equals amount of existing, adequate assets:	42,100	SF
E.	Existing adequate assets, less total requirement for this category equals excess/(deficiency) of adequate assets:	(135,800)	SF (D minus A)

CHANGES TO ASSET LEVELS RESULTING FROM THIS PROJECT:

F.	The additional assets created in this category by the project:	5,400	SF
G.	Less assets removed from this category by the project through excessing, demolition, etc.:	0	SF
H.	Equals net increase/(decrease) of assets in this category due to the project:	5,400	SF (F minus G)

PROJECTED ASSET STATUS AFTER COMPLETION OF THIS PROJECT:

I.	Existing excess or (deficiency) of adequate assets, plus this project's increases, equal excess or (deficiency) of adequate assets projected for this category:	(130,400)	SF (E plus F)
J.	Total existing assets, plus net increase/(decrease) of assets in this category due to the project, less total requirement, equal total excess/(deficiency) of assets projected for this category:	(10,600)	SF (B plus H minus A)

Figure III-5
Facility Utilization Data

ALS BEAMLINES INITIATIVE

CONVENTIONAL FACILITIES

SECTION 3

BASIS OF COST ESTIMATE

The cost estimate for the construction of Conventional Facilities improvements for the ALS Beamlines Initiative on the second floor of Building 6 was prepared by Gosliner/McLean Associates, Inc., Consultants, based upon quantity take-offs from conceptual design drawings and specifications developed by Keller and Gannon, Engineers and Architects.

Conventional Construction Cost Estimates are dated April 1992 and represent FY 1992 costs. Summary Cost Estimates in FY 1992 $K and "Then Year" (TY) $K for Conventional Facilities are included in this section. Detailed cost estimates are included in Section 9. Escalation is based upon "Anticipated Economic Escalation Rates for DOE Construction Projects" updated August 1993, namely 1.8% in FY 1992, 2.6% in FY 1993, 3.4% in FY 1994, 4.0% in FY 1995, 3.9% in FY 1996, and 3.8% in FY 1997. Escalation rates are compounded from the date of the estimate to the midpoint of construction.

Cost estimates in Section 9 for the Special Building Facilities, Schedule I, and Standard Equipment, Schedule II, are based upon recent experience, vendor quotations, and discounted catalog data.

An ED&I Analysis for Conventional Facilities is included in Section 9. All Conventional Facilities estimates have been integrated into the Work Breakdown Structure for the entire project (see Appendix B).

ALS BEAMLINES INITIATIVE

CONVENTIONAL FACILITIES

FINANCIAL SCHEDULE AND SUMMARY COST ESTIMATE

(TY $K)

Financial Schedule:

Fiscal Year	Obligations	Costs
1996	$ 700	$ 500
1997	4,700	2,800
1998	600	2,700

Summary of Cost Estimate:

WBS			
1.3.1	ED&I (@ about 15% of Construction)		$ 650
1.3.2	CONSTRUCTION		4,350
	Land Improvements	0	
	Building	3,020	
	Special Building Facilities (Summary Schedule I)	540	
	Utilities	790	
1.3.3	STANDARD EQUIPMENT (Summary Schedule II)		140
		Subtotal	5,140
1.4.3	Contingency (approximately 17%)		860
	Conventional Facilities - Total Estimated Cost		6,000

ALS BEAMLINES INITIATIVE

CONVENTIONAL FACILITIES

SCHEDULE I
(TY $K)

Special Building Facilities		
Laboratory Benches		158
Chemical Storage Cabinets		13
Fume Hoods		75
Laminar Flow Hoods		44
Acid Neutralization System		5
UHV Workstations		44
Demountable Office Systems Furniture and Partitions		205
	Total	544*

SCHEDULE II
(TY $K)

Standard Equipment		
Laboratory Furniture		33
Office Furniture		84
Office Equipment		19
	Total	136

*Included in Construction and A/E Subcontracts

ALS BEAMLINES INITIATIVE

CONVENTIONAL FACILITIES

CONSTRUCTION COST SUMMARY

	Estimate April 1992	Escalate 20.1% to September 1997
Land Improvements	---	---
Building	2,515,560	3,021,190
Special Building Facilities	452,400	543,330
Utilities	657,720	789,920
Total Estimated Construction Cost	3,625,680	4,354,440

ALS BEAMLINES INITIATIVE

CONVENTIONAL FACILITIES

ESTIMATE SUMMARY

CONSTRUCTION - BUILDING

DIV			
3	Concrete		26,790
5	Metals		162,030
6	Wood and Plastics		42,240
7	Thermal/Moisture Protection		41,030
8	Doors/Windows		133,350
9	Finishes		404,130
10	Specialties		22,540
11	Equipment		3,000
12	Furnishings		15,450
14	Conveying Systems		140,000
15	Mechanical: Plumbing		285,990
	HVAC		496,770
	Fire Protection		52,200
16	Electrical		239,800
	Subtotal Direct Cost		2,065,320
	General Conditions/Mobilize	5.0%	103,270
	Estimating Contingency		*In Project Contingency*
			2,168,590
	Bond	2.0%	43,370
	Prime Contractor OH & Fee	14.0%	303,600
	Total Estimated Construction Cost at April 1992		2,515,560
	Total Escalated Construction Cost to September 1997	20.1%	3,021,190

ALS BEAMLINES INITIATIVE

CONVENTIONAL FACILITIES

ESTIMATE SUMMARY

CONSTRUCTION - SPECIAL BUILDING FACILITIES

Laboratory Benches		108,000
Chemical Storage Cabinets		9,000
Fume Hoods		51,000
Laminar Flow Hoods		30,000
Acid Neutralization System		3,430
UHV Workstations		30,000
Demountable Office Systems		
Furniture and Partitions		140,000
Subtotal Direct Cost		371,430
General Conditions/Mobilize	5.0%	18,570
Estimating Contingency		*In Project Contingency*
		390,000
Bond	2.0%	7,800
Prime Contractor OH & Fee	14.0%	54,600
Total Estimated Construction Cost at April 1992		452,400
Total Estimated Construction Cost to September 1997	20.1%	543,330

ALS BEAMLINES INITIATIVE

CONVENTIONAL FACILITIES

ESTIMATE SUMMARY

CONSTRUCTION - UTILITIES

Transformer and Switchgear Equipment		475,000
Ethernet Distribution		65,000
Subtotal Direct Cost		540,000
General Conditions/Mobilize	5.0%	27,000
Estimating Contingency		*In Project Contingency*
		567,000
Bond	2.0%	11,340
Prime Contractor OH & Fee	14.0%	79,380
Total Estimated Construction Cost at April 1992		657,720
Total Escalated Construction Cost to September 1997	20.1%	789,920

ALS BEAMLINES INITIATIVE

CONVENTIONAL FACILITIES

ESTIMATE SUMMARY

STANDARD EQUIPMENT

Laboratory Furniture		25,960
Office Furniture		66,500
Office Equipment		13,000
Subtotal Direct Cost		105,460
Storage, Handling, Delivery and Set-up	5.0%	5,270
Total Estimated Construction Cost at April 1992		110,730
Total Escalated Construction Cost to September 1997	20.1%	132,990

ALS BEAMLINES INITIATIVE

CONVENTIONAL FACILITIES

ESCALATION ANALYSIS

Based on DOE "Anticipated Economic Escalation Rates" (updated August 1993).

Start Construction:	February 1997
Construction Period:	16 Months
Finish Construction:	May 1998
Midpoint Construction:	September 1997
Estimate Date:	April 1992

									%		
FY	1992	Apr	1992	-	Sep	1992	6	mo	@ 1.8	=	0.9
FY	1993	Oct	1992	-	Sep	1993	12	mo	@ 2.6	=	2.6
FY	1994	Oct	1993	-	Sep	1994	12	mo	@ 3.4	=	3.4
FY	1995	Oct	1994	-	Sep	1995	12	mo	@ 4.0	=	4.0
FY	1996	Oct	1995	-	Sep	1996	12	mo	@ 3.9	=	3.9
FY	1997	Oct	1996	-	Sep	1997	12	mo	@ 3.8	=	3.8

Total Compounded Escalation **20.1**

ALS BEAMLINES INITIATIVE

CONVENTIONAL FACILITIES

OBLIGATIONS AND COSTS SCHEDULE

(TY $K)

		FY 1995		FY 1996		FY 1997	
DESCRIPTION	TOTAL	O	C	O	C	O	C
LBL Activities							
Engineering	130	70	70	30	30	30	30
Consultants	20	10	10	10	10		
Inspection	60	—	—	30	30	30	30
Subtotal	210	80	80	70	70	60	60
Architect/Engineer							
Title I	120	120	120				
Title II	210	210	170	0	40		
Title III	110	110	0	0	50	0	60
Subtotal	440	440	290	0	90	0	60
Total ED&I	650	520	370	70	160	60	120
Construction							
Land Improvements	0						
Building	3,020			3,020	1,450	0	1,570
Special Building Facilities	540			330	180	210	360
Utilities	790			790	680	0	110
Subtotal	4,350			4,140	2,310	210	2,040
Standard Equipment	140					140	140
Subtotal	5,140	520	370	4,210	2,470	410	2,300
Contingency (17%)	860	180	130	490	330	190	400
TOTAL	6,000	700	500	4,700	2,800	600	2,700

ALS BEAMLINES INITIATIVE

CONVENTIONAL FACILITIES

BA/BO SCHEDULE (TY $K)

WBS NO.	WBS ELEMENT	TOTAL BUDGET	FY 1996				FY 1997				FY 1998			
			1	2	3	4	1	2	3	4	1	2	3	4
			O N D	J F M	A M J	J A S	O N D	J F M	A M J	J A S	O N D	J F M	A M J	J A S
1.3	ALS Beamlines Initiatives Conventional Facilities													
1.3.1	Engineering, Design & Inspection													
1.3.1.1	LBL Activities													
1.3.1.1.1	Engineering	130			70/70				30/30			30/30		
1.3.1.1.2	Consultants	20			10/10				10/10					
1.3.1.1.3	Inspection	60							30/30			30/30		
1.3.1.2	A/E Activities													
1.3.1.2.1	Title I	120		120/120										
1.3.1.2.2	Title II	210			210/170		0/40							
1.3.1.2.3	Title III	110			110/0				0/50			0/60		
1.3.2	Construction													
1.3.3	Building	3020						3020/1450				0/1570		
1.3.4	Special Building Facilities	540								330/180		210/360		
1.3.5	Utilities	790						790/680			0/110			
1.3.6	Standard Equipment	140										140/140		
1.4.3	Contingency by Year	860/860	180 / 130				490 / 330				190 / 400			
	Total BA/BO by Year	6000/6000	700 / 500				4700 / 2800				600 / 2700			
	Current Funding Plan	6000	700				4700				600			

A&E:ALS-Beam:CDR
2/24/94

ALS BEAMLINES INITIATIVE

CONVENTIONAL FACILITIES

CONTINGENCY ANALYSIS

(FY 1992 $K)

	Estimated Cost ($K)	Contingency (%)	Contingency ($K)
LBL Activities			
Engineering	102	20	20
Consultants	17	20	3
Inspection	51	20	10
Architect/Engineer			
Title I	102	20	20
Title II	179	20	36
Title III	94	20	19
Construction Contract			
Improvements to Land	0		
Building	2,517	16	405
Special Building Facilities	452	20	90
Utilities	657	20	130
Standard Equipment	110	15	17
Subtotal	4,281		750
Contingency (17%)	750		
TOTAL	5,031		

DEPARTMENTAL PRICE CHANGE INDEX

FY 1996 GUIDANCE

ANTICIPATED ECONOMIC ESCALATION RATES

DOE CONSTRUCTION PROJECTS

FISCAL YEAR	ENERGY RESEARCH AND NUCLEAR		FOSSIL		CONSERVATION/SOLAR		DEFENSE PROGRAMS & GENERAL CONSTRUCTION	
	INDEX	%CHANGE	INDEX	% CHANGE	INDEX	% CHANGE	INDEX	%CHANGE
1993	0.967	2.6	0.967	2.4	0.969	2.6	0.973	2.0
1994	1.000	3.4	1.000	3.4	1.000	3.2	1.000	2.7
1995	1.040	4.0	1.040	4.0	1.039	3.9	1.033	3.3
1996	1.081	3.9	1.081	3.9	1.078	3.8	1.068	3.4
1997	1.122	3.8	1.121	3.8	1.117	3.6	1.104	3.3
1998	1.162	3.6	1.161	3.5	1.155	3.5	1.141	3.3
1999	1.205	3.7	1.204	3.7	1.196	3.6	1.180	3.4

Based on the materials and labor data contained in the Energy Supply Planning Model and appropriate escalation rates forecasted by Data Resources, Incorporated, it would be expected that DOE projects conform to those rates shown above. DOE Order 5700.2D requires that any local rates different from those above be submitted to the Program/Project Management Division for approval, prior to their use. Additional advice and assistance can be obtained from the Associate Deputy Secretary for Field Management, Program/Project Management Division (202) 586-1190.

DEPARTMENTAL PRICE CHANGE INDEX

AUGUST 1992 UPDATE

HISTORICAL AND ANTICIPATED ECONOMIC ESCALATION RATES FOR DOE CONSTRUCTION PROJECTS

FISCAL YEAR	ENERGY RESEARCH AND NUCLEAR	FOSSIL	CONSERVATION/SOLAR	DEFENSE PROGRAM, EP, & GENERAL CONSTRUCTION
Historical				
1974	10.4	11.3	10.7	9.6
1975	14.5	15.4	15.3	13.0
1976	6.1	6.0	5.7	5.2
1977	6.2	6.3	6.0	6.0
1978	7.1	7.3	6.8	7.3
1979	9.1	9.6	9.1	8.9
1980	9.7	10.1	10.7	9.7
1981	9.2	9.4	9.1	8.1
1982	6.8	6.6	6.5	6.3
1983	3.0	2.6	2.9	3.1
1984	2.4	2.2	2.4	2.4
1985	2.1	1.9	2.0	1.6
1986	1.3	0.6	1.3	1.1
1987	1.9	1.8	1.8	1.8
1988	4.0	4.7	4.0	3.2
1989	4.2	4.4	4.5	3.2
1990	3.1	2.4	3.0	2.9
1991	2.7	2.2	2.7	2.2
1992	1.8	1.4	1.5	0.9
Anticipated		FOR ANTICIPATED, PLEASE SEE	August 1993	UPDATE
~~1993~~	3.0	3.1	2.8	~~2.4~~
1994	3.9	4.0	3.8	3.1
1995	~~4.1~~	4.1	4.1	3.5
1996	4.3	4.3	~~4.2~~	3.7
1997	4.5	~~4.5~~	4.3	3.8
1998	4.5	~~4.4~~	4.4	3.8
1999	4.5	4.4	~~4.4~~	3.9
2000	~~4.6~~	4.6	4.5	3.9
2001	4.7	4.6	4.5	4.0
~~2002~~	4.7	4.6	4.5	~~4.0~~

Based on the materials and labor data contained in the Energy Supply Planning Model and appropriate escalation rates forecasted by Data Resources, Incorporated (DRI), it would be expected that DOE projects would generally conform to, or be less than, those rates shown above. Should a submission reflect a higher escalation rate, the rate must be derived from a locally-produced forecasting model validated by the Independent Cost Estimating (ICE) Staff. Additional advice and assistance can be obtained from the ICE Staff (FTS (202) 586-1190).

ALS BEAMLINES INITIATIVE

CONVENTIONAL FACILITIES

SECTION 4

BASIS OF PROJECT TIME SCHEDULE

It is assumed that project funding will be made available for commitments by the Lawrence Berkeley Laboratory (LBL) on January 1, 1996.

Prior to that time LBL will evaluate environmental conditions and prepare recommendations for NEPA documentation for DOE consideration beginning in November 1994 for completion by July 1995. It is anticipated that the project scope will fall within the action described in the Environmental Assessment (EA) for the original 1-2 GeV Synchrotron Light Source project, however, the review will be scheduled with sufficient contingency to permit an Environmental Impact Statement to be prepared if necessary before construction is scheduled.

A/E selection will take place between January and July 1995 during which time the Design Program necessary for A/E fee negotiations and a Project Management Plan for DOE will also be completed.

A/E fee negotiations will take place between October 1 and December 1, 1995 contingent upon assurance by DOE/SF that the project is in the FY 1996 budget.

Alternative solutions including environmental considerations have been carefully studied in the process of developing this conceptual design, thus it is anticipated that the existing solution will be specified for A/E design.

The Project Time Schedule that follows is based upon the foregoing assumptions.

ALS BEAMLINES INITIATIVE

CONVENTIONAL FACILITIES

TIME SCHEDULE

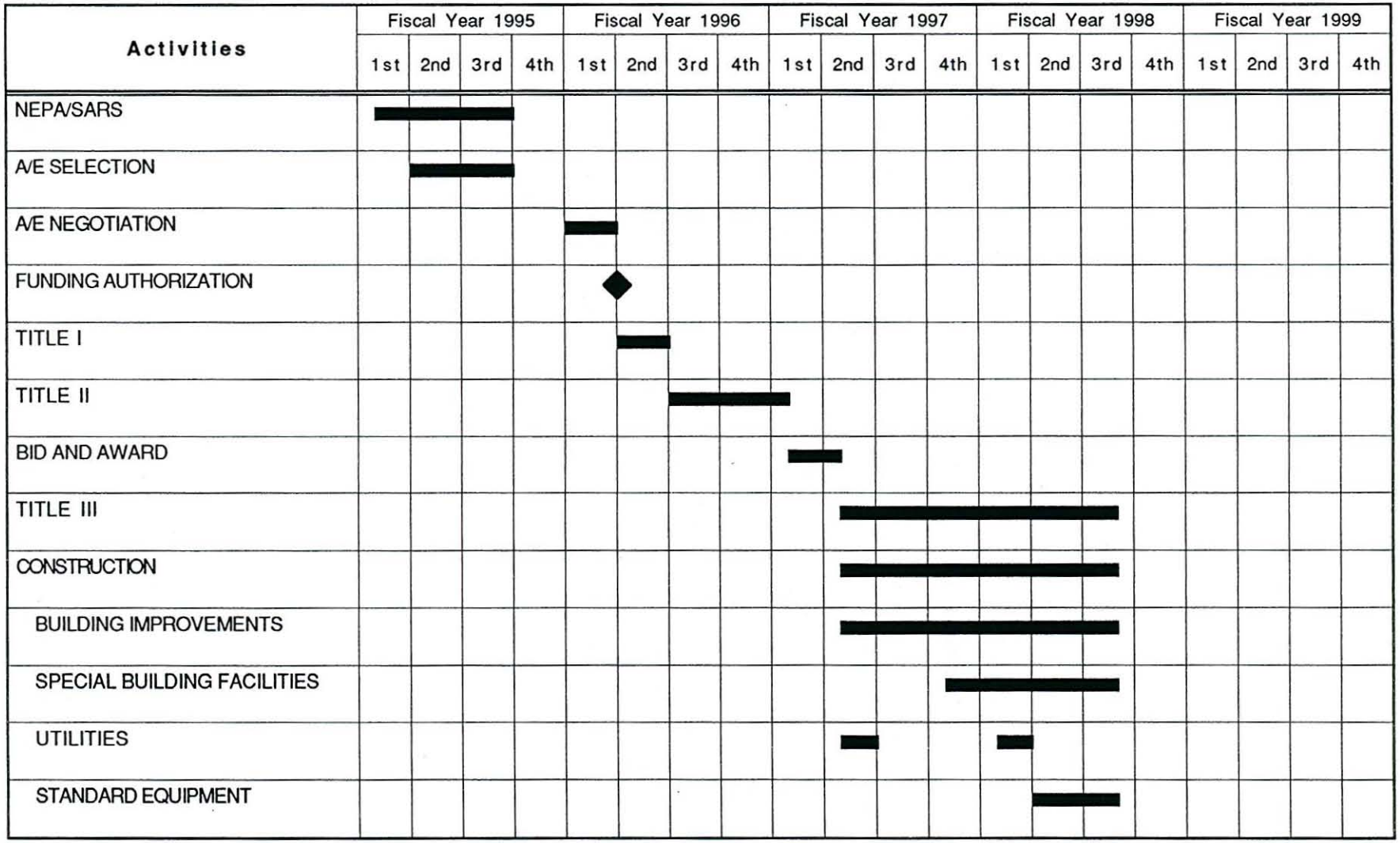

01/19/94
A&E:ALS-Beam:CDR

ALS BEAMLINES INITIATIVE

SECTION 5

PROJECT DRAWINGS

A-1	Location Plan
A-2	Second Floor Plan - North
A-3	Second Floor Plan - South
A-4	Roof Plan
A-5	Sections
M-1	HVAC Plan - North
M-2	HVAC Plan - South
M-3	Air Flow and Control Diagram
E-1	Fixture Schedule, Symbols, One-Line and Riser Diagrams
E-2	Lighting Plan - North
E-3	Lighting Plan - South
E-4	Power, Telephone, and Signal Systems Plan - North
E-5	Power, Telephone, and Signal Systems Plan - South

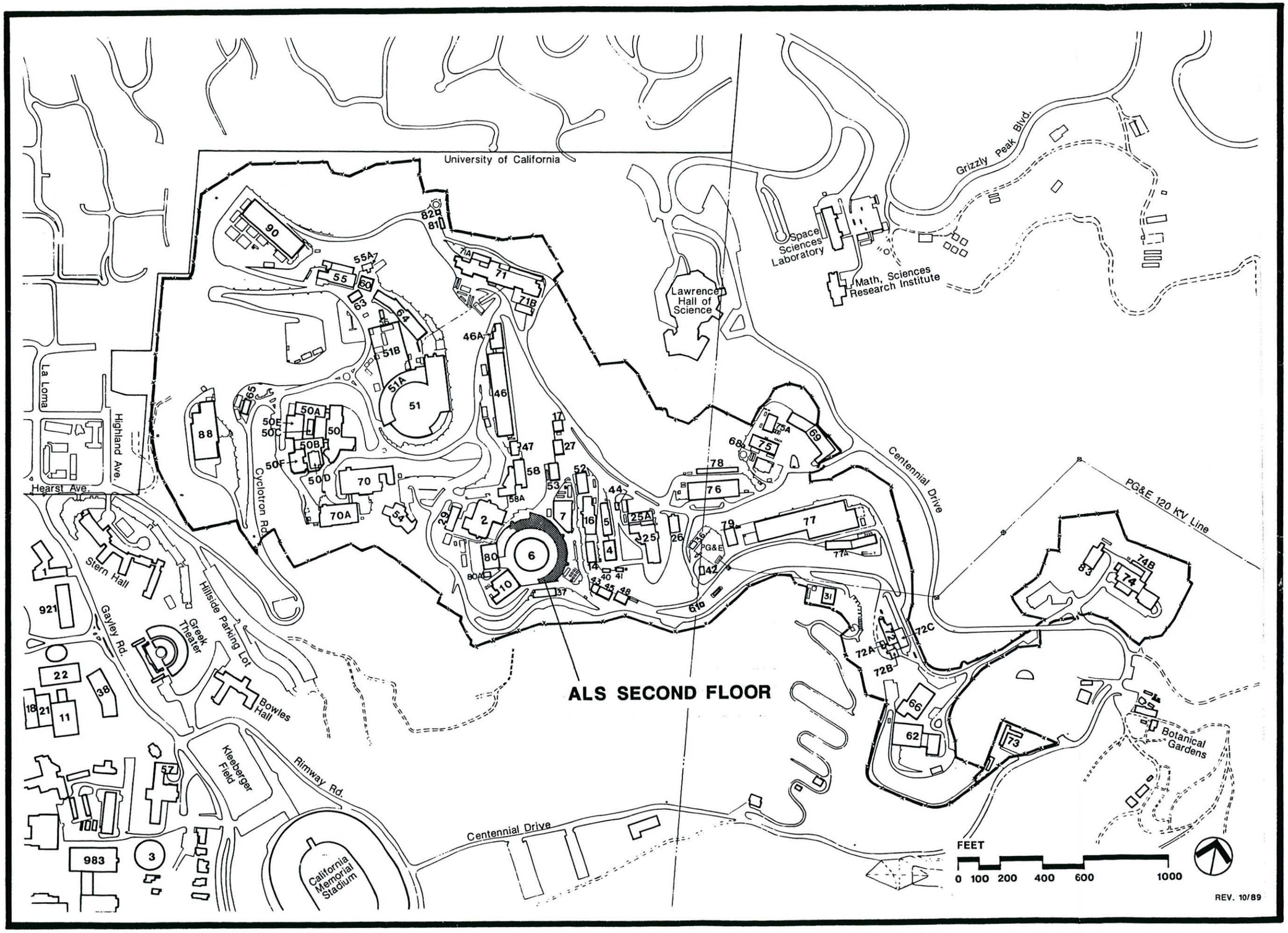

A-1

ALS BEAMLINES INITIATIVE

LOCATION PLAN

LAWRENCE BERKELEY LABORATORY
UNIVERSITY OF CALIFORNIA

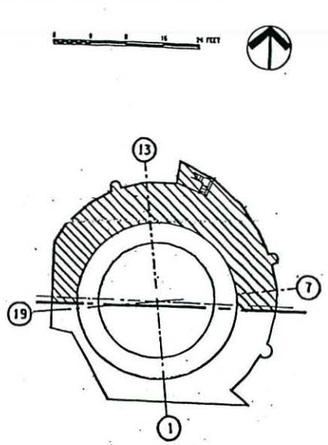

KEY PLAN

1 UPPER LOBBY
2 RECEPTION/EXHIBIT
3 COMMON
4 KITCHEN
5 MEN
6 WOMEN
7 JANITOR
8 SECRETARIES/COPY
9 LIBRARY / CONFERENCE
10 CONFERENCE
11 SECRETARY
12 OFFICE SUITE
13 OPEN OFFICES
14 2-MAN OFFICE
15 WET LAB
16 DRY LAB
17 STORAGE
18 TEAM AREA
19 UTILITY CLOSET
20 MAIL ROOM
21 1-MAN OFFICE
22 DARK ROOM

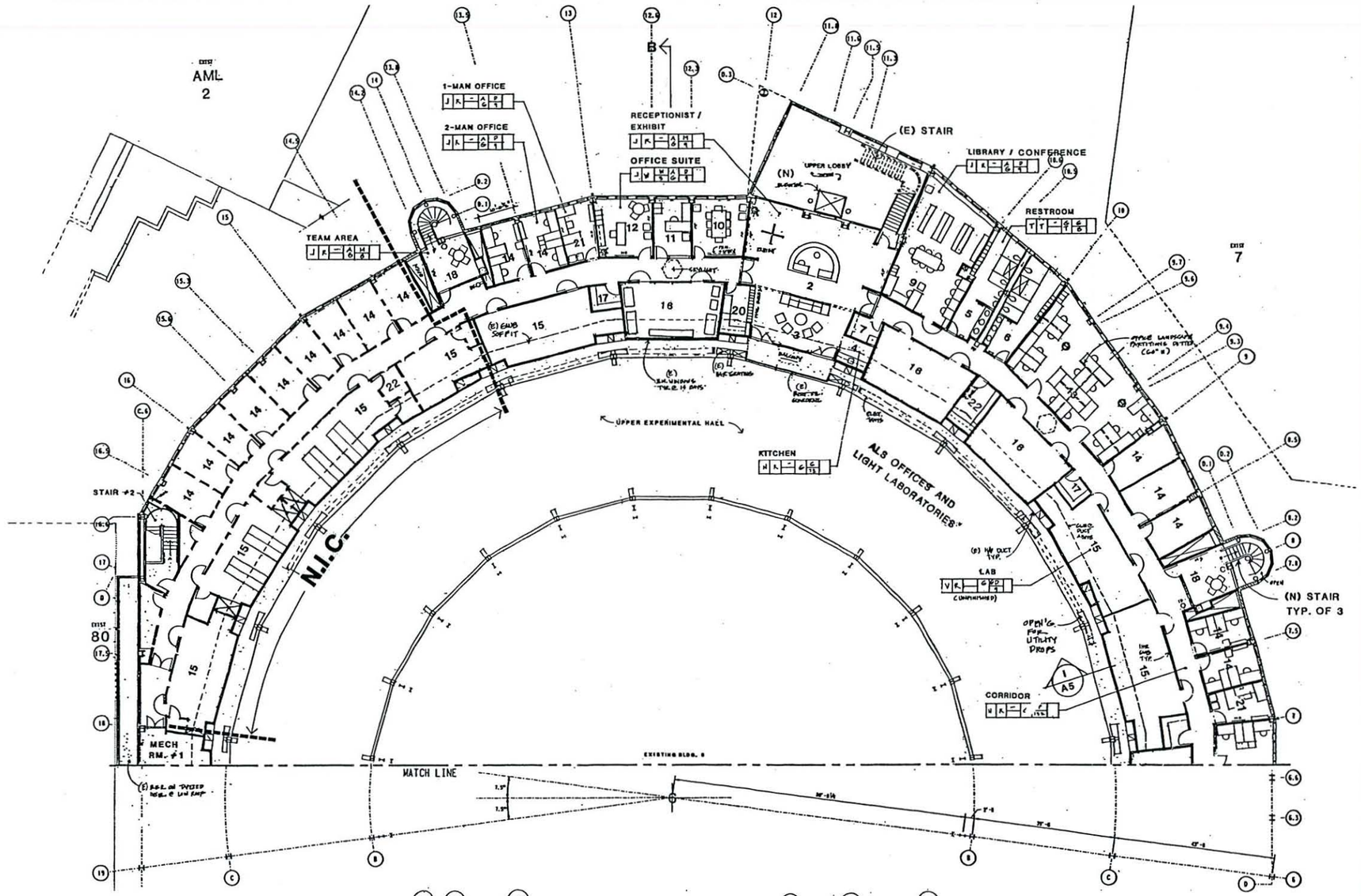

2ND FLOOR PLAN - NORTH

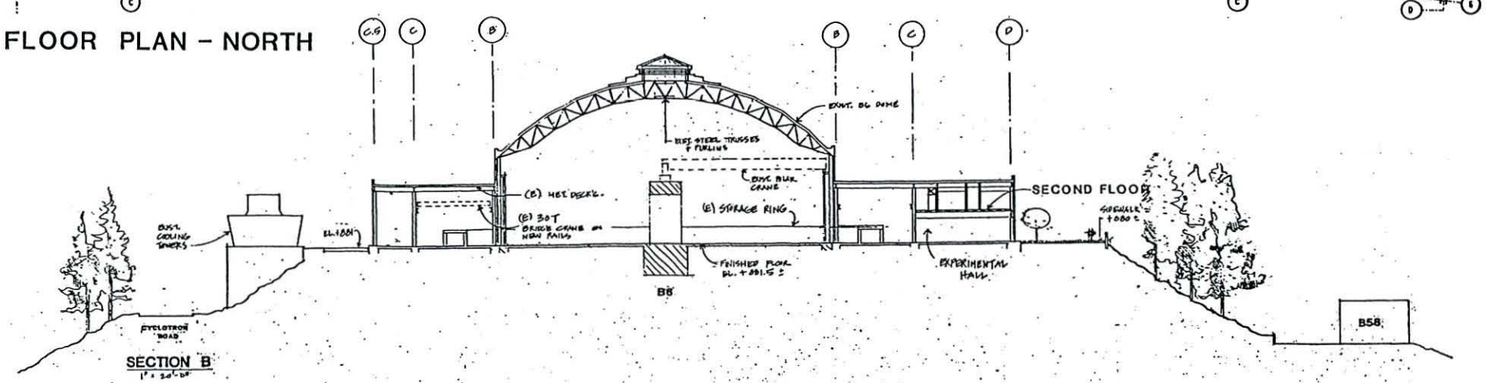

SECTION B

KEY TO FINISHES					
SEE FLOOR PLAN FOR FINISHES (FLOOR, BASE, WAINSCOT, WALL, CEILING, COLOR CODE, HEIGHT)					
A	ACOUSTIC PANEL	H	LOCK'G. PAVERS	P	PAINT
B	ACOUSTIC BOARD	J	CARPET	R	RESILIENT BASE
C	ACOUSTIC TILE	K	RUBBER TILE	S	COLOR SEALER
D	TEE GRID CLG.	L	PLASTIC LAM.	T	CERAMIC TILE
E		M	PLENUM MASK	U	UNFINISHED
F	CEMENT PANELS	N	COMP. TILE	V	
G	GYPSUM BD.	O	METAL GRID	W	WOOD

NOTES:

A-2

ALS BEAMLINES INITIATIVE
SECOND FLOOR PLAN - NORTH

LAWRENCE BERKELEY LABORATORY
UNIVERSITY OF CALIFORNIA

DIETERICH POST REORDER NO. 111543

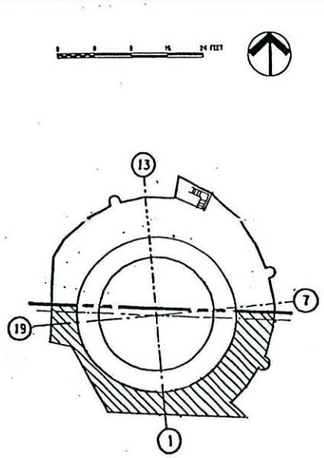

KEY PLAN

13 OPEN OFFICES
14 2-MAN. OFFICE
15 LAB "A"
16 LAB "B"
17 STORAGE
18 TEAM AREA
19 UTILITY CLOSET

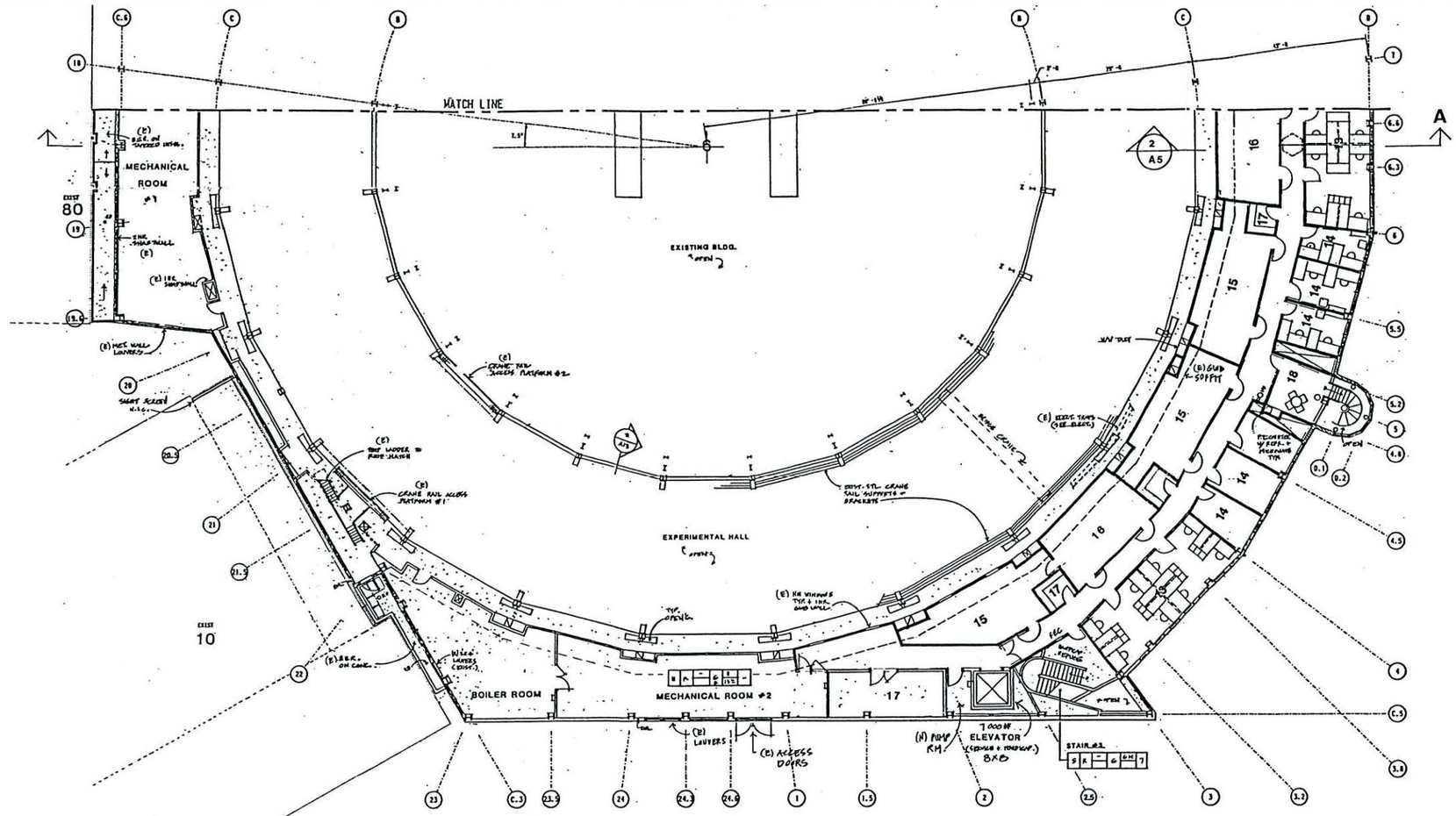

2ND FLOOR PLAN - SOUTH

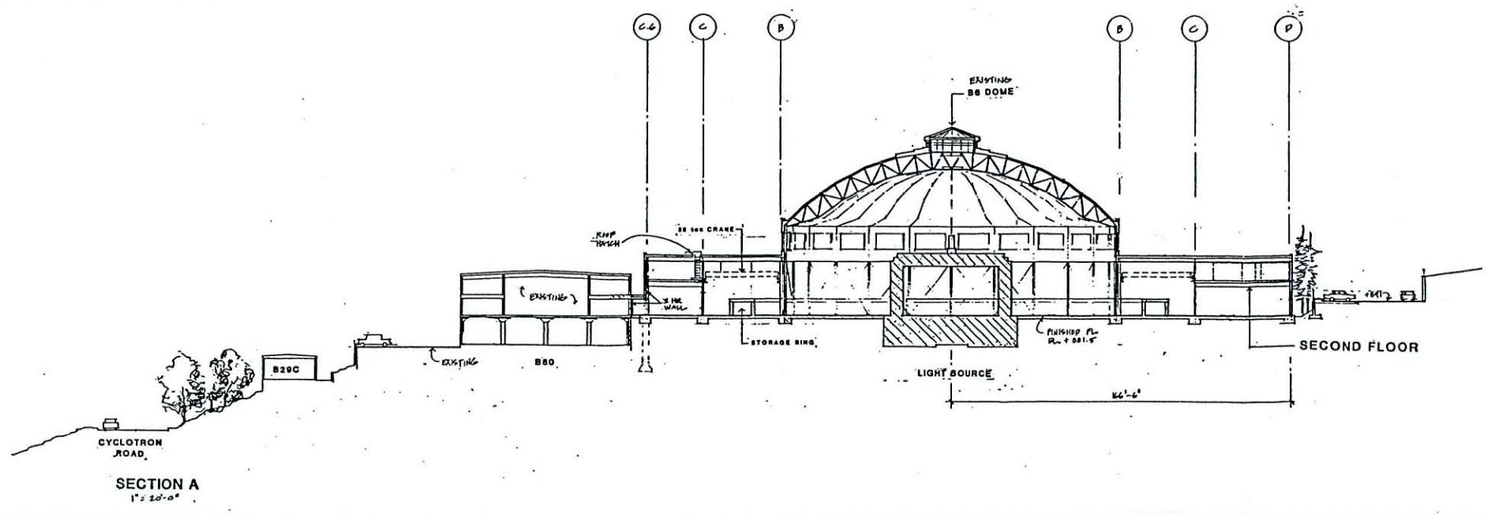

SECTION A
1" = 20'-0"

KEY TO FINISHES					
SEE FLOOR PLAN FOR FINISHES (FLOOR, BASE, WAINSCOT, WALL, CEILING, COLOR CODE, HEIGHT)					
A	ACOUSTIC PANEL	H	LOCK'G. PAVERS	P	PAINT
B	ACOUSTIC BOARD	J	CARPET	R	RESILIENT BASE
C	ACOUSTIC TILE	K	RUBBER TILE	S	COLOR SEALER
D	TEE GRID CLG.	L	PLASTIC LAM.	T	CERAMIC TILE
E		M	PLENUM MASK	U	UNFINISHED
F	CEMENT PANELS	N	COMP. TILE	V	
G	GYPSUM BD.	O	METAL GRID	W	WOOD

NOTES:

A-3

ALS BEAMLINES INITIATIVE

SECOND FLOOR PLAN - SOUTH

LAWRENCE BERKELEY LABORATORY
UNIVERSITY OF CALIFORNIA

DIETERICH POST REORDER NO. 132542

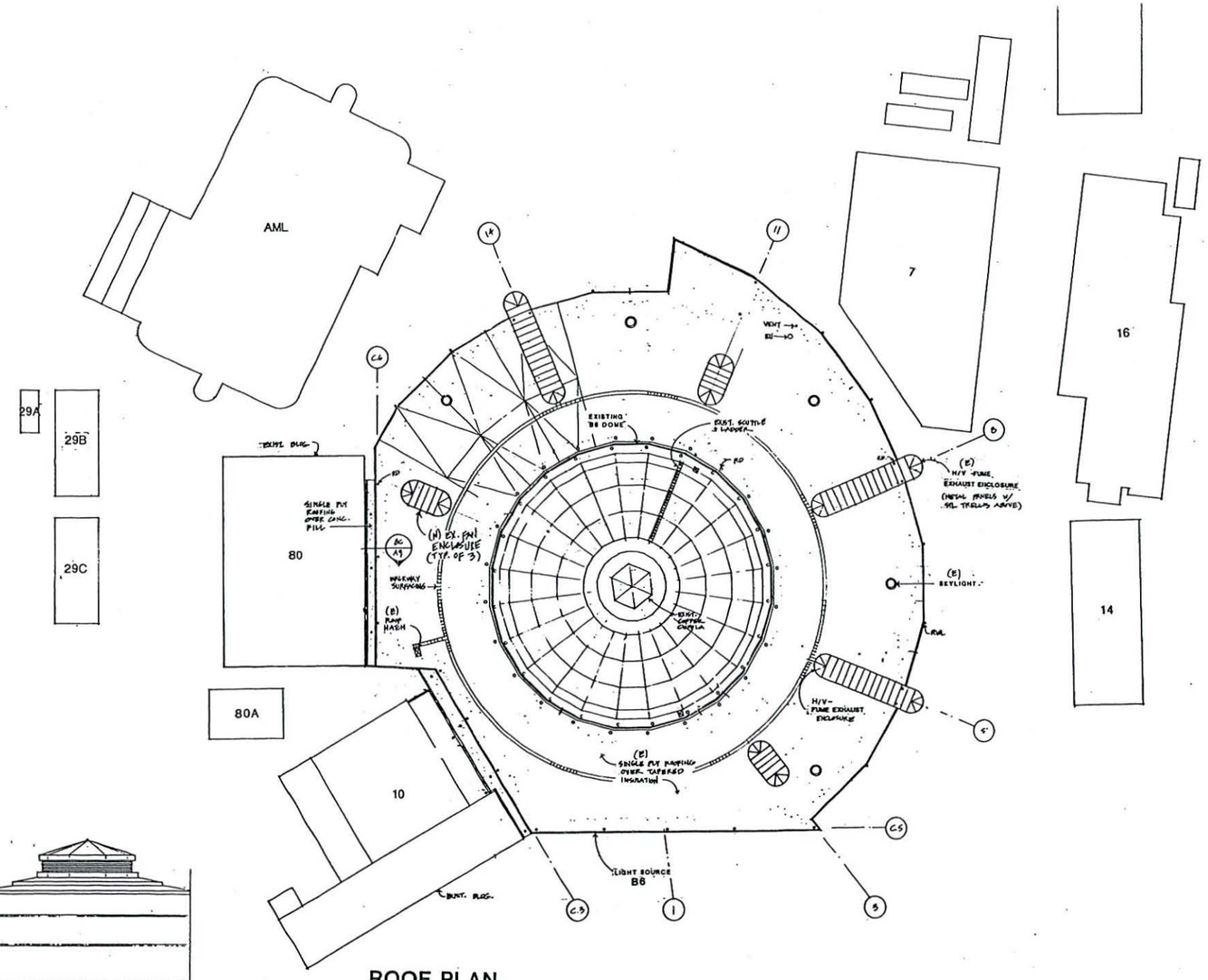

ROOF PLAN

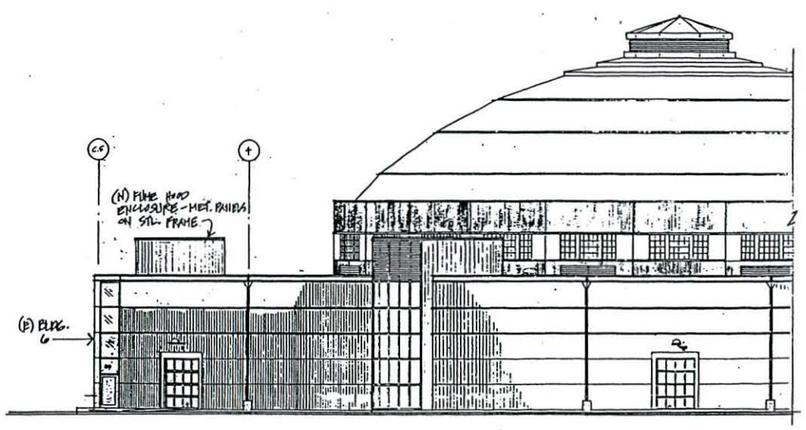

WEST ELEVATION

1/16" = 1'-0"

GRAPHIC SCALE 1" = 30'

A-4

ALS BEAMLINES INITIATIVE

ROOF PLAN

LAWRENCE BERKELEY LABORATORY
UNIVERSITY OF CALIFORNIA

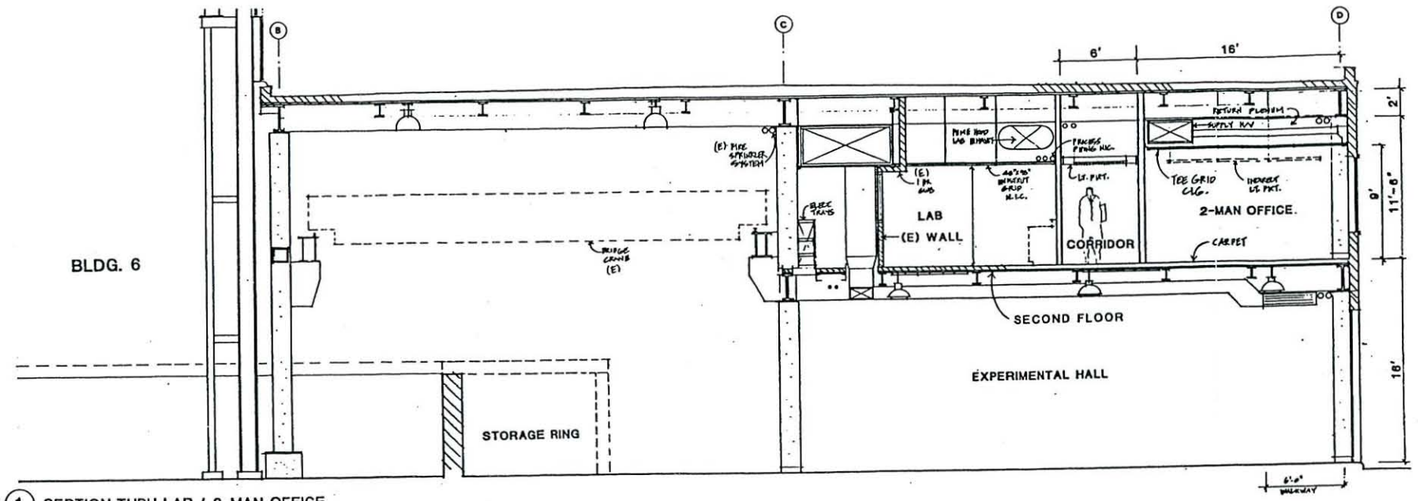

1 SECTION THRU LAB / 2-MAN OFFICE

3/16" = 1'-0"

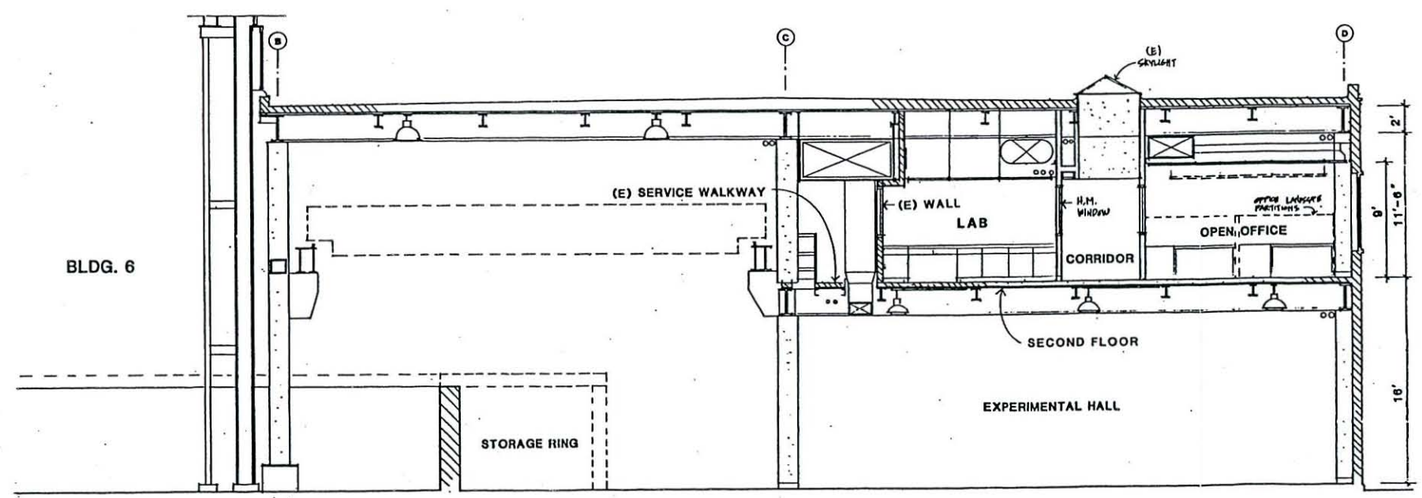

2 SECTION THRU 4-MAN & OPEN OFFICES

3/16" = 1'-0"

A-5

ALS BEAMLINES INITIATIVE

SECTIONS

LAWRENCE BERKELEY LABORATORY
UNIVERSITY OF CALIFORNIA

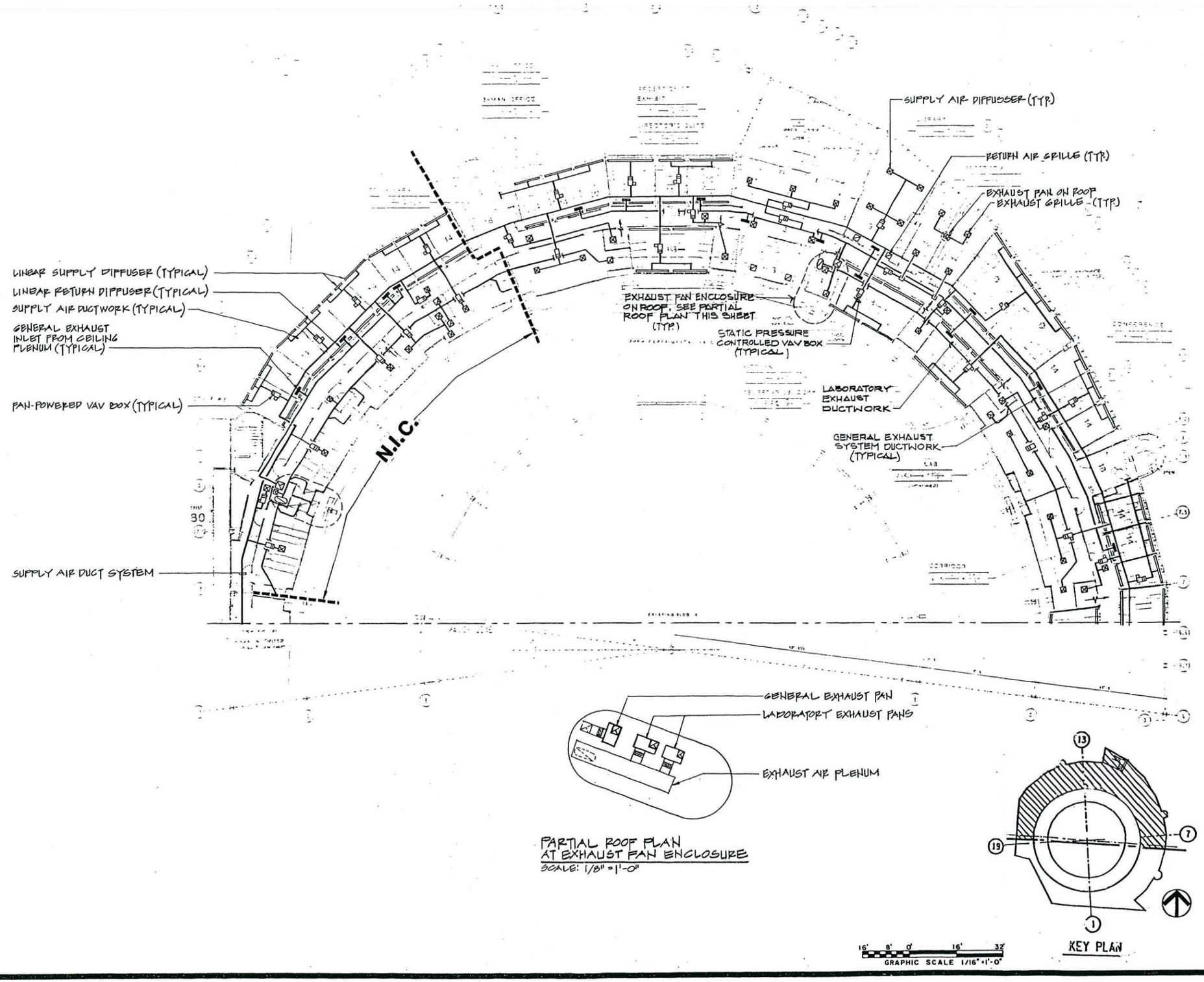

M-1

ALS BEAMLINES INITIATIVE

HVAC PLAN - NORTH

LAWRENCE BERKELEY LABORATORY
UNIVERSITY OF CALIFORNIA

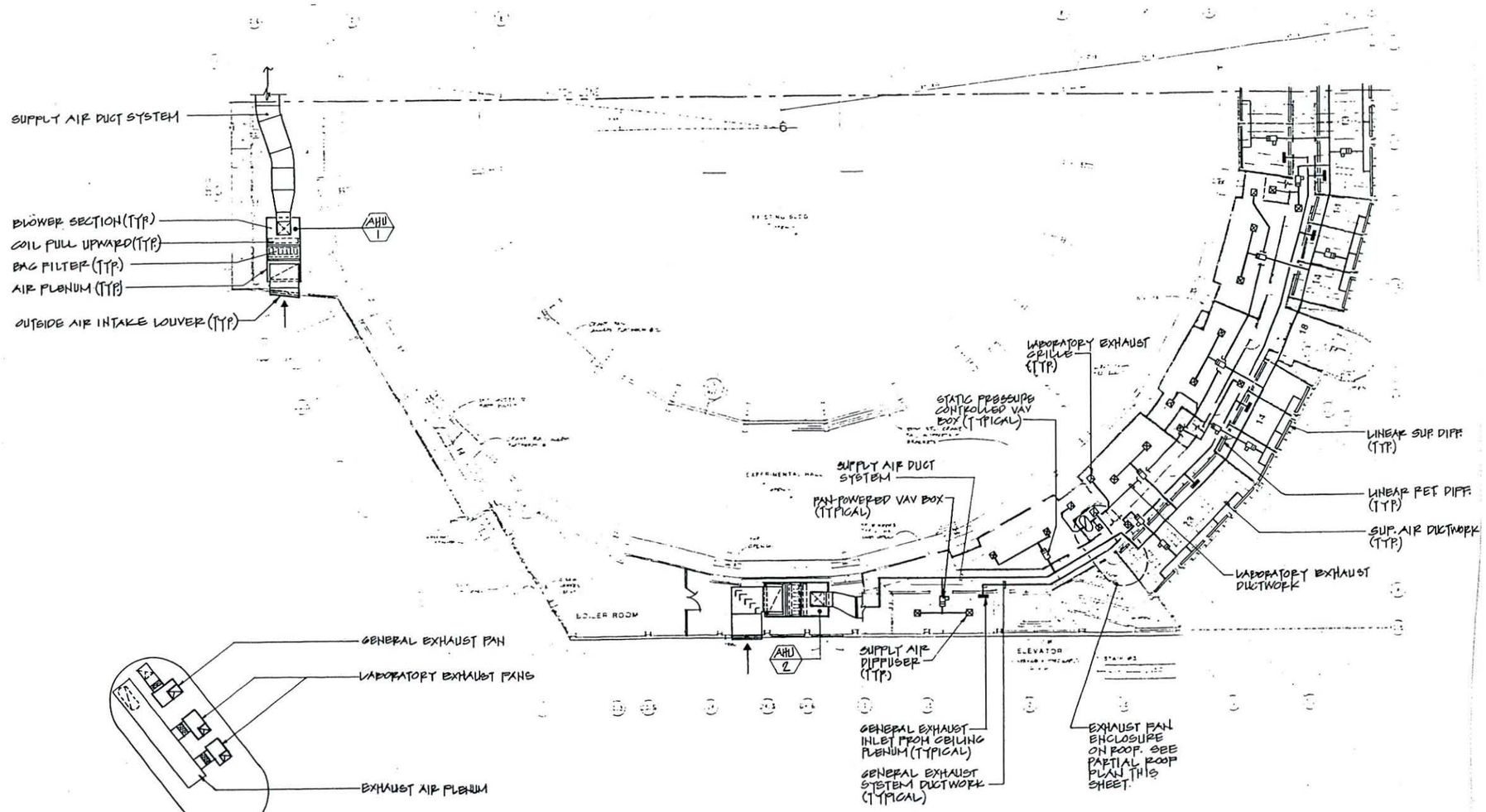

PARTIAL ROOF PLAN
AT EXHAUST FAN ENCLOSURE
SCALE: 1/8" = 1'-0"

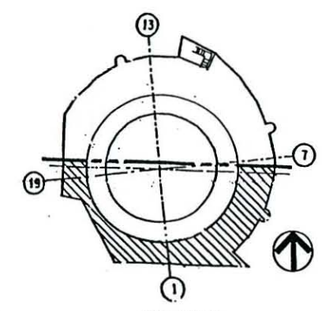

KEY PLAN

16' 8' 0' 16' 32'
GRAPHIC SCALE 1/16" = 1'-0"

M-2

ALS BEAMLINES INITIATIVE

HVAC PLAN - SOUTH

LAWRENCE BERKELEY LABORATORY
UNIVERSITY OF CALIFORNIA

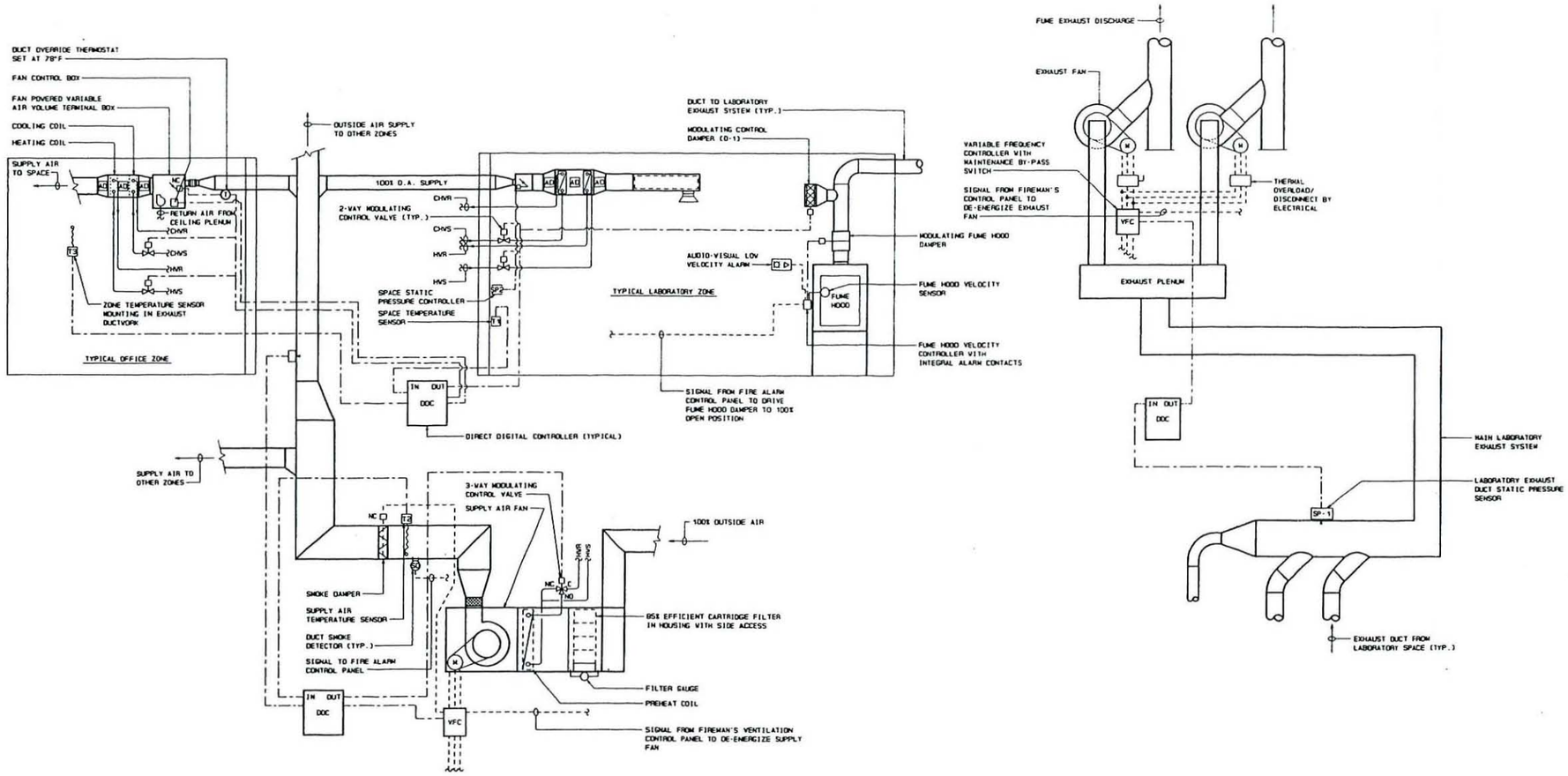

TYPICAL LABORATORY/OFFICE ZONE CONTROL DIAGRAM

NO SCALE

SEQUENCE OF OPERATION

GENERAL:

THE SUPPLY AIR FANS AND EXHAUST FANS ARE ENERGIZED MANUALLY AND SHALL OPERATE CONTINUOUSLY.

FUME HOOD CAPACITY CONTROL:

THE FUME HOOD VELOCITY CONTROLLER WITH ASSOCIATED VELOCITY SENSOR MOUNTED IN THE FUME HOOD SHALL MODULATE THE CONTROL DAMPER AT THE FUME HOOD DISCHARGE TO MAINTAIN THE DESIRED FUME HOOD FACE VELOCITY. LABORATORY EXHAUST FAN CAPACITY CONTROL WILL BE MAINTAINED BY A DIRECT DIGITAL CONTROLLER (DDC) WITH ASSOCIATED STATIC PRESSURE SENSORS (SP-1) IN THE EXHAUST DUCTWORK. A SEPARATE DUCT STATIC PRESSURE SENSOR WILL BE PROVIDED FOR THE LABORATORY EXHAUST SYSTEM. AS FUME HOOD DAMPERS MODULATE CLOSED THE DDC SHALL SENSE THE REDUCTION IN PRESSURE AND THROUGH THE VARIABLE FREQUENCY CONTROLLER REDUCE FAN SPEED TO MAINTAIN REQUIRED STATIC PRESSURE.

LABORATORY STATIC PRESSURE CONTROL:

SPARE STATIC PRESSURE CONTROLLER WITH INTEGRAL SENSOR MOUNTED BETWEEN THE LABORATORY SPACE AND ADJACENT CORRIDOR SHALL MODULATE THE SUPPLY AIR V.A.V. TERMINAL BOX TO MAINTAIN THE LABORATORY AT A NEGATIVE 0.03" STATIC PRESSURE WITH RESPECT TO THE CORRIDOR. SUPPLY FAN CAPACITY CONTROL WILL BE MAINTAINED BY THE DDC UTILIZING THE ASSOCIATED STATIC PRESSURE SENSOR IN THE SUPPLY AIR DUCTWORK. AS THE V.A.V. TERMINAL BOX DAMPERS MODULATE CLOSED THE DDC SHALL SENSE THE INCREASE IN PRESSURE AND THROUGH THE VARIABLE FREQUENCY CONTROLLER REDUCE FAN SPEED TO MAINTAIN REQUIRED STATIC PRESSURE.

LABORATORY COOLING:

DIRECT DIGITAL CONTROLLER (DDC) WITH ASSOCIATED SPACE TEMPERATURE SENSOR (T-1) SHALL MODULATE OPEN THE 2-WAY CONTROL VALVE AT THE ZONE COOLING COIL TO MAINTAIN THE SPACE AT THE DESIRED TEMPERATURE. WITH THE VALVE FULL OPEN, SHOULD INSUFFICIENT COOLING BE AVAILABLE BECAUSE OF LOW FUME HOOD AIR FLOW. THE DDC SHALL MODULATE OPEN CONTROL DAMPER (D-1) AS REQUIRED TO MAINTAIN DESIRED SPACE TEMPERATURE.

LABORATORY HEATING:

DIRECT DIGITAL CONTROLLER (DDC) WITH ASSOCIATED SPACE TEMPERATURE SENSOR (T-1) SHALL MODULATE OPEN THE 2-WAY CONTROL VALVE AT THE ZONE HEATING COIL TO MAINTAIN THE SPACE AT THE DESIRED TEMPERATURE. SUPPLY AIR TEMPERATURE SHALL BE MAINTAINED AT 60 DEGREES (F). BY A DDC WITH ASSOCIATED TEMPERATURE SENSOR (T-2) IN THE SUPPLY AIR DUCT (AVERAGING TYPE). THE DDC SHALL MODULATE THE 3-WAY CONTROL VALVE AT THE PREHEAT COIL AS REQUIRED.

OFFICE COOLING:

DIRECT DIGITAL CONTROLLER (DDC) WITH ASSOCIATED ZONE TEMPERATURE SENSOR MOUNTED IN THE EXHAUST DUCTWORK SHALL MODULATE OPEN THE CHILLED WATER 2-WAY CONTROL VALVE. VARIABLE AIR VOLUME DAMPER SHALL BE FULL OPEN. A DUCT MOUNTED TEMPERATURE OVERRIDE THERMOSTAT WILL BREAK THE CONTROL SIGNAL TO THE V.A.V. DAMPER WHEN THE TEMPERATURE EXCEEDS 78 DEGREES F, CAUSING THE DAMPER TO RETURN TO MINIMUM POSITION. AT THIS TIME THE DDC SHALL SEND A SIGNAL TO ENERGIZE THE V.A.V. TERMINAL FAN.

OFFICE HEATING:

DIRECT DIGITAL CONTROLLER (DDC) WITH ASSOCIATED SPACE TEMPERATURE SENSOR (T-1) SHALL MODULATE CLOSED THE VARIABLE AIR VOLUME DAMPER AS LESS COOLING IS REQUIRED. WHEN THE DAMPER IS AT MINIMUM POSITION. IF ADDITIONAL HEATING IS REQUIRED. THE DDC SHALL MODULATE OPEN THE HOT WATER 2-WAY CONTROL VALVE.

SAFETY:

THE FUME HOOD VELOCITY CONTROLLER SHALL BE EQUIPPED WITH AN AUDIO-VISUAL ALARM THAT SHALL BE ACTIVATED WHEN FUME HOOD FACE VELOCITY FALLS BELOW SET POINT. THE AUDIO PORTION OF THE ALARM SHALL BE PROVIDED WITH AN ALARM SILENCE SWITCH. THE SUPPLY FANS SHALL BE INTERLOCKED TO THE FIREMAN'S CONTROL PANEL AND SHALL BE OPERABLE FROM THAT REMOTE LOCATION. WHEN SMOKE IS SENSED WITHIN A LABORATORY ZONE THE FIRE ALARM PANEL SHALL ENERGIZE A CONTACT IN THE FUME HOOD VELOCITY CONTROLLER TO DRIVE THE FUME HOOD DAMPER TO THE 100% OPEN POSITION. A DUCT SMOKE DETECTOR IN THE SUPPLY AIR DUCTWORK SHALL BE CONNECTED TO THE FIRE ALARM CONTROL PANEL. A SMOKE DAMPER AT THE DISCHARGE OF THE SUPPLY FAN SHALL BE INTERLOCKED TO THE STARTER AND SHALL ONLY BE OPEN WHEN THE FAN IS OPERATING.

M-3

ALS BEAMLINES INITIATIVE

AIR FLOW & CONTROL DIAGRAM

LAWRENCE BERKELEY LABORATORY
UNIVERSITY OF CALIFORNIA

LIGHTING FIXTURE SCHEDULE

DESIG. / SYMBOL	DETAIL	DESCRIPTION
A A1	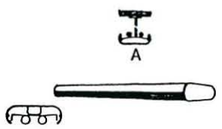	FLUORESCENT, 10"X3-5/8" ROUNDED, TWO LAMP, PENDANT-MOUNTED VERY WIDE SPREAD UP LIGHT FIXTURE WITH WHITE REFLECTOR AND PARTIAL PRISMATIC LENS PROVIDED WITH A ONE-PIECE EXTRUDED ALUMINUM HOUSING. REFLECTOR: DIE FORMED STEEL, WHITE ENAMEL FINISH. LAMP: TWO-40 WATT. BALLAST: ENERGY-SAVING, 430MA, RAPID START, THERMALLY PROTECTED, 277 VOLT. LENGTH: AS INDICATED MOUNTING: CABLE SUSPENSION WITH COILED CORD ELECTRIC SERVICE FEEDER. SEE ARCHITECTURAL DRAWING FOR MOUNTING HEIGHT. FINISH: SEE COLOR SCHEDULE MANUFACTURER: PEERLESS 10"x3 5/8" ROUNDED LO3 SERIES (NO KNOWN EQUAL). OPTION:
B	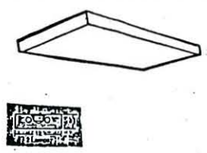	FLUORESCENT, SURFACE MOUNTED COMMERCIAL TYPE LIGHTING FIXTURE. CONSTRUCTION SHALL BE OF 20 GAGE, COLD ROLLED STEEL. ALL METAL PARTS SHALL BE FINISHED WITH A BAKED WHITE ENAMEL FOR HIGH REFLECTIVITY ON ALL LIGHT REFLECTING SURFACES. LAMP: 40 WATT. TWO LAMPS AS INDICATED. BALLAST: ENERGY-SAVING, 430MA, RAPID START, THERMALLY PROTECTED 277VOLT SIZE: NOMINAL 12 INCHES WIDE BY 4 FEET IN LENGTH. FINISH: HIGH-GLOSS BAKED WHITE ENAMEL. MANUFACTURER: COLUMBIA 8000 SERIES, DAYBRITE OR EQUAL.
C		FLUORESCENT TWO-LAMP, WALL-MOUNTED, VERY WIDE SPREAD UPLIGHT AND DOWNLIGHT FIXTURE CONSTRUCTED OF ONE-PIECE EXTRUDED ALUMINUM FORMING A 8-INCH BY 8-INCH CHANNEL TUBE AND WITH A SNAP-ON ACRYLIC PRISMATIC UPLIGHT LENS AND DOWNLIGHT BAFFLE. REFLECTOR: DIE-FORMED STEEL, WHITE ENAMEL FINISH. LAMPS: TWO-40 WATT. BALLAST: ENERGY-SAVING, 430MA, RAPID START, THERMALLY PROTECTED, 277 VOLT. LENGTH: AS INDICATED. FINISH: SEE COLOR SCHEDULE MANUFACTURER: PEERLESS SERIES, 8-INCH ROUND LO8 (NO KNOWN EQUAL).
D		FLUORESCENT, EXIT LIGHTING FIXTURE TWO-CIRCUIT TYPE WITH DOWN LIGHT AND DIRECTIONAL ARROWS WHERE REQUIRED TO SUIT THE INSTALLATION. FIXTURE SHALL INCLUDE COLD-ROLLED STEEL HOUSING, STENCIL FACE WITH 6 INCH GREEN LETTERS AND CLEAR ACRYLIC PRISMATIC DIFFUSER. LAMPS: TWO-SIX WATT T-5. BALLAST: TWO-SINGLE LAMP (SUITABLE FOR A MINIMUM STARTING TEMPERATURE OF -20°F), 277 VOLT TYPE AS APPLICABLE TO SUIT LAMP PROVIDED AUXILIARY: FLASHING/STROBE MODULE CONTROLLED BY THE FIRE ALARM SYSTEM. SEE DRAWING E31. SIZE: NOMINAL 12 INCHES WIDE BY 7 1/2 INCHES HIGH BY 3 INCHES DEEP FINISH: WHITE BAKED ENAMEL. MANUFACTURER: NCPHILBEN, PRESCOLITE OR EQUAL.
E	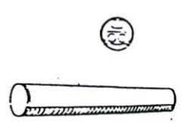	FLUORESCENT, 8-INCH ROUND, TWO LAMP, END-MOUNTED VERY WIDE SPREAD DOWNLIGHT FIXTURE WITH A SNAP-ON BAFFLE AND PROVIDED WITH A ONE-PIECE EXTRUDED ALUMINUM HOUSING. REFLECTOR: DIE FORMED STEEL, WHITE ENAMEL FINISH. LAMP: TWO-40 WATT. BALLAST: ENERGY-SAVING, 430MA, RAPID START, THERMALLY PROTECTED, 277 VOLT. LENGTH: AS INDICATED. MOUNTING: END PIECES TO ALLOW FIXTURE TO SPAN CORRIDOR WITH FEED FROM ONE END. SEE ARCHITECTURAL DRAWING FOR MOUNTING HEIGHT. FINISH: SEE COLOR SCHEDULE MANUFACTURER: PEERLESS 8-INCH ROUND LO8 SERIES (NO KNOWN EQUAL).
F	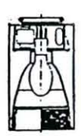	METAL-HALIDE, PENDANT-MOUNTED ARCHITECTURAL ROUND DOWNLIGHT FIXTURE WITH OPEN BAFFLE. FIXTURE SHALL HAVE A SEAMLESS ALUMINUM, 18 GAUGE HOUSING WITH A LAMP GUARD. REFLECTOR: ALZAK ALUMINUM, 16 GAUGE, SPECULAR CLEAR, WITH BLACK BAFFLE. LAMP: 175 WATT. BALLAST: TYPE WITH 90% OR HIGHER POWER FACTOR, 277 VOLT SIZE: NOMINAL 11 INCHES IN DIAMETER BY 18 INCHES HIGH. FINISH: TO BE SELECTED BY ARCHITECT. MANUFACTURER: LIGHTOLIER TYPE 32544-AO, LITHONIA GOTHAM CYLINDER SERIES, OR EQUAL.
G		FLUORESCENT, CEILING MOUNTED, ROUND DOWNLIGHT FIXTURE WITH AN OPAL GLASS DIFFUSER, SUITABLE FOR WET LOCATIONS. LAMP: T-9, 22 WATT CIRCULAR. BALLAST: ENCAPSULATED NORMAL POWER FACTOR, 277 VOLT. SIZE: NOMINAL 9 INCHES IN DIAMETER BY 6 INCHES DEEP. FINISH: SEE COLOR SCHEDULE. MOUNTING: FOR CEILING MOUNTING. MANUFACTURER: LITHONIA, CIRCLINES +10570, OR EQUAL

ELECTRICAL SYMBOLS

DIAGRAMS

- MOLDED CASE CIRCUIT BREAKER - THREE POLE UNLESS OTHERWISE INDICATED. XXX INDICATES AMPERE RATING TOP OR SINGLE NUMBER INDICATES TRIP SIZE. BOTTOM NUMBER INDICATES FRAME SIZE.
- POWER TRANSFORMER. TXX INDICATES TRANSFORMER NUMBER.
- GROUND CONNECTION

DESIGNATIONS

- MECHANICAL EQUIPMENT DESIGNATION
- LIGHTING FIXTURE DESIGNATION. LETTER INDICATES TYPE.

FLOOR PLANS

- 20 AMP, 125-VOLT, 1-POLE, 3-WIRE GROUNDED DUPLEX RECEPTACLE. MOUNT UP - 18" AFF, U.O.N.
- 20 AMP, 125-VOLT, 1-POLE, 3-WIRE GROUNDED DUPLEX RECEPTACLE. MOUNT UP - 44" AFF OR ABOVE COUNTER BACKSPLASH
- SINGLE-POLE TOGGLE SWITCH, 20A, 277V. MOUNT UP - 40" AFF, U.O.N.
- FLUORESCENT WALL DIMMER, 277V, MOUNT UP - 40" AFF, UON.
- THREE-WAY TOGGLE SWITCH, 20A, 277V. MOUNT UP - 40" AFF, U.O.N.
- SINGLE POLE "KEY" TOGGLE SWITCH, 20A, 277V, MOUNT UP 40" AFF, UON.
- EXIT LIGHT ON EMERGENCY POWER. PROVIDE ARROWS AS INDICATED ON DRAWINGS
- HID OR INCANDESCENT LUMINAIRE
- FLUORESCENT LUMINAIRE - 4 FT OR LONGER
- JUNCTION BOX. SIZE AND TYPE REQUIRED
- MOTOR OUTLET. SEE SINGLE LINE OR MECHANICAL EQUIPMENT LIST FOR SIZE
- J-BOX FOR ISOLATED GROUND CONNECTION
- MOTOR DISCONNECT SWITCH. SIZE & TYPE AS NOTED.
- MANUAL MOTOR STARTER WITH OVERLOAD
- 208Y/120 VOLT PANELBOARD
- 480Y/277 VOLT PANELBOARD
- TRANSFORMER
- TELEPHONE OUTLET
- MANUAL STATION
- ALARM BELLS
- ROOM TYPE SMOKE DETECTOR. BOX & WIRING ONLY. NO DETECTOR
- WALL MOUNTED SPEAKER OUTLET. NO SPEAKER

ABBREVIATIONS

AFF	ABOVE FINISHED FLOOR
UON	UNLESS OTHERWISE NOTED
GFI	GROUND FAULT INTERRUPTER

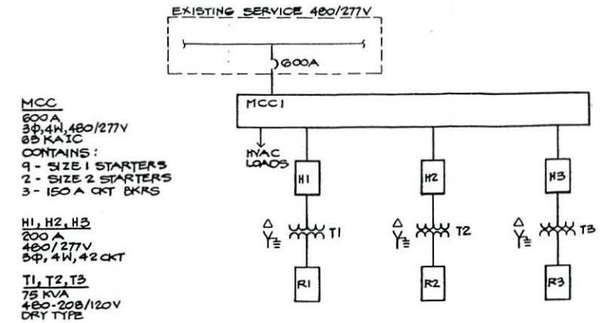

MCC
600A
3Φ,4W,480/277V
85 KA IC
CONTAINS:
9 - SIZE 1 STARTERS
2 - SIZE 2 STARTERS
3 - 150 A CKT BKRS

H1, H2, H3
200 A
480/277V
3Φ, 4W, 42 CKT

T1, T2, T3
75 KVA
480-208/120V
DRY TYPE

R1, R2, R3
225A
208/120V
3Φ,4W,42 CKT

SINGLE LINE DIAGRAM
NO SCALE

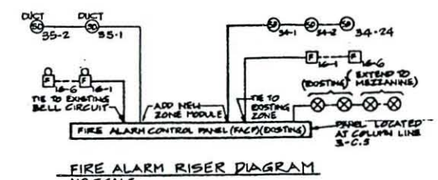

FIRE ALARM RISER DIAGRAM
NO SCALE

E-1

ALS BEAMLINES INITIATIVE

FIXTURE SCHEDULE, SYMBOLS, ONE-LINE AND RISER DIAGRAMS

LAWRENCE BERKELEY LABORATORY
UNIVERSITY OF CALIFORNIA

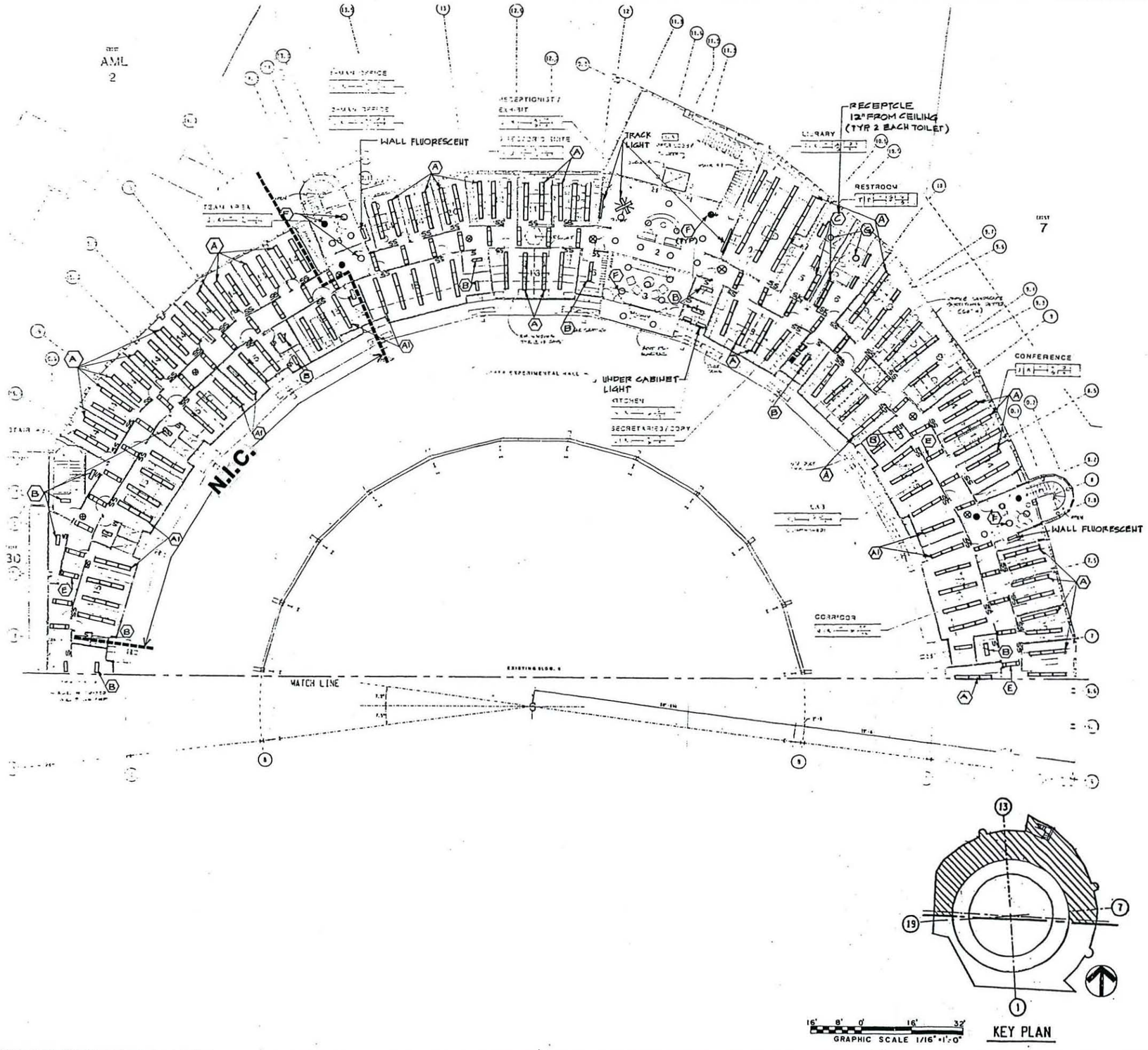

E-2

ALS BEAMLINES INITIATIVE

LIGHTING PLAN - NORTH

LAWRENCE BERKELEY LABORATORY
UNIVERSITY OF CALIFORNIA

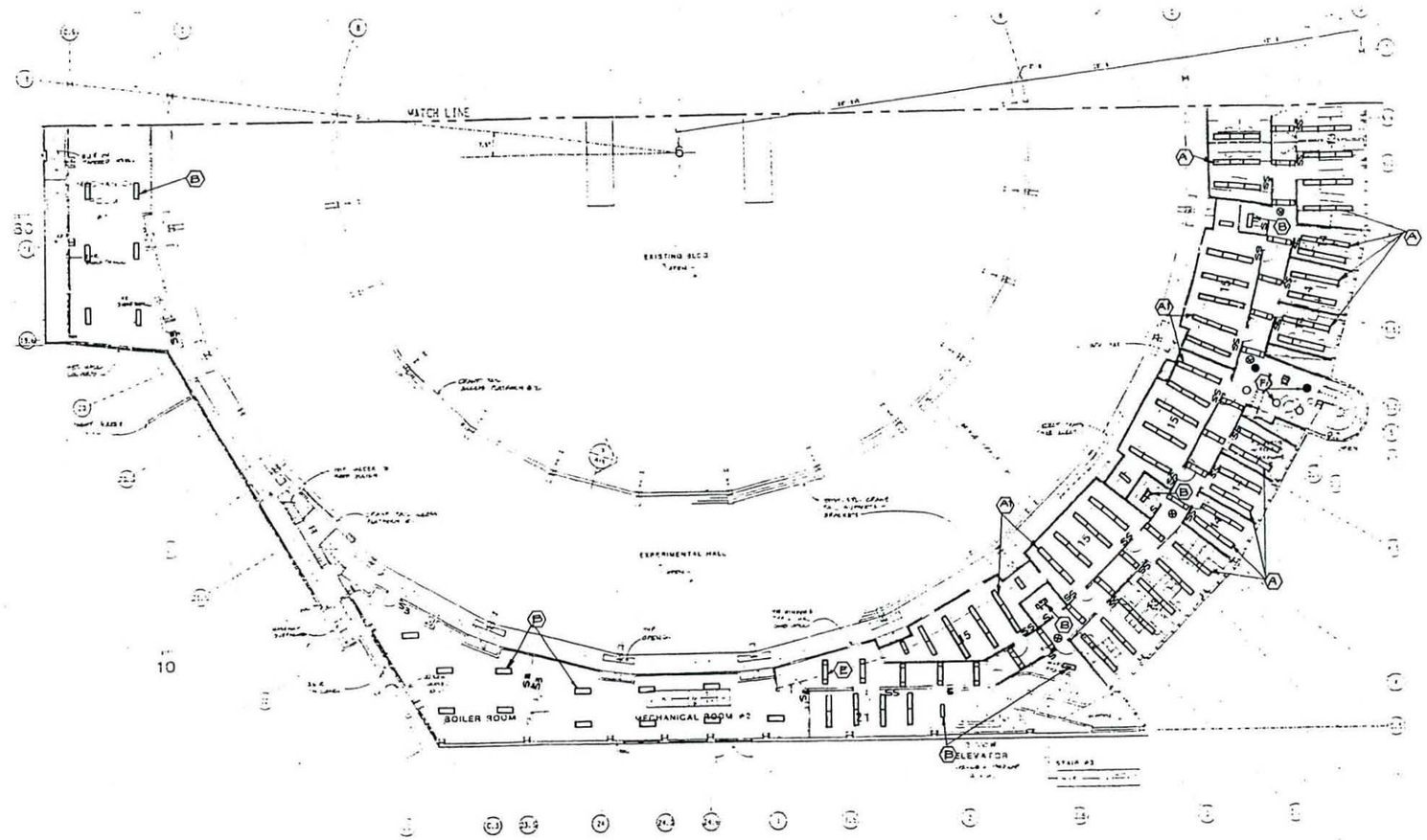

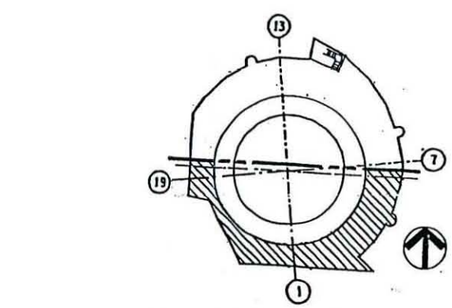

GRAPHIC SCALE 1/16"=1'-0"

KEY PLAN

E-3

ALS BEAMLINES INITIATIVE

LIGHTING PLAN - SOUTH

LAWRENCE BERKELEY LABORATORY
UNIVERSITY OF CALIFORNIA

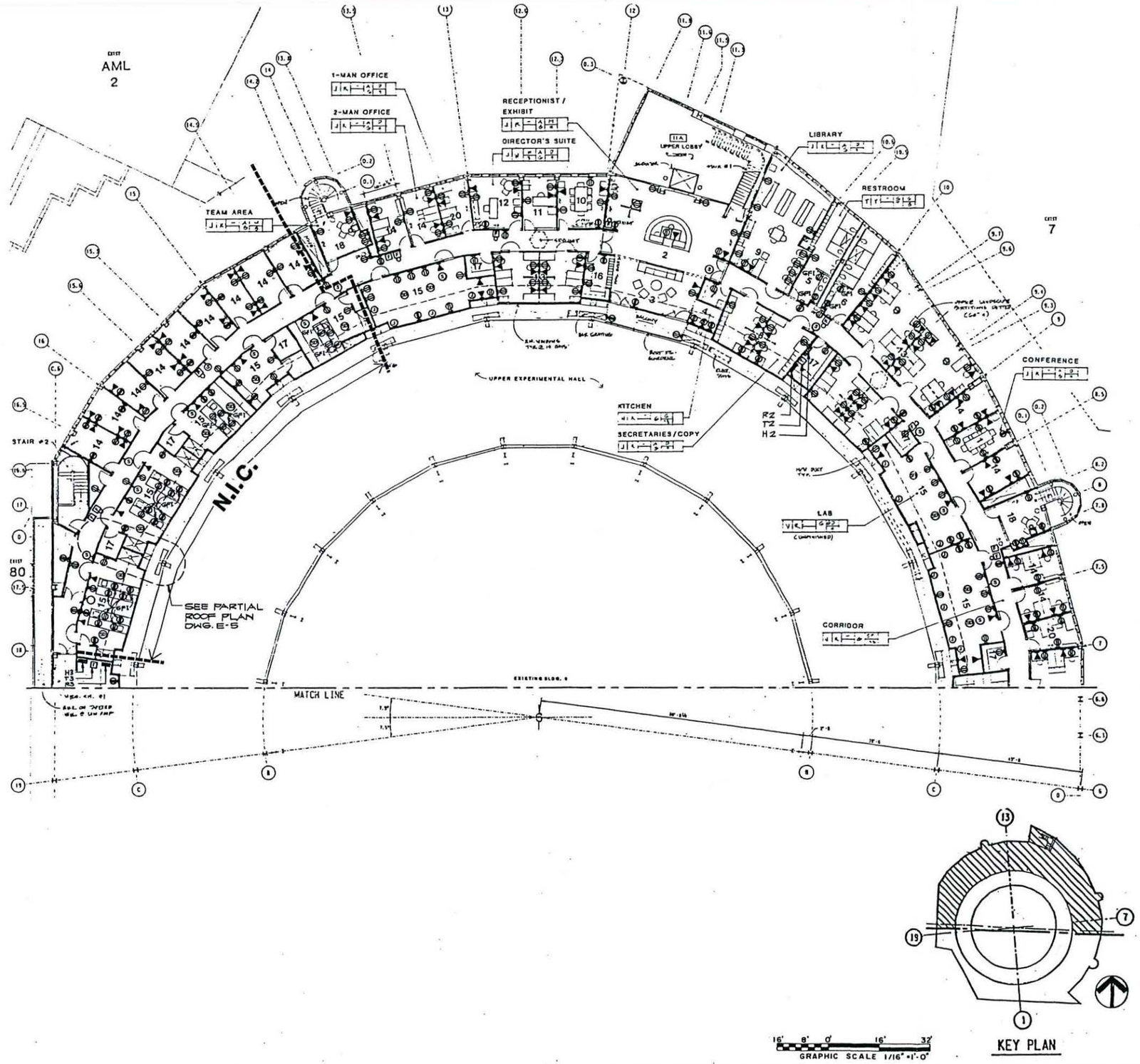

E-4

ALS BEAMLINES INITIATIVE

POWER, TELEPHONE, AND SIGNAL SYSTEMS
PLAN - NORTH

LAWRENCE BERKELEY LABORATORY
UNIVERSITY OF CALIFORNIA

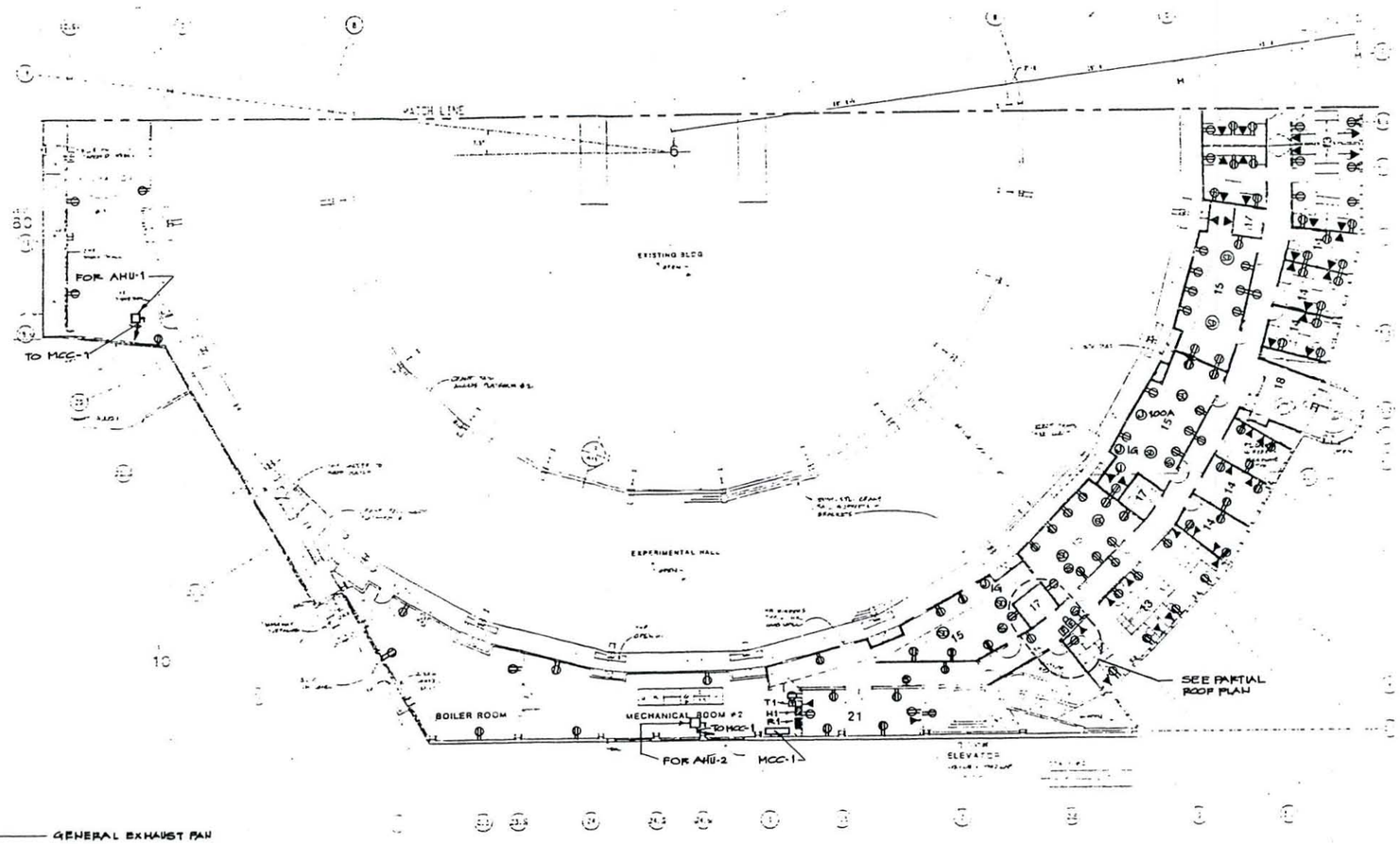

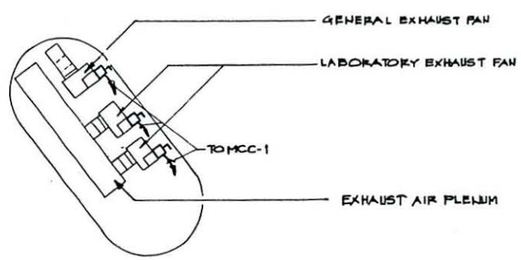

PARTIAL ROOF PLAN AT EXHAUST FAN ENCLOSURE(TYP OF 3)

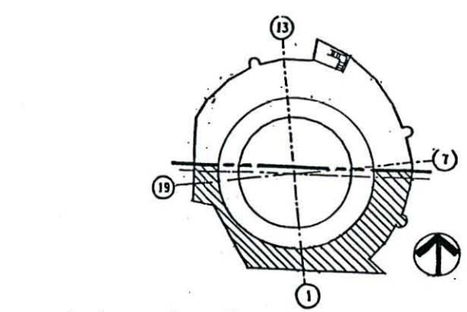

GRAPHIC SCALE 1/16"=1'-0"

KEY PLAN

E-5

ALS BEAMLINES INITIATIVE

POWER, TELEPHONE, AND SIGNAL SYSTEMS
PLAN - SOUTH

LAWRENCE BERKELEY LABORATORY
UNIVERSITY OF CALIFORNIA

ALS BEAMLINES INITIATIVE

SECTION 6

OUTLINE SPECIFICATIONS

Division 0	NOT APPLICABLE	
Division 1	GENERAL REQUIREMENTS	
	01060	Regulatory Requirements
	01200	Project Meetings
	01300	Submittals
	01400	Quality Control
	01530	Barriers
Division 2	NOT APPLICABLE	
Division 3	CONCRETE	
	03100	Concrete Formwork
	03200	Concrete Reinforcement
	03300	Cast-In-Place Concrete
Division 4	NOT APPLICABLE	
Division 5	METALS	
	05340	Metal Panels
	05500	Metal Fabrications
Division 6	WOOD AND PLASTIC	
	06200	Carpentry
	06400	Cabinet Work
Division 7	THERMAL AND MOISTURE PROTECTION	
	07253	Sprayed-On Fireproofing
	07260	Firestopping
	07500	Single Ply Roofing Repair
	07600	Flashing and Sheetmetal
	07900	Sealants

Division 8	DOORS AND WINDOWS	
	08100	Hollow Metal Doors and Frames
	08210	Wood Doors
	08510	Steel Windows
	08710	Finish Hardware
	08800	Glazing
Division 9	FINISHES	
	09250	Gypsum Board Wall and Ceiling Systems
	09300	Ceramic Tile
	09510	Acoustical Treatment
	09650	Resilient Flooring
	09685	Carpet
	09900	Painting
Division 10	SPECIALTIES	
	10100	Marker Boards and Tack Boards
	10160	Toilet Partitions
	10400	Identifying Devices
	10500	Lockers
	10600	Modular Workstations
	10800	Toilet Room Accessories
	10950	Miscellaneous Specialties
Division 11	EQUIPMENT	
	11130	Projection Screen
	11650	Laboratory Furniture
Division 12	FURNISHINGS	
	12500	Window Treatment
Division 13	SPECIAL CONSTRUCTION	
	13810	Energy Monitoring and Control System - New Construction
Division 14	CONVEYING SYSTEMS	
	14200	Hydraulic Elevators

Division 15	MECHANICAL	
	15010	General Provisions
	15050	Basic Materials and Methods
	15300	Fire Protection
	15400	Plumbing
	15500	Heating, Ventilating, and Air Conditioning Equipment
	15950	Controls
	15990	Air and Water Balancing
Division 16	ELECTRICAL	
	16010	General Provisions
	16050	Basic Materials and Methods
	16400	Service and Distribution System
	16481	Variable Frequency Drives
	16500	Lighting
	16700	Communications System
	16721	Fire Alarm System
	16915	Lighting Control System
	16950	Acceptance Testing

DIVISION 1 - GENERAL REQUIREMENTS

SECTION 01060: REGULATORY REQUIREMENTS

A. Codes and Design Standards

1. Codes listed in Section 2 of this Conceptual Design Report should be included in the construction specifications; codes shall be latest editions except where specifically noted otherwise.

2. Design Standards

   a. Structural Steel

      1) AISC Standard Specifications for the Design, Fabrication, and Erection of Structural Steel for Buildings.

      2) AISC Code of Standard Practice for Steel Buildings and Bridges.

      3) AWS Structural Welding Code D1.1.

      4) AISC Specification for Structural Joints Using ASTM A325 or A490 Bolts.

      5) ASTM Standards.

      6) SSPC Steel Structures Painting Council.

   b. Metal Decking

      1) Steel Deck Institute - SDI Standard #1.

      2) AISI Specification for the Design of Light Gauge, Cold Formed, Steel Structural Members.

      3) American Welding Society Standards.

SECTION 01200: PROJECT MEETINGS

A. Preconstruction conference.

B. Billing meetings, at the last progress meeting each month.

C. Periodic progress meetings, twice each month.

D. Guarantees, bonds, and service and maintenance contracts meetings.

SECTION 01300: SUBMITTALS

A. Schedules

1. Progress schedule.

2. Proposed cash-flow schedule.

3. Schedule of values.

4. Submittal schedule.

B. Products list.

C. Shop drawings, product data, and samples.

D. Certificates of compliance.

SECTION 01400: QUALITY CONTROL

A. Testing laboratory's services.

B. Testing agency's services.

SECTION 01530: BARRIERS

A. Tree and plant protection.

B. Barricades.

DIVISION 3 - CONCRETE

SECTION 03100: CONCRETE FORMWORK

PART 2 PRODUCTS

2.01 MATERIALS

A. Form Lumber: Douglas fir, construction grade.

B. Plywood Forms: Douglas fir plywood, Grade B-B, Class 1, exterior type, 5/8 inch thick maximum.

C. Form Sealer: Nonbonding and nonstaining.

D. Form Accessories: Standard types, as required.

SECTION 03200: CONCRETE REINFORCEMENT

PART 2 PRODUCTS

2.01 MATERIALS

A. Reinforcing Steel: ASTM A615, Grade 40 for No. 4 bars and smaller, Grade 60 for No. 5 bars and larger.

B. Welded-Wire Fabric: ASTM A185 or ASTM A497.

C. Tie Wire: No. 16 AWG or heavier, black annealed.

D. Spirals: ASTM A82.

SECTION 03300: CAST-IN-PLACE CONCRETE

PART 2 PRODUCTS

2.01 MATERIALS

A. Portland Cement Concrete

1. Compressive Strength, 28-day minimum

   a) All concrete: 4,000 psi.

2. Portland Cement: ASTM C150, Type II.

3. Aggregates: ASTM C33. Coarse aggregates shall be either granite or limestone.

4. Water: Clean and potable.

5. Admixtures: ASTM C494 or C290, as approved.

B. Concrete Curing

1. Liquid Membrane-Forming Compound: ASTM C309, Type I.

2. Sheet Materials: ASTM C171.

3. Clean, nonstaining burlap.

C. Patching Mortar: Concrete materials, except with coarse aggregate omitted.

D. Grout

1. Regular: Concrete materials, except with coarse aggregate omitted.

2. Metallic Nonshrink: "Embeco 153," manufactured by Master Builders, or approved equal.

DIVISION 5 - METALS

SECTION 05340: METAL PANELS

A. Metal panels at new roof exhaust fan enclosures: Non-load-bearing, factory-fabricated panels, profiled and finished to match Advanced Light Source panels.

B. Finish: 70% PVF2 thermosetting fluorocarbon over one coat of acrylic primer; PPG, Glidden, or equal.

C. Trim pieces: 22-gauge, finish matching panels.

D. Fasteners: Exposed fasteners shall have neoprene washers and finish matching wall panels.

SECTION 05500: METAL FABRICATIONS

A. All miscellaneous metal and metal fabrications (10-gauge or heavier)

1. Custom steel stairs, combination spiral and straight sections.
2. Interior guardrails and handrails.
3. Elevator sill plates.
4. Miscellaneous rough hardware.

DIVISION 6 - WOOD AND PLASTICS

SECTION 06200: CARPENTRY

A. Lumber: Douglas fir, construction grade, WCLIP No. 16, S4S; exterior nailers to be pressure-treated.

B. Fire retardant: Clean, odorless, paintable, non-corrosive pressure process using mineral salts; use on all lumber and plywood.

C. Rough Hardware: Types, strengths, materials, and sizes suitable for the intended purposes; galvanized, cadmium-plated, or non-corrosive metal for exterior use.

D. Wood Shelving at Janitor's Room: 1" Douglas fir, S4S.

E. Installation of interior doors, hardware, and miscellaneous specialties.

SECTION 06400: CABINETWORK

A. Custom Casework (toilet room counters and team area cabinets): Laminated-plastic types; WIC "Custom" grade.

B. Exposed Hardware: Polished chrome.

C. Plastic Laminate: See ALS COLOR SCHEDULE.

DIVISION 7 - THERMAL AND MOISTURE PROTECTION

SECTION 07253: SPRAYED-ON FIREPROOFING

A. Repair of sprayed-on mineral-fiber fireproofing damaged during this work: Applied directly to steel framing; 1-hour fire rating per ASTM E 119; no asbestos; Grace "Monokote," Albi "Duraspray," Pyrocrete, or equal.

SECTION 07260: FIRESTOPPING

A. Safing insulation: FS HH-I-521, Type I.

B. Fire-rated foam: DOW CORNING #3-6548, G.E. "RTV 850," or approved equal.

C. Fire-rated sealant and putty: UL listed systems.

D. Application: Seal penetrations in time-rated assemblies, including flutes of metal decks above rated wall partitions.

SECTION 07500: SINGLE PLY ROOFING REPAIR

A. Repair of single ply EPDM roofing over tapered insulation at supports for new roof exhaust fan enclosures.

B. Single ply roofing: Non-reinforced EPDM sheets, 0.06 inches thick sheets plus related flashing, adhesive, splicing cement, lap sealant, and prefabricated pipe seals; match Building 6 roofing system.

C. Walk-way surfacing: Precast concrete pavers, two-feet (2') square, weighing 10lbs/sf minimum.

SECTION 07600: FLASHING AND SHEETMETAL

A. Flashing : 22-gauge sheet steel, galvanized in conformance with ASTM A 361, G90 coating designation. Note: Flashing at metal wall panels to have baked fluoropolymer coating.

B. Fasteners: Types, strengths, and sizes suitable for the intended purposes, galvanized or of non-corrosive materials compatible with flashing material.

C. Solder: ASTM C 32. Alloy Grade 50A.

D. Flux: FS O-F-506.

SECTION 07920: SEALANTS

A. General Exterior Building Sealing: Two-component gun-grade non-sag rubber-based elastomeric; FS TT-S-00227E, Type II, Class A.

B. General Interior Building Sealing: Single-component gun-grade paintable acrylic-latex water-based; WOODMONT "Chem-Calk 600" or equal.

C. Acoustical Sealing: Permanently plastic non-skinning paintable synthetic-polymer-based; PRESSTITE "No. 579.64 Acoustical Sealant" or equal.

D. Sanitary Sealing: FS TT-S-001543A, Class A single-component primerless flexible mildew-resistant silicone rubber; DOW CORNING "Dow Corning Silicone Rubber Bathtub Caulk," Catalog No. 8640, or equal.

E. Sealant Backup: Compatible with sealant material.

DIVISION 8 - DOORS AND WINDOWS

SECTION 08100: HOLLOW METAL DOORS AND FRAMES

A. Doors

1. Steel: Commercial-quality cold-rolled sheet steel, heavy-duty seamless flush-panel doors complying with SDI 100; UL labels as scheduled for fire-rated openings (laboratories 1-hour). Interior Doors: 18-gauge minimum.

2. Insulation, Sound and Thermal: Chemically inert, non-combustible, and moisture-resistant.

B. Frames

1. Steel: Cold- or hot-rolled sheet steel, 16-gauge.

2. Finish: Manufacturer's standard baked-on rust-inhibitive primer.

C. Installation is specified in Section 06200, Carpentry.

SECTION 08210: WOOD DOORS

A. Solid core wood doors, stain-grade ash face veneers, UL labels where scheduled (1/3-hour); metal stops at glazed openings; typical at offices.

B. Installation is specified in Section 06200, Carpentry.

SECTION 08510: STEEL WINDOWS

A. Heavy intermediate steel windows per SWI Specifications; design to match ALS interior windows.

B. Factory finish: Baked polyvinyl-chloride over PVC primer.

SECTION 08710: FINISH HARDWARE

A. Doors: Butts, locksets, latchsets, overhead closers, panic hardware, smoke seals and gaskets, and thresholds, UL-rated hardware where scheduled; sound seals at mechanical rooms; polished chrome and stainless steel.

Lockset cores shall not be removable; Schlage heavy duty "D" series lever handle type.

B. Installation: Specified in Section 06200, Carpentry.

SECTION 08800: GLAZING

A. Wire Glass, typical at interior windows and doors: 1/4-inch, clear, one-inch (1") diamond mesh.

B. Fire-rated glass wall at Lobby openings (including exit door at Stair #1): 1-hour fire wall system, O'Keefe's "Glassprotex," Eich "Wallsystem," or equal.

C. Mirrors at toilet rooms: 1/4-inch, thick, FS DD-G-451, Type 1. Framed mirrors are specified in Section 10800, Toilet Room Accessories.

D. Glazing compounds and accessories: Conform to FGMA glazing manual.

DIVISION 9 - FINISHES

SECTION 09250: GYPSUM BOARD WALL AND CEILING SYSTEMS

A. Non-Load-Bearing Interior Wall-Framing Systems

1. Metal studs and furring channels, galvanized painted with a rust-inhibitive primer.

2. Metal Backing-Plates: Galvanized, or painted with a rust-inhibitive primer.

B. Ceiling Suspension System: Standard-type concealed metal suspension system suitable for the application of gypsum wallboard; major components shall be galvanized or painted with a rust-inhibitive primer.

C. ASTM C36 standard and Type X fire-rated gypsum wallboard, 5/8-inch thick, with tapered edges.

D. Gypsum shaft-wall system were application from one side is required, C and H type metal studs, gypsum panels for 1-hour fire-rated assembly.

E. Accessories: Fasteners and joint-treatment materials of standard manufacture.

SECTION 09300: CERAMIC TILE

A. Floor Tile: TCA A137.1 standard-grade 8" x 8" x 5/16", skid-resistant finish, same color glazed as wall tile.

B. Wall Tile: Cushion-edge with satin glaze, 8" x 8" x 5/16" and 1" feature strips, special-purpose tile. See ALS COLOR SCHEDULE.

SECTION 09510: ACOUSTICAL TREATMENT

A. Plenum mask at team areas and reception area: Semi-circular shaped aluminum units 5-inch diameter, fixed to carriers to produce a linear pattern approximately 8-inches on center, baked-enamel finish (see COLOR ALS SCHEDULE); match ALS system. Acoustic board above plenum mask: 1" thick fiberglass with black NFPA coating, fixed to ceiling with metal spindles and washers.

B. Acoustic Wall Panels at offices and conference areas: Tackable fiberglass core, woven-fabric, DECOUSTICS "Series 800," GUILFORD OF MAINE "FR-701," ARMSTRONG "Soundsoak Encore," or equal.

C. Acoustic Baffles at corridor: Woven fabric covering over acoustic fiberglass core, 2" thick by 12" high with radius edges, aluminum frame; MPC Inc., Sound Reduction Corp., or equal.

D. Acoustic Board at mechanical room walls and ceilings: 2.25 pfc density, 3" thick, white vinyl facing, applied with stick clips and washers; O.C.F. "Stonebrook," or equal.

SECTION 09650: RESILIENT FLOORING

A. Vinyl Tile: 12"x 12" 1/8"-with 1" thick feature strips; VPI or equal.

B. Sheet Vinyl: Acid resistant, heat welded seams; Congoleum "Flor-Ever" or equal.

C. Resilient Base at gypsum board walls: Vinyl, 2-1/2" high topset; Armstrong, Burke, or equal.

SECTION 09685: CARPET

A. Carpet: 30 oz. nylon, patterned loop, 66.7 oz.; Lotus "City Lights," Lees' "Fountainhead II," or equal.

B. Adhesive: As recommended by manufacturer for concrete subfloor.

SECTION 09900: PAINTING

A. Paint all exterior and interior exposed surfaces as scheduled.

B. Paint Materials: Fuller-O'Brien, Pratt & Lambert Co., or equal. Incombustible paint on structural members shall be compatible with existing sprayed fireproofing.

C. Exterior finish: Gloss.

D. Interior finish: Flat, semi-gloss (eggshell at fireproofing).

DIVISION 10 - SPECIALTIES

SECTION 10100: MARKER BOARD AND TACK BOARDS

A. Marker boards: Porcelain on steel with radius edges and marker tray; Greensteel, Claridge, or equal.

B. Tack boards: Woven polyester fabric on tackable core and aluminum frame; Greensteel, Claridge, or equal.

SECTION 10160: TOILET PARTITIONS

A. Materials

1. Sheet Steel: Hot-rolled, stretcher-leveled, bonderized.

2. Hardware, Fittings, Fasteners, and Accessories: Stainless steel and chrome-plated non-ferrous castings.

3. Finish: Manufacturer's standard baked enamel at partitions; #4 stainless steel doors.

B. Support

1. Toilet Partitions: Floor supported, overhead braced.

2. Urinal Screens: Wall-hung.

C. Shower Compartments: Terrazzo shower pan, phenolic resin enclosures, shower head and controls (connection in Division 15), grab bars, shower seat, handicap accessible; dressing compartment to match toilet partitions.

SECTION 10400: IDENTIFYING DEVICES

A. Material: Matte-finish acrylic with 3/8-inch radius edges, mounted with self-adhesive tape, engraved per ANSI and ADA standards.

B. Types

1. Interior Door Signs: 6" x 6" room number in upper-right hand corner; provide clear windows for changeable labels at offices and laboratory doors.

2. Toilet Room Signs: 13-inches, with international handicapped symbol and in incised letters, the word "MEN" or the word "WOMEN."

3. Directional Signs: 6" x 12" with letters 2-1/2" high, indicating inclusive room numbers.

4. Floor-Plan Plaques (FP): 24" x 24", with diagrammatic floor plan, key room numbers, and exits identified on one plaque and a second, adjacent plaque with eleven reassignable 1-1/2" high label modules to identify research groups and section leaders.

5. Building Directory Board (D): 18" x 24" hinged glass door with grooved felt backboard to receive plastic letters; letters and numbers to identify research groups and section leaders (three).

6. NO SMOKING signs: 8" square with international "No Smoking" symbol and words (five).

SECTION 10500: LOCKERS

A. Lockers at toilet rooms: Recessed, double tier, 72" overall height, 15" deep by 12" wide; Lyon, Republic, Trask & Squier, or equal.

B. Construction shall be steel, 16-gauge doors and frame, 24-gauge body; baked enamel finish; chrome handles and padlock hasp (locks N.I.C.).

SECTION 10600: MODULAR WORKSTATIONS

A. Panels shall be capable of supporting a variety of work surfaces, drawer systems, shelving, file units, tackboards, panel-mounted ambient light fixtures, task lights and various accessories. Panels shall be constructed of steel frames, hardboard substrate and surfaced with a fabric covering or a plastic laminate finish. Panels shall be nominally two-inch (2") thick and have a vertical dimension of 66-inch.

Power and communications cables shall be supplied to the panels through a base raceway.

SECTION 10800: TOILET ROOM ACCESSORIES

A. Toilet Room Accessories: Stainless steel with satin finish; Bradley, Bobrick, Accessory Specialties, or equal. Soap dispensers to be Sani-fresh liquid cartridge type.

B. Items Toilet seat cover dispensers, feminine napkin dispensers/disposals/ vendor, waste receptacles, towel dispensers, toilet paper holders, grab bars, soap dispensers, framed mirrors and hair dryers for shower compartments.

SECTION 10950: MISCELLANEOUS SPECIALTIES

A. Fire Extinguisher Cabinets (FEC): Recessed 25" x 10-1/2" x 4" deep view door with curved projection (extinguishers to be LBL standard).

B. Mop Strip: 24-inches long, 3 cam holders (four).

C. Corner guards: Extruded impact-resistant plastic in surface-mounted extruded aluminum frames.

D. Microwave ovens: Subcompact type (three required).

E. Refrigerators: Compact type designed for recessed installation (three required).

F. Door hooks: Chrome coat hooks for all office doors.

G. Installation is specified in Section 06200, Carpentry.

DIVISION 11 - EQUIPMENT

SECTION 11130: PROJECTION SCREEN

A. Projection screen at conference rooms: recessed, electric "Board Room" type, 10' wide by 6' high; DA-lite, Draper, or equal.

SECTION 11650: LABORATORY FURNITURE

A. Laboratory Furniture

1. Fume hoods.
2. Metal base and wall cabinets.
3. Manufacturers: HAMILTON, PERMALAB, or equal.

DIVISION 12 - FURNISHINGS

SECTION 12500: WINDOW TREATMENT

A. Horizontal Blinds at all exterior windows: one-inch wide aluminum mini-blinds; Levelor Lorentzen "Rivera," Bali "MiniClassics," or equal.

DIVISION 13 - SPECIAL CONSTRUCTION

SECTION 13810: ENERGY MONITORING AND CONTROL SYSTEM - NEW CONSTRUCTION

PART 1 GENERAL

1.01 WORK INCLUDED: FURNISH AND INSTALL

A. Building Automation System.

B. Software.

C. Fume Hood Control Systems.

1.02 SYSTEM DESCRIPTION

A. The purpose of the project is control the "on/off" operation of specific lighting and air conditioning systems and to monitor the space temperature in selected rooms. The means of accomplishing this is through the installation of a fully distributed processing Building Automation System (BAS) with both supervisory control and Direct Digital Control (DDC) capabilities for automation of building energy-using systems, including heating, ventilation, air conditioning, and individual room lighting "occupancy sensors" to control the operation of the lighting. The sensors are interconnected to the digital inputs and outputs of the Energy Monitoring Control System (EMCS) to monitor and control the on/off operation of the HVAC units based on room occupancy.

B. The BAS shall be a fully independent programmable control system with full energy monitoring control and data acquisition capabilities, and remote communications capability for remote programming, monitoring, manual over-ride, remote alarm indication and logging, and automatic collection and processing of historical data.

C. Fume Hood Control Systems

1. Subcontractor shall furnish and install fume hood control systems.

PART 2 PRODUCTS

2.01 EMCS MANUFACTURER

A. Barrington Systems StarView™ 4000, to match existing, provided by the Subcontractor and installed by the Subcontractor. The University has purchased a 'site-wide' license for Barrington Systems StarVIEW 4000™ software.

2.02 FUME HOOD CONTROL SYSTEMS

A. The fume hood control systems shall include a face velocity sensors and controllers.

PART 3 EXECUTION

3.01 EMCS INSTALLATION

A. The Subcontractor shall install one or more field processing units (FPUs) and any required input/output interface devices, all in appropriate enclosures. Subcontractor shall provide and install all appropriate appurtenances, devices and terminate wiring from the input/output subsystem and shall perform a comprehensive acceptance inspection and test, and prove connection and function for all input/output subsystem components. The EMCS subcontractor shall develop, install, test, tune and prove, and thoroughly document all applications programs.

3.02 EMCS FIELD SERVICES

A. Perform a comprehensive acceptance inspection and test of all installation details and system operational validity, including but not limited to inspection and verification of input/out sensor locations, control device location and connection, input/output point terminations, point-by-point proof of function for each input/output, and functional test of all application software.

SECTION 14200: HYDRAULIC ELEVATORS

A. Service Elevator: Combination passenger/service hydraulic elevator, two-stop, 8 feet by 8 feet platform with 5 feet by 7 feet high center-opening doors, 7,000# capacity.

1. Cab finishes: #4 stainless steel door frame and control panel, base, handrail, and interior door surfaces,; plastic laminate side and ceiling panels.

2. Controls: Fireman keyed access; ANSI and ADA disability standards.

3. Guide rail supports: Provide vertical steel framing members and connections as required to support guide rails.

4. Elevator pump room will be located at the second floor level.

B. Lobby Elevator: Passenger hydraulic elevator, two-stop, 7 feet by 5 feet platform with glass observation window facing lobby; 2,500# capacity. Note: Pit, cylinder, and connections to hydraulic pump room were provided under Building 6 Subcontract.

1. Cab finishes and controls similar to above.

2. Provide round steel tube supports for guide rails.

3. Provide tempered glass enclosure at lobby pit plus shroud for underside of cab.

4. Provide hydraulic and electric lines to remote pump room.

DIVISION 15 - MECHANICAL

SECTION 15010: GENERAL PROVISIONS

A. Scope: All mechanical materials and installations in strict accordance with the following codes:

1. Uniform Mechanical Code 1991
2. Uniform Plumbing Code 1991
3. Uniform Building Code 1991
4. NFPA 13-1992
5. NFPA 72-1992

SECTION 15050: BASIC MATERIALS AND METHODS

A. Scope: Specifies pipe, fittings, valves, specialities, supports, anchors, mechanical identifications, and insulation.

B. Materials

1. Piping

a. Domestic and Industrial, Hot and Cold Water Piping: Type L hard drawn copper with soldered fittings; as per ASTM B-78, B 585-74.

b. Chilled and Hot Water Piping: Black steel pipe with welded or threaded connections, or copper with soldered fittings.

c. Fire Sprinkler Piping: Black steel pipe with threaded or grooved connections.

d. Domestic Waste Piping: Cast iron service weight piping with bell-and spigot joints for below grade. Indoors above grade use cast-iron service weight piping with bell-and-spigot or hubless joints for 2-1/2-inch and larger, galvanized steel pipe with cast-iron drainage fittings for two-inch pipe and smaller.

e. Vent Piping: Two-inch and smaller, galvanized steel or DHV copper tubing; three-inch and larger, cast iron with hubless joints.

f. Laboratory Waste and Vent: Polypropylene pipe and fittings with fusion type connections.

g. Pipe Escutcheons: Sheet steel, solid or split hinged; chrome for finished occupied areas, prime painted at unoccupied areas.

2. Mechanical Insulation

a. Insulate all domestic and industrial hot water piping with one-inch-thick, pre-molded, high-density fiberglass with an all service jacket (ASJ).

b. Insulate hot water and chilled water with pre-molded, high-density fiberglass with an ASJ. Thickness to be established based on temperature differences expected.

c. All air conditioning supply air ductwork downstream of heating and cooling coils to be lined with internal thermal insulation.

C. Execution

Mechanical Identification: All valves, pipe, ducting, and equipment in the ceiling space to be tagged and marked for identification purposes.

SECTION 15300: FIRE PROTECTION

A. Scope: Ordinary Hazard Group II wet pipe sprinkler system throughout the second floor space. The Existing fire sprinkler system on the second floor will be modified to suite the revised wall layout.

B. Materials

1. Piping: Schedule 40 steel with 175-pound banded cast-iron threaded, or 250-pound flanged fittings, or grooved-end, flexible couplings.

2. Valves: UL listed and F.M. approved butterfly valves.

3. Sprinklers: Pendant, upright, or sidewall type.

SECTION 15400: PLUMBING

A. Fixtures

1. Electric Water Coolers: Handicapped accessible.

2. Hose Bibs: Locate in each toilet room.

3. Water Closets: Wall hung, elongated bowl with chair carrier support, flush valve.

4. Urinals: Wall hung with chair carrier supports, flush valve.

5. Lavatories: Counter type.

6. Counter Sink: Stainless steel.

7. Service Sink: Wall hung, trap standard.

B. Soil and Waste: Rough-in for toilet facilities.

C. Floor Drains: Heavy duty cast iron.

D. Acid Waste Neutralization System: The system shall be complete in all respects with products matched and assembled into a complete system. Components shall include: neutralization tanks, tank mixers, neutralizing agent, PH controller and accessories, as well as associated interconnection piping.

E. Laboratory Waste Lift Pumps: Individual waste lift pumps with integral receiving sump. Units will be mounted under laboratory counters to pump laboratory waste to the acid neutralization system.

SECTION 15500: HEATING, VENTILATING, AND AIR CONDITIONING EQUIPMENT

A. Low Pressure Ductwork: All supply and general exhaust ductwork shall be galvanized steel constructed in conformance with ASHRAE and SMACNA standards.

B. Laboratory Ductwork: Coated, galvanized steel constructed with welded joints and flanged-gasketed connections.

C. Power Ventilators: V-belt drive, roof-mounted centrifugal exhauster. Motors with vibration isolation. Low sound levels in accordance with AMCA standard 300-67 testing methods.

D. Variable Air Volume Terminal Boxes: Fan-powered pressure independent type, including chilled water and hot water coil section for office and support spaces. Pressure-dependent type terminal boxes for laboratory spaces, including chilled water and hot water coil section.

E. Cabinet Type Air Handling Heating and Ventilating Units: Complete with galvanized steel cabinet, coated with corrosion-resistant primer, centrifugal supply fan, chilled water and hot water coil sections, filters section for office, support and laboratory spaces.

F. Diffusers, Registers, and Grilles: To suit application.

G. General Exhaust Fan: Centrifugal type, single width, single inlet, suitable for roof mounting.

H. Laboratory Exhaust Fans: Centrifugal type, single width, single inlet, suitable for roof mounting. All surfaces exposed to the airstream shall be provided with a suitable coating.

SECTION 15950: CONTROLS

A. Scope: To include requirements for provision and installation of all temperature and pressurization controls and associated alarm systems. Control systems shall be of the Direct Digital Control (DDC) suitable for connection to the existing Building Automation System (BAS) on site.

SECTION 15990: AIR AND WATER BALANCING

A. Scope: To include requirements for balancing all air and hydronic systems.

DIVISION 16 - ELECTRICAL

SECTION 16010: GENERAL PROVISIONS

A. Conform to applicable standards of ANSI, ASTM, CBM, ETL, ICEA, IEEE, IES, ISA, NEMA, NETA, NFPA and UL.

B. Conform to rules and regulations of the California Administrative Codes including, but not limited to, Title 8 - Chapter 4, Subchapter 5.

SECTION 16050: BASIC ELECTRICAL MATERIALS AND METHODS

A. General: Building raceways, pullboxes, outlet boxes, conductors for low-voltage general wiring, wiring devices, supports, attachments and grounding, including routine insulation resistance, continuity and rotation tests.

B. Materials

1. Rigid, intermediate and flexible conduit and electrical metallic tubing.

2. Secondary cable, copper, 600V cables with No. 12 AWG minimum for power circuits and No. 14 AWG minimum for control circuits. Cable for the fire alarm system is specified in the Section dealing with that system.

3. Wiring devices, ivory switch handles or receptacles and stainless steel faceplates, including duplex outlets.

SECTION 16400: SERVICE AND DISTRIBUTION SYSTEM

A. General: Dry-type transformers, panelboards, and motor control center, motor circuit disconnect devices.

B. Equipment

1. Includes main and feeder circuit breakers, transformers, and circuit-breaker-equipped panelboards.

2. Dry-type transformers, UL-rated 220° C insulation, designed for 185° C ultimate temperature with 40° C ambient, 115° C average temperature rise and 30° C hot spot allowance. Provide quiet-type transformers with a sound level not exceeding 45 decibels. Provide transformers with taps and earthquake motion-restrained vibration isolaters.

3. Motor circuit disconnect devices, either combination circuit breaker/local motor controller type or normal duty disconnect switches.

4. Motor control center with Class I, Type B wiring. Individual starters shall have overloads in each phase and individual control power transformers.

SECTION 16481: VARIABLE FREQUENCY DRIVES

PART 1 GENERAL

1.01 WORK INCLUDED

A. Variable Frequency Drives.

B. Adjustable Frequency Controllers.

1.02 SYSTEM DESCRIPTION

A. Furnish and install Variable Frequency Drive(s) (VFD) and provide all wiring and interconnection, applications programming, and start-up and test services to provide variable speed fan/pump operation. It is the Subcontractor's responsibility to determine if the existing fan/pump motor is suitable for operation with VFD control.

PART 2 PRODUCTS

2.01 VARIABLE FREQUENCY DRIVE (VFD)

A. Saftronics Varispeed™, or MagnaTek™ GPD 503 Series.

2.02 ACCESSORIES

A. The VFDs shall include on-board self-diagnostics and indicators for troubleshooting of all operational problems.

PART 3 EXECUTION

3.01 INSTALLATION

A. The VFDs shall be totally enclosed in either wall-mounted or free-standing enclosures with a bypass panel.

SECTION 16500: LIGHTING

A. General: High-intensity discharge and fluorescent lighting for indoor locations.

B. Fixtures

1. Metal halide downlights for general lighting.

2. Fluorescent fixtures for general lighting.

3. Exit lights, incorporated with a fire alarm flashing/strobe module.

SECTION 16700: COMMUNICATIONS SYSTEM

A. General: Integrated Communication System (ICS), Energy Management and Control System (EMCS) and building-wide paging system.

B. Materials

1. Minimum conduit size, one inch.

2. Terminal cabinets, minimum size 24 inches high by 20 inches wide by four (4) inches deep.

3. ICS hallway cabletray, six inch by six inch, two inch conduit stub into rooms.

C. Devices

1. Wall or ceiling mounted speakers, volume controls, amplifier and microphones.

2. Universal Receptacle (UR) for voice and data services.

3. Supplemental Universal Receptacle (SUR) for local area networking, point to point data links, alarms, etc.

SECTION 16721: FIRE ALARM SYSTEM

A. General: Transmitter/receiver, control panel, smoke detectors, duct smoke detectors, manual stations, alarm bells, including fire alarm system acceptance tests.

B. Materials

1. Minimum conduit size: 3/4-inch.

2. Wiring, solid copper conductor as follows:

a. System 3 wiring, 600V insulation meeting NFPA 70, not less than No. 14 AWG for audible signaling devices and No. 16 AWG for alarm initiating devices.

b. MX-203 wiring, 300V insulation meeting HFPA 70, two twisted pair No. 18 AWG minimum configuration with each pair individually shielded for the signaling trunk and single or multiple twisted pair with an overall shield, not less than 18 AWG for single pair and No. 22 AWG for multiple pair for alarm initiating devices.

C. Devices

1. Transmitter/Receiver: Model MX-203 S2A (if required).

2. Control Panel: Add modules to the existing Pyrotronics System 3, with CP-35 control panel, PS-35 power supply, BC-35 battery charger, BA-30 battery pack, SM-30 switch modules, ZU-35 zone modules, and SR-32 and SR-33 relay modules.

3. Manual Stations: Interior stations, Gamewell Model No. 21868-8 with back box No. 43480.

4. Alarm Horns: Pyrotronics BDC-624 polarized 24V DC vibrating horn.

5. Smoke Detectors: Photoelectric type containing a visible indicator lamp that shows when the unit is in the alarm condition.

6. Duct Smoke Detectors: Detectors shall have a duct housing, mounted exterior to the duct, with perforated sampling tubes. Activation of a detector shall cause shutdown of the associated air-handling unit. Detectors shall be rated for the air velocity to be expected. Detectors shall be mounted in a readily accessible location. Detectors shall be capable of activating a remote indicating lamp on a remote annunciator.

SECTION 16915: LIGHTING CONTROL SYSTEM

PART 1 GENERAL

1.01 WORK INCLUDED

A. Occupancy Sensors.

B. Power Supply.

C. Control Wiring.

D. Control Panels.

1.02 SYSTEM DESCRIPTION

A. The purpose of the project is control the "on/off" operation of specific lighting and space conditioning systems. The means of accomplishing this

is through the installation of individual room lighting "occupancy sensors" to control the operation of the lighting and space conditioning systems utilizing both infrared and ultrasonic sensing technologies. Provide set of relay contacts for input to HVAC system.

PART 2 PRODUCTS

2.01 OCCUPANCY SENSOR

A. Combination infrared and ultrasonic ceiling mounted sensors with time-delay and a manual override shall be utilized.

PART 3 EXECUTION

3.01 INSTALLATION

A. Occupancy sensors shall be furnished for each room, ceiling-mounted and connect to both the lighting system and the BAS.

SECTION 16950: ACCEPTANCE TESTING

A. General: Services of an independent electrical testing laboratory to perform site acceptance tests on major electrical devices in accordance with industry and NETA standards.

B. Equipment To Be Tested:

1. Low-voltage cables rated at 600-volts.

2. Grounding system.

ALS BEAMLINES INITIATIVE

SECTION 7

ENERGY CONSERVATION

Project Overview

A. Total Projected Energy Usage: 252.05 x 10^7 BTU/YR (without equipment).

General In-House Energy Management Requirements

A. Design Policy

1. The DOE and the Lawrence Berkeley Laboratory (LBL) policy is to design buildings based on the lowest Life Cycle Cost.

B. Codes and Standards

1. DOE 6430.1A, General Design Criteria (especially Division I, Section 0110-12 Energy Conservation)

2. 10 CFR Part 435 Interim Rule (mandatory for LBL)

3. California Title 24

C. Metering

1. In general, the metering to be provided in the facility shall comply with DOE 6430.1A and 10 CFR Part 435 Interim Rule.

2. Each distinct utility provided energy service shall be metered to measure and record the amount of energy being delivered, based on energy content.

3. The energy delivery systems shall be arranged and metered to allow individual measurement of occupant lighting and outlet services, production processes, auxiliary systems, service water heating, space heating, space cooling, and HVAC delivery systems.

4. Provisions shall be made for the measurement of energy inputs and outputs (flow, temperature, pressure, etc.) to determine equipment energy consumption or installed performance capabilities and efficiencies of all heating, cooling, and HVAC delivery systems and equipment greater than 20kVA or 60,000 BTUH energy input.

D. Specification Outline

The following specification outline is meant only as a guide. Additional specifications under other divisions may be required to fully provide the identified energy conservation measures. See attached outline specifications.

1. Section 13810 Energy Monitoring and Control System - New Construction

2. Section 16481 Variable Frequency Drives

3. Section 16915 Lighting Control System

Identified Energy Conservation Opportunities

The following is a list of identified energy savings opportunities that should be incorporated in the building design when cost effective. However, this list provides a starting point only and is not meant to exclude other energy conservation features.

A. Opportunity #1

1. Major User: Building/Process Systems

2. Alternative

Energy Monitoring and Control System (EMCS): All mechanical systems shall be monitored and controlled by an EMCS. The EMCS shall employ a multi-level distributed processing architecture connected by a local area network. A Central Operator's Terminal (COT) shall act as the "host" and perform the highest level of processing. It shall communicate with both the system operator and the Field Processing Unit (FPUs). The FPUs shall be microprocessor based and perform specified data acquisition and stand-alone control functions of timed events, conditional control sequences, and Proportional-Integral-Derivative (PID) control.

3. Justification

Centralized Energy Monitoring and Control Systems are proven energy savers. The entire LBL site is in the process of being connected to an EMCS.

B. Opportunity #2

1. Major User: Lighting Systems

2. Alternative

Occupancy Controlled Lighting and HVAC: Generally, occupancy sensors that combine both infra-red and ultrasonic technologies shall be used (in addition to local manual switches) to control lighting, and as an input to the EMCS for HVAC temperature control and override.

3. Alternative

   High Efficiency Lighting: Fluorescent fixtures shall utilize T-8 lamps with solid state high frequency ballasts.

4. Justification

   The combination of occupancy sensors and high efficiency lighting provide rapid payback periods since energy use by a building's lighting system is typically its largest single energy consuming system.

C. Opportunity #3

1. Major User: Fans

2. Alternative

   Variable Frequency Drives (VFDs): Fan motors shall be controlled by VFDs.

3. Justification: VFDs are proven energy savers and reduce motor wear.

D. Opportunity #4

1. Major User: Motors

2. Alternative

   High Efficiency Motors: Motors of one half horsepower and larger shall be three-phase. All motors shall be highest efficiency available.

3. Justification

   High Efficiency Motors are proven energy savers and reduce motor wear.

E. Opportunity #5

1. Major User: Air Distribution

2. Alternative

   Variable Air Volume (VAV): VAV systems shall be utilized. Use fan powered VAV boxes or terminal cooling coils, reheat systems not allowed.

3. Justification

   VAV systems offer energy conservation by reducing heating and cooling energy and motor energy required by circulation pumps and fans.

F. Opportunity #6

1. Major User: Fume Hoods

2. Alternative

   Variable Volume Fume Hood Control: Provide sensors and controls to maintain a constant velocity through the open sash of each fume hood regardless of the sash position. This design feature shall also require room pressure control to maintain correct, safe pressure(s) relative to adjacent spaces.

3. Justification

   Large quantities of conditioned air are wasted without this design feature. Excessive motor energy is also expended unnecessarily. The added benefit of fume hood control is the increased safety of the operator.

ALS BEAMLINES INITIATIVE

SECTION 8

SAFETY AND ENVIRONMENTAL CONSIDERATIONS

Safety Considerations

An initial safety assessment review has been completed. A Preliminary Safety Analysis Document will be approved before the start of construction.

Operational Safety Procedures (OSPs) are mandatory for all potentially-hazardous experiments. The OSPs are reviewed by the Environment, Health and Safety Division and the appropriate subcommittee(s) of the Safety Review Committee. As a standard procedure of the Lawrence Berkeley Laboratory (LBL) safety program, all areas are inspected for compliance with federal OSHA and LBL standards.

Lawrence Berkeley Laboratory complies with DOE 6430.1A, General Design Criteria, 29 CFR 1910 and 29 CFR 1926. Design review of equipment and laboratory facilities and review of experimental procedure is expected to reduce any hazards to a "low hazard" classification.

Environmental Considerations

An initial environmental review has been made for this project. No adverse environmental impacts are expected on or off site. The project will have no impact on archeology, atmosphere, climate, flora, fauna or waste. There will be no underground tanks. An increase in the number of visiting scientists is expected, but this was evaluated and accounted for in the Environmental Assessment for the 1-2 GeV Synchrotron Light Source. The project is not located in a flood plain or wet lands. There are no environmental issues that will require unusual design or scheduling considerations.

It is anticipated that this project will fall within the action described in the above mentioned Environmental Assessment.

ALS BEAMLINES INITIATIVE

SECTION 9

DETAILED SUPPORTING DATA

Basis for Architectural Design

Basis for Structural Design

Basis for Mechanical Design

HVAC Load Calculations

Basis for Electrical Design

Cost Estimate Detail for Conventional Facilities

Details of Estimate for Special Building Facilities and Standard Equipment

Obligations and Costs Schedule (FY1992 $K)

ED&I Analysis

ALS BEAMLINES INITIATIVE

Basis for Architectural Design

ALS BEAMLINES INITIATIVE

BASIS FOR ARCHITECTURAL DESIGN

New Construction

1. Exterior Wall System at Building 6 (existing): New gypsum board finish over existing insulation. The interior separating wall (mezzanine from ALS high bay area) is in place. New paint finish.

2. Interior Partitions: New non-combustible metal studs finished with gypsum board, painted.

3. Ceilings: Suspended T-bar system, 9 feet high, lay-in accoustical panels in offices.

4. Floor Finish: Acid-resistant sheet vinyl with heat welded seams in laboratories, vinyl composition tile, 12" x 12" x 1/8", in corridor, carpet in offices.

5. Fume Hoods and Laboratory Furniture: New; metal base and wall cabinets.

6. Bathrooms: Ceramic tile floor and walls; gypsum board ceiling.

7. Office Systems Furniture: Demountable partitions with prewired base and modular furniture will be furnished in the "open plan" office areas.

ALS BEAMLINES INITIATIVE

Basis for Structural Design

4. STRUCTURAL SUMMARY

The EA was requested to analyze the structural design calculations for the second floor area to determine the feasibility of increasing the floor loading capacity and to provide necessary input for determining the cost impact associated thereto.

Conversion of designated office use space to laboratory use on the mezzanine of the Advanced Light Source Building required an increase in floor capacity from the original 50 psf to 125 psf. Additionally, a portion of the live load must be included with the dead load in computing seismic forces.

Floor framing and seismic systems as well as supporting columns and footings were reviewed for the increase to laboratory loading.

All existing system components have the necessary capacity for conversion except the intermediate radial girders. These members require the addition of a welded cover plate on the bottom flange. This operation requires shoring of the girders, welding the plates and removing and replacing fireproofing, any interfering piping, conduit or ductwork.

ALS BEAMLINES INITIATIVE

Basis for Mechanical Design

5. MECHANICAL SYSTEMS

5.1 DESIGN PARAMETERS

Design temperatures and heat transfer factors are taken from the ASHRAE Handbook of Fundamentals, 1989, Weather Data.

- Outside Design Temperatures:

Summer	Winter
85°F.db/65°F.wb	34°F.db

- Inside Design Temperatures:

  Administrative offices and support spaces provided with air conditioning:

  Summer: 76°F db
  Winter: 72°F db

Given the relatively mild climate that exists in the San Francisco Bay Area, control of the space relative humidity is not required. Humidity within the conditioned spaces will remain between 30% and 70% without the use of special systems or controls.

- Heat Transfer "U" Factors:

  For purpose of preliminary calculations, the following applicable values have been used.

	Summer	Winter
Roof:	0.05 BTU/ft^2-Hr-°F	0.05 BTU/Hr-ft^2-°F
Wall:	0.07 BTU/ft^2-Hr-°F	0.07 BTU/Hr-ft^2-°F
Windows:	0.35 BTU/ft^2-Hr-°F	0.31 BTU/Hr-ft^2-°F

5.2 HEATING

Heat for the second floor spaces will be supplied from the existing hot water heating system in Building 6. Under this contract the existing hot water supply and return mains will be tapped and new insulated branch piping extended to heating coils located in the variable air volume terminal units.

5.3 AIR CONDITIONING

In order to comply with the inside temperatures for personnel comfort identified in Section 1550 of DOE 6430.1A, the entire second floor area of Building 6 will be air conditioned. The system proposed to supply the laboratory areas is of the variable air volume type, utilizing terminal boxes located in the ceiling spaces. The variable air volume terminal boxes will be modulated by space pressure controllers which will regulate the quantity of supply air, as

required to maintain the laboratories at a pressure of -0.03-inches water column with respect to the adjacent corridors. In order to provide the required makeup air for the fume hoods, as well as ensure a safe working environment, the laboratory systems will utilize 100 percent outside air.

Outside air for the laboratories on the second floor of Building 6 will be provided by new air handling unit supplying this area. All supply air ductwork located downstream of the variable air volume terminal boxes will be insulated.

Heat for these areas will be supplied by hot water coils mounted adjacent to the variable air volume terminal boxes.

Cooling for these areas will be supplied by chilled water coils mounted adjacent to the variable air volume terminal boxes. Chilled water will be provided by the existing chilled water system serving Building 6.

Office and support areas will be served by a system utilizing fan-powered variable air volume terminal units. During periods when heating is required, the variable air volume terminal units will modulate to minimum supply air quantities. Should additional heat be required, the zone temperature direct digital control (DDC) system will modulate open the hot water control valve at the associated heating coil. During periods when cooling is required, the system will first utilize free outside air cooling whenever available. Should the outside air temperature rise above the inside design condition, the variable air volume terminal units will drive to minimum position, and the integral fans in the terminal units will be energized, providing return air to the zones. The zone temperature direct digital control system will then modulate the chilled water control valves at the variable air volume terminal units as required to maintain space temperature. Outside air for the office and support areas will be supplied from the air handling units serving the second floor spaces.

All air handling units will be provided with fan capacity control utilizing variable frequency drives. The direct digital control (DDC) system, with associated static pressure sensors located in the supply air ductwork, shall modulate the variable frequency drives to maintain the required duct static pressure.

5.4 GENERAL EXHAUST

A general exhaust system will be provided for office and support areas on the second floor of Building 6. The general exhaust system will be utilized to remove from the building the outside air that is brought in for ventilation and free cooling when available. The general exhaust systems will be provided with variable frequency drives, such that the exhaust air quantities can be adjusted as required to maintain a slight positive pressure in the building.

5.5 MECHANICAL COOLING

Cooling for the office and support spaces will be supplied from the existing chilled water system serving Building 6. Under this contract the existing chilled water supply and return mains will be tapped and new insulated branch piping extended to cooling coils located at the variable air volume terminal units.

5.6 PLUMBING AND PROCESS PIPING SYSTEMS

All plumbing fixtures will be provided and installed in accordance with the Uniform Plumbing Code (UPC). The design of the plumbing system shall be in accordance with DOE Manual 6430.1, Chapters 5 and 17.

Process piping systems will be provided under future laboratory development projects as required. Process piping will be routed in the ceiling spaces of the laboratory areas. Process piping systems expected to be included are summarized as follows:

Compressed air
Non-potable industrial hot and cold water
Low-conductivity water (LCW)
Natural gas

Industrial water, low conductivity water, natural gas, and compressed air will be extended into these areas from the existing systems located in the facility.

Laboratory waste from sinks within the spaces will be collected into sumps located below the laboratory counters. Small Individual lift pumps will then be used to transport the waste in overhead piping to an acid neutralization system. Once neutralized, the waste will be routed to the first floor for connection to the sanitary sewer.

5.7 FIRE PROTECTION SYSTEM

Existing fire protection systems within the second floor area will be modified to suit the revised wall layout.

ALS BEAMLINES INITIATIVE

HVAC Load Calculations

WEATHER DATA:

FROM ASHRAE FUNDAMENTALS, 1985 WEATHER DATA:

	SUMMER	WINTER
LABORATORIES	85°F D.B./65°F WB	34°F DB
OTHER	80°F D.B./63°F WB	34°F DB

INSIDE DESIGN TEMPERATURES:

SUMMER: 76°F DB WINTER: 72°F DB

U-VALUES

FOR THE PURPOSE OF PRELIMINARY CALCULATIONS THE FOLLOWING VALUES HAVE BEEN USED

	SUMMER	WINTER
ROOF	.05 BTU/ft²·HR·°F	.05
WALL	.07 "	.07
WINDOWS	.35 "	.31 BTUH/ft²-F°

CLTD FOR WALLS.

FROM ASHRAE 1985 FUNDAMENTALS
TABLES 6, 7, GROUP E WALL 8" BLOCK

FOR GROUP E WALLS, @ 1600 HOURS
AND TABLE 9 LATITUDE MONTH MAY/JULY

	CLTD	LM
N	17	0
NE	26	0
E	34	0
SE	36	0
S	32	1
SW	32	0
W	27	0
NW	20	0

K = 1.0 ASSUME DARK COLORING + INDUSTRIAL AREA

$T_R = 76°F$ INDOOR DESIGN TEMP.

$T_O = 85°F$ OUTDOOR DESIGN TEMP.

THEREFORE THE CORRECTED CLTD SHALL BE (PER ASHRAE)

$$CLTD_{CORR} = [(CLTD + LM) * K + (78 - T_R) + (T_O - 85)$$

$$= (CLTD + LM) * 1.0 + (78 - 76) + (85 - 85)$$

$$= (CLTD + LM) \times 1.0 + 2$$

		CLTD		LM		CORR	=	$CLTD_{CORR}$
N	=	17	+	0	+	2	=	19
NE	=	26	+	0	+	2	=	28
E	=	34	+	0	+	2	=	36
SE	=	36	+	0	+	2	=	38
S	=	32	+	1	+	2	=	35
SW	=	32	+	0	+	2	=	34
W	=	27	+	0	+	2	=	29
NW	=	20	+	0	+	2	=	22

ROOF CLTD

1985 FUNDAMENTALS, CHAP 26 TABLE 5, ROOF TYPE 9, WITH SUSPENDED CEILING. @ 1600 HRS

CLTD = 34

LM = 1

F = 1.0 FACTOR FOR CEILING SPACE VENTILATION
1 = NO VENTILATION

K = 1.0 DARK COLOR

$$CLTD_{CORR} = \left[(CLTD + LM)\cdot K + (78-76) + 85-85\right] F$$

$$CLTD_{CORR} = \left[(34+1) * 1.0 + (78-76) + (85-85)\right] 1.0$$

ROOF $CLTD_{CORR}$ = 37

RM 101-1/8

COMPUTATION SHEET

Keller & Gannon
Engineers-Architects

COMPUTED BY J C CASE
CHECKED BY
DATE APR 1992 19
REV. 19

SHGF

PROJECT 16-199-13
ALS 2ND FLOOR
BLDG 6
SHEET NO. 4 OF 47 SHEETS

MAXIMUM SHGF FOR FENSTRATION

FROM CHAPTER 26 TABLE 11, MSHGF @ 40°N
IN TUY

	MSHGF	CLF (MEDIUM CONST ROOM) @ 1600
N	38	.74
NE/NW	163	.26/.42
E/W	216	.26/.50
SE/SW	170	.33/.58
S	109	.47

ASSUME SHADING COEFFICIENT OF 0.80

1-1/8

Keller & Gannon
Engineers–Architects

COMPUTATION SHEET

COMPUTED BY J CASE
CHECKED BY
DATE APR. 1992 19
REV. 19

COOLING LOAD
BLDG #6, OFFICES (TYP)

PROJECT 16-199-13
ALS-2ND FLOOR
BLDG-6
SHEET NO. 5 OF 47 SHEETS

Space Used For
Size 10 × 16 = 160 SQ FT × 14 = 2240 CU FT

ITEM	AREA OR QUANTITY	SUN GAIN OR TEMP. DIFF.	FACTOR	BTU/HOUR
SOLAR GAIN–GLASS				
Glass	28 SQ FT ×	163	× .42 × .8	1530
Glass	SQ FT ×		×	
Glass	SQ FT ×		×	
Glass	SQ FT ×		×	
Skylight	SQ FT ×		×	
SOLAR & TRANS. GAIN–WALLS & ROOF				
Wall	112 SQ FT ×	22	× .05	120
Wall	SQ FT ×		×	
Wall	SQ FT ×		×	
Wall	SQ FT ×		×	
Roof-Sun	160 SQ FT ×	37	× .07	410
Roof–Shaded	SQ FT ×		×	
TRANS. GAIN–EXCEPT WALLS & ROOF				
All Glass	SQ FT ×		×	
Partition	SQ FT ×		×	
Ceiling	SQ FT ×		×	
Floor	SQ FT ×		×	
Infiltration	CFM ×		× 1.08	
INTERNAL HEAT				
People	1	PEOPLE ×	315	320
Power	400 WATTS (1 PC)	~~HP OR KW~~	3.413	1370
Lights	1.0 W/SF	WATTS × 3.4 ×		550
Appliances, Etc.		×		
Additional Heat Gains		×		
		SUB TOTAL		4300
Storage	SQ FT ×	× (–)		
		SUB TOTAL		
Safety Factor	5 %			210
		ROOM SENSIBLE HEAT		4510
SUPPLY DUCT HEAT GAIN	SUPPLY DUCT % + LEAK. LOSS	FAN % + H. P.	%	
Outdoor Air	CFM ×	F ×	BF × 1.08	
		EFFECTIVE ROOM SENSIBLE HEAT		
LATENT HEAT				
Infiltration	CFM ×		GR/LB × 0.68	
People	PEOPLE ×			
Steam	LB/HR × 1050			
Appliances, Etc.				
Additional Heat Gains				
Vapor Trans.	SQ × 1/100 ×	GR/LB ×		
		SUB TOTAL		
Safety Factor	%			
		ROOM LATENT HEAT		
SUPPLY DUCT LEAKAGE LOSS		%		
Outdoor Air	CFM ×	GR/LB ×	BF × 0.68	
		EFFECTIVE ROOM LATENT HEAT		
		EFFECTIVE ROOM TOTAL HEAT		
OUTDOOR AIR HEAT				
Sensible:	15 CFM ×	4 F × (1–	0 BF) × 1.08	60
Latent:	CFM ×	GR/LB × (1–	BF) × 0.68	
RETURN DUCT HEAT GAIN	RETURN DUCT % + LEAK. GAIN	HP % + PUMP	SUB TOTAL DEHUM. & % + PIPE LOSS %	
		GRAND TOTAL HEAT		4570

Estimate for — LOCAL TIME SUN TIME
Peak Load — LOCAL TIME SUN TIME
Hours of Operation

CONDITIONS	DB	WB	% RH	DP	GR/LB
OUTDOOR (OA)	80				
ROOM (RM)	76				
DIFFERENCE	4				

OUTDOOR AIR

VENTILATION: 1 PEOPLE × 15 CFM/PERSON = 15
SQ FT × CFM/SQ FT =
CFM VENTILATION

INFILTRATION: SWINGING REVOLVING DOORS PEOPLE × CFM/PERSON =
OPEN DOORS DOORS × CFM/DOOR =
EXHAUST FAN
CRACK FEET × CFM/FT =
CFM INFILTRATION

CFM OUTDOOR AIR THRU APPARATUS

APPARATUS DEWPOINT

ESHF: EFFECTIVE SENS HEAT FACTOR = EFFECTIVE ROOM SENS. HEAT / EFFECTIVE ROOM TOTAL HEAT =

ADP: INDICATED ADP = F SELECTED ADP = F

DEHUMIDIFIED AIR QUANTITY

TEMP RISE: (1– BF) × (T_RM F – T_ADP F) = F

DEHUM. CFM: EFFECTIVE ROOM SENS. HEAT / 1.08 × F_TEMP. RISE = CFM_OA

OUTLET TEMP. DIFF.: ROOM SENS. HEAT / 1.08 × CFM_OA = F (RM–OUTLET AIR)*

SUPPLY AIR QUANTITY

SUPPLY CFM: 4650 ROOM SENS. HEAT / 1.08 × 20 F DESIRED DIFF = 215 CFM_SA

BYPASS CFM: CFM_SA – CFM_OA = CFM_BA

RESULTING ENT & LVG CONDITIONS AT APPARATUS

EDB: T_RM F + CFM_OA / CFM† × (T_OA F – T_RM F) = T_EDB F

LDB: T_ADP F + BF × (T_EDB F – T_ADP F) = T_LDB F
FROM PSYCH. CHART: T_EWB F, T_LWB F

NOTES

215 CFM TOTAL
15 CFM O.A.
4,570 BTUH

*IF THIS ΔT IS TOO HIGH, DETERMINE SUPPLY CPM FOR DESIRED DIFFERENCE BY SUPPLY AIR QUANTITY FORMULA.
†WHEN BYPASSING A MIXTURE OF OUTDOOR AND RETURN AIR, USE SUPPLY CPM. WHEN BYPASSING RETURN AIR ONLY, USE DEHUMIDIFIED CPM.

E-5024

AIR CONDITIONING LOAD ESTIMATE (REPRODUCED BY PERMISSION OF CARRIER CORPORATION)

Keller & Gannon
Engineers-Architects

COMPUTATION SHEET

COMPUTED BY J C CASE
CHECKED BY
DATE APR 1992 19
REV. 19

COOLING LOAD
BLDG #6 LAB (EAST)

PROJECT 16-199-13
ALS-2ND FLOOR
BLDG 6
SHEET NO. 6 OF 47 SHEETS

Space Used For
Size 23 × 20 = 460 SQ FT × 14 = 6440 CU FT

ITEM	AREA OR QUANTITY	SUN GAIN OR TEMP. DIFF.	FACTOR	BTU/HOUR
SOLAR GAIN—GLASS				
Glass	SQ FT ×		×	
Glass	SQ FT ×		×	
Glass	SQ FT ×		×	
Glass	SQ FT ×		×	
Skylight	SQ FT ×		×	
SOLAR & TRANS. GAIN—WALLS & ROOF				
Wall	SQ FT ×		×	
Wall	SQ FT ×		×	
Wall	SQ FT ×		×	
Wall	SQ FT ×		×	
Roof-Sun	460 SQ FT ×	37	× .05	850
Roof-Shaded	SQ FT ×		×	
TRANS. GAIN—EXCEPT WALLS & ROOF				
All Glass	SQ FT ×		×	
Partition	SQ FT ×		×	
Ceiling	SQ FT ×		×	
Floor	SQ FT ×		×	
Infiltration	CFM ×		× 1.08	
INTERNAL HEAT				
People	3	PEOPLE ×	315	950
Power	2.5 W/SF ~~HP OR KW~~		× 3.413	3920
Lights	1.0 W/SF ~~WATTS~~		× 3.413	1570
Appliances, Etc.			×	
Additional Heat Gains			×	
			SUB TOTAL	7290
Storage	SQ FT ×		× (–)	
			SUB TOTAL	
Safety Factor	5 %			360
			ROOM SENSIBLE HEAT	7650
SUPPLY DUCT HEAT GAIN	SUPPLY DUCT % + LEAK. LOSS		FAN % + H. P. %	
Outdoor Air	CFM ×	F ×	BF × 1.08	
			EFFECTIVE ROOM SENSIBLE HEAT	
LATENT HEAT				
Infiltration	CFM ×		GR/LB × 0.68	
People	PEOPLE ×			
Steam	LB/HR × 1050			
Appliances, Etc.				
Additional Heat Gains				
Vapor Trans.	SQ × 1/100 ×		GR/LB ×	
			SUB TOTAL	
Safety Factor	%			
			ROOM LATENT HEAT	
SUPPLY DUCT LEAKAGE LOSS			%	
Outdoor Air	CFM ×	GR/LB ×	BF × 0.68	
			EFFECTIVE ROOM LATENT HEAT	
			EFFECTIVE ROOM TOTAL HEAT	
OUTDOOR AIR HEAT				
Sensible	825 CFM ×	9 F × (1–	0 BF) × 1.08	8020
Latent	CFM ×	GR/LB × (1–	BF) × 0.68	
RETURN DUCT HEAT GAIN	RETURN DUCT % + LEAK. GAIN	HP % + PUMP	SUB TOTAL DEHUM. & % + PIPE LOSS %	
			GRAND TOTAL HEAT	15670

Estimate for — LOCAL TIME / SUN TIME
Peak Load — LOCAL TIME / SUN TIME

Hours of Operation

CONDITIONS	DB	WB	% RH	DP	GR/LB
OUTDOOR (OA)	85				
ROOM (RM)	76				
DIFFERENCE	9				

OUTDOOR AIR

VENTILATION: ____ PEOPLE × ____ CFM/PERSON = ____
____ SQ FT × ____ CFM/SQ FT = ____
CFM VENTILATION

INFILTRATION: SWINGING / REVOLVING DOORS ____ PEOPLE × ____ CFM/PERSON = ____
OPEN DOORS ____ DOORS × ____ CFM/DOOR = ____
EXHAUST FAN ____
CRACK ____ FEET × ____ CFM/FT = ____
CFM INFILTRATION

CFM OUTDOOR AIR THRU APPARATUS

APPARATUS DEWPOINT

ESHF: EFFECTIVE SENS HEAT FACTOR = EFFECTIVE ROOM SENS. HEAT / EFFECTIVE ROOM TOTAL HEAT = ____

ADP: INDICATED ADP = ____ F SELECTED ADP = ____ F

DEHUMIDIFIED AIR QUANTITY

TEMP RISE: (1– ____ BF) × (T_{RM} ____ F – T_{ADP} ____ F) = ____ F

DEHUM. CFM: EFFECTIVE ROOM SENS. HEAT / (1.08 × $F_{TEMP. RISE}$) = ____ CFM_{DA}

OUTLET TEMP. DIFF.: ROOM SENS. HEAT / (1.08 × CFM_{DA}) = ____ $F_{(RM-OUTLET\ AIR)}$*

SUPPLY AIR QUANTITY

SUPPLY CFM: 7650 ROOM SENS. HEAT / (1.08 × 20 F DESIRED DIFF) = 355 CFM_{SA}

BYPASS CFM: ____ CFM_{SA} – ____ CFM_{DA} = ____ CFM_{BA}

RESULTING ENT & LVG CONDITIONS AT APPARATUS

EDB: T_{RM} ____ F + (CFM_{DA} / CFM) × (T_{OA} ____ F – T_{RM} ____ F) = T_{EDB} ____ F

LDB: T_{ADP} ____ F + ____ BF × (T_{EDB} ____ F – T_{ADP} ____ F) = T_{LDB} ____ F
FROM PSYCH. CHART: T_{EWB} ____ F, T_{LWB} ____ F

NOTES

HOOD REQUIREMENTS =
1000 CFM ∴
ROOM REQUIREMENTS =
825 CFM
15,670 BTUH

*IF THIS ΔT IS TOO HIGH, DETERMINE SUPPLY CFM FOR DESIRED DIFFERENCE BY SUPPLY AIR QUANTITY FORMULA.
WHEN BYPASSING A MIXTURE OF OUTDOOR AND RETURN AIR, USE SUPPLY CFM.
WHEN BYPASSING RETURN AIR ONLY, USE DEHUMIDIFIED CFM.

E-5024

AIR CONDITIONING LOAD ESTIMATE (REPRODUCED BY PERMISSION OF CARRIER CORPORATION)

Keller & Gannon
Engineers–Architects

COMPUTATION SHEET

COMPUTED BY J CASE
CHECKED BY
DATE APR 1992 19
REV. 19

COOLING LOADS
BLDG #6, VERTICAL BEAM

PROJECT 16-199-13
ALS-2ND FLOOR
BLDG 6
SHEET NO. 2 OF 47 SHEETS

Space Used For
Size 17 × 16 = 272 SQ FT × 14 = 3808 CU FT

ITEM	AREA OR QUANTITY	SUN GAIN OR TEMP. DIFF.	FACTOR	BTU/HOUR
SOLAR GAIN–GLASS				
Glass	SQ FT ×		×	
Glass	SQ FT ×		×	
Glass	SQ FT ×		×	
Glass	SQ FT ×		×	
Skylight	SQ FT ×		×	
SOLAR & TRANS. GAIN–WALLS & ROOF				
Wall	SQ FT ×		×	
Wall	SQ FT ×		×	
Wall	SQ FT ×		×	
Wall	SQ FT ×		×	
Roof-Sun	272 SQ FT ×	37	× .05	500
Roof–Shaded	SQ FT ×		×	
TRANS. GAIN–EXCEPT WALLS & ROOF				
All Glass	SQ FT ×		×	
Partition	SQ FT ×		×	
Ceiling	SQ FT ×		×	
Floor	SQ FT ×		×	
Infiltration	CFM ×		× 1.08	
INTERNAL HEAT				
People	2 PEOPLE ×	315		630
Power	3.0 W/SF HP OR KW ×			2790
Lights	1.0 W/SF WATTS × 3.4 ×			930
Appliances, Etc.			×	
Additional Heat Gains			×	
			SUB TOTAL	4850
Storage	SQ FT ×		× (–)	
			SUB TOTAL	
Safety Factor	5 %			240
			ROOM SENSIBLE HEAT	5090
SUPPLY DUCT HEAT GAIN	SUPPLY DUCT % + LEAK. LOSS	FAN % + H. P.	%	
Outdoor Air	CFM ×	F ×	BF × 1.08	
			EFFECTIVE ROOM SENSIBLE HEAT	
LATENT HEAT				
Infiltration	CFM ×		GR/LB × 0.68	
People	PEOPLE ×			
Steam	LB/HR × 1050			
Appliances, Etc.				
Additional Heat Gains				
Vapor Trans.	SQ × 1/100 ×		GR/LB ×	
			SUB TOTAL	
Safety Factor	%			
			ROOM LATENT HEAT	
SUPPLY DUCT LEAKAGE LOSS			%	
Outdoor Air	CFM ×	GR/LB ×	BF × 0.68	
			EFFECTIVE ROOM LATENT HEAT	
			EFFECTIVE ROOM TOTAL HEAT	
OUTDOOR AIR HEAT				
Sensible:	235 CFM ×	9 F × (1–	0 BF) × 1.08	2780
Latent:	CFM ×	GR/LB × (1–	BF) × 0.68	
RETURN DUCT HEAT GAIN	RETURN DUCT % + LEAK. GAIN	HP % + PUMP	SUB TOTAL DEHUM. & % + PIPE LOSS %	
			GRAND TOTAL HEAT	7370

Estimate for — LOCAL TIME / SUN TIME
Peak Load — LOCAL TIME / SUN TIME
Hours of Operation

CONDITIONS	DB	WB	% RH	DP	GR/LB
OUTDOOR (OA)	85				
ROOM (RM)	76				
DIFFERENCE	9				

OUTDOOR AIR

VENTILATION: ____ PEOPLE × ____ CFM/PERSON = ____
____ SQ FT × ____ CFM/SQ FT = ____
CFM VENTILATION

INFILTRATION: SWINGING/REVOLVING DOORS ____ PEOPLE × ____ CFM/PERSON = ____
OPEN DOORS ____ DOORS × ____ CFM/DOOR = ____
EXHAUST FAN ____
CRACK ____ FEET × ____ CFM/FT = ____
CFM INFILTRATION

CFM OUTDOOR AIR THRU APPARATUS

APPARATUS DEWPOINT

ESHF: EFFECTIVE SENS HEAT FACTOR = EFFECTIVE ROOM SENS. HEAT / EFFECTIVE ROOM TOTAL HEAT = ____

ADP: INDICATED ADP = ____ F SELECTED ADP = ____ F

DEHUMIDIFIED AIR QUANTITY

TEMP RISE: (1– ____ BF) × (T_{RM} ____ F – T_{ADP} ____ F) = ____ F

DEHUM. CFM: EFFECTIVE ROOM SENS. HEAT / 1.08 × $F_{TEMP.\ RISE}$ = ____ CFM_{DA}

OUTLET TEMP. DIFF.: ROOM SENS. HEAT / 1.08 × CFM_{DA} = ____ $F_{(RM-OUTLET\ AIR)}$*

SUPPLY AIR QUANTITY

SUPPLY CFM: 5090 ROOM SENS. HEAT / 1.08 × 20 F DESIRED DIFF = 235 CFM_{SA}

BYPASS CFM: ____ CFM_{SA} – ____ CFM_{DA} = ____ CFM_{BA}

RESULTING ENT & LVG CONDITIONS AT APPARATUS

EDB: T_{RM} ____ F + (CFM_{DA} / CFM?) × (T_{OA} ____ F – T_{RM} ____ F) = T_{EDB} ____ F

LDB: T_{ADP} ____ F + ____ BF × (T_{EDB} ____ F – T_{ADP} ____ F) = T_{LDB} ____ F
FROM PSYCH. CHART: T_{EWB} ____ F, T_{LWB} ____ F

NOTES

235 CFM O.A.

7370 BTUH

*IF THIS ΔT IS TOO HIGH, DETERMINE SUPPLY CFM FOR DESIRED DIFFERENCE BY SUPPLY AIR QUANTITY FORMULA.
WHEN BYPASSING A MIXTURE OF OUTDOOR AND RETURN AIR, USE SUPPLY CFM. WHEN BYPASSING RETURN AIR ONLY, USE DEHUMIDIFIED CFM.

E-5024

AIR CONDITIONING LOAD ESTIMATE (REPRODUCED BY PERMISSION OF CARRIER CORPORATION)

Keller & Gannon
Engineers–Architects

COMPUTATION SHEET

COMPUTED BY J C CASE
CHECKED BY
DATE APR. 1992 19
REV. 19

COOLING LOAD
BLDG #6, DARK ROOM

PROJECT 16 199-13
ALS-2ND FLOOR
BLDG 6
SHEET NO. 8 OF 47 SHEETS

Space Used For
Size 6 × 10 = 60 SQ FT × 14 = 840 CU FT

ITEM	AREA OR QUANTITY	SUN GAIN OR TEMP. DIFF.	FACTOR	BTU/HOUR
SOLAR GAIN—GLASS				
Glass	SQ FT ×		×	
Glass	SQ FT ×		×	
Glass	SQ FT ×		×	
Glass	SQ FT ×		×	
Skylight	SQ FT ×		×	
SOLAR & TRANS. GAIN—WALLS & ROOF				
Wall	SQ FT ×		×	
Wall	SQ FT ×		×	
Wall	SQ FT ×		×	
Wall	SQ FT ×		×	
Roof-Sun	60 SQ FT ×	37	× .05	118
Roof-Shaded	SQ FT ×		×	
TRANS. GAIN—EXCEPT WALLS & ROOF				
All Glass	SQ FT ×		×	
Partition	SQ FT ×		×	
Ceiling	SQ FT ×		×	
Floor	SQ FT ×		×	
Infiltration	CFM ×		× 1.08	
INTERNAL HEAT				
People	1	PEOPLE ×	315	320
Power	1.0 W/SF	HP OR KW ×		205
Lights	1.0 W/SF	WATTS × 3.4 ×		205
Appliances, Etc.			×	
Additional Heat Gains			×	
			SUB TOTAL	840
Storage	SQ FT ×		× (–)	
			SUB TOTAL	
Safety Factor	5 %			40
			ROOM SENSIBLE HEAT	880
SUPPLY DUCT HEAT GAIN	SUPPLY DUCT % + LEAK. LOSS	FAN % + H. P.	%	
Outdoor Air	CFM ×	F ×	BF × 1.08	
			EFFECTIVE ROOM SENSIBLE HEAT	
LATENT HEAT				
Infiltration	CFM ×		GR/LB × 0.68	
People	PEOPLE ×			
Steam	LB/HR × 1050			
Appliances, Etc.				
Additional Heat Gains				
Vapor Trans.	SQ × 1/100 ×		GR/LB ×	
			SUB TOTAL	
Safety Factor	%			
			ROOM LATENT HEAT	
SUPPLY DUCT LEAKAGE LOSS			%	
Outdoor Air	CFM ×	GR/LB ×	BF × 0.68	
			EFFECTIVE ROOM LATENT HEAT	
			EFFECTIVE ROOM TOTAL HEAT	
OUTDOOR AIR HEAT				
Sensible:	40 CFM ×	9 F × (1–	0 BF) × 1.08	390
Latent:	CFM ×	GR/LB × (1–	BF) × 0.68	
RETURN DUCT HEAT GAIN	RETURN DUCT % + LEAK. GAIN	HP % + PUMP	SUB TOTAL DEHUM. & % + PIPE LOSS %	
			GRAND TOTAL HEAT	1270

Estimate for	LOCAL TIME SUN TIME	Peak Load	LOCAL TIME SUN TIME

Hours of Operation

CONDITIONS	DB	WB	% RH	DP	GR/LB
OUTDOOR (OA)	85				
ROOM (RM)	76				
DIFFERENCE	9				

OUTDOOR AIR

VENTILATION: PEOPLE = CFM/PERSON = ; SQ FT = CFM/SQ FT = ; CFM VENTILATION

INFILTRATION: SWINGING REVOLVING DOORS PEOPLE = CFM/PERSON = ; OPEN DOORS DOORS = CFM/DOOR = ; EXHAUST FAN ; CRACK FEET = CFM/FT = ; CFM INFILTRATION

CFM OUTDOOR AIR THRU APPARATUS

APPARATUS DEWPOINT

ESHF: EFFECTIVE SENS HEAT FACTOR = EFFECTIVE ROOM SENS. HEAT / EFFECTIVE ROOM TOTAL HEAT =

ADP: INDICATED ADP = F SELECTED ADP = F

DEHUMIDIFIED AIR QUANTITY

TEMP RISE: (1– BF) × (T_RM F – T_ADP F) = F

DEHUM. CPM: EFFECTIVE ROOM SENS. HEAT / 1.08 × F_TEMP. RISE = CFM_OA

OUTLET TEMP. DIFF.: ROOM SENS. HEAT / 1.08 × CFM_OA = F (RM–OUTLET AIR)*

SUPPLY AIR QUANTITY

SUPPLY CPM: 880 ROOM SENS. HEAT / 1.08 × 20 F DESIRED DIFF = 40 CFM_SA

BYPASS CPM: CFM_SA – CFM_OA = CFM_BA

RESULTING ENT & LVG CONDITIONS AT APPARATUS

EDB: T_RM F + CFM_OA / CFM† × (T_OA F – T_RM F) = T_EDB F

LDB: T_ADP F + BF × (T_EDB F – T_ADP F) = T_LDB F

FROM PSYCH. CHART: T_EWB F, T_LWB F

NOTES

40 CFM O.A.

1,270 BTUH

*IF THIS ΔT IS TOO HIGH, DETERMINE SUPPLY CPM FOR DESIRED DIFFERENCE BY SUPPLY AIR QUANTITY FORMULA.

†WHEN BYPASSING A MIXTURE OF OUTDOOR AND RETURN AIR, USE SUPPLY CPM. WHEN BYPASSING RETURN AIR ONLY, USE DEHUMIDIFIED CPM.

E-5024

AIR CONDITIONING LOAD ESTIMATE (REPRODUCED BY PERMISSION OF CARRIER CORPORATION)

Keller & Gannon
Engineers–Architects

COMPUTATION SHEET

COMPUTED BY J C CASE
CHECKED BY
DATE APR. 1992 19
REV. 19

COOLING LOAD
BLDG #6, MICROSCOPE RM

PROJECT 16-199-B1
ALS - 2ND FLOOR
BLDG 6
SHEET NO. 9 OF 47 SHEETS

Space Used For
Size 6 × 10 = 60 SQ FT × 14 = 840 CU FT

ITEM	AREA OR QUANTITY	SUN GAIN OR TEMP. DIFF.	FACTOR	BTU/HOUR
SOLAR GAIN—GLASS				
Glass	SQ FT ×		×	
Glass	SQ FT ×		×	
Glass	SQ FT ×		×	
Glass	SQ FT ×		×	
Skylight	SQ FT ×		×	
SOLAR & TRANS. GAIN—WALLS & ROOF				
Wall	SQ FT ×		×	
Wall	SQ FT ×		×	
Wall	SQ FT ×		×	
Wall	SQ FT ×		×	
Roof-Sun	60 SQ FT ×	37	× .05	116
Roof-Shaded	SQ FT ×		×	
TRANS. GAIN—EXCEPT WALLS & ROOF				
All Glass	SQ FT ×		×	
Partition	SQ FT ×		×	
Ceiling	SQ FT ×		×	
Floor	SQ FT ×		×	
Infiltration	CFM ×		× 1.08	
INTERNAL HEAT				
People	1 PEOPLE ×	315		320
Power	2.0 W/SF		–HP OR KW ×	410
Lights	1.0 W/SF		WATTS × 3.4 ×	210
Appliances, Etc.			×	
Additional Heat Gains			×	
			SUB TOTAL	1050
Storage	SQ FT ×		× (–)	
			SUB TOTAL	
Safety Factor	5 %			50
			ROOM SENSIBLE HEAT	1100
SUPPLY DUCT HEAT GAIN	SUPPLY DUCT % + LEAK. LOSS		FAN % + M. P. %	
Outdoor Air	CFM ×	F ×	BF × 1.08	
			EFFECTIVE ROOM SENSIBLE HEAT	
LATENT HEAT				
Infiltration	CFM ×		GR/LB × 0.68	
People	PEOPLE ×			
Steam	LB/HR × 1050			
Appliances, Etc.				
Additional Heat Gains				
Vapor Trans.	SQ × 1/100 ×		GR/LB ×	
			SUB TOTAL	
Safety Factor	%			
			ROOM LATENT HEAT	
SUPPLY DUCT LEAKAGE LOSS			%	
Outdoor Air	CFM ×	GR/LB ×	BF × 0.68	
			EFFECTIVE ROOM LATENT HEAT	
			EFFECTIVE ROOM TOTAL HEAT	
OUTDOOR AIR HEAT				
Sensible:	51 CFM ×	9 F × (1–	0 BF) × 1.08	500
Latent:	CFM ×	GR/LB × (1–	BF) × 0.68	
RETURN DUCT HEAT GAIN	RETURN DUCT % + LEAK. GAIN	HP % + PUMP	SUB TOTAL DEHUM. & % + PIPE LOSS %	
			GRAND TOTAL HEAT	1600

Estimate for	LOCAL TIME SUN TIME	Peak Load	LOCAL TIME SUN TIME

Hours of Operation

CONDITIONS	DB	WB	% RH	DP	GR/LB
OUTDOOR (OA)	85				
ROOM (RM)	76				
DIFFERENCE	9				

OUTDOOR AIR

VENTILATION: PEOPLE = CFM/PERSON = ; SQ FT = CFM/SQ FT = ; CFM VENTILATION

INFILTRATION: SWINGING REVOLVING DOORS PEOPLE = CFM/PERSON = ; OPEN DOORS DOORS = CFM/DOOR = ; EXHAUST FAN ; CRACK FEET = CFM/FT = ; CFM INFILTRATION

CFM OUTDOOR AIR THRU APPARATUS

APPARATUS DEWPOINT

ESHF: EFFECTIVE SENS HEAT FACTOR = EFFECTIVE ROOM SENS. HEAT / EFFECTIVE ROOM TOTAL HEAT =

ADP: INDICATED ADP = F SELECTED ADP = F

DEHUMIDIFIED AIR QUANTITY

TEMP RISE: (1– BF) × (T_{RM} F – T_{ADP} F) = F

DEHUM. CFM: EFFECTIVE ROOM SENS. HEAT / 1.08 × $F_{TEMP.\ RISE}$ = CFM_{OA}

OUTLET TEMP. DIFF.: ROOM SENS. HEAT / 1.08 × CFM_{OA} = F (RM–OUTLET AIR)*

SUPPLY AIR QUANTITY

SUPPLY CFM: 1100 ROOM SENS. HEAT / 1.08 × 20 F DESIRED DIFF = 51 CFM_{SA}

BYPASS CFM: CFM_{SA} – CFM_{OA} = CFM_{BA}

RESULTING ENT & LVG CONDITIONS AT APPARATUS

EDB: T_{RM} F + (CFM_{OA} / CFM†) × (T_{OA} F – T_{RM} F) = T_{EDB} F

LDB: T_{ADP} F + BF × (T_{EDB} F – T_{ADP} F) = T_{LDB} F

FROM PSYCH. CHART: T_{EWB} F, T_{LWB} F

NOTES

51 CFM O.A.

1,600 BTUH

*IF THIS ΔT IS TOO HIGH, DETERMINE SUPPLY CPM FOR DESIRED DIFFERENCE BY SUPPLY AIR QUANTITY FORMULA.
†WHEN BYPASSING A MIXTURE OF OUTDOOR AND RETURN AIR, USE SUPPLY CPM. WHEN BYPASSING RETURN AIR ONLY, USE DEHUMIDIFIED CPM.

E-5024

AIR CONDITIONING LOAD ESTIMATE (REPRODUCED BY PERMISSION OF CARRIER CORPORATION)

Keller & Gannon
Engineers–Architects

COMPUTATION SHEET

COMPUTED BY JC CASE
CHECKED BY
DATE APR 1992 19
REV. 19

COOLING LOAD
BLDG #G, LAB (15.3-16)

PROJECT 16-199-13
ALS-2ND FLOOR
BLDG 6
SHEET NO. 10 OF 47 SHEETS

Space Used For
Size 20 × 20 = 400 SQ FT × 14 = 5600 CU FT

ITEM	AREA OR QUANTITY	SUN GAIN OR TEMP. DIFF.	FACTOR	BTU/HOUR
SOLAR GAIN–GLASS				
Glass	SQ FT ×		×	
Glass	SQ FT ×		×	
Glass	SQ FT ×		×	
Glass	SQ FT ×		×	
Skylight	SQ FT ×		×	
SOLAR & TRANS. GAIN–WALLS & ROOF				
Wall	SQ FT ×		×	
Wall	SQ FT ×		×	
Wall	SQ FT ×		×	
Wall	SQ FT ×		×	
Roof-Sun	400 SQ FT ×	37	× .05	740
Roof-Shaded	SQ FT ×		×	
TRANS. GAIN–EXCEPT WALLS & ROOF				
All Glass	SQ FT ×		×	
Partition	SQ FT ×		×	
Ceiling	SQ FT ×		×	
Floor	SQ FT ×		×	
Infiltration	CFM ×		× 1.08	
INTERNAL HEAT				
People	6	PEOPLE ×	315	1890
Power	2.5 W/SF ~~HP OR KW~~	×	3,415	3410
Lights	1.0 W/SF ~~WATTS~~	×	3,415	1370
Appliances, Etc.		×		
Additional Heat Gains		×		
		SUB TOTAL		7410
Storage	SQ FT ×	× (–)		
		SUB TOTAL		
Safety Factor	5 %			370
		ROOM SENSIBLE HEAT		7780
SUPPLY DUCT HEAT GAIN	SUPPLY DUCT % + LEAK. LOSS	FAN % + M. P. %		
Outdoor Air	CFM ×	F ×	BF × 1.08	
		EFFECTIVE ROOM SENSIBLE HEAT		
LATENT HEAT				
Infiltration	CFM ×		GR/LB × 0.68	
People	PEOPLE ×			
Steam	LB/HR × 1050			
Appliances, Etc.				
Additional Heat Gains				
Vapor Trans.	SQ × 1/100 ×	GR/LB ×		
		SUB TOTAL		
Safety Factor	%			
		ROOM LATENT HEAT		
SUPPLY DUCT LEAKAGE LOSS		%		
Outdoor Air	CFM ×	GR/LB ×	BF × 0.68	
		EFFECTIVE ROOM LATENT HEAT		
		EFFECTIVE ROOM TOTAL HEAT		
OUTDOOR AIR HEAT				
Sensible:	825 CFM ×	9 F × (1–	0 BF) × 1.08	8020
Latent:	CFM ×	GR/LB × (1–	BF) × 0.68	
RETURN DUCT HEAT GAIN	RETURN DUCT % + LEAK. GAIN	HP % + PUMP	SUB TOTAL DEHUM. & % + PIPE LOSS %	
		GRAND TOTAL HEAT		15 800

Estimate for	LOCAL TIME SUN TIME	Peak Load	LOCAL TIME SUN TIME

Hours of Operation

CONDITIONS	DB	WB	% RH	DP	GR/LB
OUTDOOR (OA)					
ROOM (RM)					
DIFFERENCE					

OUTDOOR AIR

VENTILATION: ____ PEOPLE × ____ CFM/PERSON = ____
____ SQ FT × ____ CFM/SQ FT = ____
CFM VENTILATION

INFILTRATION: SWINGING REVOLVING DOORS ____ PEOPLE × ____ CFM/PERSON = ____
OPEN DOORS ____ DOORS × ____ CFM/DOOR = ____
EXHAUST FAN ____
CRACK ____ FEET × ____ CFM/FT = ____
CFM INFILTRATION

CFM OUTDOOR AIR THRU APPARATUS

APPARATUS DEWPOINT

ESHF: EFFECTIVE SENS HEAT FACTOR = EFFECTIVE ROOM SENS. HEAT / EFFECTIVE ROOM TOTAL HEAT = ____

ADP: INDICATED ADP = ____ F SELECTED ADP = ____ F

DEHUMIDIFIED AIR QUANTITY

TEMP RISE: (1– ____ BF) × (T_{RM} ____ F – T_{ADP} ____ F) = ____ F

DEHUM. CFM: EFFECTIVE ROOM SENS. HEAT / (1.08 × $F_{TEMP. RISE}$) = ____ CFM_{DA}

OUTLET TEMP. DIFF.: ROOM SENS. HEAT / (1.08 × CFM_{DA}) = ____ $F_{(RM-OUTLET\ AIR)}$*

SUPPLY AIR QUANTITY

SUPPLY CFM: 7780 ROOM SENS. HEAT / (1.08 × 20 F DESIRED DIFF) = 360 CFM_{SA}

BYPASS CFM: ____ CFM_{SA} – ____ CFM_{DA} = ____ CFM_{BA}

RESULTING ENT & LVG CONDITIONS AT APPARATUS

EDB: T_{RM} ____ F + (CFM_{DA} / CFM†) × (T_{OA} ____ F – T_{RM} ____ F) = T_{EDB} ____ F

LDB: T_{ADP} ____ F + ____ BF × (T_{EDB} ____ F – T_{ADP} ____ F) = T_{LDB} ____ F

FROM PSYCH. CHART: T_{EWB} ____ F, T_{LWB} ____ F

NOTES

HOOD REQUIREMENT ARE:
1000 CFM
ROOM REQUIREMENTS ARE:
825 CFM O.A
15,800 BTUH

*IF THIS ΔT IS TOO HIGH, DETERMINE SUPPLY CPM FOR DENIED DIFFERENCE BY SUPPLY AIR QUANTITY FORMULA.
†WHEN BYPASSING A MIXTURE OF OUTDOOR AND RETURN AIR, USE SUPPLY CFM. WHEN BYPASSING RETURN AIR ONLY, USE DEHUMIDIFIED CFM.

E-5024

AIR CONDITIONING LOAD ESTIMATE (REPRODUCED BY PERMISSION OF CARRIER CORPORATION)

Keller & Gannon
Engineers–Architects

COMPUTATION SHEET

COMPUTED BY J CASE
CHECKED BY
DATE APR 1992 19
REV. 19

COOLING LOAD
BLDG #6 LAB RMS (16) + (17)

PROJECT 16199 13
ALS 2ND FLOOR
BLDG 6
SHEET NO. 11 OF 47 SHEETS

Space Used For
Size 27 × 20 = 540 SQ FT × 14 = 7560 CU FT

ITEM	AREA OR QUANTITY	SUN GAIN OR TEMP. DIFF.	FACTOR	BTU/HOUR
SOLAR GAIN–GLASS				
Glass	SQ FT ×		×	
Glass	SQ FT ×		×	
Glass	SQ FT ×		×	
Glass	SQ FT ×		×	
Skylight	SQ FT ×		×	
SOLAR & TRANS. GAIN–WALLS & ROOF				
Wall	SQ FT ×		×	
Wall	SQ FT ×		×	
Wall	SQ FT ×		×	
Wall	SQ FT ×		×	
Roof-Sun	540 SQ FT ×	37	× .05	1000
Roof-Shaded	SQ FT ×		×	
TRANS. GAIN–EXCEPT WALLS & ROOF				
All Glass	SQ FT ×		×	
Partition	SQ FT ×		×	
Ceiling	SQ FT ×		×	
Floor	SQ FT ×		×	
Infiltration	CFM ×		× 1.08	
INTERNAL HEAT				
People	6	PEOPLE ×	315	1890
Power	7.5 W/SF	HP OR KW ×	3,413	4610
Lights	1.0 W/SF	WATTS ×	3,413	1840
Appliances, Etc.			×	
Additional Heat Gains			×	
			SUB TOTAL	9340
Storage	SQ FT ×		× (–)	
			SUB TOTAL	
Safety Factor	5 %			470
			ROOM SENSIBLE HEAT	9810
SUPPLY DUCT HEAT GAIN	SUPPLY DUCT % + LEAK. LOSS	FAN % + H. P.	%	
Outdoor Air	CFM ×	F ×	BF × 1.08	
			EFFECTIVE ROOM SENSIBLE HEAT	
LATENT HEAT				
Infiltration	CFM ×		GR/LB × 0.68	
People	PEOPLE ×			
Steam	LB/HR × 1050			
Appliances, Etc.				
Additional Heat Gains				
Vapor Trans.	SQ × 1/100 ×		GR/LB ×	
			SUB TOTAL	
Safety Factor	%			
			ROOM LATENT HEAT	
SUPPLY DUCT LEAKAGE LOSS			%	
Outdoor Air	CFM ×	GR/LB ×	BF × 0.68	
			EFFECTIVE ROOM LATENT HEAT	
			EFFECTIVE ROOM TOTAL HEAT	
OUTDOOR AIR HEAT				
Sensible	1825 CFM ×	9 F × (1–	0 BF) × 1.08	17740
Latent	CFM ×	GR/LB × (1–	BF) × 0.68	
RETURN DUCT HEAT GAIN	RETURN DUCT % + LEAK. GAIN	HP % + PUMP	SUB TOTAL DEHUM. & % + PIPE LOSS %	
			GRAND TOTAL HEAT	27550

Estimate for — LOCAL TIME / SUN TIME
Peak Load — LOCAL TIME / SUN TIME

Hours of Operation

CONDITIONS	DB	WB	% RH	DP	GR/LB
OUTDOOR (OA)	85				
ROOM (RM)	76				
DIFFERENCE	9				

OUTDOOR AIR

VENTILATION: ____ PEOPLE × ____ CFM/PERSON = ____
____ SQ FT × ____ CFM/SQ FT = ____
CFM VENTILATION

INFILTRATION: SWINGING REVOLVING DOORS ____ PEOPLE × ____ CFM/PERSON = ____
OPEN DOORS ____ DOORS × ____ CFM/DOOR = ____
EXHAUST FAN ____
CRACK ____ FEET × ____ CFM/FT = ____
CFM INFILTRATION

CFM OUTDOOR AIR THRU APPARATUS

APPARATUS DEWPOINT

ESHF: EFFECTIVE SENS HEAT FACTOR = EFFECTIVE ROOM SENS. HEAT / EFFECTIVE ROOM TOTAL HEAT = ____

ADP: INDICATED ADP = ____ F SELECTED ADP = ____ F

DEHUMIDIFIED AIR QUANTITY

TEMP RISE: (1– ____ BF) × (T_{RM} ____ F – T_{ADP} ____ F) = ____ F

DEHUM. CFM: EFFECTIVE ROOM SENS. HEAT / 1.08 × $F_{TEMP. RISE}$ = ____ CFM_{OA}

OUTLET TEMP. DIFF.: ROOM SENS. HEAT / 1.08 × CFM_{OA} = ____ F (RM–OUTLET AIR)*

SUPPLY AIR QUANTITY

SUPPLY CFM: 9810 ROOM SENS. HEAT / 1.08 × 20 F DESIRED DIFF = 454 CFM_{SA}

BYPASS CFM: ____ CFM_{SA} – ____ CFM_{OA} = ____ CFM_{BA}

RESULTING ENT & LVG CONDITIONS AT APPARATUS

EDB: T_{RM} ____ F + CFM_{OA} / CFM† × (T_{OA} ____ F – T_{RM} ____ F) = T_{EDB} ____ F

LDB: T_{ADP} ____ F + ____ BF × (T_{EDB} ____ F – T_{ADP} ____ F) = T_{LDB} ____ F

FROM PSYCH. CHART: T_{EWB} ____ F, T_{LWB} ____ F

NOTES

HOOD REQUIREMENTS
2,000 CFM ∴
ROOM REQUIREMENTS ARE:
1,825 CFM
27,550 BTUH

*IF THIS ΔT IS TOO HIGH, DETERMINE SUPPLY CPM FOR DENIED DIFFERENCE BY SUPPLY AIR QUANTITY FORMULA.
†WHEN BYPASSING A MIXTURE OF OUTDOOR AND RETURN AIR, USE SUPPLY CPM. WHEN BYPASSING RETURN AIR ONLY, USE DEHUMIDIFIED CPM.

E-5034

AIR CONDITIONING LOAD ESTIMATE (REPRODUCED BY PERMISSION OF CARRIER CORPORATION)

Keller & Gannon
Engineers-Architects

COMPUTATION SHEET

COMPUTED BY J CASE
CHECKED BY
DATE APR 1992 19
REV. 19

COOLING LOAD
BLDG #6 LAB (WEST)

PROJECT 16-199-13
SHEET NO. 12 OF 47 SHEETS

Space Used For
Size 20 × 26 = 520 SQ FT × 14 = 7280 CU FT

ITEM	AREA OR QUANTITY	SUN GAIN OR TEMP. DIFF.	FACTOR	BTU/HOUR
SOLAR GAIN—GLASS				
Glass	SQ FT ×		×	
Glass	SQ FT ×		×	
Glass	SQ FT ×		×	
Glass	SQ FT ×		×	
Skylight	SQ FT ×		×	
SOLAR & TRANS. GAIN—WALLS & ROOF				
Wall	SQ FT ×		×	
Wall	SQ FT ×		×	
Wall	SQ FT ×		×	
Wall	SQ FT ×		×	
Roof-Sun	520 SQ FT ×	37	× .05	960
Roof-Shaded	SQ FT ×		×	
TRANS. GAIN—EXCEPT WALLS & ROOF				
All Glass	SQ FT ×		×	
Partition	SQ FT ×		×	
Ceiling	SQ FT ×		×	
Floor	SQ FT ×		×	
Infiltration	CFM ×		× 1.08	
INTERNAL HEAT				
People	6	PEOPLE ×	315	1890
Power	2.5 W/SF	HP OR KW ×	3.413	+440
Lights	1.0 W/SF	WATTS ×	3.413	1770
Appliances, Etc.			×	
Additional Heat Gains			×	
		SUB TOTAL		9060
Storage	SQ FT ×		× (–)	
		SUB TOTAL		
Safety Factor	5 %			450
		ROOM SENSIBLE HEAT		9510
SUPPLY DUCT HEAT GAIN	SUPPLY DUCT % + LEAK. LOSS	FAN % + H. P.	%	
Outdoor Air	CFM ×	F ×	BF × 1.08	
		EFFECTIVE ROOM SENSIBLE HEAT		
LATENT HEAT				
Infiltration	CFM ×		GR/LB × 0.68	
People	PEOPLE ×			
Steam	LB/HR × 1050			
Appliances, Etc.				
Additional Heat Gains				
Vapor Trans.	SQ × 1/100 ×		GR/LB ×	
		SUB TOTAL		
Safety Factor	%			
		ROOM LATENT HEAT		
SUPPLY DUCT LEAKAGE LOSS			%	
Outdoor Air	CFM ×	GR/LB ×	BF × 0.68	
		EFFECTIVE ROOM LATENT HEAT		
		EFFECTIVE ROOM TOTAL HEAT		
OUTDOOR AIR HEAT				
Sensible:	175 CFM ×	9 F × (1– 0	BF) × 1.08	15310
Latent:	CFM ×	GR/LB × (1–	BF) × 0.68	
RETURN DUCT HEAT GAIN	RETURN DUCT % + LEAK. GAIN	HP % + PUMP	SUB TOTAL DEHUM. & % + PIPE LOSS %	
		GRAND TOTAL HEAT		24820

Estimate for — LOCAL TIME / SUN TIME
Peak Load — LOCAL TIME / SUN TIME
Hours of Operation

CONDITIONS	DB	WB	% RH	DP	GR/LB
OUTDOOR (OA)	85				
ROOM (RM)	76				
DIFFERENCE	9				

OUTDOOR AIR

VENTILATION: PEOPLE = CFM/PERSON = ; SQ FT = CFM/SQ FT = ; CFM VENTILATION

INFILTRATION: SWINGING REVOLVING DOORS PEOPLE = CFM/PERSON = ; OPEN DOORS DOORS = CFM/DOOR = ; EXHAUST FAN ; CRACK FEET = CFM/FT = ; CFM INFILTRATION

CFM OUTDOOR AIR THRU APPARATUS

APPARATUS DEWPOINT

ESHF: EFFECTIVE SENS HEAT FACTOR = EFFECTIVE ROOM SENS. HEAT / EFFECTIVE ROOM TOTAL HEAT =

ADP: INDICATED ADP = F SELECTED ADP = F

DEHUMIDIFIED AIR QUANTITY

TEMP RISE: (1– BF) = (T_{RM} F – T_{ADP} F) = F

DEHUM. CFM: EFFECTIVE ROOM SENS. HEAT / 1.08 × $F_{TEMP. RISE}$ = CFM_{DA}

OUTLET TEMP. DIFF.: ROOM SENS. HEAT / 1.08 × CFM_{DA} = $F_{(RM-OUTLET AIR)}$*

SUPPLY AIR QUANTITY

SUPPLY CFM: 9510 ROOM SENS. HEAT / 1.08 × 20 F DESIRED DIFF = 440 CFM_{SA}

BYPASS CFM: CFM_{SA} – CFM_{DA} = CFM_{BA}

RESULTING ENT & LVG CONDITIONS AT APPARATUS

EDB: T_{RM} F + (CFM_{DA} / CFM_{SA}) × (T_{OA} F – T_{RM} F) = T_{EDB} F

LDB: T_{ADP} F + BF × (T_{EDB} F – T_{ADP} F) = T_{LDB} F

FROM PSYCH. CHART: T_{EDB} F, T_{LDB} F

NOTES

HOOD REQUIREMENTS ARE:
1,750 CFM
ROOM REQUIREMENTS ARE
1,575 CFM
24,820 BTUH

*IF THIS ΔT IS TOO HIGH, DETERMINE SUPPLY CFM FOR DESIRED DIFFERENCE BY SUPPLY AIR QUANTITY FORMULA.
†WHEN BYPASSING A MIXTURE OF OUTDOOR AND RETURN AIR, USE SUPPLY CFM. WHEN BYPASSING RETURN AIR ONLY, USE DEHUMIDIFIED CFM.

E-5024

AIR CONDITIONING LOAD ESTIMATE (REPRODUCED BY PERMISSION OF CARRIER CORPORATION)

Keller & Gannon
Engineers-Architects

COMPUTATION SHEET

COMPUTED BY J CASE
CHECKED BY
DATE APR 1992 19
REV. 19

COOLING LOAD
BLDG #6 CORRIDOR

PROJECT 16-199-13
SHEET NO. 73 OF 47 SHEETS

Space Used For
Size 6 × 150 = 900 SQ FT × 14 = 12,600 CU FT

ITEM	AREA OR QUANTITY	SUN GAIN OR TEMP. DIFF.	FACTOR	BTU/HOUR
SOLAR GAIN—GLASS				
Glass	SQ FT ×		×	
Glass	SQ FT ×		×	
Glass	SQ FT ×		×	
Glass	SQ FT ×		×	
Skylight	SQ FT ×		×	
SOLAR & TRANS. GAIN—WALLS & ROOF				
Wall	SQ FT ×		×	
Wall	SQ FT ×		×	
Wall	SQ FT ×		×	
Wall	SQ FT ×		×	
Roof-Sun	900 SQ FT ×	37	× .05	1670
Roof-Shaded	SQ FT ×		×	
TRANS. GAIN—EXCEPT WALLS & ROOF				
All Glass	SQ FT ×		×	
Partition	SQ FT ×		×	
Ceiling	SQ FT ×		×	
Floor	SQ FT ×		×	
Infiltration	CFM ×		× 1.08	
INTERNAL HEAT				
People	PEOPLE ×			
Power	HP OR KW ×			
Lights	1.0 W/SF	~~WATTS × 3.4 ×~~	3.413	3070
Appliances, Etc.			×	
Additional Heat Gains			×	
			SUB TOTAL	4740
Storage	SQ FT ×		× (–)	
			SUB TOTAL	
Safety Factor	5 %			240
			ROOM SENSIBLE HEAT	4980
SUPPLY DUCT HEAT GAIN	SUPPLY DUCT % + LEAK. LOSS	FAN % + H. P.	%	
Outdoor Air	CFM ×	F ×	BF × 1.08	
			EFFECTIVE ROOM SENSIBLE HEAT	
LATENT HEAT				
Infiltration	CFM ×		GR/LB × 0.68	
People	PEOPLE ×			
Steam	LB/HR × 1050			
Appliances, Etc.				
Additional Heat Gains				
Vapor Trans.	SQ × 1/100 ×	GR/LB ×		
			SUB TOTAL	
Safety Factor	%			
			ROOM LATENT HEAT	
SUPPLY DUCT LEAKAGE LOSS			%	
Outdoor Air	CFM ×	GR/LB ×	BF × 0.68	
			EFFECTIVE ROOM LATENT HEAT	
			EFFECTIVE ROOM TOTAL HEAT	
OUTDOOR AIR HEAT				
Sensible:	900 CFM ×	9 F × (1–	0 BF) × 1.08	8750
Latent:	CFM ×	GR/LB × (1–	BF) × 0.68	
RETURN DUCT HEAT GAIN	RETURN DUCT % + LEAK. GAIN	HP % + PUMP	SUB TOTAL DEHUM. & % + PIPE LOSS %	
			GRAND TOTAL HEAT	13730

Estimate for — LOCAL TIME / SUN TIME
Peak Load — LOCAL TIME / SUN TIME
Hours of Operation

CONDITIONS	DB	WB	% RH	DP	GR/LB
OUTDOOR (OA)	85				
ROOM (RM)	76				
DIFFERENCE	9				

OUTDOOR AIR

VENTILATION: ____ PEOPLE × ____ CFM/PERSON = ____
____ SQ FT × ____ CFM/SQ FT = ____
CFM VENTILATION

INFILTRATION: SWINGING / REVOLVING DOORS ____ PEOPLE × ____ CFM/PERSON = ____
OPEN DOORS ____ DOORS × ____ CFM/DOOR = ____
EXHAUST FAN ____
CRACK ____ FEET × ____ CFM/FT = ____
CFM INFILTRATION

CFM OUTDOOR AIR THRU APPARATUS

APPARATUS DEWPOINT

ESHF: EFFECTIVE SENS HEAT FACTOR = EFFECTIVE ROOM SENS. HEAT / EFFECTIVE ROOM TOTAL HEAT = ____

ADP: INDICATED ADP = ____ F SELECTED ADP = ____ F

DEHUMIDIFIED AIR QUANTITY

TEMP RISE: (1– ____ BF) × (T_{RM} ____ F – T_{ADP} ____ F) = ____ F

DEHUM. CFM: EFFECTIVE ROOM SENS. HEAT / 1.08 × $F_{TEMP. RISE}$ = ____ CFM_{DA}

OUTLET TEMP. DIFF.: ROOM SENS. HEAT / 1.08 × CFM_{DA} = ____ $F_{(RM-OUTLET AIR)}$*

SUPPLY AIR QUANTITY

SUPPLY CFM: 4980 ROOM SENS. HEAT / 1.08 × 20 F DESIRED DIFF = 230 CFM_{SA}

BYPASS CFM: ____ CFM_{SA} – ____ CFM_{DA} = ____ CFM_{BA}

RESULTING ENT & LVG CONDITIONS AT APPARATUS

EDB: T_{RM} ____ F + (CFM_{OA} / CFM_{MT}) × (T_{OA} ____ F – T_{RM} ____ F) = T_{EDB} ____ F

LDB: T_{ADP} ____ F + ____ BF × (T_{EDB} ____ F – T_{ADP} ____ F) = T_{LDB} ____ F
FROM PSYCH. CHART: T_{EWB} ____ F, T_{LWB} ____ F

NOTES

900 CFM O.A.

13,730 BTUH

*IF THIS ΔT IS TOO HIGH, DETERMINE SUPPLY CFM FOR DESIRED DIFFERENCE BY SUPPLY AIR QUANTITY FORMULA.
WHEN BYPASSING A MIXTURE OF OUTDOOR AND RETURN AIR, USE SUPPLY CFM. WHEN BYPASSING RETURN AIR ONLY, USE DEHUMIDIFIED CFM.

E-5024

AIR CONDITIONING LOAD ESTIMATE (REPRODUCED BY PERMISSION OF CARRIER CORPORATION)

Keller & Gannon
Engineers-Architects

COMPUTATION SHEET

COMPUTED BY EDT
CHECKED BY
DATE DD 1992 19
REV. 19

2-MAN OFFICE
MEZZ. FLR
TYP. FOR ① ② ③

PROJECT LAC-ALS
MEZZ FLR

SHEET NO. 14 OF 47 SHEETS

Space Used For
Size 10 × 16 = 160 SQ FT × 14 = 2240 CU FT

ITEM	AREA OR QUANTITY	SUN GAIN OR TEMP. DIFF.	FACTOR	BTU/HOUR		
SOLAR GAIN—GLASS						
N Glass 2(3×6)	SQ FT ×	38	× 0.74 × 0.8			810
Glass	SQ FT ×		×			
Glass	SQ FT ×		×			
Glass	SQ FT ×		×			
Skylight	SQ FT ×		×			
SOLAR & TRANS. GAIN—WALLS & ROOF						
N Wall (10×14)-(36)	SQ FT ×	19	× 0.07			140
Wall	SQ FT ×		×			
Wall	SQ FT ×		×			
Wall	SQ FT ×		×			
Roof-Sun 160	SQ FT ×	37	× 0.05			300
Roof-Shaded	SQ FT ×		×			
TRANS. GAIN—EXCEPT WALLS & ROOF						
N All Glass 36	SQ FT ×	4	× 1.13 × .8			130
Partition	SQ FT ×		×			
Ceiling	SQ FT ×		×			
Floor	SQ FT ×		×			
Infiltration	CFM ×		× 1.08			
INTERNAL HEAT						
People 2	PEOPLE ×	315				630
Power 400 (1 PC)	~~HP OR KW~~ ×	3.4			1	360
Lights 160 × 2 ~~qty~~	WATTS × 3.4 ×				1	190
Appliances, Etc.			×			
Additional Heat Gains			×			
			SUB TOTAL		4	560
Storage	SQ FT ×		× (–)			
			SUB TOTAL			
Safety Factor	5 %					230
			ROOM SENSIBLE HEAT ■		4	790
SUPPLY DUCT HEAT GAIN	SUPPLY DUCT % + LEAK. LOSS		FAN % + H. P. %			
Outdoor Air	CFM ×	F ×	BF × 1.08			
			EFFECTIVE ROOM SENSIBLE HEAT ■			
LATENT HEAT						
Infiltration	CFM ×		GR/LB × 0.68			
People	PEOPLE ×					
Steam	LB/HR × 1050					
Appliances, Etc.						
Additional Heat Gains						
Vapor Trans.	SQ × 1/100 ×		GR/LB ×			
			SUB TOTAL			
Safety Factor	%					
			ROOM LATENT HEAT			
SUPPLY DUCT LEAKAGE LOSS			%			
Outdoor Air	CFM ×	GR/LB ×	BF × 0.68			
			EFFECTIVE ROOM LATENT HEAT			
			EFFECTIVE ROOM TOTAL HEAT ■			
OUTDOOR AIR HEAT						
Sensible: 30	CFM × 4	F × (1– 0	BF) × 1.08			130
Latent:	CFM ×	GR/LB × (1–	BF) × 0.68			
RETURN DUCT HEAT GAIN	RETURN DUCT % + LEAK. GAIN	HP % + PUMP	SUB TOTAL DEHUM. & % + PIPE LOSS %			
			GRAND TOTAL HEAT ■		4	920

Estimate for LOCAL TIME SUN TIME | Peak Load LOCAL TIME SUN TIME

Hours of Operation

CONDITIONS	DB	WB	% RH	DP	GR/LB
OUTDOOR (OA)	80				
ROOM (RM)	76				
DIFFERENCE	4				

OUTDOOR AIR

VENTILATION: 2 PEOPLE × 15 CFM/PERSON = 30
SQ FT × CFM/SQ FT =
CFM VENTILATION ■ 30

INFILTRATION: SWINGING REVOLVING DOORS PEOPLE × CFM/PERSON =
OPEN DOORS DOORS × CFM/DOOR =
EXHAUST FAN
CRACK FEET × CFM/FT =
CFM INFILTRATION ■

CFM OUTDOOR AIR THRU APPARATUS ■

APPARATUS DEWPOINT

ESHF: EFFECTIVE SENS HEAT FACTOR = EFFECTIVE ROOM SENS. HEAT / EFFECTIVE ROOM TOTAL HEAT =

ADP: INDICATED ADP = F SELECTED ADP = F

DEHUMIDIFIED AIR QUANTITY

TEMP RISE: (1– BF) × (T_{RM} F – T_{ADP} F) = F

DEHUM. CPM: EFFECTIVE ROOM SENS. HEAT / 1.08 × $F_{TEMP. RISE}$ = CFM_{DA}

OUTLET TEMP. DIFF.: ROOM SENS. HEAT / 1.08 × CFM_{DA} = $F_{(RM-OUTLET\ AIR)}$*

SUPPLY AIR QUANTITY

SUPPLY CPM: 4790 ROOM SENS. HEAT / 1.08 × 20 F DESIRED DIFF = 225 CFM_{SA}

BYPASS CPM: CFM_{SA} – CFM_{DA} = CFM_{BA}

RESULTING ENT & LVG CONDITIONS AT APPARATUS

EDB: T_{RM} F + CFM_{OA} / CFM† × (T_{OA} F – T_{RM} F) = T_{EDB} F

LDB: T_{ADP} F + BF × (T_{EDB} F – T_{ADP} F) = T_{LDB} F
FROM PSYCH. CHART: T_{EDB} F, T_{LDB} F

NOTES

SA = 225 CFM
OA = 30 "
TH = 4,920 ΔT/H.

*IF THIS ΔT IS TOO HIGH, DETERMINE SUPPLY CPM FOR DESIRED DIFFERENCE BY SUPPLY AIR QUANTITY FORMULA.
†WHEN BYPASSING A MIXTURE OF OUTDOOR AND RETURN AIR, USE SUPPLY CPM. WHEN BYPASSING RETURN AIR ONLY, USE DEHUMIDIFIED CPM.

E-5024

AIR CONDITIONING LOAD ESTIMATE (REPRODUCED BY PERMISSION OF CARRIER CORPORATION)

Keller & Gannon
Engineers–Architects

2

COMPUTATION SHEET

COMPUTED BY EDT
CHECKED BY
DATE DD 1992 19
REV. 19

DIRECTOR
MEZZ. FLR.

PROJECT LAC-AUS
MEZZ. FLR.

SHEET NO. 15 OF 47 SHEETS

Space Used For
Size 16 × 16 = 256 SQ FT × 14 = 3584 CU FT

ITEM	AREA OR QUANTITY	SUN GAIN OR TEMP. DIFF.	FACTOR	BTU/HOUR
SOLAR GAIN—GLASS				
N Glass 3 (3×6)	SQ FT ×	38	× 0.74 × 0.8	1215
Glass	SQ FT ×		×	
Glass	SQ FT ×		×	
Glass	SQ FT ×		×	
Skylight	SQ FT ×		×	
SOLAR & TRANS. GAIN—WALLS & ROOF				
N Wall (16×14'-59)	SQ FT ×	19	× 0.07	230
Wall	SQ FT ×		×	
Wall	SQ FT ×		×	
Wall	SQ FT ×		×	
Roof-Sun 256	SQ FT ×	37	× 0.05	475
Roof-Shaded	SQ FT ×		×	
TRANS. GAIN—EXCEPT WALLS & ROOF				
All Glass 50	SQ FT ×	4	× 1.13 × 0.8	195
Partition	SQ FT ×		×	
Ceiling	SQ FT ×		×	
Floor	SQ FT ×		×	
Infiltration	CFM ×		× 1.08	
INTERNAL HEAT				
People 6	PEOPLE ×	315		1890
Power	HP OR KW ×			
Lights 256 × 2.0 W/SF	WATTS × 3.4 ×			1745
Appliances, Etc.			×	
Additional Heat Gains			×	
			SUB TOTAL	5730
Storage	SQ FT ×		× (–)	
			SUB TOTAL	
Safety Factor 5	%			290
			ROOM SENSIBLE HEAT	6040
SUPPLY DUCT HEAT GAIN	SUPPLY DUCT % + LEAK. LOSS	FAN % + H. P.	%	
Outdoor Air	CFM ×	F ×	SF × 1.08	
			EFFECTIVE ROOM SENSIBLE HEAT	
LATENT HEAT				
Infiltration	CFM ×		GR/LB × 0.68	
People	PEOPLE ×			
Steam	LB/HR × 1050			
Appliances, Etc.				
Additional Heat Gains				
Vapor Trans.	SQ × 1/100 ×	GR/LB ×		
			SUB TOTAL	
Safety Factor	%			
			ROOM LATENT HEAT	
SUPPLY DUCT LEAKAGE LOSS			%	
Outdoor Air	CFM ×	GR/LB ×	SF × 0.68	
			EFFECTIVE ROOM LATENT HEAT	
			EFFECTIVE ROOM TOTAL HEAT	
OUTDOOR AIR HEAT				
Sensible: 90	CFM × 4	F × (1– 0	SF) × 1.08	390
Latent:	CFM ×	GR/LB × (1–	SF) × 0.68	
RETURN DUCT HEAT GAIN	RETURN DUCT % + LEAK. GAIN	HP % + PUMP	SUB TOTAL DEHUM. & % + PIPE LOSS %	
			GRAND TOTAL HEAT	6430

Estimate for — LOCAL TIME / SUN TIME
Peak Load — LOCAL TIME / SUN TIME

Hours of Operation

CONDITIONS	DB	WB	% RH	DP	GR/LB
OUTDOOR (OA)	80				
ROOM (RM)	76				
DIFFERENCE	4				

OUTDOOR AIR

VENTILATION: 6 PEOPLE × 15 CFM/PERSON = 90
SQ FT × CFM/SQ FT =
CFM VENTILATION 90

INFILTRATION: SWINGING REVOLVING DOORS PEOPLE × CFM/PERSON =
OPEN DOORS DOORS × CFM/DOOR =
EXHAUST FAN
CRACK FEET × CFM/FT =
CFM INFILTRATION

CFM OUTDOOR AIR THRU APPARATUS

APPARATUS DEWPOINT

ESHF: EFFECTIVE SENS HEAT FACTOR = EFFECTIVE ROOM SENS. HEAT / EFFECTIVE ROOM TOTAL HEAT =

ADP: INDICATED ADP = F SELECTED ADP = F

DEHUMIDIFIED AIR QUANTITY

TEMP RISE: (1– SF) × (T_{RM} F – T_{ADP} F) = F

DEHUM. CFM: EFFECTIVE ROOM SENS. HEAT / 1.08 × $F_{TEMP. RISE}$ = CFM_{DA}

OUTLET TEMP. DIFF.: ROOM SENS. HEAT / 1.08 × CFM_{DA} = $F_{(RM-OUTLET AIR)}$*

SUPPLY AIR QUANTITY

SUPPLY CFM: 6040 ROOM SENS. HEAT / 1.08 × 20 F DESIRED DIFF = 280 CFM_{SA}

BYPASS CFM: CFM_{SA} – CFM_{DA} = CFM_{BA}

RESULTING ENT & LVG CONDITIONS AT APPARATUS

EDB: T_{RM} F + (CFM_{OA} / CFM) × (T_{OA} F – T_{RM} F) = T_{EDB} F

LDB: T_{ADP} F + SF × (T_{EDB} F – T_{ADP} F) = T_{LDB} F
FROM PSYCH. CHART: T_{EWB} F, T_{LWB} F

NOTES

SA = 280 CFM
OA = 90 "
TH = 6430 BTUH

*IF THIS ΔT IS TOO HIGH, DETERMINE SUPPLY CFM FOR DESIRED DIFFERENCE BY SUPPLY AIR QUANTITY FORMULA.
†WHEN BYPASSING A MIXTURE OF OUTDOOR AND RETURN AIR, USE SUPPLY CFM. WHEN BYPASSING RETURN AIR ONLY, USE DEHUMIDIFIED CFM.

E-5024

AIR CONDITIONING LOAD ESTIMATE (REPRODUCED BY PERMISSION OF CARRIER CORPORATION)

Keller & Gannon
Engineers-Architects

COMPUTATION SHEET

COMPUTED BY EDT
CHECKED BY
DATE DD 1992 19
REV. 19

SECRETARY
MEZZ. FLR.

PROJECT LSL-ALS
MEZZ. FLR.

SHEET NO. 16 OF 47 SHEETS

Space Used For
Size 10 × 16 = 160 SQ FT × 14 = 224 CU FT

ITEM	AREA OR QUANTITY	SUN GAIN OR TEMP. DIFF.	FACTOR	BTU/HOUR
SOLAR GAIN—GLASS				
N Glass 2(3×6)	SQ FT ×	3.8	× 0.74 × 0.8	810
Glass	SQ FT ×		×	
Glass	SQ FT ×		×	
Glass	SQ FT ×		×	
Skylight	SQ FT ×		×	
SOLAR & TRANS. GAIN—WALLS & ROOF				
N Wall (10×14)-(3×6)	SQ FT ×	19	× 0.07	140
Wall	SQ FT ×		×	
Wall	SQ FT ×		×	
Wall	SQ FT ×		×	
Roof-Sun 160	SQ FT ×	37	× 0.05	300
Roof-Shaded	SQ FT ×		×	
TRANS. GAIN—EXCEPT WALLS & ROOF				
N All Glass 36	SQ FT ×	4	× 1.13 × .8	130
Partition	SQ FT ×		×	
Ceiling	SQ FT ×		×	
Floor	SQ FT ×		×	
Infiltration	CFM ×		× 1.08	
INTERNAL HEAT				
People 2	PEOPLE ×	315		630
Power 400 (1 PC)	~~HP OR KW~~ ×	3.4		1,360
Lights 160 × 2 W/SF	WATTS × 3.4 ×			1,170
Appliances, Etc.			×	
Additional Heat Gains			×	
			SUB TOTAL	4,560
Storage	SQ FT ×		× (–)	
			SUB TOTAL	
Safety Factor 5	%			220
			ROOM SENSIBLE HEAT	4,790
SUPPLY DUCT HEAT GAIN	SUPPLY DUCT % + LEAK. LOSS	FAN % + M. P.	%	
Outdoor Air	CFM ×	F ×	BF × 1.08	
			EFFECTIVE ROOM SENSIBLE HEAT	
LATENT HEAT				
Infiltration	CFM ×		GR/LB × 0.68	
People	PEOPLE ×			
Steam	LB/HR × 1050			
Appliances, Etc.				
Additional Heat Gains				
Vapor Trans.	SQ × 1/100 ×		GR/LB ×	
			SUB TOTAL	
Safety Factor	%			
			ROOM LATENT HEAT	
SUPPLY DUCT LEAKAGE LOSS			%	
Outdoor Air	CFM ×	GR/LB ×	BF × 0.68	
			EFFECTIVE ROOM LATENT HEAT	
			EFFECTIVE ROOM TOTAL HEAT	
OUTDOOR AIR HEAT				
Sensible: 30	CFM × 4	F × (1– 0	BF) × 1.08	130
Latent:	CFM ×	GR/LB × (1–	BF) × 0.68	
RETURN DUCT HEAT GAIN	RETURN DUCT % + LEAK. GAIN	HP % + PUMP	SUB TOTAL DEHUM. & % + PIPE LOSS %	
			GRAND TOTAL HEAT	4,920

Estimate for LOCAL TIME SUN TIME | Peak Load LOCAL TIME SUN TIME

Hours of Operation

CONDITIONS	DB	WB	% RH	DP	GR/LB
OUTDOOR (OA)	80				
ROOM (RM)	76				
DIFFERENCE	14				

OUTDOOR AIR

VENTILATION: 2 PEOPLE × 15 CFM/PERSON = 30
SQ FT × CFM/SQ FT =
CFM VENTILATION

INFILTRATION: SWINGING REVOLVING DOORS PEOPLE × CFM/PERSON =
OPEN DOORS DOORS × CFM/DOOR =
EXHAUST FAN
CRACK FEET × CFM/FT =
CFM INFILTRATION

CFM OUTDOOR AIR THRU APPARATUS

APPARATUS DEWPOINT

ESHF: EFFECTIVE SENS HEAT FACTOR = EFFECTIVE ROOM SENS. HEAT / EFFECTIVE ROOM TOTAL HEAT =

ADP: INDICATED ADP = F SELECTED ADP = F

DEHUMIDIFIED AIR QUANTITY

TEMP RISE: (1– BF) × (T_{RM} F – T_{ADP} F) = F

DEHUM. CFM: EFFECTIVE ROOM SENS. HEAT / 1.08 × $F_{TEMP. RISE}$ = CFM_{DA}

OUTLET TEMP. DIFF.: ROOM SENS. HEAT / 1.08 × CFM_{DA} = $F_{(RM-OUTLET\ AIR)}$*

SUPPLY AIR QUANTITY

SUPPLY CFM: 4790 ROOM SENS. HEAT / 1.08 × 20 F DESIRED DIFF = 225 CFM_{SA}

BYPASS CFM: CFM_{SA} – CFM_{DA} = CFM_{BA}

RESULTING ENT & LVG CONDITIONS AT APPARATUS

EDB: T_{RM} F + (CFM_{DA} / CFM) × (T_{OA} F – T_{RM} F) = T_{EDB} F

LDB: T_{ADP} F + BF × (T_{EDB} F – T_{ADP} F) = T_{LDB} F
FROM PSYCH. CHART: T_{EWB} F, T_{LWB} F

NOTES

SA = 225 CFM
OA = 30 "
TH = 4,920 BTUH

*IF THIS ΔT IS TOO HIGH, DETERMINE SUPPLY CFM FOR DESIRED DIFFERENCE BY SUPPLY AIR QUANTITY FORMULA.
WHEN BYPASSING A MIXTURE OF OUTDOOR AND RETURN AIR, USE SUPPLY CFM. WHEN BYPASSING RETURN AIR ONLY, USE DEHUMIDIFIED CFM.

E-5024

AIR CONDITIONING LOAD ESTIMATE (REPRODUCED BY PERMISSION OF CARRIER CORPORATION)

Keller & Gannon
Engineers-Architects

COMPUTATION SHEET

COMPUTED BY EDT
CHECKED BY
DATE APR 1992 19
REV. 19

DIRECTOR'S CONF, MEZZ. FLR.

PROJECT LAC-ACS MEZZ. FLR.
SHEET NO. 17 OF 47 SHEETS

Space Used For
Size 16 × 16 = 256 SQ FT × 14 = 3584 CU FT

ITEM	AREA OR QUANTITY	SUN GAIN OR TEMP. DIFF.	FACTOR	BTU/HOUR		
SOLAR GAIN—GLASS						
N Glass 3(2×6)	SQ FT ×	3.8	× 0.74 × 0.8		1	215
Glass	SQ FT ×		×			
Glass	SQ FT ×		×			
Glass	SQ FT ×		×			
Skylight	SQ FT ×		×			
SOLAR & TRANS. GAIN—WALLS & ROOF						
N Wall (16×14)-54	SQ FT ×	19	× 0.07			230
Wall	SQ FT ×		×			
Wall	SQ FT ×		×			
Wall	SQ FT ×		×			
Roof-Sun 256	SQ FT ×	37	× 0.05			475
Roof-Shaded	SQ FT ×		×			
TRANS. GAIN—EXCEPT WALLS & ROOF						
All Glass 54	SQ FT ×	4	× 1.13 × 0.8			175
Partition	SQ FT ×		×			
Ceiling	SQ FT ×		×			
Floor	SQ FT ×		×			
Infiltration	CFM ×		× 1.08			
INTERNAL HEAT						
People 11	PEOPLE ×	315			3	465
Power	HP OR KW ×					
Lights 256 × 2W/sf	WATTS × 3.4 ×				1	745
Appliances, Etc.			×			
Additional Heat Gains			×			
			SUB TOTAL		7	325
Storage	SQ FT ×		× (–)			
			SUB TOTAL			
Safety Factor 5	%					370
			ROOM SENSIBLE HEAT		7	695
SUPPLY DUCT HEAT GAIN	SUPPLY DUCT % + LEAK. LOSS	FAN % + H. P.	%			
Outdoor Air	CFM ×	F ×	BF × 1.08			
			EFFECTIVE ROOM SENSIBLE HEAT			
LATENT HEAT						
Infiltration	CFM ×		GR/LB × 0.68			
People	PEOPLE ×					
Steam	LB/HR × 1050					
Appliances, Etc.						
Additional Heat Gains						
Vapor Trans.	SQ × 1/100 ×	GR/LB ×				
			SUB TOTAL			
Safety Factor	%					
			ROOM LATENT HEAT			
SUPPLY DUCT LEAKAGE LOSS			%			
Outdoor Air	CFM ×	GR/LB ×	BF × 0.68			
			EFFECTIVE ROOM LATENT HEAT			
			EFFECTIVE ROOM TOTAL HEAT			
OUTDOOR AIR HEAT						
Sensible: 165	CFM × 4	F × (1– 0	BF) × 1.08			715
Latent:	CFM ×	GR/LB × (1–	BF) × 0.68			
RETURN DUCT HEAT GAIN	RETURN DUCT % + LEAK. GAIN	HP % + PUMP	SUB TOTAL DEHUM. & % + PIPE LOSS %			
			GRAND TOTAL HEAT		8	410

Estimate for LOCAL TIME SUN TIME | Peak Load LOCAL TIME SUN TIME

Hours of Operation

CONDITIONS	DB	WB	% RH	DP	GR/LB
OUTDOOR (OA)	80				
ROOM (RM)	76				
DIFFERENCE	4				

OUTDOOR AIR

VENTILATION: 11 PEOPLE × 15 CFM/PERSON = 165
SQ FT × CFM/SQ FT =
CFM VENTILATION

INFILTRATION: SWINGING REVOLVING DOORS PEOPLE × CFM/PERSON =
OPEN DOORS DOORS × CFM/DOOR =
EXHAUST FAN
CRACK FEET × CFM/FT =
CFM INFILTRATION

CFM OUTDOOR AIR THRU APPARATUS

APPARATUS DEWPOINT

ESHF: EFFECTIVE SENS HEAT FACTOR = EFFECTIVE ROOM SENS. HEAT / EFFECTIVE ROOM TOTAL HEAT =

ADP: INDICATED ADP = F SELECTED ADP = F

DEHUMIDIFIED AIR QUANTITY

TEMP RISE: (1– BF) × (T_{RM} F – T_{ADP} F) = F

DEHUM. CFM: EFFECTIVE ROOM SENS. HEAT / 1.08 × $F_{TEMP. RISE}$ = CFM_{OA}

OUTLET TEMP. DIFF.: ROOM SENS. HEAT / 1.08 × CFM_{OA} = $F_{(RM-OUTLET\ AIR)}$*

SUPPLY AIR QUANTITY

SUPPLY CFM: 7695 ROOM SENS. HEAT / 1.08 × 20 F DESIRED DIFF = 360 CFM_{SA}

BYPASS CFM: CFM_{SA} – CFM_{OA} = CFM_{BA}

RESULTING ENT & LVG CONDITIONS AT APPARATUS

EDB: T_{RM} F + (CFM_{OA} / CFM1) × (T_{OA} F – T_{RM} F) = T_{EDB} F

LDB: T_{ADP} F + BF × (T_{EDB} F – T_{ADP} F) = T_{LDB} F
FROM PSYCH. CHART: T_{EWB} F, T_{LWB} F

NOTES

SA = 360 CFM
OA = 165 "
TH = 8410 BTUH

*IF THIS ΔT IS TOO HIGH, DETERMINE SUPPLY CFM FOR DESIRED DIFFERENCE BY SUPPLY AIR QUANTITY FORMULA.
†WHEN BYPASSING A MIXTURE OF OUTDOOR AND RETURN AIR, USE SUPPLY CFM. WHEN BYPASSING RETURN AIR ONLY, USE DEHUMIDIFIED CFM.

E-5024

AIR CONDITIONING LOAD ESTIMATE (REPRODUCED BY PERMISSION OF CARRIER CORPORATION)

Keller & Gannon
Engineers–Architects

5

COMPUTATION SHEET

COMPUTED BY EDT
CHECKED BY
DATE 1992 19
REV. 19

RECEPTION/EXHIBIT & COMMON
M622. PLR. ②

PROJECT LXL-ALS
M622. PLR.
SHEET NO. 18 OF 47 SHEETS

Space Used For
Size TOTAL AREA = 2344 SQ FT × 14 = 32816 CU FT

ITEM	AREA OR QUANTITY	SUN GAIN OR TEMP. DIFF.	FACTOR	BTU/HOUR	
SOLAR GAIN—GLASS					
N Glass 17(3×6)	SQ FT ×	38	× 0.74 × 0.8	6	885
Glass	SQ FT ×		×		
Glass	SQ FT ×		×		
Glass	SQ FT ×		×		
Skylight	SQ FT ×		×		
SOLAR & TRANS. GAIN—WALLS & ROOF					
N Wall (60×14)-306	SQ FT ×	19	× 0.07		710
Wall	SQ FT ×		×		
Wall	SQ FT ×		×		
Wall	SQ FT ×		×		
Roof-Sun 2344	SQ FT ×	37	× 0.05	4	340
Roof-Shaded	SQ FT ×		×		
TRANS. GAIN—EXCEPT WALLS & ROOF					
All Glass 306	SQ FT ×	4	× 1.13 × 0.8	1	110
Partition	SQ FT ×		×		
Ceiling	SQ FT ×		×		
Floor	SQ FT ×		×		
Infiltration	CFM ×		× 1.08		
INTERNAL HEAT					
People 20	PEOPLE ×	315		6	300
Power	HP OR KW ×				
Lights 2344 × 2W/SF	WATTS × 3.4 ×			15	940
Appliances, Etc.			×		
Additional Heat Gains			×		
			SUB TOTAL	33	285
Storage	SQ FT ×		× (–)		
			SUB TOTAL		
Safety Factor 5	%			1	765
			ROOM SENSIBLE HEAT	37	050
SUPPLY DUCT HEAT GAIN	SUPPLY DUCT % + LEAK. LOSS	FAN % + H. P.	%		
Outdoor Air	CFM ×	F ×	BF × 1.08		
			EFFECTIVE ROOM SENSIBLE HEAT		
LATENT HEAT					
Infiltration	CFM ×		GR/LB × 0.68		
People	PEOPLE ×				
Steam	LB/HR × 1050				
Appliances, Etc.					
Additional Heat Gains					
Vapor Trans.	SQ × 1/100 ×		GR/LB ×		
			SUB TOTAL		
Safety Factor	%				
			ROOM LATENT HEAT		
SUPPLY DUCT LEAKAGE LOSS			%		
Outdoor Air	CFM ×	GR/LB ×	BF × 0.68		
			EFFECTIVE ROOM LATENT HEAT		
			EFFECTIVE ROOM TOTAL HEAT		
OUTDOOR AIR HEAT					
Sensible: 300	CFM × 4	F × (1– 0	BF) × 1.08	1	300
Latent:	CFM ×	GR/LB × (1–	BF) × 0.68		
RETURN DUCT HEAT GAIN	RETURN DUCT % + LEAK. GAIN	HP % + PUMP	SUB TOTAL DEHUM. & % + PIPE LOSS %		
			GRAND TOTAL HEAT	38	350

Estimate for LOCAL TIME SUN TIME | Peak Load LOCAL TIME SUN TIME

Hours of Operation

CONDITIONS	DB	WB	% RH	DP	GR/LB
OUTDOOR (OA)	80				
ROOM (RM)	76				
DIFFERENCE	4				

OUTDOOR AIR

VENTILATION: 20 PEOPLE × 15 CFM/PERSON = 300
SQ FT × CFM/SQ FT =
CFM VENTILATION

INFILTRATION: SWINGING REVOLVING DOORS PEOPLE × CFM/PERSON =
OPEN DOORS DOORS × CFM/DOOR =
EXHAUST FAN
CRACK FEET × CFM/FT =
CFM INFILTRATION

CFM OUTDOOR AIR THRU APPARATUS

APPARATUS DEWPOINT

ESHF: EFFECTIVE SENS HEAT FACTOR = EFFECTIVE ROOM SENS. HEAT / EFFECTIVE ROOM TOTAL HEAT =

ADP: INDICATED ADP = F SELECTED ADP = F

DEHUMIDIFIED AIR QUANTITY

TEMP RISE: (1– BF) × (T_{RM} F – T_{ADP} F) = F

DEHUM. CFM: EFFECTIVE ROOM SENS. HEAT / 1.08 × $F_{TEMP. RISE}$ = CFM_{DA}

OUTLET TEMP. DIFF.: ROOM SENS. HEAT / 1.08 × CFM_{DA} = $F_{(RM-OUTLET AIR)}$*

SUPPLY AIR QUANTITY

SUPPLY CFM: 37,050 ROOM SENS. HEAT / 1.08 × 20 F DESIRED DIFF = 1715 CFM_{SA}

BYPASS CFM: CFM_{SA} – CFM_{DA} = CFM_{BA}

RESULTING ENT & LVG CONDITIONS AT APPARATUS

EDB: T_{RM} F + CFM_{OA} / CFM† × (T_{OA} F – T_{RM} F) = T_{EDB} F

LDB: T_{ADP} F + BF × (T_{EDB} F – T_{ADP} F) = T_{LDB} F

FROM PSYCH. CHART: T_{EDB} F, T_{LDB} F

NOTES

SA = 1715 CFM
OA = 300 "
TH = 38,350 BTUH.

*IF THIS ΔT IS TOO HIGH, DETERMINE SUPPLY CFM FOR DESIRED DIFFERENCE BY SUPPLY AIR QUANTITY FORMULA.
†WHEN BYPASSING A MIXTURE OF OUTDOOR AND RETURN AIR, USE SUPPLY CFM. WHEN BYPASSING RETURN AIR ONLY, USE DEHUMIDIFIED CFM.

E-5024

AIR CONDITIONING LOAD ESTIMATE (REPRODUCED BY PERMISSION OF CARRIER CORPORATION)

Keller & Gannon
Engineers–Architects

COMPUTATION SHEET

COMPUTED BY EDT
CHECKED BY
DATE APR 1992 19
REV. 19

LIBRARY
MG22. FLR.

PROJECT LRL-AUS
MG22. FLR

SHEET NO. 19 OF 47 SHEETS

Space Used For
Size TOTAL AREA = 714 SQ FT × 14 = 10,000 CU FT

ITEM	AREA OR QUANTITY	SUN GAIN OR TEMP. DIFF.	FACTOR	BTU/HOUR
SOLAR GAIN—GLASS				
NE Glass 4(3×6)	SQ FT = 163		0.26×0.8	2445
Glass	SQ FT ×		×	
Glass	SQ FT ×		×	
Glass	SQ FT ×		×	
Skylight	SQ FT ×		×	
SOLAR & TRANS. GAIN—WALLS & ROOF				
NE Wall (24×14)-72	SQ FT × 70		× 0.07	370
Wall	SQ FT ×		×	
Wall	SQ FT ×		×	
Wall	SQ FT ×		×	
Roof-Sun 714	SQ FT × 37		× 0.05	1370
Roof-Shaded	SQ FT ×		×	
TRANS. GAIN—EXCEPT WALLS & ROOF				
All Glass 72	SQ FT × 4		×1.13×0.8	260
Partition	SQ FT ×		×	
Ceiling	SQ FT ×		×	
Floor	SQ FT ×		×	
Infiltration	CFM ×		× 1.08	
INTERNAL HEAT				
People 10	PEOPLE × 315			3150
Power 400 (2 PC)	~~HP OR KW~~ × 2.4			2760
Lights 714 × 2.0	WATTS × 3.4 ×			4855
Appliances, Etc.			×	
Additional Heat Gains			×	
			SUB TOTAL	15170
Storage	SQ FT ×		× (–)	
			SUB TOTAL	
Safety Factor 5	%			760
			ROOM SENSIBLE HEAT	15880
SUPPLY DUCT HEAT GAIN	SUPPLY DUCT % + LEAK. LOSS	FAN % + H. P.	%	
Outdoor Air	CFM ×	F ×	BF × 1.08	
			EFFECTIVE ROOM SENSIBLE HEAT	
LATENT HEAT				
Infiltration	CFM ×		GR/LB × 0.68	
People	PEOPLE ×			
Steam	LB/HR × 1050			
Appliances, Etc.				
Additional Heat Gains				
Vapor Trans.	SQ × 1/100 ×		GR/LB ×	
			SUB TOTAL	
Safety Factor	%			
			ROOM LATENT HEAT	
SUPPLY DUCT LEAKAGE LOSS			%	
Outdoor Air	CFM ×	GR/LB ×	BF × 0.68	
			EFFECTIVE ROOM LATENT HEAT	
			EFFECTIVE ROOM TOTAL HEAT	
OUTDOOR AIR HEAT				
Sensible: 150	CFM × 4	F × (1– 0	BF) × 1.08	650
Latent:	CFM ×	GR/LB × (1–	BF) × 0.68	
RETURN DUCT HEAT GAIN	RETURN DUCT % + LEAK. GAIN	HP % + PUMP	SUB TOTAL DEHUM. & % + PIPE LOSS %	
			GRAND TOTAL HEAT	16530

Estimate for LOCAL TIME SUN TIME | Peak Load LOCAL TIME SUN TIME

Hours of Operation

CONDITIONS	DB	WB	% RH	DP	GR/LB
OUTDOOR (OA)	80				
ROOM (RM)	76				
DIFFERENCE	4				

OUTDOOR AIR

VENTILATION: 10 PEOPLE × 15 CFM/PERSON × 150
SQ FT × CFM/SQ FT ×
CFM VENTILATION

INFILTRATION: SWINGING REVOLVING DOORS PEOPLE × CFM/PERSON ×
OPEN DOORS DOORS × CFM/DOOR ×
EXHAUST FAN
CRACK FEET × CFM/FT ×
CFM INFILTRATION

CFM OUTDOOR AIR THRU APPARATUS

APPARATUS DEWPOINT

ESHF: EFFECTIVE SENS HEAT FACTOR = EFFECTIVE ROOM SENS. HEAT / EFFECTIVE ROOM TOTAL HEAT =

ADP: INDICATED ADP = F SELECTED ADP = F

DEHUMIDIFIED AIR QUANTITY

TEMP RISE: (1– BF) × (T_{RM} F – T_{ADP} F) = F

DEHUM. CPM: EFFECTIVE ROOM SENS. HEAT / 1.08 × $F_{TEMP. RISE}$ = CFM_{DA}

OUTLET TEMP. DIFF.: ROOM SENS. HEAT / 1.08 × CFM_{DA} = F (RM–OUTLET AIR)*

SUPPLY AIR QUANTITY

SUPPLY CPM: 15,880 ROOM SENS. HEAT / 1.08 × 20 F DESIRED DIFF = 735 CFM_{SA}

BYPASS CPM: CFM_{SA} – CFM_{DA} = CFM_{BA}

RESULTING ENT & LVG CONDITIONS AT APPARATUS

EDB: T_{RM} F + (CFM_{OA} / CFM) × (T_{OA} F – T_{RM} F) = T_{EDB} F

LDB: T_{ADP} F + BF × (T_{EDB} F – T_{ADP} F) = T_{LDB} F
FROM PSYCH. CHART: T_{EWB} F, T_{LWB} F

NOTES

SA = 735 CFM
OA = 150 "
TH = 16,530 BTUH

*IF THIS ΔT IS TOO HIGH, DETERMINE SUPPLY CPM FOR DESIRED DIFFERENCE BY SUPPLY AIR QUANTITY FORMULA.
WHEN BYPASSING A MIXTURE OF OUTDOOR AND RETURN AIR, USE SUPPLY CPM.
WHEN BYPASSING RETURN AIR ONLY, USE DEHUMIDIFIED CPM.

E-5024

AIR CONDITIONING LOAD ESTIMATE (REPRODUCED BY PERMISSION OF CARRIER CORPORATION)

Keller & Gannon
Engineers-Architects

1

COMPUTATION SHEET

COMPUTED BY EDT
CHECKED BY
DATE APR. 1992 19
REV. 19

TOILET
MEN-54 WOMEN-6
MEZZ. PUR.

PROJECT CAC-AUS
MEZZ. PUR.
SHEET NO. 20 OF 41 SHEETS

Space Used For
Size TOTAL × AREA = 640 SQ FT × 14 = 8960 CU FT

ITEM	AREA OR QUANTITY	SUN GAIN OR TEMP. DIFF.	FACTOR	BTU/HOUR
SOLAR GAIN—GLASS				
Glass	SQ FT ×		×	
Glass	SQ FT ×		×	
Glass	SQ FT ×		×	
Glass	SQ FT ×		×	
Skylight	SQ FT ×		×	
SOLAR & TRANS. GAIN—WALLS & ROOF				
Wall	SQ FT ×		×	
Wall	SQ FT ×		×	
Wall	SQ FT ×		×	
Wall	SQ FT ×		×	
Roof-Sun	SQ FT ×		×	
Roof-Shaded	SQ FT ×		×	
TRANS. GAIN—EXCEPT WALLS & ROOF				
All Glass	SQ FT ×		×	
Partition	SQ FT ×		×	
Ceiling	SQ FT ×		×	
Floor	SQ FT ×		×	
Infiltration	CFM ×		× 1.08	
INTERNAL HEAT				
People	PEOPLE ×			
Power	HP OR KW ×			
Lights	WATTS × 3.4 ×			
Appliances, Etc.			×	
Additional Heat Gains			×	
			SUB TOTAL	
Storage	SQ FT ×		× (–)	
			SUB TOTAL	
Safety Factor	%			
			ROOM SENSIBLE HEAT	
SUPPLY DUCT HEAT GAIN	SUPPLY DUCT % + LEAK. LOSS	FAN % + H. P.	%	
Outdoor Air	CFM ×	F ×	BF × 1.08	
			EFFECTIVE ROOM SENSIBLE HEAT	
LATENT HEAT				
Infiltration	CFM ×		GR/LB × 0.68	
People	PEOPLE ×			
Steam	LB/HR × 1050			
Appliances, Etc.				
Additional Heat Gains				
Vapor Trans.	SQ × 1/100 ×	GR/LB ×		
			SUB TOTAL	
Safety Factor	%			
			ROOM LATENT HEAT	
SUPPLY DUCT LEAKAGE LOSS			%	
Outdoor Air	CFM ×	GR/LB ×	BF × 0.68	
			EFFECTIVE ROOM LATENT HEAT	
			EFFECTIVE ROOM TOTAL HEAT	
OUTDOOR AIR HEAT				
Sensible:	CFM ×	F × (1–	BF) × 1.08	
Latent:	CFM ×	GR/LB × (1–	BF) × 0.68	
RETURN DUCT HEAT GAIN	RETURN DUCT % + LEAK. GAIN	HP % + PUMP	SUB TOTAL DEHUM. & % + PIPE LOSS %	
			GRAND TOTAL HEAT	

Estimate for — LOCAL TIME / SUN TIME
Peak Load — LOCAL TIME / SUN TIME
Hours of Operation

CONDITIONS	DB	WB	% RH	DP	GR/LB
OUTDOOR (OA)					
ROOM (RM)					
DIFFERENCE					

OUTDOOR AIR

VENTILATION: ____ PEOPLE × ____ CFM/PERSON = ____
____ SQ FT × ____ CFM/SQ FT = ____
CFM VENTILATION

INFILTRATION: SWINGING REVOLVING DOORS ____ PEOPLE × ____ CFM/PERSON = ____
OPEN DOORS ____ DOORS × ____ CFM/DOOR = ____
EXHAUST FAN ____
CRACK ____ FEET × ____ CFM/FT = ____
CFM INFILTRATION

CFM OUTDOOR AIR THRU APPARATUS

APPARATUS DEWPOINT

ESHF: EFFECTIVE SENS HEAT FACTOR = EFFECTIVE ROOM SENS. HEAT / EFFECTIVE ROOM TOTAL HEAT = ____

ADP: INDICATED ADP = ____ F SELECTED ADP = ____ F

DEHUMIDIFIED AIR QUANTITY

TEMP RISE: (1– ____ BF) × (T_{RM} ____ F – T_{ADP} ____ F) = ____ F

DEHUM. CFM: EFFECTIVE ROOM SENS. HEAT / 1.08 × $F_{TEMP. RISE}$ = ____ CFM_{DA}

OUTLET TEMP. DIFF.: ROOM SENS. HEAT / 1.08 × CFM_{DA} = ____ F (RM–OUTLET AIR)*

SUPPLY AIR QUANTITY

SUPPLY CFM: ROOM SENS. HEAT / 1.08 × F DESIRED DIFF = ____ CFM_{SA}

BYPASS CFM: ____ CFM_{SA} – ____ CFM_{DA} = ____ CFM_{BA}

RESULTING ENT & LVG CONDITIONS AT APPARATUS

EDB: T_{RM} ____ F + (CFM_{OA} / CFM_{T}) × (T_{OA} ____ F – T_{RM} ____ F) = T_{EDB} ____ F

LDB: T_{ADP} ____ F + ____ BF × (T_{EDB} ____ F – T_{ADP} ____ F) = T_{LDB} ____ F

FROM PSYCH. CHART: T_{EWB} ____ F, T_{LWB} ____ F

NOTES

A/C = 8 AC PER HOUR

$CFM_{TOTAL} = \frac{8960 \times 8}{60}$

= 1194 OA

= 1200 CFM.

MEN = 600 CFM

WOMEN = 600 "

*IF THIS ΔT IS TOO HIGH, DETERMINE SUPPLY CFM FOR DESIRED DIFFERENCE BY SUPPLY AIR QUANTITY FORMULA.
THEN BYPASSING A MIXTURE OF OUTDOOR AND RETURN AIR, USE SUPPLY CFM. WHEN BYPASSING RETURN AIR ONLY, USE DEHUMIDIFIED CFM.

E-5024

AIR CONDITIONING LOAD ESTIMATE (REPRODUCED BY PERMISSION OF CARRIER CORPORATION)

Keller & Gannon
Engineers–Architects

8

COMPUTATION SHEET

COMPUTED BY EDT
CHECKED BY
DATE APR 1992 19
REV. 19

OPEN OFFICES
MEZZ. FLR.

PROJECT LXL-AUS
MEZZ. FLR.

SHEET NO. 21 OF 47 SHEETS

Space Used For
Size TOTAL AREA = 1000 SQ FT × 14 = 14,000 CU FT

ITEM	AREA OR QUANTITY	SUN GAIN OR TEMP. DIFF.	FACTOR	BTU/HOUR	
SOLAR GAIN—GLASS					
NE Glass 8(3×6)	SQ FT × 163	× 0.24×0.8		4	885
Glass	SQ FT ×	×			
Glass	SQ FT ×	×			
Glass	SQ FT ×	×			
Skylight	SQ FT ×	×			
SOLAR & TRANS. GAIN—WALLS & ROOF					
NE Wall (46×8)-144	SQ FT × 70	× 0.07			700
Wall	SQ FT ×	×			
Wall	SQ FT ×	×			
Wall	SQ FT ×	×			
Roof-Sun 1000	SQ FT × 37	× 0.05		1	850
Roof-Shaded	SQ FT ×	×			
TRANS. GAIN—EXCEPT WALLS & ROOF					
All Glass 144	SQ FT × 4	× 1.13×0.8			520
Partition	SQ FT ×	×			
Ceiling	SQ FT ×	×			
Floor	SQ FT ×	×			
Infiltration	CFM ×	× 1.08			
INTERNAL HEAT					
People 12	PEOPLE × 315			3	780
Power 400 (12 PC)	~~HP OR KW~~ × 3.4			16	320
Lights 1000 × 1.20	WATTS × 3.4 ×			6	800
Appliances, Etc.		×			
Additional Heat Gains		×			
		SUB TOTAL		34	855
Storage	SQ FT ×	× (–)			
		SUB TOTAL			
Safety Factor 5	%			1	745
		ROOM SENSIBLE HEAT		36	600
SUPPLY DUCT HEAT GAIN	SUPPLY DUCT % + LEAK. LOSS	FAN % + H. P.	%		
Outdoor Air	CFM ×	F ×	SF × 1.08		
		EFFECTIVE ROOM SENSIBLE HEAT			
LATENT HEAT					
Infiltration	CFM ×		GR/LB × 0.68		
People	PEOPLE ×				
Steam	LB/HR × 1050				
Appliances, Etc.					
Additional Heat Gains					
Vapor Trans.	SQ × 1/100 ×		GR/LB ×		
		SUB TOTAL			
Safety Factor	%				
		ROOM LATENT HEAT			
SUPPLY DUCT LEAKAGE LOSS		%			
Outdoor Air	CFM ×	GR/LB ×	SF × 0.68		
		EFFECTIVE ROOM LATENT HEAT			
		EFFECTIVE ROOM TOTAL HEAT			
OUTDOOR AIR HEAT					
Sensible: 180	CFM × 4	F × (1– 0	SF) × 1.08		780
Latent:	CFM ×	GR/LB × (1–	SF) × 0.68		
RETURN DUCT HEAT GAIN	RETURN DUCT % + LEAK. GAIN	HP % + PUMP	SUB TOTAL DEHUM. & % + PIPE LOSS %		
		GRAND TOTAL HEAT		37	380

Estimate for LOCAL TIME SUN TIME | Peak Load LOCAL TIME SUN TIME

Hours of Operation

CONDITIONS	DB	WB	% RH	DP	GR/LB
OUTDOOR (OA)	80				
ROOM (RM)	76				
DIFFERENCE	4				

OUTDOOR AIR

VENTILATION: 12 PEOPLE = 15 CFM/PERSON = 180
SQ FT = CFM/SQ FT =
CFM VENTILATION

INFILTRATION: SWINGING REVOLVING DOORS PEOPLE = CFM/PERSON =
OPEN DOORS DOORS = CFM/DOOR =
EXHAUST FAN
CRACK FEET = CFM/FT =
CFM INFILTRATION

CFM OUTDOOR AIR THRU APPARATUS

APPARATUS DEWPOINT

ESHF: EFFECTIVE SENS HEAT FACTOR = EFFECTIVE ROOM SENS. HEAT / EFFECTIVE ROOM TOTAL HEAT =

ADP: INDICATED ADP = F SELECTED ADP = F

DEHUMIDIFIED AIR QUANTITY

TEMP RISE: (1– SF) × (T_{RM} F – T_{ADP} F) = F

DEHUM. CFM: EFFECTIVE ROOM SENS. HEAT / 1.08 × $F_{TEMP. RISE}$ = CFM_{DA}

OUTLET TEMP. DIFF.: ROOM SENS. HEAT / 1.08 × CFM_{DA} = F (RM–OUTLET AIR)*

SUPPLY AIR QUANTITY

SUPPLY CFM: 36,600 ROOM SENS. HEAT / 1.08 × 20 F DESIRED DIFF = 1695 CFM_{SA}

BYPASS CFM: CFM_{SA} – CFM_{DA} = CFM_{BA}

RESULTING ENT & LVG CONDITIONS AT APPARATUS

EDB: T_{RM} F + CFM_{DA} / CFM_{SA} × (T_{OA} F – T_{RM} F) = T_{EDB} F

LDB: T_{ADP} F + SF × (T_{EDB} F – T_{ADP} F) = T_{LDB} F
FROM PSYCH. CHART: T_{EDB} F, T_{LDB} F

NOTES

SA = 1695 CFM
OA = 180 "
TH = 37,380 BTUH

*IF THIS ΔT IS TOO HIGH, DETERMINE SUPPLY CFM FOR DESIRED DIFFERENCE BY SUPPLY AIR QUANTITY FORMULA.
WHEN BYPASSING A MIXTURE OF OUTDOOR AND RETURN AIR, USE SUPPLY CFM. WHEN BYPASSING RETURN AIR ONLY, USE DEHUMIDIFIED CFM.

E-5024

AIR CONDITIONING LOAD ESTIMATE (REPRODUCED BY PERMISSION OF CARRIER CORPORATION)

Keller & Gannon
Engineers-Architects

COMPUTATION SHEET

COMPUTED BY EDT
CHECKED BY
DATE ADD 1992 19
REV. 19

2-MAN OFFICE
MEZZ. FLR.
TYP. FOR (10) (11) (12)

PROJECT LAL-ALS
MEZZ. FLR.
SHEET NO. 22 OF 41 SHEETS

Space Used For
Size 10 × 18 = 180 SQ FT × 14 = 2520 CU FT

ITEM	AREA OR QUANTITY	SUN GAIN OR TEMP. DIFF.	FACTOR	BTU/HOUR
SOLAR GAIN—GLASS				
NE Glass 2(3×6)	SQ FT × 163	× 0.24×0.8		1200
Glass	SQ FT ×	×		
Glass	SQ FT ×	×		
Glass	SQ FT ×	×		
Skylight	SQ FT ×	×		
SOLAR & TRANS. GAIN—WALLS & ROOF				
NE Wall (10×16)-(3×6)	SQ FT × 20	× 0.07		150
Wall	SQ FT ×	×		
Wall	SQ FT ×	×		
Wall	SQ FT ×	×		
Roof-Sun 180	SQ FT × 27	× 0.05		335
Roof-Shaded	SQ FT ×	×		
TRANS. GAIN—EXCEPT WALLS & ROOF				
Wall Glass 36	SQ FT × 4	× 1.2×1.8		130
Partition	SQ FT ×	×		
Ceiling	SQ FT ×	×		
Floor	SQ FT ×	×		
Infiltration	CFM ×	× 1.08		
INTERNAL HEAT				
People 2	PEOPLE × 315			630
Power 400 (1 PC)	~~MR OR~~ KW × 2.6		1	2660
Lights 120×1.25	WATTS × 3.4 ×		1	1225
Appliances, Etc.		×		
Additional Heat Gains		×		
		SUB TOTAL		5030
Storage	SQ FT ×	× (–)		
		SUB TOTAL		
Safety Factor 5	%			255
		ROOM SENSIBLE HEAT		5305
SUPPLY DUCT HEAT GAIN	SUPPLY DUCT % + LEAK. LOSS	FAN % + H. P. %		
Outdoor Air	CFM ×	F ×	BF × 1.08	
		EFFECTIVE ROOM SENSIBLE HEAT		
LATENT HEAT				
Infiltration	CFM ×	GR/LB × 0.68		
People	PEOPLE ×			
Steam	LB/HR × 1050			
Appliances, Etc.				
Additional Heat Gains				
Vapor Trans.	SQ × 1/100 ×	GR/LB ×		
		SUB TOTAL		
Safety Factor	%			
		ROOM LATENT HEAT		
SUPPLY DUCT LEAKAGE LOSS		%		
Outdoor Air	CFM ×	GR/LB ×	BF × 0.68	
		EFFECTIVE ROOM LATENT HEAT		
		EFFECTIVE ROOM TOTAL HEAT		
OUTDOOR AIR HEAT				
Sensible: 30	CFM × 4	F × (1– 0	BF) × 1.08	130
Latent:	CFM ×	GR/LB × (1–	BF) × 0.68	
RETURN DUCT HEAT GAIN	RETURN DUCT % + LEAK. GAIN	HP % + PUMP	SUB TOTAL DEHUM. & % + PIPE LOSS %	
		GRAND TOTAL HEAT		5435

Estimate for LOCAL TIME SUN TIME | Peak Load LOCAL TIME SUN TIME

Hours of Operation

CONDITIONS	DB	WB	% RH	DP	GR/LB
OUTDOOR (OA)	80				
ROOM (RM)	76				
DIFFERENCE	4				

OUTDOOR AIR

VENTILATION: 2 PEOPLE × 15 CFM/PERSON = 30
SQ FT × CFM/SQ FT =
CFM VENTILATION

INFILTRATION: SWINGING REVOLVING DOORS PEOPLE × CFM/PERSON ×
OPEN DOORS DOORS × CFM/DOOR ×
EXHAUST FAN
CRACK FEET × CFM/FT ×
CFM INFILTRATION

CFM OUTDOOR AIR THRU APPARATUS

APPARATUS DEWPOINT

ESHF: EFFECTIVE SENS HEAT FACTOR = EFFECTIVE ROOM SENS. HEAT / EFFECTIVE ROOM TOTAL HEAT =

ADP: INDICATED ADP = F SELECTED ADP = F

DEHUMIDIFIED AIR QUANTITY

TEMP RISE: (1– BF) × (T_{RM} F – T_{ADP} F) × F

DEHUM. CFM: EFFECTIVE ROOM SENS. HEAT / 1.08 × $F_{TEMP. RISE}$ = CFM_{DA}

OUTLET TEMP. DIFF.: ROOM SENS. HEAT / 1.08 × CFM_{DA} = $F_{(RM-OUTLET\ AIR)}$*

SUPPLY AIR QUANTITY

SUPPLY CFM: 5305 ROOM SENS. HEAT / 1.08 × 20 F DESIRED DIFF = 250 CFM_{SA}

BYPASS CFM: CFM_{SA} – CFM_{DA} = CFM_{BA}

RESULTING ENT & LVG CONDITIONS AT APPARATUS

EDB: T_{RM} F + CFM_{OA} / CFM† × (T_{OA} F – T_{RM} F) = T_{EDB} F

LDB: T_{ADP} F + BF × (T_{EDB} F – T_{ADP} F) = T_{LDB} F
FROM PSYCH. CHART: T_{EWB} F, T_{LWB} F

NOTES

SA = 250 CFM
OA = 30 "
TH = 5,435 BTUH.
REVISED (11)
SA = 370 CFM.

*IF THIS ΔT IS TOO HIGH, DETERMINE SUPPLY CFM FOR DESIRED DIFFERENCE BY SUPPLY AIR QUANTITY FORMULA.
†WHEN BYPASSING A MIXTURE OF OUTDOOR AND RETURN AIR, USE SUPPLY CFM. WHEN BYPASSING RETURN AIR ONLY, USE DEHUMIDIFIED CFM.

E-5024

AIR CONDITIONING LOAD ESTIMATE (REPRODUCED BY PERMISSION OF CARRIER CORPORATION)

Keller & Gannon
Engineers-Architects

COMPUTATION SHEET

COMPUTED BY EDT
CHECKED BY
DATE APR 1992 19
REV. 19

TEAM AREA
MEZZ. FLR.

PROJECT UBC-ALS
MEZZ. FLR
SHEET NO. 23 OF 47 SHEETS

Space Used For
Size TOTAL AREA = 286 SQ FT × 14 = 4,004 CU FT

ITEM	AREA OR QUANTITY	SUN GAIN OR TEMP. DIFF.	FACTOR	BTU/HOUR
SOLAR GAIN—GLASS				
E Glass 6(2×6)	SQ FT × 216	× .26×0.8		4,555
Glass	SQ FT ×	×		
Glass	SQ FT ×	×		
Glass	SQ FT ×	×		
Skylight	SQ FT ×	×		
SOLAR & TRANS. GAIN—WALLS & ROOF				
E Wall (10×10)−10	SQ FT × 36	× 0.07		1,140
Wall	SQ FT ×	×		
Wall	SQ FT ×	×		
Wall	SQ FT ×	×		
Roof-Sun 286	SQ FT × 37	× 0.05		530
Roof-Shaded	SQ FT ×	×		
TRANS. GAIN—EXCEPT WALLS & ROOF				
All Glass 108	SQ FT × 4	× 1.13×0.8		395
Partition	SQ FT ×	×		
Ceiling	SQ FT ×	×		
Floor	SQ FT ×	×		
Infiltration	CFM ×	× 1.08		
INTERNAL HEAT				
People 5	PEOPLE × 315			1,575
Power	HP OR KW ×			
Lights 286 × 2.0 W/SF	WATTS × 3.4 ×			1,945
Appliances, Etc.		×		
Additional Heat Gains		×		
		SUB TOTAL		9,910
Storage	SQ FT ×	× (−)		
		SUB TOTAL		
Safety Factor 5	%			510
		ROOM SENSIBLE HEAT		10,940
SUPPLY DUCT HEAT GAIN	SUPPLY DUCT % + LEAK. LOSS	FAN % + H. P. %		
Outdoor Air	CFM ×	F ×	BF × 1.08	
		EFFECTIVE ROOM SENSIBLE HEAT		
LATENT HEAT				
Infiltration	CFM ×	GR/LB × 0.68		
People	PEOPLE ×			
Steam	LB/HR × 1050			
Appliances, Etc.				
Additional Heat Gains				
Vapor Trans.	SQ × 1/100 ×	GR/LB ×		
		SUB TOTAL		
Safety Factor	%			
		ROOM LATENT HEAT		
SUPPLY DUCT LEAKAGE LOSS		%		
Outdoor Air	CFM ×	GR/LB ×	BF × 0.68	
		EFFECTIVE ROOM LATENT HEAT		
		EFFECTIVE ROOM TOTAL HEAT		
OUTDOOR AIR HEAT				
Sensible: 75	CFM × 4	F × (1− 0	BF) × 1.08	325
Latent:	CFM ×	GR/LB × (1−	BF) × 0.68	
RETURN DUCT HEAT GAIN	RETURN DUCT % + LEAK. GAIN	HP − % + PUMP	SUB TOTAL DEHUM. & % + PIPE LOSS %	
		GRAND TOTAL HEAT		11,265

Estimate for — LOCAL TIME SUN TIME
Peak Load — LOCAL TIME SUN TIME
Hours of Operation

CONDITIONS	DB	WB	% RH	DP	GR/LB
OUTDOOR (OA)	80				
ROOM (RM)	76				
DIFFERENCE	4				

OUTDOOR AIR

VENTILATION: 5 PEOPLE × 15 CFM/PERSON = 75
SQ FT × CFM/SQ FT =
CFM VENTILATION

INFILTRATION: SWINGING REVOLVING DOORS PEOPLE × CFM/PERSON =
OPEN DOORS DOORS × CFM/DOOR =
EXHAUST FAN
CRACK FEET × CFM/FT =
CFM INFILTRATION

CFM OUTDOOR AIR THRU APPARATUS

APPARATUS DEWPOINT

ESHF: EFFECTIVE SENS HEAT FACTOR = EFFECTIVE ROOM SENS. HEAT / EFFECTIVE ROOM TOTAL HEAT =

ADP: INDICATED ADP = F SELECTED ADP = F

DEHUMIDIFIED AIR QUANTITY

TEMP RISE: (1− BF) × (T_{RM} F − T_{ADP} F) = F

DEHUM. CPM: EFFECTIVE ROOM SENS. HEAT / 1.08 × $F_{TEMP. RISE}$ = CFM_{DA}

OUTLET TEMP. DIFF.: ROOM SENS. HEAT / 1.08 × CFM_{DA} = $F_{(RM-OUTLET AIR)}$*

SUPPLY AIR QUANTITY

SUPPLY CPM: 10,940 ROOM SENS. HEAT / 1.08 × 20 F DESIRED DIFF = 485 CFM_{SA}

BYPASS CPM: CFM_{SA} − CFM_{DA} = CFM_{BA}

RESULTING ENT & LVG CONDITIONS AT APPARATUS

EDB: T_{RM} F + (CFM_{OA} / CFM) × (T_{OA} F − T_{RM} F) = T_{EDB} F

LDB: T_{ADP} F + BF × (T_{EDB} F − T_{ADP} F) = T_{LDB} F

FROM PSYCH. CHART: T_{EWB} F, T_{LWB} F

NOTES

SA = 485 CFM
OA = 75 "
TH = 11,265 BTUH

*IF THIS ΔT IS TOO HIGH, DETERMINE SUPPLY CPM FOR DESIRED DIFFERENCE BY SUPPLY AIR QUANTITY FORMULA.
WHEN BYPASSING A MIXTURE OF OUTDOOR AND RETURN AIR, USE SUPPLY CPM. WHEN BYPASSING RETURN AIR ONLY, USE DEHUMIDIFIED CPM.

E-5024

AIR CONDITIONING LOAD ESTIMATE (REPRODUCED BY PERMISSION OF CARRIER CORPORATION)

Keller & Gannon
Engineers-Architects

11

COMPUTATION SHEET

COMPUTED BY EDT
CHECKED BY
DATE 19
REV. APR 1992 19

2-MAN OFFICE
MEZZ. OFFICE
TYP. FOR (14) (5) (16)

PROJECT LAL-AUS
MEZZ. FLR.
SHEET NO. 24 OF 47 SHEETS

Space Used For
Size 10 × 15 = 150 SQ FT × 14 = 2100 CU FT

ITEM	AREA OR QUANTITY	SUN GAIN OR TEMP. DIFF.	FACTOR	BTU/HOUR
SOLAR GAIN—GLASS				
E Glass 2(3×6)	SQ FT × 216	×	0.26×0.8	1620
Glass	SQ FT ×	×		
Glass	SQ FT ×	×		
Glass	SQ FT ×	×		
Skylight	SQ FT ×	×		
SOLAR & TRANS. GAIN—WALLS & ROOF				
E Wall (10×19)-36	SQ FT × 36	×	0.07	265
Wall	SQ FT ×	×		
Wall	SQ FT ×	×		
Wall	SQ FT ×	×		
Roof-Sun 150	SQ FT × 37	×	0.05	280
Roof-Shaded	SQ FT ×	×		
TRANS. GAIN—EXCEPT WALLS & ROOF				
All Glass 26	SQ FT × 4	×	1.12×0.8	120
Partition	SQ FT ×	×		
Ceiling	SQ FT ×	×		
Floor	SQ FT ×	×		
Infiltration	CFM ×	×	1.08	
INTERNAL HEAT				
People 2	PEOPLE × 315			630
Power 400 (1 PC)	~~HP OR KW~~ × 3.4			1360
Lights 150×20/ft	WATTS × 3.4 ×			1020
Appliances, Etc.		×		
Additional Heat Gains		×		
		SUB TOTAL		3305
Storage	SQ FT ×	× (–)		
		SUB TOTAL		
Safety Factor 5	%			265
		ROOM SENSIBLE HEAT		3570
SUPPLY DUCT HEAT GAIN	SUPPLY DUCT % + LEAK. LOSS	FAN % + H. P.	%	
Outdoor Air	CFM ×	F ×	BF × 1.08	
		EFFECTIVE ROOM SENSIBLE HEAT		
LATENT HEAT				
Infiltration	CFM ×		GR/LB × 0.68	
People	PEOPLE ×			
Steam	LB/HR × 1050			
Appliances, Etc.				
Additional Heat Gains				
Vapor Trans.	SQ × 1/100 ×	GR/LB ×		
		SUB TOTAL		
Safety Factor	%			
		ROOM LATENT HEAT		
SUPPLY DUCT LEAKAGE LOSS			%	
Outdoor Air	CFM ×	GR/LB ×	BF × 0.68	
		EFFECTIVE ROOM LATENT HEAT		
		EFFECTIVE ROOM TOTAL HEAT		
OUTDOOR AIR HEAT				
Sensible: 30	CFM × 4	F × (1– 0	BF) × 1.08	130
Latent:	CFM ×	GR/LB × (1–	BF) × 0.68	
RETURN DUCT HEAT GAIN	RETURN DUCT % + LEAK. GAIN	HP % + PUMP	SUB TOTAL DEHUM. & % + PIPE LOSS %	
		GRAND TOTAL HEAT		5700

Estimate for LOCAL TIME SUN TIME | Peak Load LOCAL TIME SUN TIME

Hours of Operation

CONDITIONS	DB	WB	% RH	DP	GR/LB
OUTDOOR (OA)	80				
ROOM (RM)	76				
DIFFERENCE	4				

OUTDOOR AIR

VENTILATION: 2 PEOPLE × 15 CFM/PERSON = 30
SQ FT × CFM/SQ FT =
CFM VENTILATION

INFILTRATION: SWINGING REVOLVING DOORS PEOPLE × CFM/PERSON =
OPEN DOORS DOORS × CFM/DOOR =
EXHAUST FAN
CRACK FEET × CFM/FT =
CFM INFILTRATION

CFM OUTDOOR AIR THRU APPARATUS

APPARATUS DEWPOINT

ESHF: EFFECTIVE SENS HEAT FACTOR = EFFECTIVE ROOM SENS. HEAT / EFFECTIVE ROOM TOTAL HEAT =

ADP: INDICATED ADP = F SELECTED ADP = F

DEHUMIDIFIED AIR QUANTITY

TEMP RISE: (1– BF) × (T_{RM} F – T_{ADP} F) = F

DEHUM. CPM: EFFECTIVE ROOM SENS. HEAT / 1.08 × $F_{TEMP. RISE}$ = CFM_{DA}

OUTLET TEMP. DIFF.: ROOM SENS. HEAT / 1.08 × CFM_{DA} = $F_{(RM-OUTLET AIR)}$*

SUPPLY AIR QUANTITY

SUPPLY CPM: 5570 ROOM SENS. HEAT / 1.08 × 20 F DESIRED DIFF = 260 CFM_{SA}

BYPASS CPM: CFM_{SA} – CFM_{DA} = CFM_{BA}

RESULTING ENT & LVG CONDITIONS AT APPARATUS

EDB: T_{RM} F + CFM_{DA} / CFM† × (T_{OA} F – T_{RM} F) = T_{EDB} F

LDB: T_{ADP} F + BF × (T_{EDB} F – T_{ADP} F) = T_{LDB} F
FROM PSYCH. CHART: T_{EWB} F, T_{LWB} F

NOTES

SA = 260 CFM
OA = 30 "
TH = 5,700 BTUH.

*IF THIS ΔT IS TOO HIGH, DETERMINE SUPPLY CPM FOR DESIRED DIFFERENCE BY SUPPLY AIR QUANTITY FORMULA.
†WHEN BYPASSING A MIXTURE OF OUTDOOR AND RETURN AIR, USE SUPPLY CPM. WHEN BYPASSING RETURN AIR ONLY, USE DEHUMIDIFIED CPM.

E-5024

AIR CONDITIONING LOAD ESTIMATE (REPRODUCED BY PERMISSION OF CARRIER CORPORATION)

Keller & Gannon
Engineers–Architects

COMPUTATION SHEET

COMPUTED BY EDT
CHECKED BY
DATE APR 1992 19
REV. 19

OPEN OFFICES
MEZZ. FLR.

PROJECT UAL-AUS
MEZZ. FLR.

SHEET NO. 25 OF 47 SHEETS

Space Used For
Size 15 × 17 = 255 SQ FT × 14 = 3570 CU FT

ITEM	AREA OR QUANTITY	SUN GAIN OR TEMP. DIFF.	FACTOR	BTU/HOUR
SOLAR GAIN–GLASS				
E Glass 3(3×6)	SQ FT ×	216	× 0.24×0.8	2430
Glass	SQ FT ×		×	
Glass	SQ FT ×		×	
Glass	SQ FT ×		×	
Skylight	SQ FT ×		×	
SOLAR & TRANS. GAIN–WALLS & ROOF				
E Wall (17×14)-54	SQ FT ×	36	× 0.07	465
Wall	SQ FT ×		×	
Wall	SQ FT ×		×	
Wall	SQ FT ×		×	
Roof-Sun 255	SQ FT ×	37	× 0.05	475
Roof-Shaded	SQ FT ×		×	
TRANS. GAIN–EXCEPT WALLS & ROOF				
All Glass 54	SQ FT ×	4	× 1.12×0.8	195
Partition	SQ FT ×		×	
Ceiling	SQ FT ×		×	
Floor	SQ FT ×		×	
Infiltration	CFM ×		× 1.08	
INTERNAL HEAT				
People 3	PEOPLE ×	315		945
Power 250 (2 PC)	HP OR KW ×	3.4		4080
Lights 255 × 2 W/SF	WATTS × 3.4 ×			1735
Appliances, Etc.			×	
Additional Heat Gains			×	
			SUB TOTAL	10545
Storage	SQ FT ×		× (–)	
			SUB TOTAL	
Safety Factor 5	%			570
			ROOM SENSIBLE HEAT	10845
SUPPLY DUCT HEAT GAIN	SUPPLY DUCT % + LEAK. LOSS	FAN % + H. P.	%	
Outdoor Air	CFM ×	F ×	BF × 1.08	
			EFFECTIVE ROOM SENSIBLE HEAT	
LATENT HEAT				
Infiltration	CFM ×		GR/LB × 0.68	
People	PEOPLE ×			
Steam	LB/HR × 1050			
Appliances, Etc.				
Additional Heat Gains				
Vapor Trans.	SQ × 1/100 ×		GR/LB ×	
			SUB TOTAL	
Safety Factor	%			
			ROOM LATENT HEAT	
SUPPLY DUCT LEAKAGE LOSS			%	
Outdoor Air	CFM ×	GR/LB ×	BF × 0.68	
			EFFECTIVE ROOM LATENT HEAT	
			EFFECTIVE ROOM TOTAL HEAT	
OUTDOOR AIR HEAT				
Sensible: 45	CFM × 4	F × (1– 0	BF) × 1.08	195
Latent:	CFM ×	GR/LB × (1–	BF) × 0.68	
RETURN DUCT HEAT GAIN	RETURN DUCT % + LEAK. GAIN	HP % + PUMP	SUB TOTAL DEHUM. & % + PIPE LOSS %	
			GRAND TOTAL HEAT	11040

Estimate for	LOCAL TIME / SUN TIME	Peak Load	LOCAL TIME / SUN TIME

Hours of Operation

CONDITIONS	DB	WB	% RH	DP	GR LB
OUTDOOR (OA)	80				
ROOM (RM)	76				
DIFFERENCE	4				

OUTDOOR AIR

VENTILATION: 3 PEOPLE × 15 CFM/PERSON = 45
SQ FT × CFM/SQ FT =
CFM VENTILATION

INFILTRATION: SWINGING REVOLVING DOORS PEOPLE × CFM/PERSON =
OPEN DOORS DOORS × CFM/DOOR =
EXHAUST FAN
CRACK FEET × CFM FT =
CFM INFILTRATION

CFM OUTDOOR AIR THRU APPARATUS

APPARATUS DEWPOINT

ESHF: EFFECTIVE SENS HEAT FACTOR = EFFECTIVE ROOM SENS. HEAT / EFFECTIVE ROOM TOTAL HEAT =

ADP: INDICATED ADP = F SELECTED ADP = F

DEHUMIDIFIED AIR QUANTITY

TEMP RISE: (1– BF) × (T_{RM} F – T_{ADP} F) = F

DEHUM. CFM: EFFECTIVE ROOM SENS. HEAT / 1.08 × $F_{TEMP. RISE}$ = CFM_{DA}

OUTLET TEMP. DIFF.: ROOM SENS. HEAT / 1.08 × CFM_{DA} = $F_{(RM-OUTLET AIR)}$*

SUPPLY AIR QUANTITY

SUPPLY CFM: 10845 ROOM SENS. HEAT / 1.08 × 20 F DESIRED DIFF = 505 CFM_{SA}

BYPASS CFM: CFM_{SA} – CFM_{DA} = CFM_{BA}

RESULTING ENT & LVG CONDITIONS AT APPARATUS

EDB: T_{RM} F + CFM_{OA} / CFMT × (T_{OA} F – T_{RM} F) = T_{EDB} F

LDB: T_{ADP} F + BF × (T_{EDB} F – T_{ADP} F) = T_{LDB} F
FROM PSYCH. CHART: T_{EWB} F, T_{LWB} F

NOTES

SA = 505 CFM
OA = 45 "
TH = 11,040 BTUH.

*IF THIS ΔT IS TOO HIGH, DETERMINE SUPPLY CPM FOR DESIRED DIFFERENCE BY SUPPLY AIR QUANTITY FORMULA.
†WHEN BYPASSING A MIXTURE OF OUTDOOR AND RETURN AIR, USE SUPPLY CPM. WHEN BYPASSING RETURN AIR ONLY, USE DEHUMIDIFIED CPM.

E-5024

AIR CONDITIONING LOAD ESTIMATE (REPRODUCED BY PERMISSION OF CARRIER CORPORATION)

Keller & Gannon
Engineers–Architects

COMPUTATION SHEET

COMPUTED BY: EDT
CHECKED BY:
DATE: APR 1992 19
REV.: 19

OPEN OFFICES
MEZZ. FLR.

PROJECT: UAL - ALS
MEZZ. FLR.

(17) SHEET NO. 26 OF 47 SHEETS

Space Used For
Size 15 × 22 = 330 SQ FT × 14 = CU FT

ITEM	AREA OR QUANTITY	SUN GAIN OR TEMP. DIFF.	FACTOR	BTU/HOUR	
SOLAR GAIN–GLASS					
E Glass 4(E+G)	SQ FT × 216		× 0.24×1.18	3	235
Glass	SQ FT ×		×		
Glass	SQ FT ×		×		
Glass	SQ FT ×		×		
Skylight	SQ FT ×		×		
SOLAR & TRANS. GAIN–WALLS & ROOF					
E Wall (22+16)·72	SQ FT × 36		× 0.09		595
Wall	SQ FT ×		×		
Wall	SQ FT ×		×		
Wall	SQ FT ×		×		
Roof-Sun 330	SQ FT × 37		× 0.05		610
Roof-Shaded	SQ FT ×		×		
TRANS. GAIN–EXCEPT WALLS & ROOF					
E All Glass 72	SQ FT × 4		× 1.13×1.8		260
Partition	SQ FT ×		×		
Ceiling	SQ FT ×		×		
Floor	SQ FT ×		×		
Infiltration	CFM ×		× 1.08		
INTERNAL HEAT					
People 4	PEOPLE × 315			1	260
Power 400 (4PC)	~~HP OR KW~~ × 3.4			5	440
Lights 330×2.0/SF	WATTS × 3.4 ×			2	245
Appliances, Etc.			×		
Additional Heat Gains			×		
			SUB TOTAL	13	645
Storage	SQ FT ×		× (–)		
			SUB TOTAL		
Safety Factor 5	%				685
			ROOM SENSIBLE HEAT ■	14	330
SUPPLY DUCT HEAT GAIN	SUPPLY DUCT % + LEAK. LOSS		FAN % + H. P. %		
Outdoor Air	CFM ×	F ×	BF × 1.08		
			EFFECTIVE ROOM SENSIBLE HEAT ■		
LATENT HEAT					
Infiltration	CFM ×		GR/LB × 0.68		
People	PEOPLE ×				
Steam	LB/HR × 1050				
Appliances, Etc.					
Additional Heat Gains					
Vapor Trans.	SQ × 1/100 ×		GR/LB ×		
			SUB TOTAL		
Safety Factor	%				
			ROOM LATENT HEAT		
SUPPLY DUCT LEAKAGE LOSS			%		
Outdoor Air	CFM ×	GR/LB ×	BF × 0.68		
			EFFECTIVE ROOM LATENT HEAT		
			EFFECTIVE ROOM TOTAL HEAT ■		
OUTDOOR AIR HEAT					
Sensible: 60	CFM × 4	F × (1– 0	BF) × 1.08		260
Latent:	CFM ×	GR/LB × (1–	BF) × 0.68		
RETURN DUCT HEAT GAIN	RETURN DUCT % + LEAK. GAIN	HP % + PUMP	SUB TOTAL DEHUM. & % + PIPE LOSS %		
			GRAND TOTAL HEAT ■	14	590

Estimate for — LOCAL TIME / SUN TIME
Peak Load — LOCAL TIME / SUN TIME
Hours of Operation

CONDITIONS	DB	WB	% RH	DP	GR/LB
OUTDOOR (OA)	80				
ROOM (RM)	76				
DIFFERENCE	4				

OUTDOOR AIR

VENTILATION: 4 PEOPLE × 15 CFM/PERSON = 60
SQ FT × CFM/SQ FT =
CFM VENTILATION ■

INFILTRATION: SWINGING REVOLVING DOORS PEOPLE × CFM/PERSON =
OPEN DOORS DOORS × CFM/DOOR =
EXHAUST FAN
CRACK FEET × CFM/FT =
CFM INFILTRATION ■

CFM OUTDOOR AIR THRU APPARATUS ■

APPARATUS DEWPOINT

ESHF: EFFECTIVE SENS HEAT FACTOR = EFFECTIVE ROOM SENS. HEAT / EFFECTIVE ROOM TOTAL HEAT =
ADP: INDICATED ADP = F SELECTED ADP = F

DEHUMIDIFIED AIR QUANTITY

TEMP RISE: (1– BF) × (T_{RM} F – T_{ADP} F) = F
DEHUM. CFM: EFFECTIVE ROOM SENS. HEAT / 1.08 × $F_{TEMP. RISE}$ = CFM_{DA}
OUTLET TEMP. DIFF.: ROOM SENS. HEAT / 1.08 × CFM_{DA} = $F_{(RM-OUTLET\ AIR)}$

SUPPLY AIR QUANTITY

SUPPLY CFM: 14,330 ROOM SENS. HEAT / 1.08 × 20 F DESIRED DIFF = 665 CFM_{SA}
BYPASS CFM: CFM_{SA} – CFM_{DA} = CFM_{BA}

RESULTING ENT & LVG CONDITIONS AT APPARATUS

EDB: T_{RM} F + CFM_{OA}/CFM† × (T_{OA} F – T_{RM} F) = T_{EDB} F
LDB: T_{ADP} F + BF × (T_{EDB} F – T_{ADP} F) = T_{LDB} F
FROM PSYCH. CHART: T_{EWB} F, T_{LWB} F

NOTES

SA = 665 CFM
OA = 60 "
TH = 14,590 BTUH.

*IF THIS ΔT IS TOO HIGH, DETERMINE SUPPLY CFM FOR DESIRED DIFFERENCE BY SUPPLY AIR QUANTITY FORMULA.
†WHEN BYPASSING A MIXTURE OF OUTDOOR AND RETURN AIR, USE SUPPLY CFM. WHEN BYPASSING RETURN AIR ONLY, USE DEHUMIDIFIED CFM.

E-5024

AIR CONDITIONING LOAD ESTIMATE (REPRODUCED BY PERMISSION OF CARRIER CORPORATION)

Keller & Gannon
Engineers–Architects

COMPUTATION SHEET

COMPUTED BY EDT
CHECKED BY
DATE 19
REV. ADD 1992 19

2-MAN OFFICE
HEZZ. FLR.
TYP. POR (30) (7) (2)

PROJECT LBL-AUS
HEZZ. FLR.
SHEET NO. 27 OF 47 SHEETS

Space Used For
Size 10 × 16 = 160 SQ FT × 18 = 2880 CU FT

ITEM	AREA OR QUANTITY	SUN GAIN OR TEMP. DIFF.	FACTOR	BTU/HOUR
SOLAR GAIN—GLASS				
E Glass 2(2×6)	SQ FT × 24	× 0.24×0.8		1620
Glass	SQ FT ×	×		
Glass	SQ FT ×	×		
Glass	SQ FT ×	×		
Skylight	SQ FT ×	×		
SOLAR & TRANS. GAIN—WALLS & ROOF				
E Wall (10×10)-36	SQ FT × 36	× 1.07		365
Wall	SQ FT ×	×		
Wall	SQ FT ×	×		
Wall	SQ FT ×	×		
Roof-Sun 160	SQ FT × 37	× 0.05		280
Roof-Shaded	SQ FT ×	×		
TRANS. GAIN—EXCEPT WALLS & ROOF				
E All Glass 36	SQ FT × 4	× 1.12×0.8		130
Partition	SQ FT ×	×		
Ceiling	SQ FT ×	×		
Floor	SQ FT ×	×		
Infiltration	CFM ×	× 1.08		
INTERNAL HEAT				
People 2	PEOPLE × 315			630
Power 400 (140)	~~HP OR KW~~ × 3.4			1360
Lights 160×20 E	WATTS × 3.4 ×			1090
Appliances, Etc.		×		
Additional Heat Gains		×		
		SUB TOTAL		5375
Storage	SQ FT ×	× (–)		
		SUB TOTAL		
Safety Factor 5	%			270
		ROOM SENSIBLE HEAT		5645
SUPPLY DUCT HEAT GAIN	SUPPLY DUCT % + LEAK. LOSS	FAN % + H. P. %		
Outdoor Air	CFM ×	F ×	BF × 1.08	
		EFFECTIVE ROOM SENSIBLE HEAT		
LATENT HEAT				
Infiltration	CFM ×		GR/LB × 0.68	
People	PEOPLE ×			
Steam	LB/HR × 1050			
Appliances, Etc.				
Additional Heat Gains				
Vapor Trans.	SQ × 1/100 ×		GR/LB ×	
		SUB TOTAL		
Safety Factor	%			
		ROOM LATENT HEAT		
SUPPLY DUCT LEAKAGE LOSS		%		
Outdoor Air	CFM ×	GR/LB ×	BF × 0.68	
		EFFECTIVE ROOM LATENT HEAT		
		EFFECTIVE ROOM TOTAL HEAT		
OUTDOOR AIR HEAT				
Sensible: 30	CFM × 4	F × (1– 0	BF) × 1.08	130
Latent:	CFM ×	GR/LB × (1–	BF) × 0.68	
RETURN DUCT HEAT GAIN	RETURN DUCT % + LEAK. GAIN	HP % + PUMP	SUB TOTAL DEHUM. & % + PIPE LOSS %	
		GRAND TOTAL HEAT		5775

Estimate for LOCAL TIME SUN TIME | Peak Load LOCAL TIME SUN TIME

Hours of Operation

CONDITIONS	DB	WB	% RH	DP	GR LB
OUTDOOR (OA)	80				
ROOM (RM)	76				
DIFFERENCE	4				

OUTDOOR AIR

VENTILATION: 2 PEOPLE × 15 CFM/PERSON = 30
SQ FT × CFM/SQ FT =
CFM VENTILATION

INFILTRATION: SWINGING REVOLVING DOORS PEOPLE × CFM/PERSON =
OPEN DOORS DOORS × CFM/DOOR =
EXHAUST FAN
CRACK FEET × CFM/FT =
CFM INFILTRATION

CFM OUTDOOR AIR THRU APPARATUS

APPARATUS DEWPOINT

ESHF: EFFECTIVE SENS HEAT FACTOR = EFFECTIVE ROOM SENS. HEAT / EFFECTIVE ROOM TOTAL HEAT =

ADP: INDICATED ADP = F SELECTED ADP = F

DEHUMIDIFIED AIR QUANTITY

TEMP RISE: (1– BF) × (T_{RM} F – T_{ADP} F) = F

DEHUM. CPM: EFFECTIVE ROOM SENS. HEAT / (1.08 × $F_{TEMP. RISE}$) = CFM_{DA}

OUTLET TEMP. DIFF.: ROOM SENS. HEAT / (1.08 × CFM_{DA}) = $F_{(RM-OUTLET\ AIR)}$*

SUPPLY AIR QUANTITY

SUPPLY CPM: 5645 ROOM SENS. HEAT / (1.08 × 19 F DESIRED DIFF) = 265 CFM_{SA}

BYPASS CPM: CFM_{SA} – CFM_{DA} = CFM_{BA}

RESULTING ENT & LVG CONDITIONS AT APPARATUS

EDB: T_{RM} F + (CFM_{OA} / CFM_{SA}) × (T_{OA} F – T_{RM} F) = T_{EDB} F

LDB: T_{ADP} F + BF × (T_{EDB} F – T_{ADP} F) = T_{LDB} F

FROM PSYCH. CHART: T_{EWB} F, T_{LWB} F

NOTES

SA = 265 CFM
OA = 30 "
TH = 5,775 BTUH.

*IF THIS ΔT IS TOO HIGH, DETERMINE SUPPLY CPM FOR DESIRED DIFFERENCE BY SUPPLY AIR QUANTITY FORMULA.
†WHEN BYPASSING A MIXTURE OF OUTDOOR AND RETURN AIR, USE SUPPLY CPM. WHEN BYPASSING RETURN AIR ONLY, USE DEHUMIDIFIED CPM.

E-5024

AIR CONDITIONING LOAD ESTIMATE (REPRODUCED BY PERMISSION OF CARRIER CORPORATION)

Keller & Gannon
Engineers-Architects

COMPUTATION SHEET

COMPUTED BY EDT
CHECKED BY
DATE 19
REV. 1992 19

TEAM AREA
MEZZ. FLR.

PROJECT LAL-ALS
MEZZ. FLR.

SHEET NO. 28 OF 47 SHEETS

Space Used For
Size TOTAL × HEIGHT = 286 SQ FT × 14 = 4004 CU FT

ITEM	AREA OR QUANTITY	SUN GAIN OR TEMP. DIFF.	FACTOR	BTU/HOUR
SOLAR GAIN—GLASS				
E Glass 6(3×6)	SQ FT × 216	×	0.26×0.50	4 855
Glass	SQ FT ×	×		
Glass	SQ FT ×	×		
Glass	SQ FT ×	×		
Skylight	SQ FT ×	×		
SOLAR & TRANS. GAIN—WALLS & ROOF				
E Wall (40×14)-108	SQ FT × 36	×	0.07	1 140
Wall	SQ FT ×	×		
Wall	SQ FT ×	×		
Wall	SQ FT ×	×		
Roof-Sun 286	SQ FT × 37	×	0.05	530
Roof-Shaded	SQ FT ×	×		
TRANS. GAIN—EXCEPT WALLS & ROOF				
All Glass 108	SQ FT × 4	×	1.13×0.2	275
Partition	SQ FT ×	×		
Ceiling	SQ FT ×	×		
Floor	SQ FT ×	×		
Infiltration	CFM ×	×	1.08	
INTERNAL HEAT				
People 5	PEOPLE × 315			1 575
Power	HP OR KW ×			
Lights 286 × 200/1	WATTS × 3.4 ×			1 985
Appliances, Etc.		×		
Additional Heat Gains		×		
		SUB TOTAL		10 440
Storage	SQ FT ×	× (–)		
		SUB TOTAL		
Safety Factor 5	%			525
		ROOM SENSIBLE HEAT		10 965
SUPPLY DUCT HEAT GAIN	SUPPLY DUCT % + LEAK. LOSS	FAN % + H. P.	%	
Outdoor Air	CFM ×	F ×	BF × 1.08	
		EFFECTIVE ROOM SENSIBLE HEAT		
LATENT HEAT				
Infiltration	CFM ×	GR/LB × 0.68		
People	PEOPLE ×			
Steam	LB/HR × 1050			
Appliances, Etc.				
Additional Heat Gains				
Vapor Trans.	SQ × 1/100 ×	GR/LB ×		
		SUB TOTAL		
Safety Factor	%			
		ROOM LATENT HEAT		
SUPPLY DUCT LEAKAGE LOSS			%	
Outdoor Air	CFM ×	GR/LB ×	BF × 0.68	
		EFFECTIVE ROOM LATENT HEAT		
		EFFECTIVE ROOM TOTAL HEAT		
OUTDOOR AIR HEAT				
Sensible: 75	CFM × 4	F × (1– 0	BF) × 1.08	325
Latent:	CFM ×	GR/LB × (1–	BF) × 0.68	
RETURN DUCT HEAT GAIN	RETURN DUCT % + LEAK. GAIN	HP % + PUMP	SUB TOTAL DEHUM. & % + PIPE LOSS %	
		GRAND TOTAL HEAT		11 290

Estimate for LOCAL TIME SUN TIME | Peak Load LOCAL TIME SUN TIME

Hours of Operation

CONDITIONS	DB	WB	% RH	DP	GR/LB
OUTDOOR (OA)	80				
ROOM (RM)	76				
DIFFERENCE	4				

OUTDOOR AIR

VENTILATION: 5 PEOPLE × 15 CFM/PERSON × 75
SQ FT × CFM/SQ FT =
CFM VENTILATION

INFILTRATION: SWINGING REVOLVING DOORS PEOPLE × CFM/PERSON ×
OPEN DOORS DOORS × CFM/DOOR ×
EXHAUST FAN
CRACK FEET × CFM/FT =
CFM INFILTRATION

CFM OUTDOOR AIR THRU APPARATUS

APPARATUS DEWPOINT

ESHF: EFFECTIVE SENS HEAT FACTOR = EFFECTIVE ROOM SENS. HEAT / EFFECTIVE ROOM TOTAL HEAT =

ADP: INDICATED ADP = F SELECTED ADP = F

DEHUMIDIFIED AIR QUANTITY

TEMP RISE: (1– BF) × (T_{RM} F – T_{ADP} F) × F

DEHUM. CFM: EFFECTIVE ROOM SENS. HEAT / (1.08 × $F_{TEMP. RISE}$) = CFM_{DA}

OUTLET TEMP. DIFF.: ROOM SENS. HEAT / (1.08 × CFM_{DA}) = $F_{(RM-OUTLET\ AIR)}$*

SUPPLY AIR QUANTITY

SUPPLY CFM: 10,965 / (1.08 × 20 F DESIRED DIFF) = 510 CFM_{SA}

BYPASS CFM: CFM_{SA} – CFM_{DA} = CFM_{BA}

RESULTING ENT & LVG CONDITIONS AT APPARATUS

EDB: T_{RM} F + (CFM_{OA} / CFM_T) × (T_{OA} F – T_{RM} F) = T_{EDB} F

LDB: T_{ADP} F + BF × (T_{EDB} F – T_{ADP} F) = T_{LDB} F

FROM PSYCH. CHART: T_{EWB} F, T_{LWB} F

NOTES

SA = 510 CFM.
OA = 75 "
TH = 11,290 BTUH.

*IF THIS ΔT IS TOO HIGH, DETERMINE SUPPLY CFM FOR DESIRED DIFFERENCE BY SUPPLY AIR QUANTITY FORMULA.
†WHEN BYPASSING A MIXTURE OF OUTDOOR AND RETURN AIR, USE SUPPLY CFM. WHEN BYPASSING RETURN AIR ONLY, USE DEHUMIDIFIED CFM.

E-5024

AIR CONDITIONING LOAD ESTIMATE (REPRODUCED BY PERMISSION OF CARRIER CORPORATION)

Keller & Gannon
Engineers–Architects

COMPUTATION SHEET

COMPUTED BY EDT
CHECKED BY
DATE APR 1992 19
REV. 19

MAIL ROOM
HE22. FLR.
(25)

PROJECT UAL-AUS
HE22. FLR
SHEET NO. 29 OF 47 SHEETS

Space Used For
Size TOTAL AREA = 408 SQ FT × 14 = 5712 CU FT

ITEM	AREA OR QUANTITY	SUN GAIN OR TEMP. DIFF.	FACTOR	BTU/HOUR
SOLAR GAIN–GLASS				
Glass	SQ FT ×		×	
Glass	SQ FT ×		×	
Glass	SQ FT ×		×	
Glass	SQ FT ×		×	
Skylight	SQ FT ×		×	
SOLAR & TRANS. GAIN–WALLS & ROOF				
Wall	SQ FT ×		×	
Wall	SQ FT ×		×	
Wall	SQ FT ×		×	
Wall	SQ FT ×		×	
Roof-Sun	408 SQ FT ×	37	× 0.05	755
Roof-Shaded	SQ FT ×		×	
TRANS. GAIN–EXCEPT WALLS & ROOF				
All Glass	SQ FT ×		×	
Partition	SQ FT ×		×	
Ceiling	SQ FT ×		×	
Floor	SQ FT ×		×	
Infiltration	CFM ×		× 1.08	
INTERNAL HEAT				
People	4	PEOPLE ×	315	1260
Power	400 (1.75)	~~HP OR KW~~ ×	2.0	1360
Lights	408 × 2.0	WATTS × 3.4 ×		2775
Appliances, Etc.			×	
Additional Heat Gains			×	
			SUB TOTAL	6150
Storage	SQ FT ×		× (–)	
			SUB TOTAL	
Safety Factor	5	%		310
			ROOM SENSIBLE HEAT	6460
SUPPLY DUCT HEAT GAIN	SUPPLY DUCT % + LEAK. LOSS	FAN % + H. P.	%	
Outdoor Air	CFM ×	F ×	BF × 1.08	
			EFFECTIVE ROOM SENSIBLE HEAT	
LATENT HEAT				
Infiltration	CFM ×		GR/LB × 0.68	
People	PEOPLE ×			
Steam	LB/HR × 1050			
Appliances, Etc.				
Additional Heat Gains				
Vapor Trans.	SQ × 1/100 ×	GR/LB ×		
			SUB TOTAL	
Safety Factor	%			
			ROOM LATENT HEAT	
SUPPLY DUCT LEAKAGE LOSS			%	
Outdoor Air	CFM ×	GR/LB ×	BF × 0.68	
			EFFECTIVE ROOM LATENT HEAT	
			EFFECTIVE ROOM TOTAL HEAT	
OUTDOOR AIR HEAT				
Sensible:	60 CFM ×	9 F × (1–	0 BF) × 1.08	585
Latent:	CFM ×	GR/LB × (1–	BF) × 0.68	
RETURN DUCT HEAT GAIN	RETURN DUCT % + LEAK. GAIN	HP % + PUMP	SUB TOTAL DEHUM. & % + PIPE LOSS %	
			GRAND TOTAL HEAT	7045

Estimate for LOCAL TIME / SUN TIME
Peak Load LOCAL TIME / SUN TIME
Hours of Operation

CONDITIONS	DB	WB	% RH	DP	GR/LB
OUTDOOR (OA)	85				
ROOM (RM)	76				
DIFFERENCE	9				

OUTDOOR AIR

VENTILATION: 4 PEOPLE × 15 CFM/PERSON = 60
SQ FT × CFM/SQ FT =
CFM VENTILATION

INFILTRATION: SWINGING REVOLVING DOORS PEOPLE × CFM/PERSON =
OPEN DOORS DOORS × CFM/DOOR =
EXHAUST FAN
CRACK FEET × CFM/FT =
CFM INFILTRATION

CFM OUTDOOR AIR THRU APPARATUS

APPARATUS DEWPOINT

ESHF: EFFECTIVE SENS HEAT FACTOR = EFFECTIVE ROOM SENS. HEAT / EFFECTIVE ROOM TOTAL HEAT =

ADP: INDICATED ADP = F SELECTED ADP = F

DEHUMIDIFIED AIR QUANTITY

TEMP RISE: (1– BF) × (T_{RM} F – T_{ADP} F) = F

DEHUM. CPM: EFFECTIVE ROOM SENS. HEAT / 1.08 × $F_{TEMP.\ RISE}$ = CFM_{DA}

OUTLET TEMP. DIFF.: ROOM SENS. HEAT / 1.08 × CFM_{DA} = $F_{(RM-OUTLET\ AIR)}$*

SUPPLY AIR QUANTITY

SUPPLY CPM: 6460 ROOM SENS. HEAT / 1.08 × 20 F DESIRED DIFF = 300 CFM_{SA}

BYPASS CPM: CFM_{SA} – CFM_{DA} = CFM_{BA}

RESULTING ENT & LVG CONDITIONS AT APPARATUS

EDB: T_{RM} F + CFM_{OA} / CFM! × (T_{OA} F – T_{RM} F) = T_{EDB} F

LDB: T_{ADP} F + BF × (T_{EDB} F – T_{ADP} F) = T_{LDB} F
FROM PSYCH. CHART: T_{EWB} F, T_{LWB} F

NOTES

SA = 300 CFM.
OA = 60 "
TH = 7,045 BTUH.

*IF THIS ΔT IS TOO HIGH, DETERMINE SUPPLY CPM FOR DESIRED DIFFERENCE BY SUPPLY AIR QUANTITY FORMULA.
WHEN BYPASSING A MIXTURE OF OUTDOOR AND RETURN AIR, USE SUPPLY CPM.
WHEN BYPASSING RETURN AIR ONLY, USE DEHUMIDIFIED CPM.

E-5024

AIR CONDITIONING LOAD ESTIMATE (REPRODUCED BY PERMISSION OF CARRIER CORPORATION)

Keller & Gannon
Engineers-Architects

(16)

COMPUTATION SHEET

COMPUTED BY EDT
CHECKED BY
DATE ADG 1992 19
REV. 19

UNASSIGNED
HEAD. FLR.
(22)

PROJECT CAL-ADS
HEAD. FLR
SHEET NO. 30 OF 47 SHEETS

Space Used For
Size 8 × 12 = 96 SQ FT × 14 = 1344 CU FT

ITEM	AREA OR QUANTITY	SUN GAIN OR TEMP DIFF	FACTOR	BTU/HOUR
SOLAR GAIN—GLASS				
Glass	SQ FT ×		×	
Glass	SQ FT ×		×	
Glass	SQ FT ×		×	
Glass	SQ FT ×		×	
Skylight	SQ FT ×		×	
SOLAR & TRANS. GAIN—WALLS & ROOF				
Wall	SQ FT ×		×	
Wall	SQ FT ×		×	
Wall	SQ FT ×		×	
Wall	SQ FT ×		×	
Roof-Sun	96 SQ FT ×	37	× 0.05	180
Roof-Shaded	SQ FT ×		×	
TRANS. GAIN—EXCEPT WALLS & ROOF				
All Glass	SQ FT ×		×	
Partition	SQ FT ×		×	
Ceiling	SQ FT ×		×	
Floor	SQ FT ×		×	
Infiltration	CFM ×		× 1.08	
INTERNAL HEAT				
People	1	PEOPLE ×	315	315
Power		HP OR KW ×		
Lights	96 × 2.0 W/SF	WATTS × 3.4 ×		655
Appliances, Etc.			×	
Additional Heat Gains			×	
			SUB TOTAL	1150
Storage	SQ FT ×		× (–)	
			SUB TOTAL	
Safety Factor	5 %			60
			ROOM SENSIBLE HEAT ■	1210
SUPPLY DUCT HEAT GAIN	SUPPLY DUCT % + LEAK. LOSS	FAN % + H. P.	%	
Outdoor Air	CFM ×	F ×	BF × 1.08	
			EFFECTIVE ROOM SENSIBLE HEAT ■	
LATENT HEAT				
Infiltration	CFM ×		GR/LB × 0.68	
People	PEOPLE ×			
Steam	LB/HR × 1050			
Appliances, Etc.				
Additional Heat Gains				
Vapor Trans.	SQ × 1/100 ×		GR/LB ×	
			SUB TOTAL	
Safety Factor	%			
			ROOM LATENT HEAT	
SUPPLY DUCT LEAKAGE LOSS			%	
Outdoor Air	CFM ×	GR/LB ×	BF × 0.68	
			EFFECTIVE ROOM LATENT HEAT	
			EFFECTIVE ROOM TOTAL HEAT ■	
OUTDOOR AIR HEAT				
Sensible:	15 CFM ×	9 F × (1–	0 BF) × 1.08	150
Latent:	CFM ×	GR/LB × (1–	BF) × 0.68	
RETURN DUCT HEAT GAIN	RETURN DUCT % + LEAK. GAIN	HP % + PUMP	SUB TOTAL DEHUM. & % + PIPE LOSS %	
			GRAND TOTAL HEAT ■	1360

Estimate for LOCAL TIME SUN TIME | Peak Load LOCAL TIME SUN TIME

Hours of Operation

CONDITIONS	DB	WB	% RH	DP	GR/LB
OUTDOOR (OA)	85				
ROOM (RM)	76				
DIFFERENCE	9				

OUTDOOR AIR

VENTILATION: 1 PEOPLE × 15 CFM/PERSON = 15
SQ FT × CFM/SQ FT =
CFM VENTILATION ■

INFILTRATION: SWINGING REVOLVING DOORS PEOPLE × CFM/PERSON =
OPEN DOORS DOORS × CFM/DOOR =
EXHAUST FAN
CRACK FEET × CFM/FT =
CFM INFILTRATION ■

CFM OUTDOOR AIR THRU APPARATUS ■

APPARATUS DEWPOINT

ESHF: EFFECTIVE SENS HEAT FACTOR = EFFECTIVE ROOM SENS. HEAT / EFFECTIVE ROOM TOTAL HEAT =

ADP: INDICATED ADP = F SELECTED ADP = F

DEHUMIDIFIED AIR QUANTITY

TEMP RISE: (1– BF) × (T_RM F – T_ADP F) = F

DEHUM. CFM: EFFECTIVE ROOM SENS. HEAT / (1.08 × F_TEMP. RISE) = CFM_DA

OUTLET TEMP. DIFF.: ROOM SENS. HEAT / (1.08 × CFM_DA) = F_(RM–OUTLET AIR)†

SUPPLY AIR QUANTITY

SUPPLY CFM: 1210 ROOM SENS. HEAT / (1.08 × 20 F DESIRED DIFF) = 60 CFM_SA

BYPASS CFM: CFM_SA – CFM_DA = CFM_BA

RESULTING ENT & LVG CONDITIONS AT APPARATUS

EDB: T_RM F + (CFM_OA / CFM†) × (T_OA F – T_RM F) = T_EDB F

LDB: T_ADP F + BF × (T_EDB F – T_ADP F) = T_LDB F

FROM PSYCH. CHART: T_EDB F, T_LDB F

NOTES

SA = 60 CFM
OA = 15 "
TH = 1360 BTUH.

*IF THIS ΔT IS TOO HIGH, DETERMINE SUPPLY CFM FOR DESIRED DIFFERENCE BY SUPPLY AIR QUANTITY FORMULA.
†WHEN BYPASSING A MIXTURE OF OUTDOOR AND RETURN AIR, USE SUPPLY CFM. WHEN BYPASSING RETURN AIR ONLY, USE DEHUMIDIFIED CFM.

E-5024

AIR CONDITIONING LOAD ESTIMATE (REPRODUCED BY PERMISSION OF CARRIER CORPORATION)

Keller & Gannon
Engineers-Architects

17

COMPUTATION SHEET

COMPUTED BY EDT
CHECKED BY
DATE APR 1992 19
REV. 19

OPEN OFFICE
MEZZ. FLR

(27)

PROJECT LAL-AUS
MEZZ. FLR.

SHEET NO. 31 OF 47 SHEETS

Space Used For
Size TOTAL AREA = 221 SQ FT × 14 = 3094 CU FT

ITEM	AREA OR QUANTITY	SUN GAIN OR TEMP. DIFF.	FACTOR	BTU/HOUR
SOLAR GAIN—GLASS				
Glass	SQ FT ×	×		
Glass	SQ FT ×	×		
Glass	SQ FT ×	×		
Glass	SQ FT ×	×		
Skylight	SQ FT ×	×		
SOLAR & TRANS. GAIN—WALLS & ROOF				
Wall	SQ FT ×	×		
Wall	SQ FT ×	×		
Wall	SQ FT ×	×		
Wall	SQ FT ×	×		
Roof-Sun	221 SQ FT ×	37 ×	1.05	410
Roof-Shaded	SQ FT ×	×		
TRANS. GAIN—EXCEPT WALLS & ROOF				
All Glass	SQ FT ×	×		
Partition	SQ FT ×	×		
Ceiling	SQ FT ×	×		
Floor	SQ FT ×	×		
Infiltration	CFM ×	× 1.08		
INTERNAL HEAT				
People	3 PEOPLE ×	315		945
Power	400 (= HP) HP OR KW ×	3.4		4 080
Lights	221 × 2.0 WATTS ×	3.4 ×		1 505
Appliances, Etc.		×		
Additional Heat Gains		×		
		SUB TOTAL		6 940
Storage	SQ FT ×	× (–)		
		SUB TOTAL		
Safety Factor	5 %			350
		ROOM SENSIBLE HEAT		7 290
SUPPLY DUCT HEAT GAIN	SUPPLY DUCT % + LEAK. LOSS	FAN % + H. P.	%	
Outdoor Air	CFM ×	F ×	BF × 1.08	
		EFFECTIVE ROOM SENSIBLE HEAT		
LATENT HEAT				
Infiltration	CFM ×	GR/LB × 0.68		
People	PEOPLE ×			
Steam	LB/HR × 1050			
Appliances, Etc.				
Additional Heat Gains				
Vapor Trans.	SQ × 1/100 ×	GR/LB ×		
		SUB TOTAL		
Safety Factor	%			
		ROOM LATENT HEAT		
SUPPLY DUCT LEAKAGE LOSS		%		
Outdoor Air	CFM ×	GR/LB ×	BF × 0.68	
		EFFECTIVE ROOM LATENT HEAT		
		EFFECTIVE ROOM TOTAL HEAT		
OUTDOOR AIR HEAT				
Sensible:	45 CFM ×	9 F × (1–	0 BF) × 1.08	440
Latent:	CFM ×	GR/LB × (1–	BF) × 0.68	
RETURN DUCT HEAT GAIN	RETURN DUCT % + LEAK. GAIN	HP % + PUMP	SUB TOTAL DEHUM. & % + PIPE LOSS %	
		GRAND TOTAL HEAT		7 730

Estimate for LOCAL TIME SUN TIME | Peak Load LOCAL TIME SUN TIME

Hours of Operation

CONDITIONS	DB	WB	% RH	DP	GR LB
OUTDOOR (OA)	86				
ROOM (RM)	76				
DIFFERENCE	9				

OUTDOOR AIR

VENTILATION: 3 PEOPLE × 15 CFM/PERSON = 45
SQ FT × CFM/SQ FT =
CFM VENTILATION

INFILTRATION: SWINGING REVOLVING DOORS PEOPLE × CFM/PERSON =
OPEN DOORS DOORS × CFM/DOOR =
EXHAUST FAN
CRACK FEET × CFM/FT =
CFM INFILTRATION

CFM OUTDOOR AIR THRU APPARATUS

APPARATUS DEWPOINT

ESHF: EFFECTIVE SENS HEAT FACTOR = EFFECTIVE ROOM SENS. HEAT / EFFECTIVE ROOM TOTAL HEAT =

ADP: INDICATED ADP = F SELECTED ADP = F

DEHUMIDIFIED AIR QUANTITY

TEMP RISE: (1– BF) × (T_{RM} F – T_{ADP} F) = F

DEHUM. CPM: EFFECTIVE ROOM SENS. HEAT / 1.08 × $F_{TEMP. RISE}$ = CFM_{DA}

OUTLET TEMP. DIFF.: ROOM SENS. HEAT / 1.08 × CFM_{DA} = $F_{(RM-OUTLET AIR)}$*

SUPPLY AIR QUANTITY

SUPPLY CPM: 7290 ROOM SENS. HEAT / 1.08 × 20 F DESIRED DIFF = 340 CFM_{SA}

BYPASS CPM: CFM_{SA} – CFM_{DA} = CFM_{BA}

RESULTING ENT & LVG CONDITIONS AT APPARATUS

EDB: T_{RM} F + (CFM_{OA} / CFM_T) × (T_{OA} F – T_{RM} F) = T_{EDB} F

LDB: T_{ADP} F + BF × (T_{EDB} F – T_{ADP} F) = T_{LDB} F
FROM PSYCH. CHART: T_{EWB} F, T_{LWB} F

NOTES

SA = 340 CFM.
OA = 45 "
TH = 7730 BTUH.

*IF THIS ΔT IS TOO HIGH, DETERMINE SUPPLY CPM FOR DESIRED DIFFERENCE BY SUPPLY AIR QUANTITY FORMULA.
†WHEN BYPASSING A MIXTURE OF OUTDOOR AND RETURN AIR, USE SUPPLY CPM. WHEN BYPASSING RETURN AIR ONLY, USE DEHUMIDIFIED CPM.

E-5024

AIR CONDITIONING LOAD ESTIMATE (REPRODUCED BY PERMISSION OF CARRIER CORPORATION)

Keller & Gannon
Engineers-Architects

18

COMPUTATION SHEET

COMPUTED BY EDT
CHECKED BY
DATE APR 1992 19
REV. 19

OPEN OFFICE
MEZZ. OFFICE
(78)

PROJECT LBC-AUS
MEZZ. FLR.

SHEET NO. 32 OF 47 SHEETS

Space Used For
Size TOTAL AREA = 221 SQ FT × 14 = 3094 CU FT

ITEM	AREA OR QUANTITY	SUN GAIN OR TEMP. DIFF.	FACTOR	BTU/HOUR
SOLAR GAIN—GLASS				
Glass	SQ FT ×		×	
Glass	SQ FT ×		×	
Glass	SQ FT ×		×	
Glass	SQ FT ×		×	
Skylight	SQ FT ×		×	
SOLAR & TRANS. GAIN—WALLS & ROOF				
Wall	SQ FT ×		×	
Wall	SQ FT ×		×	
Wall	SQ FT ×		×	
Wall	SQ FT ×		×	
Roof-Sun	221 SQ FT ×	37	× 0.05	410
Roof-Shaded	SQ FT ×		×	
TRANS. GAIN—EXCEPT WALLS & ROOF				
All Glass	SQ FT ×		×	
Partition	SQ FT ×		×	
Ceiling	SQ FT ×		×	
Floor	SQ FT ×		×	
Infiltration	CFM ×		× 1.08	
INTERNAL HEAT				
People	4	PEOPLE ×	315	1260
Power	4.0 (4 pc)	~~H.P. OR KW~~	3.0	5440
Lights	2.21 × 2.0	WATTS × 3.4 ×		1505
Appliances, Etc.			×	
Additional Heat Gains			×	
			SUB TOTAL	8615
Storage	SQ FT ×		× (–)	
			SUB TOTAL	
Safety Factor	5 %			435
			ROOM SENSIBLE HEAT	9050
SUPPLY DUCT HEAT GAIN	SUPPLY DUCT % + LEAK. LOSS	FAN % + H. P.	%	
Outdoor Air	CFM ×	F ×	BF × 1.08	
			EFFECTIVE ROOM SENSIBLE HEAT	
LATENT HEAT				
Infiltration	CFM ×		GR/LB × 0.68	
People	PEOPLE ×			
Steam	LB/HR × 1050			
Appliances, Etc.				
Additional Heat Gains				
Vapor Trans.	SQ × 1/100 ×	GR/LB ×		
			SUB TOTAL	
Safety Factor	%			
			ROOM LATENT HEAT	
SUPPLY DUCT LEAKAGE LOSS			%	
Outdoor Air	CFM ×	GR/LB ×	BF × 0.68	
			EFFECTIVE ROOM LATENT HEAT	
			EFFECTIVE ROOM TOTAL HEAT	
OUTDOOR AIR HEAT				
Sensible:	60 CFM ×	9 F × (1–	0 BF) × 1.08	585
Latent:	CFM ×	GR/LB × (1–	BF) × 0.68	
RETURN DUCT HEAT GAIN	RETURN DUCT % + LEAK. GAIN	HP % + PUMP	SUB TOTAL DEHUM. & % + PIPE LOSS %	
			GRAND TOTAL HEAT	9635

Estimate for LOCAL TIME SUN TIME | Peak Load LOCAL TIME SUN TIME

Hours of Operation

CONDITIONS	DB	WB	% RH	DP	GR LB
OUTDOOR (OA)	85				
ROOM (RM)	76				
DIFFERENCE	9				

OUTDOOR AIR

VENTILATION: 4 PEOPLE × 15 CFM/PERSON × 60
SQ FT × CFM/SQ FT =
CFM VENTILATION

INFILTRATION: SWINGING REVOLVING DOORS PEOPLE × CFM/PERSON =
OPEN DOORS DOORS × CFM/DOOR =
EXHAUST FAN
CRACK FEET × CFM/FT =
CFM INFILTRATION

CFM OUTDOOR AIR THRU APPARATUS

APPARATUS DEWPOINT

ESHF: EFFECTIVE SENS HEAT FACTOR = EFFECTIVE ROOM SENS. HEAT / EFFECTIVE ROOM TOTAL HEAT =

ADP: INDICATED ADP = F SELECTED ADP = F

DEHUMIDIFIED AIR QUANTITY

TEMP RISE: (1– BF) × (T_RM F – T_ADP F) = F

DEHUM. CPM: EFFECTIVE ROOM SENS. HEAT / 1.08 × F_TEMP. RISE = CFM_DA

OUTLET TEMP. DIFF.: ROOM SENS. HEAT / 1.08 × CFM_DA = F (RM–OUTLET AIR)*

SUPPLY AIR QUANTITY

SUPPLY CPM: 9050 ROOM SENS. HEAT / 1.08 × 70 F DESIRED DIFF = 470 CFM_SA

BYPASS CPM: CFM_SA – CFM_DA = CFM_BA

RESULTING ENT & LVG CONDITIONS AT APPARATUS

EDB: T_RM F + (CFM_DA / CFM_SA) × (T_DA F – T_RM F) = T_EDB F

LDB: T_ADP F + BF × (T_EDB F – T_ADP F) = T_LDB F
FROM PSYCH. CHART: T_EDB F, T_LDB F

NOTES

SA = 470 CFM.
OA = 60 "
TH = 9,635 BTUH.

*IF THIS ΔT IS TOO HIGH, DETERMINE SUPPLY CPM FOR DESIRED DIFFERENCE BY SUPPLY AIR QUANTITY FORMULA.
†WHEN BYPASSING A MIXTURE OF OUTDOOR AND RETURN AIR, USE SUPPLY CPM. WHEN BYPASSING RETURN AIR ONLY, USE DEHUMIDIFIED CPM.

E-5024

AIR CONDITIONING LOAD ESTIMATE (REPRODUCED BY PERMISSION OF CARRIER CORPORATION)

Keller & Gannon
Engineers–Architects

COMPUTATION SHEET

COMPUTED BY EDT
CHECKED BY
DATE APR 1992 19
REV. 19

STORAGE
MEZZ. FLR.

PROJECT LRC-AUS
MEZZ. FLR.

SHEET NO. 33 OF 47 SHEETS

Space Used For
Size 8 × 14 = 112 SQ FT × 14 = 1568 CU FT

ITEM	AREA OR QUANTITY	SUN GAIN OR TEMP. DIFF.	FACTOR	BTU/HOUR
SOLAR GAIN—GLASS				
Glass	SQ FT ×		×	
Glass	SQ FT ×		×	
Glass	SQ FT ×		×	
Glass	SQ FT ×		×	
Skylight	SQ FT ×		×	
SOLAR & TRANS. GAIN—WALLS & ROOF				
Wall	SQ FT ×		×	
Wall	SQ FT ×		×	
Wall	SQ FT ×		×	
Wall	SQ FT ×		×	
Roof-Sun	SQ FT ×		×	
Roof-Shaded	SQ FT ×		×	
TRANS. GAIN—EXCEPT WALLS & ROOF				
All Glass	SQ FT ×		×	
Partition	SQ FT ×		×	
Ceiling	SQ FT ×		×	
Floor	SQ FT ×		×	
Infiltration	CFM ×		× 1.08	
INTERNAL HEAT				
People	PEOPLE ×			
Power	HP OR KW ×			
Lights	WATTS × 3.4 ×			
Appliances, Etc.			×	
Additional Heat Gains			×	
			SUB TOTAL	
Storage	SQ FT ×		× (–)	
			SUB TOTAL	
Safety Factor	%			
			ROOM SENSIBLE HEAT ■	
SUPPLY DUCT HEAT GAIN	SUPPLY DUCT % + LEAK. LOSS	FAN % + H. P.	%	
Outdoor Air	CFM ×	F ×	BF × 1.08	
			EFFECTIVE ROOM SENSIBLE HEAT ■	
LATENT HEAT				
Infiltration	CFM ×		GR/LB × 0.68	
People	PEOPLE ×			
Steam	LB/HR × 1050			
Appliances, Etc.				
Additional Heat Gains				
Vapor Trans.	SQ × 1/100 ×	GR/LB ×		
			SUB TOTAL	
Safety Factor	%			
			ROOM LATENT HEAT	
SUPPLY DUCT LEAKAGE LOSS			%	
Outdoor Air	CFM ×	GR/LB ×	BF × 0.68	
			EFFECTIVE ROOM LATENT HEAT	
			EFFECTIVE ROOM TOTAL HEAT ■	
OUTDOOR AIR HEAT				
Sensible:	CFM ×	F × (1–	BF) × 1.08	
Latent:	CFM ×	GR/LB × (1–	BF) × 0.68	
RETURN DUCT HEAT GAIN	RETURN DUCT % + LEAK. GAIN	HP % + PUMP	SUB TOTAL DEHUM. & % + PIPE LOSS %	
			GRAND TOTAL HEAT ■	

Estimate for — LOCAL TIME / SUN TIME — Peak Load — LOCAL TIME / SUN TIME

Hours of Operation

CONDITIONS	DB	WB	% RH	DP	GR/LB
OUTDOOR (OA)					
ROOM (RM)					
DIFFERENCE					

OUTDOOR AIR

VENTILATION: ____ PEOPLE × ____ CFM/PERSON = ____
____ SQ FT × ____ CFM/SQ FT = ____
CFM VENTILATION ■

INFILTRATION: SWINGING REVOLVING DOORS ____ PEOPLE × ____ CFM/PERSON = ____
OPEN DOORS ____ DOORS × ____ CFM/DOOR = ____
EXHAUST FAN ____
CRACK ____ FEET × ____ CFM/FT = ____
CFM INFILTRATION ■

CFM OUTDOOR AIR THRU APPARATUS ■

APPARATUS DEWPOINT

ESHF: EFFECTIVE SENS HEAT FACTOR = EFFECTIVE ROOM SENS. HEAT / EFFECTIVE ROOM TOTAL HEAT = ____

ADP: INDICATED ADP = ____ F SELECTED ADP = ____ F

DEHUMIDIFIED AIR QUANTITY

TEMP RISE: (1– ____ BF) × (T_RM ____ F – T_ADP ____ F) = ____ F

DEHUM. CPM: EFFECTIVE ROOM SENS. HEAT / (1.08 × F_TEMP. RISE) = ____ CFM_DA

OUTLET TEMP. DIFF.: ROOM SENS. HEAT / (1.08 × CFM_DA) = ____ F (RM–OUTLET AIR)*

SUPPLY AIR QUANTITY

SUPPLY CPM: ROOM SENS. HEAT / (1.08 × F DESIRED DIFF) = ____ CFM_SA

BYPASS CPM: ____ CFM_SA – ____ CFM_DA = ____ CFM_BA

RESULTING ENT & LVG CONDITIONS AT APPARATUS

EDB: T_RM ____ F + (CFM_DA / CFM_T) × (T_OA ____ F – T_RM ____ F) = T_EDB ____ F

LDB: T_ADP ____ F + ____ BF × (T_EDB ____ F – T_ADP ____ F) = T_LDB ____ F
FROM PSYCH. CHART: T_EWB ____ F, T_LWB ____ F

NOTES

6 AC!

$$CFM = \frac{1568 \times 6\ \text{AC/HR}}{60} = 160\ CFM$$

*IF THIS ΔT IS TOO HIGH, DETERMINE SUPPLY CPM FOR DESIRED DIFFERENCE BY SUPPLY AIR QUANTITY FORMULA.
†WHEN BYPASSING A MIXTURE OF OUTDOOR AND RETURN AIR, USE SUPPLY CPM. WHEN BYPASSING RETURN AIR ONLY, USE DEHUMIDIFIED CPM.

E-5024

AIR CONDITIONING LOAD ESTIMATE (REPRODUCED BY PERMISSION OF CARRIER CORPORATION)

Keller & Gannon
Engineers-Architects

COMPUTATION SHEET

20

COMPUTED BY EDT
CHECKED BY
DATE APR 1992 19__
REV. 19__

FUTURE LAB
MEZZ. FUR.
(30)

PROJECT CAL-AUS
MEZZ. FUR.
SHEET NO. 34 OF 47 SHEETS

Space Used For
Size TOTAL AREA = 496 SQ FT × 19 = 6944 CU FT

ITEM	AREA OR QUANTITY	SUN GAIN OR TEMP. DIFF.	FACTOR	BTU/HOUR
SOLAR GAIN—GLASS				
Glass	SQ FT ×	×		
Glass	SQ FT ×	×		
Glass	SQ FT ×	×		
Glass	SQ FT ×	×		
Skylight	SQ FT ×	×		
SOLAR & TRANS. GAIN—WALLS & ROOF				
Wall	SQ FT ×	×		
Wall	SQ FT ×	×		
Wall	SQ FT ×	×		
Wall	SQ FT ×	×		
Roof-Sun	496 SQ FT ×	37 ×	0.05	920
Roof-Shaded	SQ FT ×	×		
TRANS. GAIN—EXCEPT WALLS & ROOF				
All Glass	SQ FT ×	×		
Partition	SQ FT ×	×		
Ceiling	SQ FT ×	×		
Floor	SQ FT ×	×		
Infiltration	CFM ×	×	1.08	
INTERNAL HEAT				
People	6	PEOPLE ×	315	1890
Power	496 × 2.5 W/ft²	~~HP OR KW~~ ×	3.4	4220
Lights	496 × 2 W/ft²	WATTS × 3.4 ×		3375
Appliances, Etc.		×		
Additional Heat Gains		×		
		SUB TOTAL		10405
Storage	SQ FT ×	× (–)		
		SUB TOTAL		
Safety Factor	5 %			520
		ROOM SENSIBLE HEAT		10925
SUPPLY DUCT HEAT GAIN	SUPPLY DUCT % + LEAK. LOSS	FAN % + H. P.	%	
Outdoor Air	CFM ×	F ×	BF × 1.08	
		EFFECTIVE ROOM SENSIBLE HEAT		
LATENT HEAT				
Infiltration	CFM ×	GR/LB × 0.68		
People	PEOPLE ×			
Steam	LB/HR × 1050			
Appliances, Etc.				
Additional Heat Gains				
Vapor Trans.	SQ × 1/100 ×	GR/LB ×		
		SUB TOTAL		
Safety Factor	%			
		ROOM LATENT HEAT		
SUPPLY DUCT LEAKAGE LOSS		%		
Outdoor Air	CFM ×	GR/LB ×	BF × 0.68	
		EFFECTIVE ROOM LATENT HEAT		
		EFFECTIVE ROOM TOTAL HEAT		
OUTDOOR AIR HEAT				
Sensible:	1825 CFM ×	9 F × (1–	0 BF) × 1.08	17740
Latent:	CFM ×	GR/LB × (1–	BF) × 0.68	
RETURN DUCT HEAT GAIN	RETURN DUCT % + LEAK. GAIN	HP % + PUMP	SUB TOTAL DEHUM. & % + PIPE LOSS %	
		GRAND TOTAL HEAT		28665

Estimate for — LOCAL TIME / SUN TIME
Peak Load — LOCAL TIME / SUN TIME
Hours of Operation

CONDITIONS	DB	WB	% RH	DP	GR/LB
OUTDOOR (OA)	85				
ROOM (RM)	76				
DIFFERENCE	9				

OUTDOOR AIR

VENTILATION: ____ PEOPLE × ____ CFM/PERSON × ____
____ SQ FT × ____ CFM/SQ FT × ____
CFM VENTILATION

INFILTRATION: SWINGING / REVOLVING DOORS ____ PEOPLE × ____ CFM/PERSON × ____
OPEN DOORS ____ DOORS × ____ CFM/DOOR × ____
EXHAUST FAN ____
CRACK ____ FEET × ____ CFM/FT × ____
CFM INFILTRATION

CFM OUTDOOR AIR THRU APPARATUS

APPARATUS DEWPOINT

ESHF: EFFECTIVE SENS HEAT FACTOR = EFFECTIVE ROOM SENS. HEAT / EFFECTIVE ROOM TOTAL HEAT = ____

ADP: INDICATED ADP = ____ F SELECTED ADP = ____ F

DEHUMIDIFIED AIR QUANTITY

TEMP RISE: (1– ____ BF) × (T_{RM} ____ F – T_{ADP} ____ F) = ____ F

DEHUM. CPM: EFFECTIVE ROOM SENS. HEAT / (1.08 × $F_{TEMP.\ RISE}$) = ____ CFM_{DA}

OUTLET TEMP. DIFF.: ROOM SENS. HEAT / (1.08 × CFM_{DA}) = ____ $F_{(RM-OUTLET\ AIR)}$*

SUPPLY AIR QUANTITY

SUPPLY CPM: 10925 ROOM SENS. HEAT / (1.08 × 20 F DESIRED DIFF) = 510 CFM_{SA}

BYPASS CPM: ____ CFM_{SA} – ____ CFM_{DA} = ____ CFM_{BA}

RESULTING ENT & LVG CONDITIONS AT APPARATUS

EDB: T_{RM} ____ F + (CFM_{OA} / $CFM_{\dagger}$) × (T_{OA} ____ F – T_{RM} ____ F) = T_{EDB} ____ F

LDB: T_{ADP} ____ F + ____ BF × (T_{EDB} ____ F – T_{ADP} ____ F) = T_{LDB} ____ F

FROM PSYCH. CHART: T_{EWB} ____ F, T_{LWB} ____ F

NOTES

HOOD REQUIREMENT:
1050 CFM / HOOD
2 HOODS = 1050 × 2 = 2100 CFM
ROOM REQUIREMENT:
1825 CFM
INFILTRATION
175 CFM (CORRIDOR)
TH = 28,665 BTUH.

*IF THIS ΔT IS TOO HIGH, DETERMINE SUPPLY CPM FOR DESIRED DIFFERENCE BY SUPPLY AIR QUANTITY FORMULA.
†WHEN BYPASSING A MIXTURE OF OUTDOOR AND RETURN AIR, USE SUPPLY CPM. WHEN BYPASSING RETURN AIR ONLY, USE DEHUMIDIFIED CPM.

E-5024

AIR CONDITIONING LOAD ESTIMATE (REPRODUCED BY PERMISSION OF CARRIER CORPORATION)

Keller & Gannon
Engineers-Architects

2'

COMPUTATION SHEET

COMPUTED BY EDT
CHECKED BY
DATE APR 1992 19
REV. 19

FUTURE LAB
MEZZ. FLR.
(31)

PROJECT LDL-AUS
MEZZ. FLR.
SHEET NO. 35 OF 47 SHEETS

Space Used For
Size TOTAL AREA = 560 SQ FT × 14 = 7840 CU FT

ITEM	AREA OR QUANTITY	SUN GAIN OR TEMP. DIFF.	FACTOR	BTU/HOUR
SOLAR GAIN—GLASS				
Glass	SQ FT ×		×	
Glass	SQ FT ×		×	
Glass	SQ FT ×		×	
Glass	SQ FT ×		×	
Skylight	SQ FT ×		×	
SOLAR & TRANS. GAIN—WALLS & ROOF				
Wall	SQ FT ×		×	
Wall	SQ FT ×		×	
Wall	SQ FT ×		×	
Wall	SQ FT ×		×	
Roof-Sun	560 SQ FT ×	37	× 0.05	1040
Roof-Shaded	SQ FT ×		×	
TRANS. GAIN—EXCEPT WALLS & ROOF				
All Glass	SQ FT ×		×	
Partition	SQ FT ×		×	
Ceiling	SQ FT ×		×	
Floor	SQ FT ×		×	
Infiltration	CFM ×		× 1.08	
INTERNAL HEAT				
People	6	PEOPLE ×	315	1890
Power	560 × 2.5 W/SF	~~HP OR KW~~	3.4	4760
Lights	560 × 2 W/SF	WATTS × 3.4 ×		3810
Appliances, Etc.			×	
Additional Heat Gains			×	
			SUB TOTAL	11500
Storage	SQ FT ×		× (–)	
			SUB TOTAL	
Safety Factor	5	%		575
			ROOM SENSIBLE HEAT	12075
SUPPLY DUCT HEAT GAIN	SUPPLY DUCT % + LEAK. LOSS	FAN % + H. P.	%	
Outdoor Air	CFM ×	F ×	BF × 1.08	
			EFFECTIVE ROOM SENSIBLE HEAT	
LATENT HEAT				
Infiltration	CFM ×		GR/LB × 0.68	
People	PEOPLE ×			
Steam	LB/HR × 1050			
Appliances, Etc.				
Additional Heat Gains				
Vapor Trans.	SQ × 1/100 ×		GR/LB ×	
			SUB TOTAL	
Safety Factor		%		
			ROOM LATENT HEAT	
SUPPLY DUCT LEAKAGE LOSS			%	
Outdoor Air	CFM ×	GR/LB ×	BF × 0.68	
			EFFECTIVE ROOM LATENT HEAT	
			EFFECTIVE ROOM TOTAL HEAT	
OUTDOOR AIR HEAT				
Sensible:	185 CFM × 9	F × (1– 0	BF) × 1.08	1740
Latent:	CFM ×	GR/LB × (1–	BF) × 0.68	
RETURN DUCT HEAT GAIN	RETURN DUCT % + LEAK. GAIN	HP % + PUMP	SUB TOTAL DEHUM. & % + PIPE LOSS %	
			GRAND TOTAL HEAT	29815

Estimate for LOCAL TIME SUN TIME | Peak Load LOCAL TIME SUN TIME

Hours of Operation

CONDITIONS	DB	WB	% RH	DP	GR LB
OUTDOOR (OA)	85				
ROOM (RM)	76				
DIFFERENCE	9				

OUTDOOR AIR

VENTILATION: ____ PEOPLE × ____ CFM/PERSON = ____
____ SQ FT × ____ CFM/SQ FT = ____
CFM VENTILATION

INFILTRATION: SWINGING REVOLVING DOORS ____ PEOPLE × ____ CFM/PERSON = ____
OPEN DOORS ____ DOORS × ____ CFM/DOOR = ____
EXHAUST FAN ____
CRACK ____ FEET × ____ CFM/FT = ____
CFM INFILTRATION

CFM OUTDOOR AIR THRU APPARATUS

APPARATUS DEWPOINT

ESHF: EFFECTIVE SENS HEAT FACTOR = EFFECTIVE ROOM SENS. HEAT / EFFECTIVE ROOM TOTAL HEAT = ____

ADP: INDICATED ADP = ____ F SELECTED ADP = ____ F

DEHUMIDIFIED AIR QUANTITY

TEMP RISE: (1– ____ BF) × (T_{RM} ____ F – T_{ADP} ____ F) = ____ F

DEHUM. CFM: EFFECTIVE ROOM SENS. HEAT / 1.08 × $F_{TEMP. RISE}$ = ____ CFM_{DA}

OUTLET TEMP. DIFF.: ROOM SENS. HEAT / 1.08 × CFM_{DA} = ____ $F_{(RM-OUTLET\ AIR)}$*

SUPPLY AIR QUANTITY

SUPPLY CFM: 12,075 ROOM SENS. HEAT / 1.08 × 20 F DESIRED DIFF = 560 CFM_{SA}

BYPASS CFM: ____ CFM_{SA} – ____ CFM_{DA} = ____ CFM_{BA}

RESULTING ENT & LVG CONDITIONS AT APPARATUS

EDB: T_{RM} ____ F + CFM_{OA} / CFM† × (T_{OA} ____ F – T_{RM} ____ F) = T_{EDB} ____ F

LDB: T_{ADP} ____ F + ____ BF × (T_{EDB} ____ F – T_{ADP} ____ F) = T_{LDB} ____ F
FROM PSYCH. CHART: T_{EWB} ____ F, T_{LWB} ____ F

NOTES

HOOD REQUIREMENT:
1000 CFM / HOOD
2 HOODS = 1000 × 2 = 2000 CFM
ROOM REQUIREMENT:
1825 CFM
INFILTRATION
175 CFM (CORRIDOR)
TH = 29,815 BTUH.

*IF THIS ΔT IS TOO HIGH, DETERMINE SUPPLY CFM FOR DESIRED DIFFERENCE BY SUPPLY AIR QUANTITY FORMULA.
†WHEN BYPASSING A MIXTURE OF OUTDOOR AND RETURN AIR, USE SUPPLY CFM. WHEN BYPASSING RETURN AIR ONLY, USE DEHUMIDIFIED CFM.

E-5024

AIR CONDITIONING LOAD ESTIMATE (REPRODUCED BY PERMISSION OF CARRIER CORPORATION)

Keller & Gannon
Engineers-Architects

22

COMPUTATION SHEET

COMPUTED BY EDT
CHECKED BY
DATE APR 1992 19..
REV. 19

UNASSIGNED
MEZZ. FLR.
(STORAGE)
(32)

PROJECT LAC-ALS
MEZZ. FLR.

SHEET NO. 36 OF 47 SHEETS

Space Used For
Size 4 × 14 = 56 SQ FT × 12 = 784 CU FT

ITEM	AREA OR QUANTITY	SUN GAIN OR TEMP. DIFF.	FACTOR	BTU/HOUR
SOLAR GAIN—GLASS				
Glass	SQ FT ×		×	
Glass	SQ FT ×		×	
Glass	SQ FT ×		×	
Glass	SQ FT ×		×	
Skylight	SQ FT ×		×	
SOLAR & TRANS. GAIN—WALLS & ROOF				
Wall	SQ FT ×		×	
Wall	SQ FT ×		×	
Wall	SQ FT ×		×	
Wall	SQ FT ×		×	
Roof-Sun	SQ FT ×		×	
Roof-Shaded	SQ FT ×		×	
TRANS. GAIN—EXCEPT WALLS & ROOF				
All Glass	SQ FT ×		×	
Partition	SQ FT ×		×	
Ceiling	SQ FT ×		×	
Floor	SQ FT ×		×	
Infiltration	CFM ×		× 1.08	
INTERNAL HEAT				
People	PEOPLE ×			
Power	HP OR KW ×			
Lights	WATTS × 3.4 ×			
Appliances, Etc.			×	
Additional Heat Gains			×	
			SUB TOTAL	
Storage	SQ FT ×		× (–)	
			SUB TOTAL	
Safety Factor	%			
			ROOM SENSIBLE HEAT ■	
SUPPLY DUCT HEAT GAIN	SUPPLY DUCT % + LEAK. LOSS	FAN % + M. P.	%	
Outdoor Air	CFM ×	F ×	BF × 1.08	
			EFFECTIVE ROOM SENSIBLE HEAT ■	
LATENT HEAT				
Infiltration	CFM ×		GR/LB × 0.68	
People	PEOPLE ×			
Steam	LB/HR × 1050			
Appliances, Etc.				
Additional Heat Gains				
Vapor Trans.	SQ × 1/100 ×	GR/LB ×		
			SUB TOTAL	
Safety Factor	%			
			ROOM LATENT HEAT	
SUPPLY DUCT LEAKAGE LOSS			%	
Outdoor Air	CFM ×	GR/LB ×	BF × 0.68	
			EFFECTIVE ROOM LATENT HEAT	
			EFFECTIVE ROOM TOTAL HEAT ■	
OUTDOOR AIR HEAT				
Sensible:	CFM ×	F × (1–	BF) × 1.08	
Latent:	CFM ×	GR/LB × (1–	BF) × 0.68	
RETURN DUCT HEAT GAIN	RETURN DUCT % + LEAK. GAIN	HP % + PUMP	SUB TOTAL DEHUM. & % + PIPE LOSS %	
			GRAND TOTAL HEAT ■	

Estimate for LOCAL TIME SUN TIME | Peak Load LOCAL TIME SUN TIME

Hours of Operation

CONDITIONS	DB	WB	% RH	DP	GR/LB
OUTDOOR (OA)					
ROOM (RM)					
DIFFERENCE					

OUTDOOR AIR

VENTILATION: ____ PEOPLE × ____ CFM/PERSON × ____
____ SQ FT × ____ CFM/SQ FT = ____
CFM VENTILATION ■

INFILTRATION: SWINGING REVOLVING DOORS ____ PEOPLE × ____ CFM/PERSON × ____
OPEN DOORS ____ DOORS × ____ CFM/DOOR × ____
EXHAUST FAN ____
CRACK ____ FEET × ____ CFM/FT = ____
CFM INFILTRATION ■

CFM OUTDOOR AIR THRU APPARATUS ■

APPARATUS DEWPOINT

ESHF: EFFECTIVE SENS HEAT FACTOR = EFFECTIVE ROOM SENS. HEAT / EFFECTIVE ROOM TOTAL HEAT = ____

ADP: INDICATED ADP = ____ F SELECTED ADP = ____ F

DEHUMIDIFIED AIR QUANTITY

TEMP RISE: (1– ____ BF) × (T_{RM} ____ F – T_{ADP} ____ F) = ____ F

DEHUM. CPM: EFFECTIVE ROOM SENS. HEAT / (1.08 × $F_{TEMP. RISE}$) = ____ CFM_{OA}

OUTLET TEMP. DIFF.: ROOM SENS. HEAT / (1.08 × CFM_{OA}) = ____ $F_{(RM-OUTLET\ AIR)}$*

SUPPLY AIR QUANTITY

SUPPLY CPM: ROOM SENS. HEAT / (1.08 × F DESIRED DIFF) = ____ CFM_{SA}

BYPASS CPM: ____ CFM_{SA} – ____ CFM_{OA} = ____ CFM_{BA}

RESULTING ENT & LVG CONDITIONS AT APPARATUS

EDB: T_{RM} ____ F + (CFM_{OA} / CFM_{SA}) × (T_{OA} ____ F – T_{RM} ____ F) = T_{EDB} ____ F

LDB: T_{ADP} ____ F + ____ BF × (T_{EDB} ____ F – T_{ADP} ____ F) = T_{LDB} ____ F
FROM PSYCH. CHART: T_{EWB} ____ F, T_{LWB} ____ F

NOTES

6 AC:

$$CFM = \frac{784 \times 6}{60} = 80\ CFM.$$

*IF THIS ΔT IS TOO HIGH, DETERMINE SUPPLY CPM FOR DESIRED DIFFERENCE BY SUPPLY AIR QUANTITY FORMULA.

†WHEN BYPASSING A MIXTURE OF OUTDOOR AND RETURN AIR, USE SUPPLY CPM. WHEN BYPASSING RETURN AIR ONLY, USE DEHUMIDIFIED CPM.

E-5024

AIR CONDITIONING LOAD ESTIMATE (REPRODUCED BY PERMISSION OF CARRIER CORPORATION)

Keller & Gannon
Engineers–Architects

23

COMPUTATION SHEET

COMPUTED BY EDT
CHECKED BY
DATE APR. 1992 19
REV. 19

OPEN OFFICE
HE22. FLR.

PROJECT CSC-AUS
HE22. FLR.

(23) SHEET NO. 37 OF 47 SHEETS

Space Used For
Size TOTAL AREA = 416 SQ FT × 14 = 5824 CU FT

ITEM	AREA OR QUANTITY	SUN GAIN OR TEMP. DIFF.	FACTOR	BTU/HOUR
SOLAR GAIN–GLASS				
Glass	SQ FT ×	×		
Glass	SQ FT ×	×		
Glass	SQ FT ×	×		
Glass	SQ FT ×	×		
Skylight	SQ FT ×	×		
SOLAR & TRANS. GAIN–WALLS & ROOF				
Wall	SQ FT ×	×		
Wall	SQ FT ×	×		
Wall	SQ FT ×	×		
Wall	SQ FT ×	×		
Roof-Sun	416 SQ FT ×	37 ×	0.05	770
Roof-Shaded	SQ FT ×	×		
TRANS. GAIN–EXCEPT WALLS & ROOF				
All Glass	SQ FT ×	×		
Partition	SQ FT ×	×		
Ceiling	SQ FT ×	×		
Floor	SQ FT ×	×		
Infiltration	CFM ×	× 1.08		
INTERNAL HEAT				
People	6	PEOPLE × 315		1890
Power	416 × (6.25)	HP OR KW × 2.4		6990
Lights	416 × 2 W/ft²	WATTS × 3.4 ×		2830
Appliances, Etc.		×		
Additional Heat Gains		×		
		SUB TOTAL		13980
Storage	SQ FT ×	× (–)		
		SUB TOTAL		
Safety Factor	5 %			700
		ROOM SENSIBLE HEAT		14680
SUPPLY DUCT HEAT GAIN	SUPPLY DUCT % + LEAK. LOSS	FAN % + H. P. %		
Outdoor Air	CFM ×	F ×	BF × 1.08	
		EFFECTIVE ROOM SENSIBLE HEAT		
LATENT HEAT				
Infiltration	CFM ×	GR/LB × 0.68		
People	PEOPLE ×			
Steam	LB/HR × 1050			
Appliances, Etc.				
Additional Heat Gains				
Vapor Trans.	SQ × 1/100 ×	GR/LB ×		
		SUB TOTAL		
Safety Factor	%			
		ROOM LATENT HEAT		
SUPPLY DUCT LEAKAGE LOSS		%		
Outdoor Air	CFM ×	GR/LB ×	BF × 0.68	
		EFFECTIVE ROOM LATENT HEAT		
		EFFECTIVE ROOM TOTAL HEAT		
OUTDOOR AIR HEAT				
Sensible:	90 CFM ×	9 F × (1–	0 BF) × 1.08	875
Latent:	CFM ×	GR/LB × (1–	BF) × 0.68	
RETURN DUCT HEAT GAIN	RETURN DUCT % + LEAK. GAIN	HP % + PUMP	SUB TOTAL DEHUM. & % + PIPE LOSS %	
		GRAND TOTAL HEAT		15550

Estimate for — LOCAL TIME / SUN TIME
Peak Load — LOCAL TIME / SUN TIME
Hours of Operation

CONDITIONS	DB	WB	% RH	DP	GR/LB
OUTDOOR (OA)	85				
ROOM (RM)	76				
DIFFERENCE	9				

OUTDOOR AIR

VENTILATION: 6 PEOPLE × 15 CFM/PERSON = 90
SQ FT × CFM/SQ FT =
CFM VENTILATION

INFILTRATION: SWINGING REVOLVING DOORS PEOPLE × CFM/PERSON =
OPEN DOORS DOORS × CFM/DOOR =
EXHAUST FAN
CRACK FEET × CFM/FT =
CFM INFILTRATION

CFM OUTDOOR AIR THRU APPARATUS

APPARATUS DEWPOINT

ESHF: EFFECTIVE SENS HEAT FACTOR = EFFECTIVE ROOM SENS. HEAT / EFFECTIVE ROOM TOTAL HEAT =

ADP: INDICATED ADP = F SELECTED ADP = F

DEHUMIDIFIED AIR QUANTITY

TEMP RISE: (1– BF) × (T_{RM} F – T_{ADP} F) = F

DEHUM. CPM: EFFECTIVE ROOM SENS. HEAT / 1.08 × $F_{TEMP. RISE}$ = CFM_{DA}

OUTLET TEMP. DIFF.: ROOM SENS. HEAT / 1.08 × CFM_{DA} = $F_{(RM-OUTLET AIR)}$*

SUPPLY AIR QUANTITY

SUPPLY CPM: 14,680 ROOM SENS. HEAT / 1.08 × 20 F DESIRED DIFF = 780 CFM_{SA}

BYPASS CPM: CFM_{SA} – CFM_{DA} = CFM_{BA}

RESULTING ENT & LVG CONDITIONS AT APPARATUS

EDB: T_{RM} F + CFM_{OA} / CFM† × (T_{OA} F – T_{RM} F) = T_{EDB} F

LDB: T_{ADP} F + BF × (T_{EDB} F – T_{ADP} F) = T_{LDB} F
FROM PSYCH. CHART: T_{EWB} F, T_{LWB} F

NOTES

SA = 780 CFM.
OA = 90 "
TH = 15,550 BTUH.

*IF THIS ΔT IS TOO HIGH, DETERMINE SUPPLY CPM FOR DESIRED DIFFERENCE BY SUPPLY AIR QUANTITY FORMULA.
†WHEN BYPASSING A MIXTURE OF OUTDOOR AND RETURN AIR, USE SUPPLY CPM. WHEN BYPASSING RETURN AIR ONLY, USE DEHUMIDIFIED CPM.

E-5024

AIR CONDITIONING LOAD ESTIMATE (REPRODUCED BY PERMISSION OF CARRIER CORPORATION)

Keller & Gannon
Engineers–Architects

COMPUTATION SHEET

COMPUTED BY: EDT
CHECKED BY:
DATE: APR 1992 19__
REV: 19__

STORAGE
MEZZ. FLR.

PROJECT: LBL-AUS
MEZZ. FLR.

SHEET NO. 38 OF 47 SHEETS

Space Used For:
Size 8 × 14 = 112 SQ FT × 14 = 1568 CU FT

ITEM	AREA OR QUANTITY	SUN GAIN OR TEMP. DIFF.	FACTOR	BTU/HOUR
SOLAR GAIN–GLASS				
Glass	SQ FT ×		×	
Glass	SQ FT ×		×	
Glass	SQ FT ×		×	
Glass	SQ FT ×		×	
Skylight	SQ FT ×		×	
SOLAR & TRANS. GAIN–WALLS & ROOF				
Wall	SQ FT ×		×	
Wall	SQ FT ×		×	
Wall	SQ FT ×		×	
Wall	SQ FT ×		×	
Roof-Sun	SQ FT ×		×	
Roof-Shaded	SQ FT ×		×	
TRANS. GAIN–EXCEPT WALLS & ROOF				
All Glass	SQ FT ×		×	
Partition	SQ FT ×		×	
Ceiling	SQ FT ×		×	
Floor	SQ FT ×		×	
Infiltration	CFM ×		× 1.08	
INTERNAL HEAT				
People	PEOPLE ×			
Power	HP OR KW ×			
Lights	WATTS × 3.4 ×			
Appliances, Etc.			×	
Additional Heat Gains			×	
			SUB TOTAL	
Storage	SQ FT ×		× (–)	
			SUB TOTAL	
Safety Factor	%			
			ROOM SENSIBLE HEAT	
SUPPLY DUCT HEAT GAIN	SUPPLY DUCT % + LEAK. LOSS	FAN % + H. P.	%	
Outdoor Air	CFM ×	F ×	BF × 1.08	
			EFFECTIVE ROOM SENSIBLE HEAT	
LATENT HEAT				
Infiltration	CFM ×		GR/LB × 0.68	
People	PEOPLE ×			
Steam	LB/HR × 1050			
Appliances, Etc.				
Additional Heat Gains				
Vapor Trans.	SQ × 1/100 ×	GR/LB ×		
			SUB TOTAL	
Safety Factor	%			
			ROOM LATENT HEAT	
SUPPLY DUCT LEAKAGE LOSS			%	
Outdoor Air	CFM ×	GR/LB ×	BF × 0.68	
			EFFECTIVE ROOM LATENT HEAT	
			EFFECTIVE ROOM TOTAL HEAT	
OUTDOOR AIR HEAT				
Sensible:	CFM ×	F × (1–	BF) × 1.08	
Latent:	CFM ×	GR/LB × (1–	BF) × 0.68	
RETURN DUCT HEAT GAIN	RETURN DUCT % + LEAK. GAIN	HP % + PUMP	SUB TOTAL DEHUM. & % + PIPE LOSS %	
			GRAND TOTAL HEAT	

Estimate for: LOCAL TIME SUN TIME | Peak Load: LOCAL TIME SUN TIME

Hours of Operation

CONDITIONS	DB	WB	% RH	DP	GR/LB
OUTDOOR (OA)					
ROOM (RM)					
DIFFERENCE					

OUTDOOR AIR

VENTILATION: ____ PEOPLE × ____ CFM/PERSON = ____
____ SQ FT × ____ CFM/SQ FT = ____
CFM VENTILATION

INFILTRATION: SWINGING REVOLVING DOORS ____ PEOPLE × ____ CFM/PERSON = ____
OPEN DOORS ____ DOORS × ____ CFM/DOOR = ____
EXHAUST FAN ____
CRACK ____ FEET × ____ CFM/FT = ____
CFM INFILTRATION

CFM OUTDOOR AIR THRU APPARATUS

APPARATUS DEWPOINT

ESHF: EFFECTIVE SENS HEAT FACTOR = EFFECTIVE ROOM SENS. HEAT / EFFECTIVE ROOM TOTAL HEAT = ____

ADP: INDICATED ADP = ____ F SELECTED ADP = ____ F

DEHUMIDIFIED AIR QUANTITY

TEMP RISE: (1– ____ BF) × (T_{RM} ____ F – T_{ADP} ____ F) = ____ F

DEHUM. CPM: EFFECTIVE ROOM SENS. HEAT / (1.08 × $F_{TEMP. RISE}$) = ____ CFM_{DA}

OUTLET TEMP. DIFF.: ROOM SENS. HEAT / (1.08 × CFM_{DA}) = ____ $F_{(RM-OUTLET\ AIR)}$*

SUPPLY AIR QUANTITY

SUPPLY CPM: ROOM SENS. HEAT / (1.08 × F DESIRED DIFF) = ____ CFM_{SA}

BYPASS CPM: ____ CFM_{SA} – ____ CFM_{DA} = ____ CFM_{BA}

RESULTING ENT & LVG CONDITIONS AT APPARATUS

EDB: T_{RM} ____ F + (CFM_{DA} / CFM_{SA}) × (T_{OA} ____ F – T_{RM} ____ F) = T_{EDB} ____ F

LDB: T_{ADP} ____ F + ____ BF × (T_{EDB} ____ F – T_{ADP} ____ F) = T_{LDB} ____ F

FROM PSYCH. CHART: T_{EWB} ____ F, T_{LWB} ____ F

NOTES

6 AC!

$$CFM = \frac{1568 \times 6}{60}$$

$$= 160 \text{ CFM.}$$

*IF THIS ΔT IS TOO HIGH, DETERMINE SUPPLY CFM FOR DESIRED DIFFERENCE BY SUPPLY AIR QUANTITY FORMULA.
†WHEN BYPASSING A MIXTURE OF OUTDOOR AND RETURN AIR, USE SUPPLY CFM. WHEN BYPASSING RETURN AIR ONLY, USE DEHUMIDIFIED CPM.

E-5024

AIR CONDITIONING LOAD ESTIMATE (REPRODUCED BY PERMISSION OF CARRIER CORPORATION)

Keller & Gannon
Engineers–Architects

COMPUTATION SHEET

COMPUTED BY EDT
CHECKED BY
DATE 1992 19
REV. 19

SECRETARIES / COPY
MEZZ. FLR.

PROJECT LRL-ALS
MEZZ. FLR.

SHEET NO. 39 OF 47 SHEETS

Space Used For
Size TOTAL AREA = 432 SQ FT × 14 = 6048 CU FT

ITEM	AREA OR QUANTITY	SUN GAIN OR TEMP. DIFF.	FACTOR	BTU/HOUR
SOLAR GAIN–GLASS				
Glass	SQ FT ×		×	
Glass	SQ FT ×		×	
Glass	SQ FT ×		×	
Glass	SQ FT ×		×	
Skylight	SQ FT ×		×	
SOLAR & TRANS. GAIN–WALLS & ROOF				
Wall	SQ FT ×		×	
Wall	SQ FT ×		×	
Wall	SQ FT ×		×	
Wall	SQ FT ×		×	
Roof-Sun	432 SQ FT ×	37	× 0.05	800
Roof-Shaded	SQ FT ×		×	
TRANS. GAIN–EXCEPT WALLS & ROOF				
All Glass	SQ FT ×		×	
Partition	SQ FT ×		×	
Ceiling	SQ FT ×		×	
Floor	SQ FT ×		×	
Infiltration	CFM ×		× 1.08	
INTERNAL HEAT				
People	4	PEOPLE ×	315	1260
Power	400 × (6 pc)	~~HP OR KW~~ ×	3.4	8160
Lights	432 × 2W/sf	WATTS × 3.4 ×	2.4	2940
Appliances, Etc.			×	
Additional Heat Gains			×	
			SUB TOTAL	13160
Storage	SQ FT ×		× (–)	
			SUB TOTAL	
Safety Factor	5	%		660
			ROOM SENSIBLE HEAT	13820
SUPPLY DUCT HEAT GAIN	SUPPLY DUCT % + LEAK. LOSS	FAN % + H. P.	%	
Outdoor Air	CFM ×	F ×	BF × 1.08	
			EFFECTIVE ROOM SENSIBLE HEAT	
LATENT HEAT				
Infiltration	CFM ×		GR/LB × 0.68	
People	PEOPLE ×			
Steam	LB/HR × 1050			
Appliances, Etc.				
Additional Heat Gains				
Vapor Trans.	SQ × 1/100 ×	GR/LB ×		
			SUB TOTAL	
Safety Factor		%		
			ROOM LATENT HEAT	
SUPPLY DUCT LEAKAGE LOSS			%	
Outdoor Air	CFM ×	GR/LB ×	BF × 0.68	
			EFFECTIVE ROOM LATENT HEAT	
			EFFECTIVE ROOM TOTAL HEAT	
OUTDOOR AIR HEAT				
Sensible:	60 CFM ×	9 F × (1–	0 BF) × 1.08	585
Latent:	CFM ×	GR/LB × (1–	BF) × 0.68	
RETURN DUCT HEAT GAIN	RETURN DUCT % + LEAK. GAIN	HP % + PUMP	SUB TOTAL DEHUM. & % + PIPE LOSS %	
			GRAND TOTAL HEAT	14405

Estimate for LOCAL TIME SUN TIME | Peak Load LOCAL TIME SUN TIME

Hours of Operation

CONDITIONS	DB	WB	% RH	DP	GR LB
OUTDOOR (OA)	83				
ROOM (RM)	76				
DIFFERENCE	9				

OUTDOOR AIR

VENTILATION: 4 PEOPLE × 15 CFM/PERSON = 60
SQ FT × CFM/SQ FT =
CFM VENTILATION

INFILTRATION: SWINGING REVOLVING DOORS PEOPLE × CFM/PERSON =
OPEN DOORS DOORS × CFM/DOOR ×
EXHAUST FAN
CRACK FEET × CFM/FT =
CFM INFILTRATION

CFM OUTDOOR AIR THRU APPARATUS

APPARATUS DEWPOINT

ESHF: EFFECTIVE SENS HEAT FACTOR = EFFECTIVE ROOM SENS. HEAT / EFFECTIVE ROOM TOTAL HEAT =

ADP: INDICATED ADP = F SELECTED ADP = F

DEHUMIDIFIED AIR QUANTITY

TEMP RISE: (1– BF) × (T_{RM} F – T_{ADP} F) = F

DEHUM. CFM: EFFECTIVE ROOM SENS. HEAT / (1.08 × $F_{TEMP. RISE}$) = CFM_{DA}

OUTLET TEMP. DIFF.: ROOM SENS. HEAT / (1.08 × CFM_{DA}) = $F_{(RM-OUTLET\ AIR)}$*

SUPPLY AIR QUANTITY

SUPPLY CFM: 13,820 ROOM SENS. HEAT / (1.08 × 20 F DESIRED DIFF) = 640 CFM_{SA}

BYPASS CFM: CFM_{SA} – CFM_{DA} = CFM_{BA}

RESULTING ENT & LVG CONDITIONS AT APPARATUS

EDB: T_{RM} F + (CFM_{OA} / CFM† × (T_{OA} F – T_{RM} F)) = T_{EDB} F

LDB: T_{ADP} F + BF × (T_{EDB} F – T_{ADP} F) = T_{LDB} F

FROM PSYCH. CHART: T_{EWB} F, T_{LWB} F

NOTES

SA = 640 CFM
OA = 60 "
TH = 14,405 BTUH.

*IF THIS ΔT IS TOO HIGH, DETERMINE SUPPLY CFM FOR DESIRED DIFFERENCE BY SUPPLY AIR QUANTITY FORMULA.
†WHEN BYPASSING A MIXTURE OF OUTDOOR AND RETURN AIR, USE SUPPLY CFM. WHEN BYPASSING RETURN AIR ONLY, USE DEHUMIDIFIED CFM.

E-5024

AIR CONDITIONING LOAD ESTIMATE (REPRODUCED BY PERMISSION OF CARRIER CORPORATION)

Keller & Gannon
Engineers-Architects

COMPUTATION SHEET

COMPUTED BY EDT
CHECKED BY
DATE APR 1992 19
REV. 19

JANITOR
MEZZ. FLR.
(32)

PROJECT VAL-ALS
MEZZ. FLR.
SHEET NO. 40 OF 47 SHEETS

Space Used For
Size 7 × 8 = 56 SQ FT × 14 = 784 CU FT

ITEM	AREA OR QUANTITY	SUN GAIN OR TEMP. DIFF.	FACTOR	BTU/HOUR
SOLAR GAIN—GLASS				
Glass	SQ FT ×		×	
Glass	SQ FT ×		×	
Glass	SQ FT ×		×	
Glass	SQ FT ×		×	
Skylight	SQ FT ×		×	
SOLAR & TRANS. GAIN—WALLS & ROOF				
Wall	SQ FT ×		×	
Wall	SQ FT ×		×	
Wall	SQ FT ×		×	
Wall	SQ FT ×		×	
Roof-Sun	SQ FT ×		×	
Roof-Shaded	SQ FT ×		×	
TRANS. GAIN—EXCEPT WALLS & ROOF				
All Glass	SQ FT ×		×	
Partition	SQ FT ×		×	
Ceiling	SQ FT ×		×	
Floor	SQ FT ×		×	
Infiltration	CFM ×		× 1.08	
INTERNAL HEAT				
People	PEOPLE ×			
Power	HP OR KW ×			
Lights	WATTS × 3.4 ×			
Appliances, Etc.			×	
Additional Heat Gains			×	
			SUB TOTAL	
Storage	SQ FT ×		× (–)	
			SUB TOTAL	
Safety Factor	%			
			ROOM SENSIBLE HEAT	
SUPPLY DUCT HEAT GAIN	SUPPLY DUCT % + LEAK. LOSS	FAN % + H. P.	%	
Outdoor Air	CFM ×	F ×	BF × 1.08	
			EFFECTIVE ROOM SENSIBLE HEAT	
LATENT HEAT				
Infiltration	CFM ×		GR/LB × 0.68	
People	PEOPLE ×			
Steam	LB/HR × 1050			
Appliances, Etc.				
Additional Heat Gains				
Vapor Trans.	SQ × 1/100 ×		GR/LB ×	
			SUB TOTAL	
Safety Factor	%			
			ROOM LATENT HEAT	
SUPPLY DUCT LEAKAGE LOSS			%	
Outdoor Air	CFM ×	GR/LB ×	BF × 0.68	
			EFFECTIVE ROOM LATENT HEAT	
			EFFECTIVE ROOM TOTAL HEAT	
OUTDOOR AIR HEAT				
Sensible:	CFM ×		F × (1– BF) × 1.08	
Latent:	CFM ×		GR/LB × (1– BF) × 0.68	
RETURN DUCT HEAT GAIN	RETURN DUCT % + LEAK. GAIN	HP % + PUMP	SUB TOTAL DEHUM. & % + PIPE LOSS %	
			GRAND TOTAL HEAT	

Estimate for LOCAL TIME SUN TIME | Peak Load LOCAL TIME SUN TIME

Hours of Operation

CONDITIONS	DB	WB	% RH	DP	GR/LB
OUTDOOR (OA)					
ROOM (RM)					
DIFFERENCE					

OUTDOOR AIR

VENTILATION: ____ PEOPLE × ____ CFM/PERSON = ____
____ SQ FT × ____ CFM/SQ FT = ____
CFM VENTILATION

INFILTRATION: SWINGING REVOLVING DOORS ____ PEOPLE × ____ CFM/PERSON = ____
OPEN DOORS ____ DOORS × ____ CFM/DOOR = ____
EXHAUST FAN ____
CRACK ____ FEET × ____ CFM/FT = ____
CFM INFILTRATION

CFM OUTDOOR AIR THRU APPARATUS

APPARATUS DEWPOINT

ESHF: EFFECTIVE SENS HEAT FACTOR = EFFECTIVE ROOM SENS. HEAT / EFFECTIVE ROOM TOTAL HEAT = ____

ADP: INDICATED ADP = ____ F SELECTED ADP = ____ F

DEHUMIDIFIED AIR QUANTITY

TEMP RISE: (1– ____ BF) × (T_RM ____ F – T_ADP ____ F) = ____ F

DEHUM. CPM: EFFECTIVE ROOM SENS. HEAT / (1.08 × F_TEMP. RISE) = ____ CFM_OA

OUTLET TEMP. DIFF.: ROOM SENS. HEAT / (1.08 × CFM_OA) = ____ F (RM–OUTLET AIR)*

SUPPLY AIR QUANTITY

SUPPLY CPM: ROOM SENS. HEAT / (1.08 × F DESIRED DIFF) = ____ CFM_SA

BYPASS CPM: ____ CFM_SA – ____ CFM_OA = ____ CFM_BA

RESULTING ENT & LVG CONDITIONS AT APPARATUS

EDB: T_RM ____ F + (CFM_OA / CFM†) × (T_OA ____ F – T_RM ____ F) = T_EDB ____ F

LDB: T_ADP ____ F + ____ BF × (T_EDB ____ F – T_ADP ____ F) = T_LDB ____ F
FROM PSYCH. CHART: T_EWB ____ F, T_LWB ____ F

NOTES

6 A.C.:

$$CPM = \frac{784 \times 6}{60} = 80 \text{ CFM.}$$

*IF THIS ΔT IS TOO HIGH, DETERMINE SUPPLY CPM FOR DESIRED DIFFERENCE BY SUPPLY AIR QUANTITY FORMULA.
†WHEN BYPASSING A MIXTURE OF OUTDOOR AND RETURN AIR, USE SUPPLY CPM. WHEN BYPASSING RETURN AIR ONLY, USE DEHUMIDIFIED CPM.

E-5024

AIR CONDITIONING LOAD ESTIMATE (REPRODUCED BY PERMISSION OF CARRIER CORPORATION)

Keller & Gannon
Engineers-Architects

COMPUTATION SHEET

COMPUTED BY EDT
CHECKED BY
DATE APR 1992 19
REV. 19

KITCHEN
MEZZ. FLR.

PROJECT LSL-AUS
MEZZ. FLR.
SHEET NO. 41 OF 47 SHEETS

Space Used For
Size 7 × 9 = 63 SQ FT × 14 = 882 CU FT

ITEM	AREA OR QUANTITY	SUN GAIN OR TEMP. DIFF.	FACTOR	BTU/HOUR
SOLAR GAIN—GLASS				
Glass	SQ FT ×		×	
Glass	SQ FT ×		×	
Glass	SQ FT ×		×	
Glass	SQ FT ×		×	
Skylight	SQ FT ×		×	
SOLAR & TRANS. GAIN—WALLS & ROOF				
Wall	SQ FT ×		×	
Wall	SQ FT ×		×	
Wall	SQ FT ×		×	
Wall	SQ FT ×		×	
Roof-Sun	SQ FT ×		×	
Roof-Shaded	SQ FT ×		×	
TRANS. GAIN—EXCEPT WALLS & ROOF				
All Glass	SQ FT ×		×	
Partition	SQ FT ×		×	
Ceiling	SQ FT ×		×	
Floor	SQ FT ×		×	
Infiltration	CFM ×		× 1.08	
INTERNAL HEAT				
People	PEOPLE ×			
Power	HP OR KW ×			
Lights	WATTS × 3.4 ×			
Appliances, Etc.			×	
Additional Heat Gains			×	
			SUB TOTAL	
Storage	SQ FT ×		× (–)	
			SUB TOTAL	
Safety Factor	%			
			ROOM SENSIBLE HEAT	
SUPPLY DUCT HEAT GAIN	SUPPLY DUCT % + LEAK. LOSS	FAN % + H. P.	%	
Outdoor Air	CFM ×	F ×	BF × 1.08	
			EFFECTIVE ROOM SENSIBLE HEAT	
LATENT HEAT				
Infiltration	CFM ×		GR/LB × 0.68	
People	PEOPLE ×			
Steam	LB/HR × 1050			
Appliances, Etc.				
Additional Heat Gains				
Vapor Trans.	SQ × 1/100 ×		GR/LB ×	
			SUB TOTAL	
Safety Factor	%			
			ROOM LATENT HEAT	
SUPPLY DUCT LEAKAGE LOSS			%	
Outdoor Air	CFM ×	GR/LB ×	BF × 0.68	
			EFFECTIVE ROOM LATENT HEAT	
			EFFECTIVE ROOM TOTAL HEAT	
OUTDOOR AIR HEAT				
Sensible:	CFM ×	F × (1–	BF) × 1.08	
Latent:	CFM ×	GR/LB × (1–	BF) × 0.68	
RETURN DUCT HEAT GAIN	RETURN DUCT % + LEAK. GAIN	HP % + PUMP	SUB TOTAL DEHUM. & % + PIPE LOSS %	
			GRAND TOTAL HEAT	

Estimate for — LOCAL TIME / SUN TIME
Peak Load — LOCAL TIME / SUN TIME
Hours of Operation

CONDITIONS	DB	WB	% RH	DP	GR/LB
OUTDOOR (OA)					
ROOM (RM)					
DIFFERENCE					

OUTDOOR AIR

VENTILATION: ____ PEOPLE × ____ CFM/PERSON = ____
____ SQ FT × ____ CFM/SQ FT = ____
CFM VENTILATION

INFILTRATION: SWINGING / REVOLVING DOORS ____ PEOPLE × ____ CFM/PERSON = ____
OPEN DOORS ____ DOORS × ____ CFM/DOOR = ____
EXHAUST FAN ____
CRACK ____ FEET × ____ CFM/FT = ____
CFM INFILTRATION

CFM OUTDOOR AIR THRU APPARATUS

APPARATUS DEWPOINT

ESHF: EFFECTIVE SENS HEAT FACTOR = EFFECTIVE ROOM SENS. HEAT / EFFECTIVE ROOM TOTAL HEAT = ____

ADP: INDICATED ADP = ____ F SELECTED ADP = ____ F

DEHUMIDIFIED AIR QUANTITY

TEMP RISE: (1– ____ BF) × (T_{RM} ____ F – T_{ADP} ____ F) = ____ F

DEHUM. CPM: EFFECTIVE ROOM SENS. HEAT / (1.08 × $F_{TEMP. RISE}$) = ____ CFM_{DA}

OUTLET TEMP. DIFF.: ROOM SENS. HEAT / (1.08 × CFM_{DA}) = ____ F(RM–OUTLET AIR)*

SUPPLY AIR QUANTITY

SUPPLY CPM: ROOM SENS. HEAT / (1.08 × F DESIRED DIFF) = ____ CFM_{SA}

BYPASS CPM: ____ CFM_{SA} – ____ CFM_{DA} = ____ CFM_{BA}

RESULTING ENT & LVG CONDITIONS AT APPARATUS

EDB: T_{RM} ____ F + (CFM_{OA} / CFM1) × (T_{OA} ____ F – T_{RM} ____ F) = T_{EDB} ____ F

LDB: T_{ADP} ____ F + ____ BF × (T_{EDB} ____ F – T_{ADP} ____ F) = T_{LDB} ____ F

FROM PSYCH. CHART: T_{EWB} ____ F, T_{LWB} ____ F

NOTES

ΔT:

$$CFM = \frac{882 \times 8\Delta T}{60} = 120\ CFM$$

*IF THIS ΔT IS TOO HIGH, DETERMINE SUPPLY CPM FOR DESIRED DIFFERENCE BY SUPPLY AIR QUANTITY FORMULA.

†WHEN BYPASSING A MIXTURE OF OUTDOOR AND RETURN AIR, USE SUPPLY CPM. WHEN BYPASSING RETURN AIR ONLY, USE DEHUMIDIFIED CPM.

E-5024

AIR CONDITIONING LOAD ESTIMATE (REPRODUCED BY PERMISSION OF CARRIER CORPORATION)

Keller & Gannon
Engineers-Architects

26

COMPUTATION SHEET

COMPUTED BY EDT
CHECKED BY
DATE APR 1992 19
REV. 19

MAIC R0011

(38)

PROJECT LAG ALS MEZZ. FLR

SHEET NO. 42 OF 47 SHEETS

Space Used For
Size 9 × 14 = 126 SQ FT × 14 = 1764 CU FT

ITEM	AREA OR QUANTITY	SUN GAIN OR TEMP. DIFF.	FACTOR	BTU/HOUR
SOLAR GAIN—GLASS				
Glass	SQ FT ×	×		
Glass	SQ FT ×	×		
Glass	SQ FT ×	×		
Glass	SQ FT ×	×		
Skylight	SQ FT ×	×		
SOLAR & TRANS. GAIN—WALLS & ROOF				
Wall	SQ FT ×	×		
Wall	SQ FT ×	×		
Wall	SQ FT ×	×		
Wall	SQ FT ×	×		
Roof-Sun	126 SQ FT ×	37 ×	0.85	2335
Roof-Shaded	SQ FT ×	×		
TRANS. GAIN—EXCEPT WALLS & ROOF				
All Glass	SQ FT ×	×		
Partition	SQ FT ×	×		
Ceiling	SQ FT ×	×		
Floor	SQ FT ×	×		
Infiltration	CFM ×	× 1.08		
INTERNAL HEAT				
People	2	PEOPLE × 315		630
Power	400 (1 PC)	HP OR KW × 3.4		1360
Lights	1200 watts	WATTS × 3.4 ×		260
Appliances, Etc.		×		
Additional Heat Gains		×		
		SUB TOTAL		3085
Storage	SQ FT ×	× (–)		
		SUB TOTAL		
Safety Factor	5 %			155
		ROOM SENSIBLE HEAT		3240
SUPPLY DUCT HEAT GAIN	SUPPLY DUCT % + LEAK. LOSS	FAN % + H. P. %		
Outdoor Air	CFM ×	F ×	BF × 1.08	
		EFFECTIVE ROOM SENSIBLE HEAT		
LATENT HEAT				
Infiltration	CFM ×	GR/LB × 0.68		
People	PEOPLE ×			
Steam	LB/HR × 1050			
Appliances, Etc.				
Additional Heat Gains				
Vapor Trans.	SQ × 1/100 ×	GR/LB ×		
		SUB TOTAL		
Safety Factor	%			
		ROOM LATENT HEAT		
SUPPLY DUCT LEAKAGE LOSS		%		
Outdoor Air	CFM ×	GR/LB ×	BF × 0.68	
		EFFECTIVE ROOM LATENT HEAT		
		EFFECTIVE ROOM TOTAL HEAT		
OUTDOOR AIR HEAT				
Sensible:	30 CFM ×	9 F × (1– 0	BF) × 1.08	295
Latent:	CFM ×	GR/LB × (1–	BF) × 0.68	
RETURN DUCT HEAT GAIN	RETURN DUCT % + LEAK. GAIN	HP % + PUMP	SUB TOTAL DEHUM. & % + PIPE LOSS %	
		GRAND TOTAL HEAT		3535

Estimate for — LOCAL TIME / SUN TIME
Peak Load — LOCAL TIME / SUN TIME

Hours of Operation

CONDITIONS	DB	WB	% RH	DP	GR/LB
OUTDOOR (OA)	85				
ROOM (RM)	76				
DIFFERENCE	9				

OUTDOOR AIR

VENTILATION: 2 PEOPLE × 15 CFM/PERSON = 30
SQ FT × CFM/SQ FT =
CFM VENTILATION

INFILTRATION: SWINGING REVOLVING DOORS PEOPLE × CFM/PERSON =
OPEN DOORS DOORS × CFM/DOOR =
EXHAUST FAN
CRACK FEET × CFM/FT =
CFM INFILTRATION

CFM OUTDOOR AIR THRU APPARATUS

APPARATUS DEWPOINT

ESHF: EFFECTIVE SENS HEAT FACTOR = EFFECTIVE ROOM SENS. HEAT / EFFECTIVE ROOM TOTAL HEAT =

ADP: INDICATED ADP = F SELECTED ADP = F

DEHUMIDIFIED AIR QUANTITY

TEMP RISE: (1– BF) × (T_RM F – T_ADP F) = F

DEHUM. CFM: EFFECTIVE ROOM SENS. HEAT / 1.08 × F_TEMP. RISE = CFM_DA

OUTLET TEMP. DIFF.: ROOM SENS. HEAT / 1.08 × CFM_DA = F (RM–OUTLET AIR)*

SUPPLY AIR QUANTITY

SUPPLY CFM: 3240 ROOM SENS. HEAT / 1.08 × 20 F DESIRED DIFF = 150 CFM_SA

BYPASS CFM: CFM_SA – CFM_DA = CFM_BA

RESULTING ENT & LVG CONDITIONS AT APPARATUS

EDB: T_RM F + CFM_DA / CFM† × (T_OA F – T_RM F) = T_EDB F

LDB: T_ADP F + BF × (T_EDB F – T_ADP F) = T_LDB F

FROM PSYCH. CHART: T_EWB F, T_LWB F

NOTES

SA = 150 CFM

OA = 30 "

TH = 3,535 BTUH

*IF THIS ΔT IS TOO HIGH, DETERMINE SUPPLY CFM FOR DESIRED DIFFERENCE BY SUPPLY AIR QUANTITY FORMULA.
†WHEN BYPASSING A MIXTURE OF OUTDOOR AND RETURN AIR, USE SUPPLY CFM. WHEN BYPASSING RETURN AIR ONLY, USE DEHUMIDIFIED CFM.

E-5024

AIR CONDITIONING LOAD ESTIMATE (REPRODUCED BY PERMISSION OF CARRIER CORPORATION)

Keller & Gannon
Engineers-Architects

COMPUTATION SHEET

COMPUTED BY: EDT
CHECKED BY:
DATE: APR 1992 19
REV. 19

OPEN OFFICE
MEZZ. FLR.
(35)

PROJECT: LBL-ALS MEZZ. FLR.
SHEET NO. 43 OF 47 SHEETS

Space Used For
Size 70 FT × 62 FT = 432 SQ FT × = CU FT

ITEM	AREA OR QUANTITY	SUN GAIN OR TEMP. DIFF.	FACTOR	BTU/HOUR
SOLAR GAIN—GLASS				
Glass	SQ FT ×	×		
Glass	SQ FT ×	×		
Glass	SQ FT ×	×		
Glass	SQ FT ×	×		
Skylight	SQ FT ×	×		
SOLAR & TRANS. GAIN—WALLS & ROOF				
Wall	SQ FT ×	×		
Wall	SQ FT ×	×		
Wall	SQ FT ×	×		
Wall	SQ FT ×	×		
Roof-Sun	432 SQ FT ×	37 ×	0.05	800
Roof-Shaded	SQ FT ×	×		
TRANS. GAIN—EXCEPT WALLS & ROOF				
All Glass	SQ FT ×	×		
Partition	SQ FT ×	×		
Ceiling	SQ FT ×	×		
Floor	SQ FT ×	×		
Infiltration	CFM ×	× 1.08		
INTERNAL HEAT				
People	6 PEOPLE ×	215		1290
Power	432 × (6 PO) ~~HP OR KW~~ ×	3.4		5615
Lights	432 × 2.5 W/SF WATTS × 3.4 ×			2940
Appliances, Etc.		×		
Additional Heat Gains		×		
		SUB TOTAL		14465
Storage	SQ FT ×	× (–)		
		SUB TOTAL		
Safety Factor	5 %			725
		ROOM SENSIBLE HEAT		15170
SUPPLY DUCT HEAT GAIN	SUPPLY DUCT % + LEAK. LOSS	FAN % + H. P. %		
Outdoor Air	CFM ×	F ×	BF × 1.08	
		EFFECTIVE ROOM SENSIBLE HEAT		
LATENT HEAT				
Infiltration	CFM ×	GR/LB × 0.68		
People	PEOPLE ×			
Steam	LB/HR × 1050			
Appliances, Etc.				
Additional Heat Gains				
Vapor Trans.	SQ × 1/100 ×	GR/LB ×		
		SUB TOTAL		
Safety Factor	%			
		ROOM LATENT HEAT		
SUPPLY DUCT LEAKAGE LOSS		%		
Outdoor Air	CFM ×	GR/LB ×	BF × 0.68	
		EFFECTIVE ROOM LATENT HEAT		
		EFFECTIVE ROOM TOTAL HEAT		
OUTDOOR AIR HEAT				
Sensible:	90 CFM ×	9 F × (1–	0 BF) × 1.08	875
Latent:	CFM ×	GR/LB × (1–	BF) × 0.68	
RETURN DUCT HEAT GAIN	RETURN DUCT % + LEAK. GAIN	HP % + PUMP	SUB TOTAL DEHUM. & % + PIPE LOSS %	
		GRAND TOTAL HEAT		16045

Estimate for — LOCAL TIME / SUN TIME
Peak Load — LOCAL TIME / SUN TIME
Hours of Operation

CONDITIONS	DB	WB	% RH	DP	GR/LB
OUTDOOR (OA)	85				
ROOM (RM)	76				
DIFFERENCE	9				

OUTDOOR AIR

VENTILATION: 6 PEOPLE × 15 CFM/PERSON = 90
SQ FT × CFM/SQ FT =
CFM VENTILATION

INFILTRATION: SWINGING REVOLVING DOORS PEOPLE × CFM/PERSON =
OPEN DOORS DOORS × CFM/DOOR =
EXHAUST FAN
CRACK FEET × CFM/FT =
CFM INFILTRATION

CFM OUTDOOR AIR THRU APPARATUS

APPARATUS DEWPOINT

ESHF: EFFECTIVE SENS HEAT FACTOR = EFFECTIVE ROOM SENS. HEAT / EFFECTIVE ROOM TOTAL HEAT =

ADP: INDICATED ADP = F SELECTED ADP = F

DEHUMIDIFIED AIR QUANTITY

TEMP RISE: (1– BF) × (T_{RM} F – T_{ADP} F) = F

DEHUM. CPM: EFFECTIVE ROOM SENS. HEAT / 1.08 × $F_{TEMP. RISE}$ = CFM_{DA}

OUTLET TEMP. DIFF.: ROOM SENS. HEAT / 1.08 × CFM_{DA} = F (RM–OUTLET AIR)*

SUPPLY AIR QUANTITY

SUPPLY CPM: 15,170 ROOM SENS. HEAT / 1.08 × 20 F DESIRED DIFF = 705 CFM_{SA}

BYPASS CPM: CFM_{SA} – CFM_{DA} = CFM_{BA}

RESULTING ENT & LVG CONDITIONS AT APPARATUS

EDB: T_{RM} F + (CFM_{DA} / CFM†) × (T_{OA} F – T_{RM} F) = T_{EDB} F

LDB: T_{ADP} F + BF × (T_{EDB} F – T_{ADP} F) = T_{LDB} F

FROM PSYCH. CHART: T_{EWB} F, T_{LWB} F

NOTES

S.A. = 705 CFM.
O.A. = 90 "
TH = 16,045 BTUH

*IF THIS ΔT IS TOO HIGH, DETERMINE SUPPLY CPM FOR DESIRED DIFFERENCE BY SUPPLY AIR QUANTITY FORMULA.
†WHEN BYPASSING A MIXTURE OF OUTDOOR AND RETURN AIR, USE SUPPLY CPM. WHEN BYPASSING RETURN AIR ONLY, USE DEHUMIDIFIED CPM.

E-5024

AIR CONDITIONING LOAD ESTIMATE (REPRODUCED BY PERMISSION OF CARRIER CORPORATION)

Keller & Gannon
Engineers-Architects

COMPUTATION SHEET

COMPUTED BY EDT
CHECKED BY
DATE APR 1992 19
REV. 19

STORAGE
MEZZ FLR.

PROJECT CAL-ALS
MEZZ. FLR

SHEET NO. 44 OF 47 SHEETS

Space Used For
Size 8 × 14 = 112 SQ FT × 14 = 1568 CU FT

ITEM	AREA OR QUANTITY	SUN GAIN OR TEMP. DIFF.	FACTOR	BTU/HOUR
SOLAR GAIN—GLASS				
Glass	SQ FT ×		×	
Glass	SQ FT ×		×	
Glass	SQ FT ×		×	
Glass	SQ FT ×		×	
Skylight	SQ FT ×		×	
SOLAR & TRANS. GAIN—WALLS & ROOF				
Wall	SQ FT ×		×	
Wall	SQ FT ×		×	
Wall	SQ FT ×		×	
Wall	SQ FT ×		×	
Roof-Sun	SQ FT ×		×	
Roof-Shaded	SQ FT ×		×	
TRANS. GAIN—EXCEPT WALLS & ROOF				
All Glass	SQ FT ×		×	
Partition	SQ FT ×		×	
Ceiling	SQ FT ×		×	
Floor	SQ FT ×		×	
Infiltration	CFM ×		× 1.08	
INTERNAL HEAT				
People	PEOPLE ×			
Power	HP OR KW ×			
Lights	WATTS × 3.4 ×			
Appliances, Etc.			×	
Additional Heat Gains			×	
			SUB TOTAL	
Storage	SQ FT ×		× (–)	
			SUB TOTAL	
Safety Factor	%			
			ROOM SENSIBLE HEAT	
SUPPLY DUCT HEAT GAIN	SUPPLY DUCT % + LEAK. LOSS	FAN % + H. P.	%	
Outdoor Air	CFM ×	F ×	BF × 1.08	
			EFFECTIVE ROOM SENSIBLE HEAT	
LATENT HEAT				
Infiltration	CFM ×		GR/LB × 0.68	
People	PEOPLE ×			
Steam	LB/HR × 1050			
Appliances, Etc.				
Additional Heat Gains				
Vapor Trans.	SQ × 1/100 ×	GR/LB ×		
			SUB TOTAL	
Safety Factor	%			
			ROOM LATENT HEAT	
SUPPLY DUCT LEAKAGE LOSS			%	
Outdoor Air	CFM ×	GR/LB ×	BF × 0.68	
			EFFECTIVE ROOM LATENT HEAT	
			EFFECTIVE ROOM TOTAL HEAT	
OUTDOOR AIR HEAT				
Sensible:	CFM ×		F × (1– BF) × 1.08	
Latent:	CFM ×	GR/LB × (1–	BF) × 0.68	
RETURN DUCT HEAT GAIN	RETURN DUCT % + LEAK. GAIN	HP % + PUMP	SUB TOTAL DEHUM. & % + PIPE LOSS %	
			GRAND TOTAL HEAT	

Estimate for LOCAL TIME SUN TIME | Peak Load LOCAL TIME SUN TIME

Hours of Operation

CONDITIONS	DB	WB	% RH	DP	GR/LB
OUTDOOR (OA)					
ROOM (RM)					
DIFFERENCE					

OUTDOOR AIR

VENTILATION: ____ PEOPLE × ____ CFM/PERSON = ____
____ SQ FT × ____ CFM/SQ FT = ____
CFM VENTILATION

INFILTRATION: SWINGING REVOLVING DOORS ____ PEOPLE × ____ CFM/PERSON = ____
OPEN DOORS ____ DOORS × ____ CFM/DOOR = ____
EXHAUST FAN ____
CRACK ____ FEET × ____ CFM/FT = ____
CFM INFILTRATION

CFM OUTDOOR AIR THRU APPARATUS

APPARATUS DEWPOINT

ESHF: EFFECTIVE SENS HEAT FACTOR = EFFECTIVE ROOM SENS. HEAT / EFFECTIVE ROOM TOTAL HEAT = ____

ADP: INDICATED ADP = ____ F SELECTED ADP = ____ F

DEHUMIDIFIED AIR QUANTITY

TEMP RISE: (1– ____ BF) × (T_{RM} ____ F – T_{ADP} ____ F) = ____ F

DEHUM. CPM: EFFECTIVE ROOM SENS. HEAT / (1.08 × $F_{TEMP. RISE}$) = ____ CFM_{DA}

OUTLET TEMP. DIFF.: ROOM SENS. HEAT / (1.08 × CFM_{DA}) = ____ $F_{(RM-OUTLET\ AIR)}$*

SUPPLY AIR QUANTITY

SUPPLY CPM: ROOM SENS. HEAT / (1.08 × F DESIRED DIFF) = ____ CFM_{SA}

BYPASS CPM: ____ CFM_{SA} – ____ CFM_{DA} = ____ CFM_{BA}

RESULTING ENT & LVG CONDITIONS AT APPARATUS

EDB: T_{RM} ____ F + (CFM_{DA} / CFM†) × (T_{OA} ____ F – T_{RM} ____ F) = T_{EDB} ____ F

LDB: T_{ADP} ____ F + ____ BF × (T_{EDB} ____ F – T_{ADP} ____ F) = T_{LDB} ____ F

FROM PSYCH. CHART: T_{EWB} ____ F, T_{LWB} ____ F

NOTES

GAC:

$$CPM = \frac{1568 \times 6}{60} = 160\ CPM.$$

*IF THIS ΔT IS TOO HIGH, DETERMINE SUPPLY CPM FOR DESIRED DIFFERENCE BY SUPPLY AIR QUANTITY FORMULA.

†WHEN BYPASSING A MIXTURE OF OUTDOOR AND RETURN AIR, USE SUPPLY CPM. WHEN BYPASSING RETURN AIR ONLY, USE DEHUMIDIFIED CPM.

E-5024

AIR CONDITIONING LOAD ESTIMATE (REPRODUCED BY PERMISSION OF CARRIER CORPORATION)

Keller & Gannon
Engineers–Architects

31

COMPUTATION SHEET

COMPUTED BY EDT
CHECKED BY
DATE APR 1992 19
REV. 19

LAB
MEZZ. PLR.
(21)

PROJECT UBC-AUS
MEZZ. PLR.
SHEET NO. 45 OF 47 SHEETS

Space Used For
Size TOTAL AREA = 496 SQ FT × 12 = 6944 CU FT

ITEM	AREA OR QUANTITY	SUN GAIN OR TEMP. DIFF.	FACTOR	BTU/HOUR
SOLAR GAIN–GLASS				
Glass	SQ FT ×	×		
Glass	SQ FT ×	×		
Glass	SQ FT ×	×		
Glass	SQ FT ×	×		
Skylight	SQ FT ×	×		
SOLAR & TRANS. GAIN–WALLS & ROOF				
Wall	SQ FT ×	×		
Wall	SQ FT ×	×		
Wall	SQ FT ×	×		
Wall	SQ FT ×	×		
Roof-Sun	496 SQ FT ×	37 ×	0.05	920
Roof-Shaded	SQ FT ×	×		
TRANS. GAIN–EXCEPT WALLS & ROOF				
All Glass	SQ FT ×	×		
Partition	SQ FT ×	×		
Ceiling	SQ FT ×	×		
Floor	SQ FT ×	×		
Infiltration	CFM ×	×	1.08	
INTERNAL HEAT				
People	6	PEOPLE ×	315	1890
Power	496 × 2.5 W/SF	~~EHP OR KW~~ ×	3.4	4200
Lights	496 × 2 W/SF	WATTS × 3.4 ×		3375
Appliances, Etc.		×		
Additional Heat Gains		×		
		SUB TOTAL		10925
Storage	SQ FT ×	× (–)		
		SUB TOTAL		
Safety Factor	5 %			520
		ROOM SENSIBLE HEAT		10925
SUPPLY DUCT HEAT GAIN	SUPPLY DUCT % + LEAK. LOSS	FAN % + H. P. %		
Outdoor Air	CFM ×	F ×	BF × 1.08	
		EFFECTIVE ROOM SENSIBLE HEAT		
LATENT HEAT				
Infiltration	CFM ×	GR/LB × 0.68		
People	PEOPLE ×			
Steam	LB/HR × 1050			
Appliances, Etc.				
Additional Heat Gains				
Vapor Trans.	SQ × 1/100 ×	GR/LB ×		
		SUB TOTAL		
Safety Factor	%			
		ROOM LATENT HEAT		
SUPPLY DUCT LEAKAGE LOSS		%		
Outdoor Air	CFM ×	GR/LB ×	BF × 0.68	
		EFFECTIVE ROOM LATENT HEAT		
		EFFECTIVE ROOM TOTAL HEAT		
OUTDOOR AIR HEAT				
Sensible:	175 CFM ×	9 F × (1–	0 BF) × 1.08	17740
Latent:	CFM ×	GR/LB × (1–	BF) × 0.68	
RETURN DUCT HEAT GAIN	RETURN DUCT % + LEAK. GAIN	HP % + PUMP	SUB TOTAL DEHUM. & % + PIPE LOSS %	
		GRAND TOTAL HEAT		28665

Estimate for LOCAL TIME SUN TIME | Peak Load LOCAL TIME SUN TIME

Hours of Operation

CONDITIONS	DB	WB	% RH	DP	GR/LB
OUTDOOR (OA)	65				
ROOM (RM)	76				
DIFFERENCE	9				

OUTDOOR AIR

VENTILATION: PEOPLE = CFM/PERSON = ; SQ FT = CFM/SQ FT = ; CFM VENTILATION

INFILTRATION: SWINGING REVOLVING DOORS PEOPLE = CFM/PERSON = ; OPEN DOORS DOORS = CFM/DOOR = ; EXHAUST FAN ; CRACK FEET = CFM/FT = ; CFM INFILTRATION

CFM OUTDOOR AIR THRU APPARATUS

APPARATUS DEWPOINT

ESHF: EFFECTIVE SENS HEAT FACTOR = EFFECTIVE ROOM SENS. HEAT / EFFECTIVE ROOM TOTAL HEAT =

ADP: INDICATED ADP = F SELECTED ADP = F

DEHUMIDIFIED AIR QUANTITY

TEMP RISE: (1– BF) × (T_{RM} F – T_{ADP} F) = F

DEHUM. CFM: EFFECTIVE ROOM SENS. HEAT / (1.08 × $F_{TEMP. RISE}$) = CFM_{DA}

OUTLET TEMP. DIFF.: ROOM SENS. HEAT / (1.08 × CFM_{DA}) = $F_{(RM-OUTLET AIR)}$*

SUPPLY AIR QUANTITY

SUPPLY CFM: 10,925 ROOM SENS. HEAT / (1.08 × 20 F DESIRED DIFF) = 510 CFM_{SA}

BYPASS CFM: CFM_{SA} – CFM_{DA} = CFM_{BA}

RESULTING ENT & LVG CONDITIONS AT APPARATUS

EDB: T_{RM} F + (CFM_{DA} / CFM1) × (T_{OA} F – T_{RM} F) = T_{EDB} F

LDB: T_{ADP} F + BF × (T_{EDB} F – T_{ADP} F) = T_{LDB} F

FROM PSYCH. CHART: T_{EWB} F, T_{LWB} F

NOTES

HOOD REQUIREMENT:
1000 CFM/HOOD
2 HOODS = 2000 CFM
ROOM REQUIREMENT:
1875 CFM
INFILTRATION:
175 CFM (CONDITIONED)
TH = 28,665 BTUH.

*IF THIS ΔT IS TOO HIGH, DETERMINE SUPPLY CFM FOR DESIRED DIFFERENCE BY SUPPLY AIR QUANTITY FORMULA.

WHEN BYPASSING A MIXTURE OF OUTDOOR AND RETURN AIR, USE SUPPLY CFM. WHEN BYPASSING RETURN AIR ONLY, USE DEHUMIDIFIED CFM.

E-5024

AIR CONDITIONING LOAD ESTIMATE (REPRODUCED BY PERMISSION OF CARRIER CORPORATION)

Keller & Gannon
Engineers-Architects

32

COMPUTATION SHEET

COMPUTED BY EDT
CHECKED BY
DATE APR 1992 19
REV. 19

TEAM AREA
MEZZ. PLR.
4r

PROJECT LBL-AUS
MEZZ. PLR.
SHEET NO. 46 OF 47 SHEETS

Space Used For
Size 10 BL AREA = 286 SQ FT × 14 = 4004 CU FT

ITEM	AREA OR QUANTITY	SUN GAIN OR TEMP. DIFF.	FACTOR	BTU/HOUR
SOLAR GAIN—GLASS				
NW Glass G(3×6)	SQ FT × 163	× 0.92×0.8		5715
Glass	SQ FT ×	×		
Glass	SQ FT ×	×		
Glass	SQ FT ×	×		
Skylight	SQ FT ×	×		
SOLAR & TRANS. GAIN—WALLS & ROOF				
NW Wall (4.5×14)-108	SQ FT × 70	× 0.07		635
Wall	SQ FT ×	×		
Wall	SQ FT ×	×		
Wall	SQ FT ×	×		
Roof-Sun 286	SQ FT × 37	× 0.05		520
Roof-Shaded	SQ FT ×	×		
TRANS. GAIN—EXCEPT WALLS & ROOF				
All Glass 108	SQ FT × 4	× 1.12 × 0.8		375
Partition	SQ FT ×	×		
Ceiling	SQ FT ×	×		
Floor	SQ FT ×	×		
Infiltration	CFM ×	× 1.08		
INTERNAL HEAT				
People 5	PEOPLE × 215			1575
Power	HP OR KW ×			
Lights 286 × 2.0/ft	WATTS × 3.4 ×			1945
Appliances, Etc.		×		
Additional Heat Gains		×		
		SUB TOTAL		10995
Storage	SQ FT ×	× (–)		
		SUB TOTAL		
Safety Factor 5	%			550
		ROOM SENSIBLE HEAT		11545
SUPPLY DUCT HEAT GAIN	SUPPLY DUCT % + LEAK. LOSS	FAN % + H. P. %		
Outdoor Air	CFM ×	F ×	BF × 1.08	
		EFFECTIVE ROOM SENSIBLE HEAT		
LATENT HEAT				
Infiltration	CFM ×		GR/LB × 0.68	
People	PEOPLE ×			
Steam	LB/HR × 1050			
Appliances, Etc.				
Additional Heat Gains				
Vapor Trans.	SQ × 1/100 ×		GR/LB ×	
		SUB TOTAL		
Safety Factor	%			
		ROOM LATENT HEAT		
SUPPLY DUCT LEAKAGE LOSS			%	
Outdoor Air	CFM ×	GR/LB ×	BF × 0.68	
		EFFECTIVE ROOM LATENT HEAT		
		EFFECTIVE ROOM TOTAL HEAT		
OUTDOOR AIR HEAT				
Sensible: 75	CFM × 4	F × (1– 0	BF) × 1.08	325
Latent:	CFM ×	GR/LB × (1–	BF) × 0.68	
RETURN DUCT HEAT GAIN	RETURN DUCT % + LEAK. GAIN	HP % + PUMP	SUB TOTAL DEHUM. & % + PIPE LOSS %	
		GRAND TOTAL HEAT		11870

Estimate for LOCAL TIME SUN TIME | Peak Load LOCAL TIME SUN TIME

Hours of Operation

CONDITIONS	DB	WB	% RH	DP	GR/LB
OUTDOOR (OA)	80				
ROOM (RM)	76				
DIFFERENCE	4				

OUTDOOR AIR

VENTILATION: 5 PEOPLE × 15 CFM/PERSON = 75
SQ FT × CFM/SQ FT =
CFM VENTILATION

INFILTRATION: SWINGING REVOLVING DOORS PEOPLE × CFM/PERSON =
OPEN DOORS DOORS × CFM/DOOR =
EXHAUST FAN
CRACK FEET × CFM/FT =
CFM INFILTRATION

CFM OUTDOOR AIR THRU APPARATUS

APPARATUS DEWPOINT

ESHF: EFFECTIVE SENS HEAT FACTOR = EFFECTIVE ROOM SENS. HEAT / EFFECTIVE ROOM TOTAL HEAT =

ADP: INDICATED ADP = F SELECTED ADP = F

DEHUMIDIFIED AIR QUANTITY

TEMP RISE: (1– BF) × (T_{RM} F – T_{ADP} F) = F

DEHUM. CPM: EFFECTIVE ROOM SENS. HEAT / (1.08 × $F_{TEMP. RISE}$) = CFM_{DA}

OUTLET TEMP. DIFF.: ROOM SENS. HEAT / (1.08 × CFM_{DA}) = $F_{(RM-OUTLET\ AIR)}$*

SUPPLY AIR QUANTITY

SUPPLY CPM: 11,545 ROOM SENS. HEAT / (1.08 × 20 F DESIRED DIFF) = 535 CFM_{SA}

BYPASS CPM: CFM_{SA} – CFM_{DA} = CFM_{BA}

RESULTING ENT & LVG CONDITIONS AT APPARATUS

EDB: T_{RM} F + (CFM_{OA} / CFMT) × (T_{OA} F – T_{RM} F) = T_{EDB} F

LDB: T_{ADP} F + BF × (T_{EDB} F – T_{ADP} F) = T_{LDB} F
FROM PSYCH. CHART: T_{EWB} F, T_{LWB} F

NOTES

SA = 535 CFM.
OA = 75 "
TH = 11,870 BTUH.

*IF THIS ΔT IS TOO HIGH, DETERMINE SUPPLY CPM FOR DESIRED DIFFERENCE BY SUPPLY AIR QUANTITY FORMULA.
†WHEN BYPASSING A MIXTURE OF OUTDOOR AND RETURN AIR, USE SUPPLY CPM. WHEN BYPASSING RETURN AIR ONLY, USE DEHUMIDIFIED CPM.

E-5024

AIR CONDITIONING LOAD ESTIMATE (REPRODUCED BY PERMISSION OF CARRIER CORPORATION)

Keller & Gannon
Engineers–Architects

COMPUTATION SHEET

COMPUTED BY EDT
CHECKED BY
DATE APR 1992 19
REV. 19

CORRIDOR
MEZZ. FLR.

PROJECT UKL-AUS
MEZZ. FLR.

SHEET NO. 47 OF 47 SHEETS

Space Used For
Size 6 × 330 = 1980 SQ FT × 14 = 27,720 CU FT

ITEM	AREA OR QUANTITY	SUN GAIN OR TEMP. DIFF.	FACTOR	BTU/HOUR
SOLAR GAIN–GLASS				
Glass	SQ FT ×		×	
Glass	SQ FT ×		×	
Glass	SQ FT ×		×	
Glass	SQ FT ×		×	
Skylight	SQ FT ×		×	
SOLAR & TRANS. GAIN–WALLS & ROOF				
Wall	SQ FT ×		×	
Wall	SQ FT ×		×	
Wall	SQ FT ×		×	
Wall	SQ FT ×		×	
Roof-Sun	1980 SQ FT ×	37	× 0.05	5665
Roof-Shaded	SQ FT ×		×	
TRANS. GAIN–EXCEPT WALLS & ROOF				
All Glass	SQ FT ×		×	
Partition	SQ FT ×		×	
Ceiling	SQ FT ×		×	
Floor	SQ FT ×		×	
Infiltration	CFM ×		× 1.08	
INTERNAL HEAT				
People	PEOPLE ×			
Power	HP OR KW ×			
Lights	1980 × 1.5 W/SF	WATTS × 3.4 ×		10100
Appliances, Etc.			×	
Additional Heat Gains			×	
			SUB TOTAL	13765
Storage	SQ FT ×		× (–)	
			SUB TOTAL	
Safety Factor	5 %			690
			ROOM SENSIBLE HEAT	14455
SUPPLY DUCT HEAT GAIN	SUPPLY DUCT % + LEAK. LOSS	FAN % + H. P.	%	
Outdoor Air	CFM ×	F ×	BF × 1.08	
			EFFECTIVE ROOM SENSIBLE HEAT	
LATENT HEAT				
Infiltration	CFM ×		GR/LB × 0.68	
People	PEOPLE ×			
Steam	LB/HR × 1050			
Appliances, Etc.				
Additional Heat Gains				
Vapor Trans.	SQ × 1/100 ×		GR/LB ×	
			SUB TOTAL	
Safety Factor	%			
			ROOM LATENT HEAT	
SUPPLY DUCT LEAKAGE LOSS			%	
Outdoor Air	CFM ×	GR/LB ×	BF × 0.68	
			EFFECTIVE ROOM LATENT HEAT	
			EFFECTIVE ROOM TOTAL HEAT	
OUTDOOR AIR HEAT				
Sensible:	CFM ×	F × (1–	BF) × 1.08	
Latent:	CFM ×	GR/LB × (1–	BF) × 0.68	
RETURN DUCT HEAT GAIN	RETURN DUCT % + LEAK. GAIN	HP % + PUMP	SUB TOTAL DEHUM. & % + PIPE LOSS %	
			GRAND TOTAL HEAT	

Estimate for LOCAL TIME SUN TIME | Peak Load LOCAL TIME SUN TIME

Hours of Operation

CONDITIONS	DB	WB	% RH	DP	GR/LB
OUTDOOR (OA)	85				
ROOM (RM)	76				
DIFFERENCE	9				

OUTDOOR AIR

VENTILATION: PEOPLE = CFM/PERSON = ; SQ FT = CFM/SQ FT = ; CFM VENTILATION

INFILTRATION: SWINGING REVOLVING DOORS PEOPLE = CFM/PERSON = ; OPEN DOORS DOORS = CFM/DOOR = ; EXHAUST FAN ; CRACK FEET = CFM/FT = ; CFM INFILTRATION

CFM OUTDOOR AIR THRU APPARATUS

APPARATUS DEWPOINT

ESHF: EFFECTIVE SENS HEAT FACTOR = EFFECTIVE ROOM SENS. HEAT / EFFECTIVE ROOM TOTAL HEAT =

ADP: INDICATED ADP = F SELECTED ADP = F

DEHUMIDIFIED AIR QUANTITY

TEMP RISE: (1– BF) × (T_{RM} F – T_{ADP} F) = F

DEHUM. CPM: EFFECTIVE ROOM SENS. HEAT / (1.08 × $F_{TEMP. RISE}$) = CFM_{DA}

OUTLET TEMP. DIFF.: ROOM SENS. HEAT / (1.08 × CFM_{DA}) = F (RM–OUTLET AIR)*

SUPPLY AIR QUANTITY

SUPPLY CPM: 14,455 ROOM SENS. HEAT / (1.08 × 70 F DESIRED DIFF) = 670 CFM_{SA}

BYPASS CPM: CFM_{SA} – CFM_{DA} = CFM_{BA}

RESULTING ENT & LVG CONDITIONS AT APPARATUS

EDB: T_{RM} F + (CFM_{DA} / CFM†) × (T_{OA} F – T_{RM} F) = T_{EDB} F

LDB: T_{ADP} F + BF × (T_{EDB} F – T_{ADP} F) = T_{LDB} F

FROM PSYCH. CHART: T_{EWB} F, T_{LWB} F

NOTES

*IF THIS ΔT IS TOO HIGH, DETERMINE SUPPLY CPM FOR DESIRED DIFFERENCE BY SUPPLY AIR QUANTITY FORMULA.

†WHEN BYPASSING A MIXTURE OF OUTDOOR AND RETURN AIR, USE SUPPLY CPM. WHEN BYPASSING RETURN AIR ONLY, USE DEHUMIDIFIED CPM.

E-5024

AIR CONDITIONING LOAD ESTIMATE (REPRODUCED BY PERMISSION OF CARRIER CORPORATION)

ALS BEAMLINES INITIATIVE

Basis for Electrical Design

6. ELECTRICAL SYSTEMS

6.1 POWER SOURCE

Existing building distribution equipment will be used to supply power for lighting, receptacles, and mechanical loads. Emergency lighting will be provided by the existing system.

6.2 CHARACTERISTICS

Building voltages are 480/277 volt for large motors and lighting and 208Y/120 volts for other loads. Interior dry-type transformers will be provided for 208Y/120-volt loads.

6.3 ESTIMATED LOADS

The existing building power sources are adequate to feed the additional loads, that are estimated to be as follows:

Equipment	Connected Load (kVA)	Demand Factor (%)	Demand Load (kVA)
Lighting	75	100	75
Receptacles	98	40	39
HVAC	95	80	76
Water Heater	5	80	4
Emergency Lighting	6	100	6
Total	279		200
	(273) norm.		(194) norm.
	(6) emerg.		(6) emerg.

6.4 INTERIOR WIRING

All wiring will be installed in concealed conduit or electrical metallic tubing, except conduit in existing unfinished spaces will be exposed.

6.5 LIGHTING

Lighting fixture types and illumination intensities will be as follows:

Area	Lighting Fixture	Footcandles
*Conference	Commercial Fluorescent	50
Reception	Metal Halide and Track Lights	50
Corridor	Commercial Fluorescent	10
Kitchen	Commercial Fluorescent	20
Toilet Rooms	Commercial Fluorescent	20
Storage/Janitor	Commercial Fluorescent	20

*The conference room will have dimming controls to a maximum of 50 FC.

Area	Lighting Fixture	Footcandles
Secretary	Commercial Fluorescent	50
Library	Commercial Fluorescent	50
Office	Commercial Fluorescent	50
Mail Room	Commercial Fluorescent	20
Team Rooms	Metal Halide Downlights	50
Laboratories	Commercial Fluorescent	75

6.6 FIRE ALARM

A fire alarm system will be provided and will be designed in accordance with NFPA 101, Life Safety Code, DOE requirements, and LBL requirements. This system will transmit alarm signals to the site fire station in Building 48.

6.7 COMMUNICATIONS

Raceway systems will only be provided for the building-wide paging system, the telecommunication system, and the EMCS. Connection from the building-wide paging system terminal cabinet to future speaker outlets will be provided.

6.8 OTHER

The new fan-powered VAV units will be connected into the Firemen's Shutdown Control.

ALS BEAMLINES INITIATIVE

Cost Estimate Detail for Conventional Facilities

GOSLINER/McLEAN ASSOCIATES, INC.
580 MARKET STREET
SAN FRANCISCO, CA 94104
TEL 415 433 4897/FAX 415 433 2907

PROJECT BLDG 6 REMODEL LAWRENCE FOR U.CALIFORNIA
BERKELEY LABORATORY LOCATION BERKELEY, CA SHEET NO. 1 OF 19
ARCHITECT ENGINEER KELLER & GANNON DATE 4-15-92
CONCEPTUAL ESTIMATE

ALS OFFICES AND LIGHT LABORATORIES

SUMMARY

Description	Quantity	Unit	Unit Price	Totals
03100 CONCRETE FORMWORK				2796
03200 CONCRETE REINFORCEMENT				6888
03300 CAST-IN-PLACE CONCRETE				11621
03600 GROUTING				135
05120 STRUCTURAL STEEL				0
05300 STEEL DECKING				510
05340 METAL PANELS				8000
05500 METAL FABRICATIONS				116294
06200 CARPENTRY				33760
06400 CABINETWORK				8480
07253 SPRAY-ON FIREPROOFING				7728
07260 FIRESTOOPING				19900
07500 SINGLE PLY ROOFING REPAIR				5001
07600 FLASHING AND SHEETMETAL				2205
07920 SEALANTS				2794
08120 HOLLOW METAL DOORS AND FRAMES				43550
08210 WOOD DOORS				12650
08710 FINISH HARDWARE				24360
08800 GLAZING				52785
09250 GYPSUM BOARD WALL AND CEILING SYST				90552
09300 CERAMIC TILE				68513
09510 ACOUSTIC TREATMENT				137827
09650 RESILIENT FLOORING				42243
09685 CARPETING				32100
09900 PAINTING				32895
10100 MARKER BOARDS AND TACK BOARDS				1345
10162 TOILET PARTITIONS				2515
10400 IDENTIFYING DEVICES				1070
10500 LOCKERS				5250
10800 TOILET AND BATH ACCESSORIES				4450
10950 MISCELLANEOUS SPECIALTIES				7910
11130 PROJECTION SCREEN				3000
12503 WINDOW TREATMENT				15450
14200 HYDRAULIC ELEVATORS				140000
15300 FIRE PROTECTION				52198
15400 PLUMBING				340419
15550 HEATING, VENTILATING AND AIR CONDI				384275
15950 CONTROLS				108500
15990 AIR AND WATER BALANCING				4000
16000 ELECTRICAL				239803
Subtotal				2073770
GENERAL CONDITIONS				65035
Subtotal				2138805
PROFIT AND GENERAL OVERHEAD	18	%		384985
TOTAL ESTIMATED COST				2523790

GOSLINER/McLEAN ASSOCIATES, INC.
580 MARKET STREET
SAN FRANCISCO, CA 94104
TEL 415 433 4897/FAX 415 433 2907

PROJECT BLDG 6 REMODEL LAWRENCE FOR U.CALIFORNIA
BERKELEY LABORATORY LOCATION BERKELEY, CA SHEET NO. 2 OF 19
ARCHITECT ENGINEER KELLER & GANNON DATE 4-15-92
CONCEPTUAL ESTIMATE

Description	Quantity	Unit	Unit Price	Totals
01000 GENERAL CONDITIONS				
Job foreman	9	mo	5000	45000
Office trailer	9	mo	100.00	900
Mobile telephone	9	mo	300.00	2700
Pickups	9	mo	350.00	3150
Temp water service	1	lot	250.00	250
Water use	9	mo	100.00	900
Temp power service	1	lot	600.00	600
Power Use	9	mo	200.00	1800
Toilet units	18	mo	45.00	810
Performance bond .95%	1	lot	4845	4845
All-risk insurance .80%	1	lot	4080	4080
Total 01000				65035
03100 CONCRETE FORMWORK				
Form equipment pads	146	lf	5.75	840
Form curb at roof	192	lf	7.75	1488
Form floor opening at elevator	72	lf	6.50	468
Total 03100				2796
03200 CONCRETE REINFORCEMENT				
Dowel to E roof deck ALLOW	56	loc	50.00	2800
Dowel to E floor slab ALLOW	42	loc	75.00	3150
Reinforcing	1250	#	0.75	938
Total 03200				6888
03300 CAST-IN-PLACE CONCRETE				
Sawcut roof slab/deck	120	lf	5.00	600
Dispose of concrete waste	16	cy	16.00	256
Equipment pad concrete	36	cy	105.00	3780
Freight elevator/pit concrete	3	cy	105.00	315
Roof Curb concrete	46	cy	145.00	6670
Total 03300				11621
03600 GROUTING				
Nonshrink grout	60	lf	2.25	135
Total 03600				135

GOSLINER/McLEAN ASSOCIATES, INC.
580 MARKET STREET
SAN FRANCISCO, CA 94104
TEL 415 433 4897/FAX 415 433 2907

PROJECT BLDG 6 REMODEL LAWRENCE FOR U.CALIFORNIA
BERKELEY LABORATORY LOCATION BERKELEY, CA SHEET NO. 3 OF 19
ARCHITECT ENGINEER KELLER & GANNON DATE 4-15-92

CONCEPTUAL ESTIMATE

Description	Quantity	Unit	Unit Price	Totals
05120 STRUCTURAL STEEL - none shown				
05300 STEEL DECKING				
Seal roof openings in deck	60	lf	8.50	510
Total 05300				510
05340 METAL PANELS				
Fan enclosure panels/frame on roof	600	sfsa	12.5	7500
Access service door	2	ea	250	500
Total 05340				8000
05500 METAL FABRICATIONS				
Beam reinforcing - bottom flange				
Clean off E spray-on fireproofing	60	mh	65.00	3900
Remove/replace E mechanical/electrical	1	allow	25000	25000
Shore beams each side	715	lf	6.00	4290
Material fabricated FOB	22066	#	1.75	38616
Field welds ALLOW	715	lf	25.00	17875
Elevator steel - floor openings	1000	#	2.25	2250
Stair landing steel brace	90	#	2.25	203
Glass wall frame steel	2000	#	2.25	4500
Miscellaneous steel framing	3000	#	2.25	6750
Add for connections	1000	#	4.00	4000
3ft Checkerplate tread free standing	36	rsrs	225.00	8100
4 Pipe stair railing	18	lf	45.00	810
Total 05500				116294
06200 CARPENTRY				
Rem E wood frame partitions	600	sf	1.60	960
Install temporary partitions	1600	sf	3.00	4800
Install interior doors/hardware	80	ea	150.00	12000
Install rough hardware	1	lot	6000	6000
Install miscellaneous specialties	1	lot	10000	10000
Total 06200				33760
06400 CABINETWORK				
Kitchen base cabinets w/lam pl top	27	lf	165.00	4455
Vanity counters	35	lf	115.00	4025
Total 06400				8480

GOSLINER/McLEAN ASSOCIATES, INC.
580 MARKET STREET
SAN FRANCISCO, CA 94104
TEL 415 433 4897/FAX 415 433 2907

PROJECT BLDG 6 REMODEL LAWRENCE FOR U.CALIFORNIA
BERKELEY LABORATORY LOCATION BERKELEY, CA SHEET NO. 4 OF 19
ARCHITECT ENGINEER KELLER & GANNON DATE 4-15-92
CONCEPTUAL ESTIMATE

Description	Quantity	Unit	Unit Price	Totals
07253 SPRAY-ON FIREPROOFING				
Repair const. damaged E fp at decks/stl	17173	sf	0.45	7728
Total 07253				7728
07260 FIRESTOPPING				
In-fill at rated walls	756	lf	25.00	18900
Patch siding at temporary work entry	1	lot	1000.00	1000
Total 07260				19900
07500 SINGLE PLY ROOFING REPAIR				
Re-roof at equipment curbs/opgs	4	sqrs	275.00	1100
Re-roof at equipment screen panels	8	sqrs	275.00	2200
Service walkway 2ft sq pavers	486	sf	3.50	1701
Total 07500				5001
07600 FLASHING AND SHEETMETAL				
Flash at equipment curbs/openings	144	lf	7.50	1080
Flash at equipment screen panels	150	lf	7.50	1125
Total 07600				2205
07920 SEALANTS				
Caulk roof flashings	294	lf	1.00	294
Miscellaneous caulking	1	lot	2500	2500
Total 07920				2794
08100 HOLLOW METAL DOORS AND FRAMES				
6070 HM door/frame 1hr	8	ea	1750.00	14000
3070 HM door/frame 1hr	18	ea	875.00	15750
3070 HM frame	46	ea	300.00	13800
Total 08100				43550
08210 WOOD DOORS				
3070x1-3/4in FL SC WD door	46	ea	275.00	12650
Total 08210				12650
08510 STEEL WINDOWS - none shown				

GOSLINER/McLEAN ASSOCIATES, INC.
580 MARKET STREET
SAN FRANCISCO, CA 94104
TEL 415 433 4897/FAX 415 433 2907

PROJECT BLDG 6 REMODEL LAWRENCE FOR U.CALIFORNIA
BERKELEY LABORATORY LOCATION BERKELEY, CA SHEET NO. 5 OF 19
ARCHITECT ENGINEER KELLER & GANNON DATE 4-15-92
CONCEPTUAL ESTIMATE

Description	Quantity	Unit	Unit Price	Totals
08710 FINISH HARDWARE				
Double door 1hr allow	8	ea	445.00	3560
Interior door 1hr ALLOW	64	ea	325.00	20800
Total 08710				24360
08800 GLAZING				
Fire rated glass wall/exit door str #1	459	sf	115.00	52785
Total 08800				52785
09250 GYPSUM BOARD WALL AND CEILING SYSTEMS				
Stl stud wall 13ft-6in w/gypbd ea side	15080	sf	3.75	56550
Stl stud wall 9ft-6in w/gypbd ea side	6903	sf	3.60	24851
Ceiling suspension sys - toilets/stairs	630	sf	2.25	1418
Tape/finish E gypboard walls	11898	sf	0.65	7734
Total 09250				90552
09300 CERAMIC TILE				
Mudset ceramic tile flooring	630	sf	10.00	6300
Thinset ceramic tile wainscoat	7110	sf	8.75	62213
Total 09300				68513
09510 ACOUSTICAL TREATMENT				
2x4 Exp T acoustic tile clg offices	8875	sf	1.95	17306
Accoustic wall panel - office/conf	600	sf	4.00	2400
Plenum mask alum w/accoust board susp	1962	sf	15.25	29921
Ceiling suspension system - corridors	2646	sf	8.75	23153
Ceiling suspension system - labs	5964	sf	10.00	59640
Accoustic board walls/clg mech room	1442	sf	3.75	5408
Total 09510				137827
09650 RESILIENT FLOORING				
1/8in Vinyl compostion tile	10463	sf	3.35	35051
4in Topset rubber base	4495	lf	1.60	7192
Total 09650				42243
09685 CARPET				
Med weight carpet ALLOW	1070	sy	30.00	32100
Total 09685				32100

GOSLINER/McLEAN ASSOCIATES, INC.
580 MARKET STREET
SAN FRANCISCO, CA 94104
TEL 415 433 4897/FAX 415 433 2907

PROJECT BLDG 6 REMODEL LAWRENCE FOR U.CALIFORNIA
BERKELEY LABORATORY LOCATION BERKELEY, CA SHEET NO. 6 OF 19
ARCHITECT ENGINEER KELLER & GANNON DATE 4-15-92

CONCEPTUAL ESTIMATE

Description	Quantity	Unit	Unit Price	Totals
09900 PAINTING				
Gyp board ceilings	630	sf	0.60	378
Gyp board walls	43966	sf	0.55	24181
3070 Doors & frames	80	ea	45.00	3600
Ceiling cavity - labs/corridors	8610	sf	0.55	4736
Total 09900				32895
10100 MARKER BOARDS AND TACK BOARDS				
Porcelain/steel marker boards	4	ea	75	300
Aluminum/fabric tack boards	11	ea	95	1045
Total 10100				1345
10162 TOILET PARTITIONS				
Flr mntd toilet partition	5	ea	375.00	1875
Urinal screen	1	ea	150.00	150
Shower enclosure	2	ea	245.00	490
Total 10162				2515
10400 IDENTIFYING DEVICES				
Plastic room numbers	8	ea	45.00	360
Toilet rooms	2	ea	65.00	130
Floor plan plaque	1	ea	175.00	175
Directional/no smoking signs	4	ea	20.00	80
Building Directory Board	1	ea	325.00	325
Total 10400				1070
10500 LOCKERS				
Double tier 72in high 16/24ga stl	30	ea	175.00	5250
Total 10500				5250
10800 TOILET ROOM ACCESSORIES				
Toilet ppr dble roll	5	ea	65.00	325
San napkin waste	1	ea	65.00	65
San napkin dispenser	1	ea	220.00	220
Combo ppr towel dispense & waste	2	ea	650.00	1300
Toilet seat cover dispense	2	ea	185.00	370
Robe hooks	2	ea	45.00	90
Soap & grab	2	ea	95.00	190
Counter mntd soap dispenser	4	ea	125.00	500
Hair dryers	2	ea	45.00	90
6'6x3'-0 Mirror	1	ea	850.00	850
4'-6x3'0 Mirror	1	ea	450.00	450
Total 10800				4450

GOSLINER/McLEAN ASSOCIATES, INC.
580 MARKET STREET
SAN FRANCISCO, CA 94104
TEL 415 433 4897/FAX 415 433 2907

PROJECT BLDG 6 REMODEL LAWRENCE FOR U.CALIFORNIA
BERKELEY LABORATORY LOCATION BERKELEY, CA SHEET NO. 7 OF 19
ARCHITECT ENGINEER KELLER & GANNON DATE 4-15-92
CONCEPTUAL ESTIMATE

Description	Quantity	Unit	Unit Price	Totals
10950 MISCELLANEOUS SPECIALITIES				
Microwave oven	3	ea	175.00	525
Refrigerator - compact	3	ea	245.00	735
20# CO2 and cabinets	2	ea	175.00	350
Door hooks	85	ea	25.00	2125
Mop strip	1	ea	50.00	50
Mail boxes	13	ea	125.00	1625
Corner guard	20	ea	125.00	2500
Total 10950				7910
11130 PROJECTION SCREEN				
Electric recessed 10ft by 6ft	2	ea	1500.00	3000
Total 11130				3000
12503 WINDOW TREATMENT				
Venetian blinds	2472	sf	6.25	15450
Total 12503				15450
14200 HYDRAULIC ELEVATORS				
Lobby elevator 2500 lb. 2 levels	1	ea	55000	55000
Service elevator 7000 lb. 2 levels	1	ea	85000	85000
Total 14200				140000
15300 FIRE PROTECTION				
Ordinary hazard - wet type system	24849	sf	2.00	49698
4in standpipe riser	1	ea	2500	2500
Total 15300				52198
15400 PLUMBING				
Fixtures: include trim				
Self contained shower/base	2	ea	975.00	1950
WAll mounted water closet/carrier	5	ea	1490	7450
Wall hung urinal/carrier	2	ea	1140	2280
Counter mtd lavatory	6	ea	890.00	5340
Kitchenette refrig/microwave	1	ea	1500	1500
Kitchen sink stn stl	1	ea	775.00	775
Laboratory sink stn stl	11	ea	1645	18095
Service sink	1	ea	1185	1185
Drinking fountain	1	ea	750.00	750
Fume hood	6	ea	8500	51000 *
Floor drain	15	ea	250.00	3750
Lift station at labs	11	ea	1125	12375
Acid neutralizing system - labs	1	ea	3425	3425 *

*Included in estimate for Special Building Facilities

GOSLINER/McLEAN ASSOCIATES, INC.
580 MARKET STREET
SAN FRANCISCO, CA 94104
TEL 415 433 4897/FAX 415 433 2907

PROJECT BLDG 6 REMODEL LAWRENCE FOR U.CALIFORNIA
BERKELEY LABORATORY LOCATION BERKELEY, CA SHEET NO. 8 OF 19
ARCHITECT ENGINEER KELLER & GANNON DATE 4-15-92

CONCEPTUAL ESTIMATE

Description	Quantity	Unit	Unit Price	Totals
4in C.I. soil pipe	650	lf	25.00	16250
4in C.I. soil pipe ftgs	78	ea	120.00	9360
3in C.I. soil pipe	300	lf	22.00	6600
3in C.I. soil pipe ftgs	36	ea	105.00	3780
2in C.I. soil pipe	420	lf	20.00	8400
2in C.I. soil pipe ftgs	50	ea	89.00	4450
2in n.h. C.I. soil/vent pipe	450	lf	18.00	8100
2in n.h. C.I. soil/vent pipe ftgs	54	ea	133.00	7182
N.H.C.I. cleanouts	18	ea	175.00	3150
2-1/2in dia copper CHS/HW/CW pipe/ins.	100	lf	35.85	3585
2-1/2in dia copper CHS/HW/CW ftgs/ins.	10	ea	107.15	1072
2 in dia copper CHS/HW/CW pipe/ins.	260	lf	28.50	7410
2 in dia copper CHS/HW/CW ftgs/ins.	26	ea	74.95	1949
1-1/2 in dia copper CHS/HW/CW pipe/ins.	200	lf	20.85	4170
1-1/2 in dia copper CHS/HW/CW ftgs/ins.	20	ea	62.65	1253
1 in dia copper CHS/HW/CW pipe/ins.	200	lf	15.75	3150
1 in dia copper CHS/HW/CW ftgs/ins.	20	ea	45.85	917
3/4 in dia copper CHS/HW/CW pipe/ins.	1630	lf	13.75	22413
3/4 in dia copper CHS/HW/CW ftgs/ins.	163	ea	39.75	6479
1/2 in dia copper HW/CW pipe/ins	1550	ea	12.10	18755
1/2 in dia copper HW/CW pipe ftgs/ins	155	ea	36.65	5681
Pipe station/valves/trim @ AHU-1	1	ea	2500.00	2500
Pipe station/valves/trim @ VAV Boxes	34	ea	750.00	25500
Misc service/stop/gate valves	1	lot	2500.00	2500
Rough-in at fume hoods	6	ea	375.00	2250
Rough-in at lab benches	11	ea	875.00	9625
1 in dia blk stl gas pipe	480	ea	12.40	5952
1 in dia blk stl gas pipe ftgs	48	ea	42.00	2016
1 in dia blk stl LCW pipe	480	lf	12.40	5952
1 in dia blk stl LCW pipe ftgs	48	ea	42.00	2016
1/2 in dia blk stl gas pipe	260	ea	10.00	2600
1/2 in dia blk stl gas pipe ftgs	26	ea	36.00	936
1/2 in dia blk stl CA pipe	260	lf	10.00	2600
1/2 in dia blk stl CA pipe ftgs	26	ea	36.00	936
2 in dia valves/trim	6	ea	95.00	570
1-1/2 in dia valves/trim	8	ea	70.00	560
1 in dia valves/trim	12	ea	55.00	660
3/4 in dia valves/trim	92	ea	45.00	4140
1/2 in dia valves/trim	72	ea	35.00	2520
Core drill E walls/floors	12	ea	100.00	1200
Connect to (E) services	9	ea	95.00	855
Connect to (E) mains	6	ea	75.00	450
Clean/test/disinfect	8080	lf	1.25	10100
Total 15400				340419

GOSLINER/McLEAN ASSOCIATES, INC.
580 MARKET STREET
SAN FRANCISCO, CA 94104
TEL 415 433 4897/FAX 415 433 2907

PROJECT BLDG 6 REMODEL LAWRENCE FOR U.CALIFORNIA
BERKELEY LABORATORY LOCATION BERKELEY, CA SHEET NO. 9 OF 19
ARCHITECT ENGINEER KELLER & GANNON DATE 4-15-92
CONCEPTUAL ESTIMATE

Description	Quantity	Unit	Unit Price	Totals
15550 HEATING, VENTILATING AND AIR CONDITIONIN				
AHU-2 25,000cfm, 25hp, VFD, 85% filt	1	ea	22500	22500
Fan powered VAV Terminal w/H&C coils	28	ea	1425	39900
Static cont. VAV Terminal w/H&C coils	6	ea	1125	6750
Fume exhaust fans w/coating/VFD 7.5hp	4	ea	3000	12000
Gen exhaust fans w/coating/VFD 5hp	2	ea	2500	5000
Laboratory fume hood assy	6	ea	8500	51000
Isolator bases - exhaust fans	6	ea	750	4500
Isolator base - AHU unit	1	ea	1750	1750
Duct liner/insulation	15464	sf	3.25	50258
Galvanized ductwork	20622	lbs	6.50	134043
Canvas connections	148	lf	3.00	444
Smoke damper	25	sf	55.00	1375
Manual dampers	68	sf	25.00	1700
Branch take-offs	80	ea	25.00	2000
Ceiling supply diffuser	58	ea	85.00	4930
Ceiling exhaust diffuser	4	ea	75.00	300
Linear diffusers	684	lf	50.00	34200
Fire dampers	81	sf	125.00	10125
Check/test/start-up	3	md	500.00	1500
Total 15550				384275
15950 CONTROLS				
Temperature control system	217	pts	500	108500
Total 15950				108500
15990 AIR AND WATER BALANCE				
Air balance	1	sub	3000	3000
Water balance	1	sub	1000	1000
Total 15990				4000

GOSLINER/McLEAN ASSOCIATES, INC.
580 MARKET STREET
SAN FRANCISCO, CA 94104
TEL 415 433 4887/FAX 415 433 2907

PROJECT BLDG 6 REMODEL LAWRENCE FOR U. CALIFORNIA
BERKELEY LABORATORY LOCATION BERKELEY, CA SHEET NO 10 OF 19
ARCHITECT ENGINEER KELLER & GANNON DATE 4-15-92
CONCEPTUAL ESTIMATE

Description	Quantity	Unit	Unit Price	Totals
16000 - ELECTRICAL				
ALS USER SPACE				

PENDANT FLUORESCENT FIXTURE, INDIRECT, 2L (A)	214	EA	336	71904
PEND. FLUOR. FIXTURE, INDIRECT, 2L, W/DIM. BALLAST (A)	8	EA	358	2864
PENDANT FLUORESCENT FIXTURE, DIRECT, 2L (A1)	129	EA	336	43344
SURFACE FLUORESCENT FIXTURE, 2L (B)	53	EA	172	9116
FLUORESCENT BRACKET FIXTURE, 2L (C)	6	EA	398	2388
PENDANT FLUORESCENT FIXTURE, 2L (C)	4	EA	411	1644
FLUORESCENT EXIT LITE W/STROBE LIGHT (D)	10	EA	275	2750
FLUORESCENT CORRIDOR FIXTURE, 2L (E)	25	EA	408	10200
HID RECESSED FIXTURE, 175MH (F)	37	EA	414	15318
SURFACE CIRCLINE FIXTURE, 22W (G)	2	EA	121	242
FLUORESCENT UNDERCOUNTER LITE, 1L, 20W	2	EA	147	294
SURFACE LIGHT TRACK, 10' LONG	2	EA	215	430
TRACK LITE FIXTURES	4	EA	75	300
1P TOGGLE SWITCH	108	EA	66	7128
FLUORESCENT DIMMER SWITCH	1	EA	118	118
1P KEYED TOGGLE SWITCH	2	EA	94	188
3-WAY TOGGLE SWITCH	12	EA	72	864
20A, 120V DUPLEX RECEPTACLE	256	EA	82	20992
20A, 120V GFCI DUPLEX RECEPTACLE	5	EA	103	515
JUNCTION BOXES	8	EA	134	1072
ISOLATED GROUND JUNCTION BOX	8	EA	189	1512
100A JUNCTION BOX	4	EA	286	1144
DUPLEX RECEPTACLE WITH FLOOR BOX	2	EA	140	280
TELEPHONE OUTLET WITH FLOOR BOX	1	EA	130	130
TELEPHONE WALL OUTLETS	112	EA	67	7504
ZONE MODULE FOR EXIST. FIRE ALARM CONTROL PANEL	1	EA	260	260
FIRE ALARM STATIONS	7	EA	109	763
FIRE ALARM HORN/STROBE LIGHT	17	EA	289	4913
SMOKE DETECTORS	14	EA	199	2786
WALL SPEAKERS	10	EA	145	1450
CEILING SPEAKERS	6	EA	145	870
20 X 24 X 4 TERMINAL CABINET	1	EA	164	164
CONNECT ONLY EXHAUST HOODS	7	EA	354	2478
CONNECT ONLY 25HP, 480V AIR HANDLER	1	EA	702	702
CONNECT ONLY VAV BOXES, 1/4HP, 120V	28	EA	397	11116
CONNECT ONLY 7-1/2HP, 480V ROOF EXHAUST FAN	2	EA	515	1030
CONNECT ONLY 10HP, 480V ROOF EXHAUST FAN	1	EA	515	515
CONNECT ONLY 1/15HP, 120V ROOF EXHAUST FAN	1	EA	307	307
150A 3P, 480V CIRCUIT BREAKER FOR EXIST. MOTOR CONTROL CENTER	1	EA	600	600
277/480V PANELBOARD, 42-CIRCUIT, MAIN BREAKER	1	EA	4400	4400
120/208V PANELBOARD, 42-CIRCUIT, MAIN BREAKER	1	EA	2881	2881
45KVA, 480-208/120V TRANSFORMER	1	EA	2327	2327

ALS USER SPACE TOTAL				239803

FN: 97451

GOSLINER/McLEAN ASSOCIATES, INC.
580 MARKET STREET
SAN FRANCISCO, CA 94104
TEL 415 433 4897/FAX 415 433 2907

PROJECT BLDG 6 REMODEL LAWRENCE FOR U.CALIFORNIA
BERKELEY LABORATORY LOCATION BERKELEY, CA SHEET NO. 11 OF 19
ARCHITECT ENGINEER KELLER & GANNON DATE 4-15-92
CONCEPTUAL ESTIMATE

Description	Quantity	Unit	Unit Price	Totals
ALS STRUCTURAL BIOLOGY SUPPORT FACILITIES - SECTION B [1]				
03100 CONCRETE FORMWORK				1311
03200 CONCRETE REINFORCEMENT				3131
03300 CAST-IN-PLACE CONCRETE				7037
03600 GROUTING				61
05300 STEEL DECKING				221
05340 METAL PANELS				4000
05500 METAL FABRICATIONS				36850
06200 CARPENTRY				19780
07253 SPRAY-ON FIREPROOFING				2953
07260 FIRESTOPING				5000
07500 SINGLE PLY ROOFING REPAIR				2189
07600 FLASHING AND SHEETMETAL				1073
07920 SEALANTS				1393
08100 HOLLOW METAL DOORS AND FRAMES				15900
08210 WOOD DOORS				4950
08710 FINISH HARDWARE				9340
09250 GYPSUM BOARD WALL AND CEILING SYSTEMS				42899
09510 ACOUSTIC TREATMENT				41976
09650 RESILIENT FLOORING				14612
09685 CARPETING				5400
09900 PAINTING				12868
10100 MARKER BOARDS AND TACK BOARDS				1230
10400 IDENTIFYING DEVICES				1095
10950 MISCELLANEOUS SPECIALTIES				1975
12503 WINDOW TREATMENT				2138
15300 FIRE PROTECTION				15624
15400 PLUMBING				139260
15550 HEATING, VENTILATING AND AIR CONDITIONING EQUIPMENT				130695
15950 CONTROLS				44500
15990 AIR AND WATER BALANCING				2500
16000 ELECTRICAL				68896
Subtotal				640855
GENERAL CONDITIONS	3	%		19226
Subtotal				660081
PROFIT AND GENERAL OVERHEAD	18	%		118815
TOTAL ESTIMATED COST				778895

[1] The Detailed Estimate on pages 9-72 through 9-80 is not in this scope of work, with the exception of the items marked with an asterisk. The estimate for these items has been combined with the estimates on page 9-65 and included in the Estimate Summary on pages 3-5 through 3-8.

GOSLINER/McLEAN ASSOCIATES, INC.
580 MARKET STREET
SAN FRANCISCO, CA 94104
TEL 415 433 4897/FAX 415 433 2907

PROJECT BLDG 6 REMODEL LAWRENCE FOR U.CALIFORNIA
BERKELEY LABORATORY LOCATION BERKELEY, CA SHEET NO. 12 OF 19
ARCHITECT ENGINEER KELLER & GANNON DATE 4-15-92

CONCEPTUAL ESTIMATE

Description	Quantity	Unit	Unit Price	Totals	
03100 CONCRETE FORMWORK					
Form equipment pads	104	lf	5.75	598	
Form curb at roof	92	lf	7.75	713	*
Total 03100				1311	
03200 CONCRETE REINFORCEMENT					
Dowel to E roof deck ALLOW	24	loc	50.00	1200	*
Dowel to E floor slab ALLOW	18	loc	75.00	1350	
Reinforcing	775	#	0.75	581	
Total 03200				3131	
03300 CAST-IN-PLACE CONCRETE					
Sawcut roof slab/deck	20	lf	5.00	100	*
Dispose of concrete waste	2	cy	16.00	32	
Equipment pad concrete	34	cy	105.00	3570	
Roof Curb concrete	23	cy	145.00	3335	*
Total 03300				7037	
03600 GROUTING					
Nonshrink grout	27	lf	2.25	61	
Total 03600				61	
05120 STRUCTURAL STEEL - none shown					
05300 STEEL DECKING					
Seal roof openings in deck	26	lf	8.50	221	*
Total 05300				221	
05340 METAL PANELS					
Fan enclosure panels/frame on roof	300	sfsa	12.50	3750	*
Access service door	1	ea	250.00	250	*
Total 05340				4000	

*Included in estimate on page 9-62

GOSLINER/McLEAN ASSOCIATES, INC.
580 MARKET STREET
SAN FRANCISCO, CA 94104
TEL 415 433 4897/FAX 415 433 2907

PROJECT BLDG 6 REMODEL LAWRENCE FOR U.CALIFORNIA
BERKELEY LABORATORY LOCATION BERKELEY, CA SHEET NO. 13 OF 19
ARCHITECT ENGINEER KELLER & GANNON DATE 4-15-92
CONCEPTUAL ESTIMATE

Description	Quantity	Unit	Unit Price	Totals	
05500 METAL FABRICATIONS					
Beam reinforcing - bottom flange					
Clean off E spray-on fireproofing	16	mh	65.00	1040	*
Remove/replace E mechanical/electrical	1	allow	5000.00	5000	*
Shore beams each side	310	lf	6.00	1860	*
Material fabricated FOB	9914	#	1.75	17350	*
Field welds ALLOW	310	lf	25.00	7750	*
Miscellaneous steel framing	1000	#	2.25	2250	
Add for connections	400	#	4.00	1600	
Total 05500				36850	
06200 CARPENTRY					
Rem E wood frame partitions	300	sf	1.60	480	
Install temporary partitions	1600	sf	3.00	4800	
Install interior doors/hardware	30	ea	150.00	4500	
Install rough hardware	1	lot	4000.00	4000	
Install miscellaneous specialties	1	lot	6000.00	6000	
Total 06200				19780	
07253 SPRAY-ON FIREPROOFING					
Repair const. damaged E fp at decks/stl	6562	sf	0.45	2953	
Total 07253				2953	
07260 FIRESTOPPING					
In-fill at rated walls	160	lf	25.00	4000	
Patch siding at temporary work entry	1	lot	1000.00	1000	
Total 07260				5000	
07500 SINGLE PLY ROOFING REPAIR					
Re-roof at equipment curbs/opgs	2	sqrs	275.00	550	*
Re-roof at equipment screen panels	4	sqrs	275.00	1100	*
Service walkway 2ft sq pavers	154	sf	3.50	539	*
Total 07500				2189	
07600 FLASHING AND SHEETMETAL					
Flash at equipment curbs/openings	68	lf	7.50	510	*
Flash at equipment screen panels	75	lf	7.50	563	*
Total 07600				1073	

*Included in estimate on page 9-62

GOSLINER/McLEAN ASSOCIATES, INC.
580 MARKET STREET
SAN FRANCISCO, CA 94104
TEL 415 433 4897/FAX 415 433 2907

PROJECT BLDG 6 REMODEL LAWRENCE FOR U.CALIFORNIA
BERKELEY LABORATORY LOCATION BERKELEY, CA SHEET NO. 14 OF 19
ARCHITECT ENGINEER KELLER & GANNON DATE 4-15-92

CONCEPTUAL ESTIMATE

Description	Quantity	Unit	Unit Price	Totals
07920 SEALANTS				
Caulk roof flashings	143	lf	1.00	143
Miscellaneous caulking	1	lot	1250.00	1250
Total 07920				1393
08100 HOLLOW METAL DOORS AND FRAMES				
6070 HM door/frame 1hr	2	ea	1750.00	3500
3070 HM door/frame 1hr	8	ea	875.00	7000
3070 HM frame	18	ea	300.00	5400
Total 08100				15900
08210 WOOD DOORS				
3070x1-3/4in FL SC WD door	18	ea	275.00	4950
Total 08210				4950
08710 FINISH HARDWARE				
Double door 1hr allow	2	ea	445.00	890
Interior door 1hr ALLOW	26	ea	325.00	8450
Total 08710				9340
09250 GYPSUM BOARD WALL AND CEILING SYSTEMS				
Stl stud wall 13ft-6in w/gypbd ea side	7641	sf	3.75	28654
Stl stud wall 9ft-6in w/gypbd ea side	1292	sf	3.60	4651
Ceiling suspension sys - toilets/stairs	242	sf	2.25	545
Tape/finish E gypboard walls	13923	sf	0.65	9050
Total 09250				42899
09510 ACOUSTICAL TREATMENT				
2x4 Exp T acoustic tile clg offices	1620	sf	1.95	3159
Accoustic wall panel - office	576	sf	4.00	2304
Ceiling suspension system - corridors	1068	sf	8.75	9345
Ceiling suspension system - labs	2176	sf	10.00	21760
Accoustic board walls/clg mech room	1442	sf	3.75	5408
Total 09510				41976
09650 RESILIENT FLOORING				
1/8in Vinyl compostion tile	3619	sf	3.35	12124
4in Topset rubber base	1555	lf	1.60	2488
Total 09650				14612

*Included in estimate on page 9-62

GOSLINER/McLEAN ASSOCIATES, INC.
580 MARKET STREET
SAN FRANCISCO, CA 94104
TEL 415 433 4897/FAX 415 433 2907

PROJECT BLDG 6 REMODEL LAWRENCE FOR U.CALIFORNIA
BERKELEY LABORATORY LOCATION BERKELEY, CA SHEET NO. 15 OF 19
ARCHITECT ENGINEER KELLER & GANNON DATE 4-15-92

CONCEPTUAL ESTIMATE

Description	Quantity	Unit	Unit Price	Totals
09685 CARPET				
Med weight carpet ALLOW	180	sy	30.00	5400
Total 09685				5400
09900 PAINTING				
Gyp board ceilings	242	sf	0.60	145
Gyp board walls	17434	sf	0.55	9589
Ceiling cavity - labs/corridors	3244	sf	0.55	1784
3070 Doors & frames	30	ea	45.00	1350
Total 09900				12868
10100 MARKER BOARDS AND TACK BOARDS				
Porcelain/steel marker boards	5	ea	75.00	375
Aluminum/fabric tack boards	9	ea	95.00	855
Total 10100				1230
10400 IDENTIFYING DEVICES				
Plastic room numbers	20	ea	45.00	900
Floor plan plaque	1	ea	175.00	175
Directional/no smoking signs	1	ea	20.00	20
Total 10400				1095
10950 MISCELLANEOUS SPECIALITIES				
Corner guards	13	ea	125.00	1625
Door hooks	14	ea	25.00	350
Total 10950				1975
12503 WINDOW TREATMENT				
Venetian blinds	342	sf	6.25	2138
Total 12503				2138
15300 FIRE PROTECTION				
Ordinary hazard - wet type system	6562	sf	2.00	13124
4in standpipe riser	1	ea	2500.00	2500
Total 15300				15624

GOSLINER/McLEAN ASSOCIATES, INC.
580 MARKET STREET
SAN FRANCISCO, CA 94104
TEL 415 433 4897/FAX 415 433 2907

PROJECT BLDG 6 REMODEL LAWRENCE FOR U.CALIFORNIA
BERKELEY LABORATORY LOCATION BERKELEY, CA SHEET NO. 16 OF 19
ARCHITECT ENGINEER KELLER & GANNON DATE 4-15-92
CONCEPTUAL ESTIMATE

Description	Quantity	Unit	Unit Price	Totals	
15400 PLUMBING					
Fixtures: include trim					
Fume hood	5	ea	8500.00	42500	*
Floor drain	6	ea	250.00	1500	
Lift station at labs	5	ea	1125.00	5625	
Acid neutralizing system - labs	1	ea	2475.00	2475	*
4in C.I. soil pipe	260	lf	25.00	6500	
4in C.I. soil pipe ftgs	31	ea	120.00	3720	
3in C.I. soil pipe	140	lf	22.00	3080	
3in C.I. soil pipe ftgs	17	ea	105.00	1785	
2in C.I. soil pipe	80	lf	20.00	1600	
2in C.I. soil pipe ftgs	10	ea	89.00	890	
2in n.h. C.I. soil/vent pipe	100	lf	18.00	1800	
2in n.h. C.I. soil/vent pipe ftgs	12	ea	133.00	1596	
N.H.C.I. cleanouts	6	ea	175.00	1050	
2-1/2in dia copper CHS/HW/CW pipe/ins.	160	lf	35.85	5736	
2-1/2in dia copper CHS/HW/CW ftgs/ins.	16	ea	107.15	1714	
2 in dia copper CHS/HW/CW pipe/ins.	220	lf	28.50	6270	
2 in dia copper CHS/HW/CW ftgs/ins.	22	ea	74.95	1649	
1-1/2 in dia copper CHS/HW/CW pipe/ins.	120	lf	20.85	2502	
1-1/2 in dia copper CHS/HW/CW ftgs/ins.	12	ea	62.65	752	
1 in dia copper CHS/HW/CW pipe/ins.	120	lf	15.75	1890	
1 in dia copper CHS/HW/CW ftgs/ins.	12	ea	45.85	550	
3/4 in dia copper CHS/HW/CW pipe/ins.	240	lf	13.75	3300	
3/4 in dia copper CHS/HW/CW ftgs/ins.	24	ea	39.75	954	
1/2 in dia copper HW/CW pipe/ins	240	ea	12.10	2904	
1/2 in dia copper HW/CW pipe ftgs/ins	24	ea	36.65	880	
Pipe station/valves/trim @ AHU-1	1	ea	2500.00	2500	
Pipe station/valves/trim @ VAV Boxes	11	ea	750.00	8250	
Misc service/stop/gate valves	1	lot	2500.00	2500	
Rough-in at fume hoods	5	ea	375.00	1875	
Rough-in at lab benches	6	ea	875.00	5250	
1 in dia blk stl gas pipe	120	ea	12.40	1488	
1 in dia blk stl gas pipe ftgs	12	ea	42.00	504	
1 in dia blk stl LCW pipe	120	lf	12.40	1488	
1 in dia blk stl LCW pipe ftgs	12	ea	42.00	504	
1/2 in dia blk stl gas pipe	120	ea	10.00	1200	
1/2 in dia blk stl gas pipe ftgs	12	ea	36.00	432	
1/2 in dia blk stl CA pipe	120	lf	10.00	1200	
1/2 in dia blk stl CA pipe ftgs	12	ea	36.00	432	
2 in dia valves/trim	6	ea	95.00	570	
1-1/2 in dia valves/trim	4	ea	70.00	280	
1 in dia valves/trim	8	ea	55.00	440	
3/4 in dia valves/trim	24	lot	45.00	1080	
1/2 in dia valves/trim	24	ea	35.00	840	

*Included in estimate for Special Building Facilities

GOSLINER/McLEAN ASSOCIATES, INC.
580 MARKET STREET
SAN FRANCISCO, CA 94104
TEL 415 433 4897/FAX 415 433 2907

PROJECT BLDG 6 REMODEL LAWRENCE FOR U.CALIFORNIA
BERKELEY LABORATORY LOCATION BERKELEY, CA SHEET NO. 17 OF 19
ARCHITECT ENGINEER KELLER & GANNON DATE 4-15-92

CONCEPTUAL ESTIMATE

Description	Quantity	Unit	Unit Price	Totals
Core drill E walls/floors	12	ea	100.00	1200
Connect to (E) services	9	ea	95.00	855
Connect to (E) mains	6	ea	75.00	450
Clean/test/disinfect	2160	lf	1.25	2700
Total 15400				139260
15550 HEATING, VENTILATING AND AIR CONDITIONIN				
AHU-1 25,000cfm, 25hp, VFD, 85% filt	1	ea	22500.00	22500
Fan powered VAV Terminal w/H&C coils	6	ea	1425.00	8550
Static cont. VAV Terminal w/H&C coils	5	ea	1125.00	5625
Fume exhaust fans w/coating/VFD 7.5hp	2	ea	3000.00	6000
Gen exhaust fans w/coating/VFD 5hp	1	ea	2500.00	2500
Laboratory fume hood assy	6	ea	8500.00	51000
Isolator bases - exhaust fans	3	ea	750.00	2250
Isolator base - AHU unit	1	ea	1750.00	1750
Duct liner/insulation	3271	sf	3.25	10631
Galvanized ductwork	4362	lbs	6.50	28353
Canvas connections	132	lf	3.00	396
Smoke damper	25	sf	55.00	1375
Manual dampers	22	sf	25.00	550
Branch take-offs	22	ea	25.00	550
Ceiling supply diffuser	9	ea	85.00	765
Ceiling exhaust diffuser	4	ea	75.00	300
Linear diffusers	92	lf	50.00	4600
Fire dampers	36	sf	125.00	4500
Check/test/start-up	2	md	500.00	1000
Total 15550				130695

GOSLINER/McLEAN ASSOCIATES, INC.
580 MARKET STREET
SAN FRANCISCO, CA 94104
TEL 415 433 4897/FAX 415 433 2907

PROJECT BLDG 6 REMODEL LAWRENCE FOR U.CALIFORNIA

BERKELEY LABORATORY LOCATION BERKELEY, CA SHEET NO. 18 OF 19

ARCHITECT ENGINEER KELLER & GANNON DATE 4-15-92

CONCEPTUAL ESTIMATE

Description	Quantity	Unit	Unit Price	Totals
15950 CONTROLS				
Temperature control system DDC	89	pts	500.00	44500
Total 15950				44500
15990 AIR AND WATER BALANCE				
Air balance	1	sub	2000.00	2000
Water balance	1	sub	500.00	500
Total 15990				2500

GOSLINER/McLEAN ASSOCIATES, INC.
580 MARKET STREET
SAN FRANCISCO, CA 94104
TEL 415 433 4867/FAX 415 433 2807

PROJECT BLDG 6 REMODEL LAWRENCE FOR U.CALIFORNIA

BERKELEY LABORATORY LOCATION BERKELEY, CA SHEET NO 19 OF 19

ARCHITECT ENGINEER KELLER & GANNON DATE 4-15-92

CONCEPTUAL ESTIMATE

Description	Quantity	Unit	Unit Price	Totals
16000 - ELECTRICAL				
LIFE SCIENCES CENTER				

PENDANT FLUORESCENT FIXTURE, INDIRECT, 2L (A)	54	EA	336	18144
PENDANT FLUORESCENT FIXTURE, DIRECT, 2L (A1)	51	EA	336	17136
SURFACE FLUORESCENT FIXTURE, 2L (B)	14	EA	172	2408
FLUORESCENT EXIT LITE W/STROBE LIGHT (D)	4	EA	275	1100
FLUORESCENT CORRIDOR FIXTURE, 2L (E)	17	EA	408	6936
1P TOGGLE SWITCH	29	EA	66	1914
3-WAY TOGGLE SWITCH	2	EA	72	144
20A, 120V DUPLEX RECEPTACLE	65	EA	82	5330
JUNCTION BOXES	5	EA	134	670
ISOLATED GROUND JUNCTION BOX	5	EA	189	945
TELEPHONE WALL OUTLETS	33	EA	67	2211
FIRE ALARM STATIONS	2	EA	109	218
FIRE ALARM HORN/STROBE LIGHT	3	EA	289	867
SMOKE DETECTORS	10	EA	199	1990
WALL SPEAKERS	8	EA	145	1160
CEILING SPEAKERS	8	EA	145	1160
20 X 24 X 4 TERMINAL CABINET	1	EA	164	164
CONNECT ONLY EXHAUST HOODS	5	EA	354	1770
CONNECT ONLY 25HP, 480V AIR HANDLER	1	EA	702	702
CONNECT ONLY VAV BOXES, 1/4HP, 120V	6	EA	397	2382
CONNECT ONLY 7-1/2HP, 480V ROOF EXHAUST FAN	3	EA	515	1545

LIFE SCIENCES CENTER TOTAL				68896
FN: 974511				

ALS BEAMLINES INITIATIVE

Details of Estimate for Special Building Facilities and Standard Equipment

(FY 1992 $K)

ALS BEAMLINES INITIATIVE

SPECIAL BUILDING FACILITIES COST ESTIMATE DETAIL

(FY 1992 $K)

Laboratory Benches		108,000
Benches (500 LF @ $285/LF)	85,500	
Acid Resistant Tops (500 LF @ $75/LF)	22,500	
Chemical Storage Cabinets		
20 @ $600		9,000
Fume Hoods		
11 @ $8,500		51,000
Laminar Flow Hoods		
8 @ $5,000		30,000
Acid Neutralization System		3,430
UHV Workstations		
4 @ 15,000		30,000
Demountable Office Systems Furniture and Partitions		
28 @ 5,000		140,000
Total Direct Cost		371,430

ALS BEAMLINES INITIATIVE

STANDARD EQUIPMENT COST ESTIMATE DETAIL

(FY 1992 $K)

Laboratory Furniture		25,960
Heavy Duty Work Benches (10)	10,000	
Metal Storage Cabinets (26)	3,300	
Stools (60)	11,120	
Marker Boards (15)	1,540	
Office Furniture		66,500
Standard Desks (45)	11,340	
Desks With Returns (4)	2,480	
File Cabinets(48)	11,250	
Bookcases (48)	4,950	
Bookshelves (65 LF)	7,800	
Conference Tables/8 People (2)	1,200	
Conference Tables/4 People (5)	1,250	
Reception Desk	2,450	
Office Chairs (100)	23,780	
Office Equipment		13,000
Xerox Machine	10,000	
FAX Machine	3,000	
Total Direct Cost		105,460
Storage, Handling, Delivery and Setup 5%		5,270
Total Standard Equipment @ April 1992		**110,730**

ALS BEAMLINES INITIATIVE

Obligations and Costs Schedule (FY 1992 $K)

ALS BEAMLINES INITIATIVE

CONVENTIONAL FACILITIES

OBLIGATIONS AND COSTS SCHEDULE

(FY92 $K)

		FY 1995		FY 1996		FY 1997	
DESCRIPTION	TOTAL	O	C	O	C	O	C
LBL Activities							
Engineering	102	60	60	25	25	17	17
Consultants	17	9	9	8	8		
Inspection	51	—	—	26	26	25	25
Subtotal	170	69	69	59	59	42	42
Architect/Engineer							
Title I	102	102	102				
Title II	179	179	145	0	34		
Title III	94	94	0	0	43	0	51
Subtotal	375	375	247	0	77	0	51
Total ED&I	545	444	316	59	136	42	93
Construction							
Land Improvements	0						
Building	2,517			2,517	1,195	0	1,322
Special Building Facilities	452			273	145	179	307
Utilities	657			657	562	0	95
Subtotal	3,626			3,447	1,902	179	1,724
Standard Equipment	110					110	110
Subtotal	4,281	444	316	3,506	2,038	331	1,927
Contingency (17%)	750	153	111	418	264	179	375
TOTAL	5,031	597	427	3,924	2,302	510	2,302

ALS BEAMLINES INITIATIVE

ED&I Analysis

ALS BEAMLINES INITIATIVE

CONVENTIONAL FACILITIES

ED&I ANALYSIS
(TY $K)

LBL Activities

Engineering

• Title I (3.0 MM at 10.4/mos)				=	30
Proj Arch 1 x 0.4time x 3 mos	=	1.2MM			
Proj Team 3 x 0.2 time x 3 mos	=	1.8			
• Title II (5.8 MM at 10.4/mos)				=	60
Proj Arch 1 x 0.2 x 7 mos	=	1.4MM			
Proj Team 3 x 0.2 x 7 mos	=	4.4			
• Title III (3.8 MM at 10.4/mos)				=	40
Proj Team 3 x 0.08 x 16 mos	=	3.8			
• Inspection (5.8 MM at 10.4/mos)				=	60
Inspectors 1 x 0.36 x 16 mos	=	5.8			
• Consultants and Vendors				=	20
Independent Seismic Reviews			5		
Independent Cost Estimate			5		
Advertisements/Printing			5		
Construction Testing			5		
					200

A/E Activities 440

10.1% of Construction Costs ($4,350)

	Design Services	Construction Support	Design Support Services	Total	% of Total Fee
Title I	85		35	120	30
Title II	180		30	210	50
Title III		100	10	110	20

265 = 6.0% of Construction Cost

*See attached A/E Fee Proposal Estimate Form

Total Estimated ED&I 640

Current (October 1993) Engineering Rate: $9.0K/MM
Then Year Engineering Rate: $9.0K/MM x 1.160* = $10.4K/MM
*Escalation of 1.160 to Midpoint of Construction

FY 94	Oct 93	to	Sept 94	12 mo	@	3.4	=	3.4
FY 95	Oct 94	to	Sept 95	12 mo	@	4.0	=	4.0
FY 96	Oct 95	to	Sept 96	12 mo	@	3.9	=	3.9
FY 97	Oct 96	to	Sept 97	12 mo	@	3.8	=	3.8
								16.0

A/E FEE PROPOSAL ESTIMATE

THIS INFORMATION IS REQUIRED TO EVALUATE FEE PROPOSALS AND COMPLY WITH DOE AUDIT REQUIREMENTS ON NEGOTIATED CONTRACTS

A/E Firm Name:

S.C. No.: **Est. Construction Cost:** $ 4,350,000

Project Name: ALS Beamlines Initiative

Project Manager: Joe Harkins

Task Description:

Requester:

SECTION A DESIGN SERVICES		Design Discipline	Est. No. Dwgs.	Hourly Rate	Title I Est. Hrs.	Title I Estimated Cost A/E	Title I Estimated Cost Consultant	Title II Est. Hrs.	Title II Estimated Cost A/E	Title II Estimated Cost Consultant	Total Design Est. Hrs.	Total Design Estimated Cost
	DRAWINGS	Project Engineer		35	120	4,200		225	7,875		345	12,075
		Architect		35	150	5,250		450	15,750		600	21,000
		Struct Engineer		35	120		4,200	180		6,300	300	10,500
		Mech Engineer		35	150		5,250	275		9,625	425	14,875
		Elec Engineer		35	100		3,500	275		9,625	375	13,125
		Civil Engineer							0		0	0
		Fire Engineer				0			0		0	0
		Coord Consults				0			0		0	0
		Principal		35	10	350		10	350		20	700
						0			0		0	0
						0			0		0	0
						0			0		0	0
						0			0		0	0
		Draftsman	15	25	120	3,000		425	10,625		545	13,625
		Draftsman	15	25	95		2,375	200		5,000	295	7,375
		Mech Draftsman				0			0		0	0
		Elec Draftsman				0			0		0	0
		Civil Draftsman				0			0		0	0
		Fire Draftsman				0			0		0	0
						0			0		0	0
						0			0		0	0
						0			0		0	0
						0			0		0	0
		Total Drawings	30			12,800			34,600			93,275
	SPECS											
		Spec Writer		35	120	4,200		100	3,500		220	7,700
		Typist				0			0		0	0
		Total Specs	0			4,200			3,500			7,700
		Total Est. Cost A/E & Consultant				17,000	15,325		38,100	30,550		100,975
		Overhead % A/E 150	Consultant	150		25,500	22,988		57,150	45,825		151,463
			Subtotal			42,500	38,313		95,250	76,375		252,438
		Profit %		5		2,125	1,916		4,763	3,819		12,622
			Subtotal			44,625	40,228		100,013	80,194		265,059
							$____ /sheet		6.1% of ECC			
		Total cost of section A (Design)				265,059						

ENGINEERING SERVICES SUMMARY SHEET		TITLE I	TITLE II	TITLE III	TOTAL
Section B Post Construction Award Services (PCAS)	Review of Shop Drawing Submittals			50,000	50,000
	Inspection Services			35,000	35,000
	Prepare As-Built Drawings			15,000	15,000
					0
					0
	Total Cost of Section B			100,000	100,000
SECTION C DESIGN SUPPORT SERVICES	Interior Design		3,000		3,000
	Conferences	10,000	12,000	5,000	27,000
	Reproduction of Plans and Specs	4,000	5,000		9,000
	Field Work	8,000			8,000
	Soil Borings and Analysis				0
	Topographic Survey				0
	Concept Submission				0
	Storm Water Management Report				0
	Economic Analysis				0
	Energy Conservation Study				0
	Total Energy Study				0
	Energy Conservation Report	8,000			8,000
	Energy Systems Operation Guide				0
	Environmental Permits Report				0
	Fire Protection Analysis				0
	Model or Rendering				0
	Cost Engineer	5,000	5,000	5,000	15,000
	Project Engineering Documentation (PED)				0
	Value Engineering Services		5,000		5,000
					0
					0
					0
					0
					0
					0
					0
					0
	Travel and Per Diem				0
	Total Cost of Section C	35,000	30,000	10,000	75,000

DESIGN SCHEDULE						
30% Submit/Rev =	_____ wks	Total Section A (Titles I-II, Line 48)	84,853	180,207	N/A	265,060
60% Submit/Rev =	_____ wks	Total Section B (PCAS)			100,000	100,000
90% Submit/Rev =	_____ wks	Total Section C (Engr Serv)	35,000	30,000	10,000	75,000
Final Submit/Rev =	_____ wks					
Total =	0 wks	GRAND TOTAL Fee Proposal	119,853	210,207	110,000	440,060

SIGNATURE	APPROVAL	DATE

ENGINEERING AND DESIGN ACTIVITIES

Section A Design Services

	TITLE I ACTIVITIES	TITLE II ACTIVITIES	TITLE III ACTIVITIES
	Preliminary Design Calculations and Analyses	Final Design Calculations and Analyses	
	Preliminary Drawings	Definitive Drawings	
P	Preliminary Plans	Definitive Plans	
A	Outline Specifications	Procurement and Construction Specs	
G	Project Schedules	Project Schedules	
E	CADD and Computer Services	CADD and Computer Services	
	A/E Internal Design Coordination	A/E Internal Design Coordination	
1	Design Cost and Schedule Analysis and Control	Design Cost and Schedule Analysis and Control	
	Design Progress Reporting	Design Progress Reporting	
	Regulatory/Code Overview by A/E	Design QA Plan and Overview	

Section C Design Support Services

Section B Post Construction Award Services

	TITLE I ACTIVITIES	TITLE II ACTIVITIES	TITLE III ACTIVITIES
	Surveys to Support Design (Surveys, soil testing, etc.)	Travel to Support Design	Inspection Services
	Design QA Plan and Overview	Reproduction During Design	Review Shop Drawings
P	Travel to Support Design	Design Reviews (not Third Party)	Prepare As-Built Drawings
A	Reproduction During Design	CADD and Computer Services (Support)	
G	Design Kickoff Meeting	Project Schedules	
E	CADD and Computer Services (Support)	Constructability Reviews	
	Project Schedules	Safety Reviews by A/E	
2	Construction Cost Estimates	Construction Cost Estimates	
	Constructability Reviews	Acceptance Procedures	
	Safety Reviews by A/E	Certified Engineering Reports	
	Value Engineering	Bid Package Preparation	
	Identify Long Lead Procurements	Bid Evaluation/Opening/Award	
	Design Studies Not Included in Pre-Title I	Design Change Control	
	Preliminary Safety Analysis Report if Not Included in the CDR	Modification of Existing Safety Analysis Report	
	Design Change Control	Inspection Planning	
	Modification of Existing Safety Analysis Report		

NOTE: This representative list of functions was developed from FAR and DOE definitions. All functions meet FAR criteria, and the categories are segregated according to the FAR.

ALS Beamlines Initiative

APPENDIX B

Project Cost Estimate Details

The cost estimate for the ALS Beamlines Initiative Project was developed in FY1992 dollars, and then escalated to obtain the total estimated cost (TEC). The estimated cost for the project is $40.4M in FY1992 dollars and before LBL overhead costs are applied; in actual year (escalated) dollars for a three year project schedule (FY1996-FY1998), the TEC is $52.6M (including 8.61% LBL overhead charges). The FY1992 cost estimate detail information is presented in this Appendix. The cost estimate includes all construction costs to be incurred after project approval. Project scope includes the ALS beamlines systems, conventional facilities, engineering design and inspection (EDI), project management, and contingency. These cost estimate details are organized into a Work Breakdown Structure (WBS) format that presents a complete compilation of all the work elements in the construction project.

The detailed WBS was developed to insure that all elements of the ALS Beamlines Initiative project were evaluated for the design, and then appropriately included in the cost estimate. It defines the scope of the project in terms of the work to be done, and provides a structure for collecting costs in an organized fashion. WBS Level 1, the item with a one-digit code, is the entire project. Level 2 breaks the project down into the major categories of Management (1.1), ALS Beamlines Systems (1.2), Conventional Facilities (1.3), and Contingency (1.4). Lower levels of the WBS subdivide the project into ever smaller detail. For example, at Level 3, the ALS Beamlines Systems are subdivided into the five major beamline systems: Dynamical Phenomena Beamlines (1.2.1), Chemical Dynamics Beamline (1.2.2), Circular Polarization Beamline (1.2.3), Spectroscopy Beamlines (1.2.4), and Soft X-Ray Microscopy Beamline (1.2.5). The WBS and costs, summarized to level 4, are shown in Table B.1, page B-4.

Basis for the Cost Estimate

ALS Beamlines Systems: Most of the Insertion Devices and Experimental Beamlines cost estimate details were derived from previous cost estimates developed and reviewed most recently in December 1991 for the Advanced Light Source (ALS). All of this material had been developed and assembled (October 1991) by the ALS staff for the DOE ALS Project semi-annual review in December 1991. Within this same time period, some elements and cost data for the insertion

devices and beamline portions of the Life Sciences Center and the Combustion Dynamics Research Laboratory Projects were derived from this ALS data base as well. These data have also been examined and validated by DOE review groups within the last year and also describe current representations of similar estimated costs of such devices. This ALS data base, then, is the basic source of the estimates for the wiggler and undulator insertion devices, experimental system beamline 'front ends', and their respective branchlines and monochromator systems.

The general philosophy of this estimate as regards optical components is the same as that used in the ALS costing: current cost estimates are based on optical systems that have actually been fully designed. This means that the size, shape, radii of curvature, construction materials, and fabrication tolerances for all optical components were fixed, as was the floor layout including the positions of all components. The original ALS cost estimates were developed with this design detail definition and are appropriate to use as the basis for comparable current element costs.

Conventional Facilities: For the conventional facilities improvements within the Building 6 second floor area, the estimate was prepared by LBL's Plant Engineering Group, based on quantity take-offs from conceptual design drawings and specifications developed by Keller & Gannon Engineering-Architect firm based on a conceptual design study that was completed in April 1992. These base Keller & Gannon conventional construction costs, dated April 1992, form the basis for the current FY92 base costs. The conventional facilities data is included in the WBS and cost estimate data base in the Appendix B tables. This data is described and presented in somewhat more detail in Appendix A.

EDI: The portions of the overall cost estimate required for Engineering, Design, and Inspection (EDI) activities were developed for both the conventional construction and ALS beamlines systems categories. The conventional facilities EDI includes both the cost of the Architecht/Engineer (AE) scope of work and the LBL Plant Engineering activities. The EDI for the beamline components was estimated in a manner consistent with the original ALS detail cost estimate procedures.

Contingency: A contingency cost is included in the estimate to reflect the technical and cost uncertainties associated with each of the individual systems. These contingencies reflect past experiences on similar systems. The Contingency Analysis summary is shown in Table B.2. The contingency is grouped into three main categories: 1.4.1 - Management Support, 1.4.2 - ALS Beamlines Systems, and 1.4.3 - Conventional Facilities.

The 'ALS Beamlines Systems' contingency was developed by examining work category levels as low as WBS level 5. The data for "% Contingency" and "K$ Contingency" at these levels is shown on Table B.2. The individual percentage estimates range from 15% to 30% depending on the state of the design and the estimated overall uncertainty of the cost estimate. For those elements that were developed directly from the ALS cost data base, the same contingency percentage is used as in the ALS estimate. (e.g. wiggler and undulator, beamline frontends, and EDI). The resulting 'overall effective contingency' for the ALS beamlines systems is approximately 24%.

For the 'Conventional Facilities' contingency rates of 15-20% are used. For the EDI categories, the contingencies are 20% for LBL activities and 20% for A/E activities. The construction contingency is 16% and standard equipment contingency is 15%; the special building facilities and utilities contingency is 20%.

The total project contingency of 7,579K$ represents an 'overall effective contingency' of approximately 23% for all project construction costs. The contingency analysis summary is presented in Table B.2, pages B-5 through B-6.

Cost Estimate Details: The lowest level WBS elements, as well as the summary cost entries, are shown in the "Cost Estimate Report, Summary by WBS Rollup Levels", Table B.3 pages B-7 through B-34. The "Cost Estimate Detail Listing" data is included in Table B.4, pages B-35 and following, and includes the detail cost entry data sheet for each of the lowest WBS levels of the project.

Table B.1
Cost Estimate Summary

WBS					All costs shown in FY1992 K$
1..	ALS Beamlines Initiative				40,406.9
1.1.	Management & Administrative Support				2,004.1
1.2.	ALS Beamlines Systems				26,543.7
1.2.1	Dynamical Phenomena U8 & BM Beamlines			7,185.2	
1.2.1.1	Engineering, Design, & Inspection		1,547.9		
1.2.1.2	Construction		5,637.3		
1.2.1.2.1	U8 Undulator	1,110.6			
1.2.1.2.2	U8 Front End	587.4			
1.2.1.2.3	U8 Branchline	1,595.7			
1.2.1.2.4	Bend Magnet Front End	368.3			
1.2.1.2.5	Bend Magnet Branchline	1,975.3			
1.2.2	Chemical Dynamics U10 Beamline			4,785.9	
1.2.2.1	Engineering, Design, & Inspection		1,036.8		
1.2.2.2	Construction		3,749.1		
1.2.2.2.1	U10 Undulator	1,411.3			
1.2.2.2.2	U10 Front End	587.4			
1.2.2.2.3	U10 Branchline	1,750.5			
1.2.3	Circular Polarization UX Beamline			4,876.6	
1.2.3.1	Engineering, Design, & Inspection		1,057.5		
1.2.3.2	Construction		3,819.1		
1.2.3.2.1	UX Undulator	1,636.0			
1.2.3.2.2	UX Front End	587.4			
1.2.3.2.3	UX Branchline	1,595.7			
1.2.4	Spectroscopy W16 Beamline			5,509.1	
1.2.4.1	Engineering, Design, & Inspection		1,199.5		
1.2.4.2	Construction		4,309.5		
1.2.4.2.1	W16 Wiggler	1,059.2			
1.2.4.2.2	W16 Front End	622.4			
1.2.4.2.3	W16 Spectroscopy Branchline	1,260.7			
1.2.4.2.4	W16 Crystallography Branchline	1,367.3			
1.2.5	Soft X-ray Microscopy Beamline			4,186.9	
1.2.5.1	Engineering, Design, & Inspection		898.0		
1.2.5.2	Construction		3,288.9		
1.2.5.2.1	U3.65 Undulator	1,104.3			
1.2.5.2.2	U3.65 Front End	587.4			
1.2.5.2.3	U3.65 Branchline	1,597.3			
1.3.	Conventional Construction				4,280.3
1.3.1	Engineering, Design, & Inspection			543.9	
1.3.1.1	LBL Activities		168.9		
1.3.1.2	AE Activities		375.0		
1.3.2	Construction			3,736.4	
1.3.2.1	Bldg. 6 Construction		2,515.6		
1.3.2.2	Special Building Facilities		452.4		
1.3.2.3	Utilities; Elect Transformer/Switchgear		657.7		
1.3.2.4	Standard Equipment		110.7		
1.4.	Contingency				7,578.8
1.4.1	Project Management & Support			436.5	
1.4.2	ALS Beamline Systems			6,392.3	
1.4.3	Conventional Facilities			750.0	

Table B.2
Contingency Analysis Table

(All costs shown in FY1992 K$)

WBS No.	Description	Base Costs			Contingencies		
					% Conting.	K$ Conting	K$ Conting Subtotal
1..	ALS Beamlines Initiative			40,407			7,579
1.1.	Management & Administrative Support			2,004	22		437
1.2.	ALS Beamlines Systems			26,544			6,393
1.2.1	Dynamical Phenomena Beamlines		7,185				1,686
1.2.1.1	Engineering, Design, & Inspection	1,548					373
1.2.1.1.1	EDI, U8 Undulator	333			25	83	
1.2.1.1.2	EDI, U8 Beamline Front End	88			15	13	
1.2.1.1.3	EDI, U8 Branchline	479			25	120	
1.2.1.1.4	EDI, Bend Magnet Frontend	55			15	8	
1.2.1.1.5	EDI, Bend Magnet Branchline	593			25	148	
1.2.1.2	Dynamical Phenomena BL Constr.	5,637					1,314
1.2.1.2.1	U8 Undulator	1,111			25	278	
1.2.1.2.2	U8 Beamline Front End	587			15	88	
1.2.1.2.3	U8 Branchline	1,596			25	399	
1.2.1.2.4	Bend Magnet Frontend	368			15	55	
1.2.1.2.5	Bend Magnet Branchline	1,975			25	494	
1.2.2	Chemical Dynamics Beamline		4,786				1,129
1.2.2.1	Engineering, Design, & Inspection	1,037					251
1.2.2.1.1	EDI, U10 Undulator	423			25	106	
1.2.2.1.2	EDI, U10 Beamline Front End	88			15	13	
1.2.2.1.3	EDI, U10 Branchline	526			25	131	
1.2.2.2	Chemical Dynamics BL Constr.	3,749					879
1.2.2.2.1	U10 Undulator	1,411			25	353	
1.2.2.2.2	U10 Beamline Front End	587			15	88	
1.2.2.2.3	U10 Branchline	1,751			25	438	
1.2.3	Circular Polarization Beamline		4,877				1,152
1.2.3.1	Engineering, Design, & Inspection	1,058					256
1.2.3.1.1	EDI, UX Undulator	491			25	123	
1.2.3.1.2	EDI, UX Beamline Front End	88			15	13	
1.2.3.1.3	EDI, UX Branchline	479			25	120	
1.2.3.2	Circular Polarization BL Constr.	3,819					896
1.2.3.2.1	UX Undulator	1,636			25	409	
1.2.3.2.2	UX Beamline Front End	587			15	88	
1.2.3.2.3	UX Branchline	1,596			25	399	

Table B.2, Continued
Contingency Analysis Table

(All costs shown in FY1992 K$)

						% Conting.	K$ Conting	K$ Conting Subtotal
1.2.4	Spectroscopy Beamlines			5,509				1,375
1.2.4.1	Engineering, Design, & Inspection		1,200					306
1.2.4.1.1	EDI, W16 Wiggler	318				30	95	
1.2.4.1.2	EDI, W16 Beamline Front End	93				15	14	
1.2.4.1.3	EDI, W16 Branchline	788				25	197	
1.2.4.2	Spectroscopy BL Constr.		4,310					1,068
1.2.4.2.1	W16 Wiggler	1,059				30	318	
1.2.4.2.2	W16 Beamline Front End	622				15	93	
1.2.4.2.3	W16 Spectroscopy Branchline	1,261				25	315	
1.2.4.2.4	W16 Crystallography Branchline	1,367				25	342	
1.2.5	Soft X-ray Microscopy Beamline			4,187				1,051
1.2.5.1	Engineering, Design, & Inspection		898					232
1.2.5.1.1	EDI, U3.65 Undulator	331				30	99	
1.2.5.1.2	EDI, U3.65 Beamline Front End	88				15	13	
1.2.5.1.3	EDI, U3.65 Branchline	479				25	120	
1.2.5.2	Construction		3,288.9					819
1.2.5.2.1	U3.65 Undulator	1,104.3				30	331	
1.2.5.2.2	U3.65 Front End	587.4				15	88	
1.2.5.2.3	U3.65 Branchline	1,597.3				25	399	
1.3.	Conventional Facilities				4,280			750
1.3.1	Engineering, Design, & Inspection			544				109
1.3.1.1	LBL Activities		169			20	34	
1.3.1.2	Architecht/Engineering Activities		375			20	75	
1.3.2	Construction			3,736				641
1.3.2.1	Building 6 Construction		2,516			16	402	
1.3.2.2	Special Building Facilities		452			20	90	
1.3.2.3	Utilities; Elect Transformer/Switchgear		658			20	132	
1.3.2.4	Standard Equipment		111			15	17	
1.4.	Contingency				7,579			
1.4.1	Management & Support			437				
1.4.2	ALS Beamlines Systems			6,392				
1.4.3	Conventional Facilities			750				

Cost Estimate Report
Summary of Material and Labor in FY92K$
by Rollup Levels

Work Breakdown Structure #	Description					Material & Labor Total K$
** *						
1	ALS Beamlines Initiatives					40,406.50
** **						
1.1	Project Management and Administration				2,004.08	
** ***						
1.1.1	Project Direction and Management			1,404.97		
1.1.2	Project Office Services			599.12		
** **						
1.2	ALS Beamlines Systems				26,543.66	
** ***						
1.2.1	Dynamical Phenomena Beamlines			7,185.22		
** ****						
1.2.1.1	Dynamical Phenomena Beamlines EDI		1,547.89			
** *****						
1.2.1.1.1	U8 Undulator EDI	333.20				
1.2.1.1.2	U8 Front End EDI	88.10				
1.2.1.1.3	U8 Branchline EDI	478.76				
1.2.1.1.4	Bend Magnet Front End EDI	55.20				
1.2.1.1.5	Bend Magnet Branchline EDI	592.63				
** ****						
1.2.1.2	Dynamical Phenomena Beamlines Construction		5,637.33			
** *****						
1.2.1.2.1	U8 Undulator	1,110.63				
** ******						
1.2.1.2.1.1	Magnetic Structure	571.46				
** *******						
1.2.1.2.1.1.1	Magnetic Material	117.44				
1.2.1.2.1.1.2	Model-Pole & Pole Assembly (not req'd)	0.00				
1.2.1.2.1.1.3	Pole Assemblies	166.39				
1.2.1.2.1.1.4	End Pole Assemblies	76.50				
1.2.1.2.1.1.5	Backing Beams	113.30				
1.2.1.2.1.1.6	Magnet Structure Assembly	55.46				
1.2.1.2.1.1.7	Magnetic Measurements: Mechanical	8.04				
1.2.1.2.1.1.8	Magnetic Measurements: Electrical	34.33				

Cost Estimate Report
Summary of Material and Labor in FY92K$
by Rollup Levels

Work Breakdown Structure #	Description				Material & Labor Total K$
** ******					
1.2.1.2.1.2	Support & Drive Systems		245.04		
** *******					
1.2.1.2.1.2.1	Support System Fabrication	104.10			
1.2.1.2.1.2.2	Drive System Fabrication	119.65			
1.2.1.2.1.2.3	Local Temperature Control Fabrication	21.29			
** ******					
1.2.1.2.1.3	Vacuum System		240.74		
** *******					
1.2.1.2.1.3.1	Vacuum Chamber	167.12			
1.2.1.2.1.3.2	Pumping Systems & Instrumentation	28.19			
1.2.1.2.1.3.3	Support Structure	14.84			
1.2.1.2.1.3.4	Vacuum Diagnostics	30.59			
** ******					
1.2.1.2.1.4	Motor Control System		33.79		
1.2.1.2.1.5	Installation		19.61		
** *****					
1.2.1.2.2	U8 Front End			587.37	
** ******					
1.2.1.2.2.1	Fixed Aperture		57.72		
** *******					
1.2.1.2.2.1.1	Aperture Plate	4.36			
1.2.1.2.2.1.2	Bellows	3.16			
1.2.1.2.2.1.3	Collimating Spool	4.35			
1.2.1.2.2.1.4	Isolation Valve	24.16			
1.2.1.2.2.1.5	Support Stand	10.24			
1.2.1.2.2.1.6	Assemble, Bakeout, Test	4.34			
1.2.1.2.2.1.7	Installation	7.10			
** ******					
1.2.1.2.2.2	Photon BPM #1		74.26		
** *******					
1.2.1.2.2.2.1	Fab/Buy Mech Parts & Subassy's	14.35			
1.2.1.2.2.2.2	Fab/Buy Electrical and Controls	26.89			
1.2.1.2.2.2.3	Fab/Buy Support Stand	6.31			
1.2.1.2.2.2.4	Bellows	8.84			
1.2.1.2.2.2.5	Assemble, Bakeout, Test (Assembly Shop)	8.56			

Cost Estimate Report
Summary of Material and Labor in FY92K$
by Rollup Levels

Work Breakdown Structure #	Description		Material & Labor Total K$
1.2.1.2.2.2.6	Installation	9.30	
** ******			
1.2.1.2.2.3	Photon Shutter		120.36
** *******			
1.2.1.2.2.3.1	Fab/Buy Mech Parts & Subassy's	23.96	
1.2.1.2.2.3.2	Fab/Buy Electrical and Controls	8.54	
1.2.1.2.2.3.3	Fab/Buy Vacuum Chamber & Supports	19.76	
1.2.1.2.2.3.4	Vacuum Pumping, Gauges, Controllers, P.S.	16.54	
1.2.1.2.2.3.5	Assemble, Bakeout, Test	14.79	
1.2.1.2.2.3.6	Installation	8.86	
1.2.1.2.2.3.7	Titanium Sublimation Pump	8.72	
1.2.1.2.2.3.8	Isolation Valve	19.20	
** ******			
1.2.1.2.2.4	Fast Valve		43.35
** *******			
1.2.1.2.2.4.1	Fast Valve	26.00	
1.2.1.2.2.4.2	Fab/Buy Electrical and Controls	2.89	
1.2.1.2.2.4.3	Bellows	3.64	
1.2.1.2.2.4.4	Aperture Plate	4.36	
1.2.1.2.2.4.5	Assemble, Bakeout, Test	3.95	
1.2.1.2.2.4.6	Installation	2.51	
** ******			
1.2.1.2.2.5	Personnel Safety Shutter		104.40
** *******			
1.2.1.2.2.5.1	Fab/Buy Mech Parts & Subassy's	21.32	
1.2.1.2.2.5.2	Fab/Buy Electrical and Controls	4.68	
1.2.1.2.2.5.3	Fab/Buy Vacuum Chamber & Supports	16.34	
1.2.1.2.2.5.4	Vacuum Pumping, Gauges, Controllers, P.S.	15.87	
1.2.1.2.2.5.5	Assemble, Bakeout, Test	14.23	
1.2.1.2.2.5.6	Installation	6.36	
1.2.1.2.2.5.7	Shield Wall Transition Spool	9.42	
1.2.1.2.2.5.8	Isolation Valve	16.20	
** ******			
1.2.1.2.2.6	Photon BPM #2		79.56
** *******			
1.2.1.2.2.6.1	Fab/Buy Mech Parts & Subassy's	16.06	
1.2.1.2.2.6.2	Fab/Buy Electrical and Controls	30.55	

Cost Estimate Report
Summary of Material and Labor in FY92K$
by Rollup Levels

Work Breakdown Structure #	Description			Material & Labor Total K$
1.2.1.2.2.6.3	Fab/Buy Support Stand	6.31		
1.2.1.2.2.6.4	Bellows	8.84		
1.2.1.2.2.6.5	Assemble, Bakeout, Test	8.56		
1.2.1.2.2.6.6	Installation	9.24		
** ******				
1.2.1.2.2.7	Vacuum System, Utilities & Installation		85.14	
** *******				
1.2.1.2.2.7.1	Fab/Buy Mech Parts & Subassy's	7.89		
1.2.1.2.2.7.2	Fab/Buy Electical and Controls	19.09		
1.2.1.2.2.7.3	Fab/Buy Vacuum Chamber & Supports	6.82		
1.2.1.2.2.7.4	Vacuum Pumping, Gauges, Controllers, P.S.	14.25		
1.2.1.2.2.7.5	Assemble, Bakeout, Test	11.20		
1.2.1.2.2.7.6	Installation	25.89		
** ******				
1.2.1.2.2.8	Safety Systems		22.57	
** *****				
1.2.1.2.3	U8 Undulator Branch Line			1,595.69
** ******				
1.2.1.2.3.1	Horizontal Beam Defining Aperture (HBDA)		147.27	
** *******				
1.2.1.2.3.1.1	Fab/Buy Machined Parts & Subassy's	23.96		
1.2.1.2.3.1.2	Fab/Buy Electrical and Controls	16.19		
1.2.1.2.3.1.3	Fab/Buy Vacuum Chamber & Supports	19.76		
1.2.1.2.3.1.4	Vacuum Pumping, Gauges, Controllers, P.S.	16.30		
1.2.1.2.3.1.5	Assemble, Bakeout, Test	14.64		
1.2.1.2.3.1.6	Installation	7.41		
1.2.1.2.3.1.7	Beam Diagnostic Device	9.43		
1.2.1.2.3.1.8	Collimating Spool	4.05		
1.2.1.2.3.1.9	Bellows	3.64		
1.2.1.2.3.1.10	Titanium Sublimation Pump	15.70		
1.2.1.2.3.1.11	Isolation Valve	16.20		
** ******				
1.2.1.2.3.2	M1 Spherical Condensing Mirror		185.91	

Cost Estimate Report
Summary of Material and Labor in FY92K$
by Rollup Levels

Work Breakdown Structure #	Description		Material & Labor Total K$
** *******			
1.2.1.2.3.2.1	Fab/Buy Mech Parts & Subassy's	63.65	
1.2.1.2.3.2.2	Fab/Buy Electrical and Controls	25.28	
1.2.1.2.3.2.3	Fab/Buy Vacuum Chamber & Supports	30.02	
1.2.1.2.3.2.4	Vacuum Pumping, Gauges, Controllers, P.S.	15.60	
1.2.1.2.3.2.5	Assemble, Bakeout, Test	15.01	
1.2.1.2.3.2.6	Installation	9.92	
1.2.1.2.3.2.7	Bellows	4.99	
1.2.1.2.3.2.8	Collimating Spool	5.10	
1.2.1.2.3.2.9	Isolation Valve	16.34	
** ******			
1.2.1.2.3.3	M2 Spherical Condensing Mirror		188.42
** *******			
1.2.1.2.3.3.1	Fab/Buy Mech Parts & Subassy's	65.57	
1.2.1.2.3.3.2	Fab/Buy Electrical and Controls	25.28	
1.2.1.2.3.3.3	Fab/Buy Vacuum Chamber & Supports	26.72	
1.2.1.2.3.3.4	Vacuum Pumping, Gauges, Controllers, P.S.	17.55	
1.2.1.2.3.3.5	Assemble, Bakeout, Test	15.01	
1.2.1.2.3.3.6	Installation	9.92	
1.2.1.2.3.3.7	Bellows	8.99	
1.2.1.2.3.3.8	Collimating Spool	3.04	
1.2.1.2.3.3.9	Isolation Valve	16.34	
** ******			
1.2.1.2.3.5	Monochromator (LBL-SGM)		748.76
** *******			
1.2.1.2.3.5.1	Entrance Slit Assembly	91.70	
** ********			
1.2.1.2.3.5.1.1	Bellows	6.29	
1.2.1.2.3.5.1.2	Slit Mechanical Assembly	21.34	
1.2.1.2.3.5.1.3	Support Systems	15.69	
1.2.1.2.3.5.1.4	Spools	6.05	
1.2.1.2.3.5.1.5	Vacuum System	12.03	
1.2.1.2.3.5.1.6	Isolation Valve	11.20	
1.2.1.2.3.5.1.7	Assemble and Test	9.91	
1.2.1.2.3.5.1.8	Install and Align	9.20	
** *******			
1.2.1.2.3.5.2	Grating Chamber Assembly	490.03	

Cost Estimate Report
Summary of Material and Labor in FY92K$
by Rollup Levels

Work Breakdown Structure #	Description			Material & Labor Total K$
** ********				
1.2.1.2.3.5.2.1	Bellows	6.29		
1.2.1.2.3.5.2.2	Gratings	123.59		
1.2.1.2.3.5.2.3	Grating Mechanical Assembly	92.77		
1.2.1.2.3.5.2.4	Mask & VBDA	18.31		
1.2.1.2.3.5.2.5	Electrical & Controls	75.53		
1.2.1.2.3.5.2.6	Vacuum System	30.53		
1.2.1.2.3.5.2.7	Support Systems	91.02		
1.2.1.2.3.5.2.8	Assemble & Test	36.05		
1.2.1.2.3.5.2.9	Install & Align	15.93		
** *******				
1.2.1.2.3.5.3	Exit Slit Assembly		167.03	
** ********				
1.2.1.2.3.5.3.1	Bellows	23.22		
1.2.1.2.3.5.3.2	Isolation Valves	22.39		
1.2.1.2.3.5.3.3	Vacuum System	16.73		
1.2.1.2.3.5.3.4	Slit Mechanical Assembly	73.25		
1.2.1.2.3.5.3.5	Support Systems	10.32		
1.2.1.2.3.5.3.6	Assemble & Test	12.78		
1.2.1.2.3.5.3.7	Install & Align	8.33		
** ******				
1.2.1.2.3.8	Branch Line Diagnostics			46.39
** *******				
1.2.1.2.3.8.1	Fab/Buy Mech Parts & Subassy's		11.94	
1.2.1.2.3.8.2	Fab/Buy Electrical & Controls		0.00	
1.2.1.2.3.8.3	Fab/Buy Vacuum Chamber & Supports		12.62	
1.2.1.2.3.8.4	Vacuum Pumping, Gauges, Controllers, P.S.		10.73	
1.2.1.2.3.8.5	Assemble, Bakeout, Test		7.73	
1.2.1.2.3.8.6	Installation		3.36	
** ******				
1.2.1.2.3.9	Vacuum System, Controls, & Installation			132.36
** *******				
1.2.1.2.3.9.1	Fab/Buy Mech Parts & Subassy's		4.95	
1.2.1.2.3.9.2	Fab/Buy Electrical and Controls		79.82	
1.2.1.2.3.9.3	Fab/Buy Vacuum Chamber & Supports		7.54	
1.2.1.2.3.9.4	Vacuum Pumping, Gauges, Controllers, P.S.		0.00	
1.2.1.2.3.9.5	Assemble, Bakeout, Test		16.94	
1.2.1.2.3.9.6	Installation		23.11	

Cost Estimate Report
Summary of Material and Labor in FY92K$
by Rollup Levels

Work Breakdown Structure #	Description			Material & Labor Total K$
** ******				
1.2.1.2.3.10	Branch Line Safety Systems		12.55	
1.2.1.2.3.11	U8 Branchline Post-Monochromator Optics		134.03	
** *******				
1.2.1.2.3.11.1	Vertical Refocus Mirror	85.54		
1.2.1.2.3.11.2	Diagnostic Systems	21.26		
1.2.1.2.3.11.3	Beam Transport	27.23		
** *****				
1.2.1.2.4	Bend Magnet Front End			368.31
** ******				
1.2.1.2.4.1	Photon Shutter Assembly		183.32	
** *******				
1.2.1.2.4.1.1	Aperture Assemblies 1 & 2	9.42		
1.2.1.2.4.1.2	Bellows 1 & 2	7.80		
1.2.1.2.4.1.3	Isolation Valves 1 & 2	35.98		
1.2.1.2.4.1.4	Photon Shutter	24.21		
1.2.1.2.4.1.5	Vacuum Systems	21.17		
1.2.1.2.4.1.6	Photon Shutter Support System	17.57		
1.2.1.2.4.1.7	Fast Shutter	34.03		
1.2.1.2.4.1.8	Collimation Spool	5.61		
1.2.1.2.4.1.9	Cleaning, Assemble, Bakeout & Test	10.80		
1.2.1.2.4.1.10	Installation	16.74		
** ******				
1.2.1.2.4.2	Personnel Safety Shutter Assembly		114.99	
** *******				
1.2.1.2.4.2.1	Personnel Safety Shutter	35.09		
1.2.1.2.4.2.2	Shield Wall Transition	7.76		
1.2.1.2.4.2.3	Safety Shutter Support System	14.24		
1.2.1.2.4.2.4	Isolation Valve	13.62		
1.2.1.2.4.2.5	Vacuum Systems	16.75		
1.2.1.2.4.2.6	Cleaning, Assembly, Bakeout and Test	10.80		
1.2.1.2.4.2.7	Installation	16.74		
** ******				
1.2.1.2.4.3	Photon Beam Position Mon. (User Option)		0.00	
1.2.1.2.4.4	Misc. Mechanical & Electrical		70.00	

Cost Estimate Report
Summary of Material and Labor in FY92K$
by Rollup Levels

Work Breakdown Structure #	Description			Material & Labor Total K$
** *******				
1.2.1.2.4.4.1	Mechanical, Electrical & Controls	53.18		
1.2.1.2.4.4.2	Safety Systems	16.82		
** *****				
1.2.1.2.5	Bend Magnet Branchline			1,975.34
** ******				
1.2.1.2.5.1	Horizontal Beam Defining Aperture (HBDA)		147.27	
** *******				
1.2.1.2.5.1.1	Fab/Buy Machined Parts & Subassy's	23.96		
1.2.1.2.5.1.2	Fab/Buy Electrical and Controls	16.19		
1.2.1.2.5.1.3	Fab/Buy Vacuum Chamber & Supports	19.76		
1.2.1.2.5.1.4	Vacuum Pumping, Gauges, Controllers, P.S.	16.30		
1.2.1.2.5.1.5	Assemble, Bakeout, Test	14.64		
1.2.1.2.5.1.6	Installation	7.41		
1.2.1.2.5.1.7	Beam Diagnostic Device	9.43		
1.2.1.2.5.1.8	Collimating Spool	4.05		
1.2.1.2.5.1.9	Bellows	3.64		
1.2.1.2.5.1.10	Titanium Sublimation Pump	15.70		
1.2.1.2.5.1.11	Isolation Valve	16.20		
** ******				
1.2.1.2.5.2	M1 Spherical Condensing Mirror		185.91	
** *******				
1.2.1.2.5.2.1	Fab/Buy Mech Parts & Subassy's	63.65		
1.2.1.2.5.2.2	Fab/Buy Electrical and Controls	25.28		
1.2.1.2.5.2.3	Fab/Buy Vacuum Chamber & Supports	30.02		
1.2.1.2.5.2.4	Vacuum Pumping, Gauges, Controllers, P.S.	15.60		
1.2.1.2.5.2.5	Assemble, Bakeout, Test	15.01		
1.2.1.2.5.2.6	Installation	9.92		
1.2.1.2.5.2.7	Bellows	4.99		
1.2.1.2.5.2.8	Collimating Spool	5.10		
1.2.1.2.5.2.9	Isolation Valve	16.34		
** ******				
1.2.1.2.5.3	M2 Spherical Condensing Mirror		188.42	
** *******				
1.2.1.2.5.3.1	Fab/Buy Mech Parts & Subassy's	65.57		

Cost Estimate Report
Summary of Material and Labor in FY92K$
by Rollup Levels

Work Breakdown Structure #	Description			Material & Labor Total K$
1.2.1.2.5.3.2	Fab/Buy Electrical and Controls		25.28	
1.2.1.2.5.3.3	Fab/Buy Vacuum Chamber & Supports		26.72	
1.2.1.2.5.3.4	Vacuum Pumping, Gauges, Controllers, P.S.		17.55	
1.2.1.2.5.3.5	Assemble, Bakeout, Test		15.01	
1.2.1.2.5.3.6	Installation		9.92	
1.2.1.2.5.3.7	Bellows		8.99	
1.2.1.2.5.3.8	Collimating Spool		3.04	
1.2.1.2.5.3.9	Isolation Valve		16.34	
** ******				
1.2.1.2.5.5	Monochromator (LBL-SGM)			748.76
** *******				
1.2.1.2.5.5.1	Entrance Slit Assembly		91.70	
** ********				
1.2.1.2.5.5.1.1	Bellows	6.29		
1.2.1.2.5.5.1.2	Slit Mechanical Assembly	21.34		
1.2.1.2.5.5.1.3	Support Systems	15.69		
1.2.1.2.5.5.1.4	Spools	6.05		
1.2.1.2.5.5.1.5	Vacuum System	12.03		
1.2.1.2.5.5.1.6	Isolation Valve	11.20		
1.2.1.2.5.5.1.7	Assemble and Test	9.91		
1.2.1.2.5.5.1.8	Install and Align	9.20		
** *******				
1.2.1.2.5.5.2	Grating Chamber Assembly		490.03	
** ********				
1.2.1.2.5.5.2.1	Bellows	6.29		
1.2.1.2.5.5.2.2	Gratings	123.59		
1.2.1.2.5.5.2.3	Grating Mechanical Assembly	92.77		
1.2.1.2.5.5.2.4	Mask & VBDA	18.31		
1.2.1.2.5.5.2.5	Electrical & Controls	75.53		
1.2.1.2.5.5.2.6	Vacuum System	30.53		
1.2.1.2.5.5.2.7	Support Systems	91.02		
1.2.1.2.5.5.2.8	Assemble & Test	36.05		
1.2.1.2.5.5.2.9	Install & Align	15.93		
** *******				
1.2.1.2.5.5.3	Exit Slit Assembly		167.03	
** ********				
1.2.1.2.5.5.3.1	Bellows	23.22		
1.2.1.2.5.5.3.2	Isolation Valves	22.39		
1.2.1.2.5.5.3.3	Vacuum System	16.73		

Cost Estimate Report
Summary of Material and Labor in FY92K$
by Rollup Levels

Work Breakdown Structure #	Description				Material & Labor Total K$
1.2.1.2.5.5.3.4	Slit Mechanical Assembly	73.25			
1.2.1.2.5.5.3.5	Support Systems	10.32			
1.2.1.2.5.5.3.6	Assemble & Test	12.78			
1.2.1.2.5.5.3.7	Install & Align	8.33			
** ******					
1.2.1.2.5.8	Branch Line Diagnostics			46.39	
** *******					
1.2.1.2.5.8.1	Fab/Buy Mech Parts & Subassy's		11.94		
1.2.1.2.5.8.2	Fab/Buy Electrical & Controls		0.00		
1.2.1.2.5.8.3	Fab/Buy Vacuum Chamber & Supports		12.62		
1.2.1.2.5.8.4	Vacuum Pumping, Gauges, Controllers, P.S.		10.73		
1.2.1.2.5.8.5	Assemble, Bakeout, Test		7.73		
1.2.1.2.5.8.6	Installation		3.36		
** ******					
1.2.1.2.5.9	Vacuum System, Controls, & Installation			132.36	
** *******					
1.2.1.2.5.9.1	Fab/Buy Mech Parts & Subassy's		4.95		
1.2.1.2.5.9.2	Fab/Buy Electrical and Controls		79.82		
1.2.1.2.5.9.3	Fab/Buy Vacuum Chamber & Supports		7.54		
1.2.1.2.5.9.4	Vacuum Pumping, Gauges, Controllers, P.S.		0.00		
1.2.1.2.5.9.5	Assemble, Bakeout, Test		16.94		
1.2.1.2.5.9.6	Installation		23.11		
** ******					
1.2.1.2.5.10	Branch Line Safety Systems			12.55	
1.2.1.2.5.11	Bend Magnet Branchline Delay Line			379.65	
1.2.1.2.5.12	Bend Magnet Brnchln Post-Monochromator Optics			134.03	
** *******					
1.2.1.2.5.12.1	Vertical Refocus Mirror		85.54		
1.2.1.2.5.12.2	Diagnostic Systems		21.26		
1.2.1.2.5.12.3	Beam Transport		27.23		
** ***					
1.2.2	Chemical Dynamics Beamline				4,785.93
** ****					
1.2.2.1	Chemical Dynamics EDI				1,036.78

Cost Estimate Report
Summary of Material and Labor in FY92K$
by Rollup Levels

Work Breakdown Structure #	Description				Material & Labor Total K$
** *****					
1.2.2.1.1	U10 Undulator EDI			423.40	
1.2.2.1.2	U10 Front End EDI			88.10	
1.2.2.1.3	U10 Branchline EDI			525.28	
** ****					
1.2.2.2	Chemical Dynamics Beamline Construction				3,749.14
** *****					
1.2.2.2.1	U10 Undulator			1,411.26	
** ******					
1.2.2.2.1.1	Magnetic Structure		851.08		
** *******					
1.2.2.2.1.1.1	Magnetic Material	398.01			
1.2.2.2.1.1.2	Model-Pole & Pole Assembly (not req'd)	0.00			
1.2.2.2.1.1.3	Pole Assemblies	168.17			
1.2.2.2.1.1.4	End Pole Assemblies	57.98			
1.2.2.2.1.1.5	Backing Beams	110.26			
1.2.2.2.1.1.6	Magnet Structure Assembly	54.84			
1.2.2.2.1.1.7	Magnetic Measurements: Mechanical	23.18			
1.2.2.2.1.1.8	Magnetic Measurements: Electrical	38.65			
** ******					
1.2.2.2.1.2	Support & Drive Systems		245.04		
** *******					
1.2.2.2.1.2.1	Support System Fabrication	104.10			
1.2.2.2.1.2.2	Drive System Fabrication	119.65			
1.2.2.2.1.2.3	Local Temperature Control Fabrication	21.29			
** ******					
1.2.2.2.1.3	Vacuum System		261.74		
** *******					
1.2.2.2.1.3.1	Vacuum Chamber	167.12			
1.2.2.2.1.3.2	Pumping Systems & Instrumentation	49.19			
1.2.2.2.1.3.3	Support Structure	14.84			
1.2.2.2.1.3.4	Vacuum Diagnostics	30.59			
** ******					
1.2.2.2.1.4	Motor Control System		33.79		
1.2.2.2.1.5	Installation		19.61		

Cost Estimate Report
Summary of Material and Labor in FY92K$
by Rollup Levels

Work Breakdown Structure #	Description			Material & Labor Total K$
** *****				
1.2.2.2.2	U10 Front End			587.37
** ******				
1.2.2.2.2.1	Fixed Aperture		57.72	
** *******				
1.2.2.2.2.1.1	Aperture Plate	4.36		
1.2.2.2.2.1.2	Bellows	3.16		
1.2.2.2.2.1.3	Collimating Spool	4.35		
1.2.2.2.2.1.4	Isolation Valve	24.16		
1.2.2.2.2.1.5	Support Stand	10.24		
1.2.2.2.2.1.6	Assemble, Bakeout, Test	4.34		
1.2.2.2.2.1.7	Installation	7.10		
** ******				
1.2.2.2.2.2	Photon BPM #1		74.26	
** *******				
1.2.2.2.2.2.1	Fab/Buy Mech Parts & Subassy's	14.35		
1.2.2.2.2.2.2	Fab/Buy Electrical and Controls	26.89		
1.2.2.2.2.2.3	Fab/Buy Support Stand	6.31		
1.2.2.2.2.2.4	Bellows	8.84		
1.2.2.2.2.2.5	Assemble, Bakeout, Test (Assembly Shop)	8.56		
1.2.2.2.2.2.6	Installation	9.30		
** ******				
1.2.2.2.2.3	Photon Shutter		120.36	
** *******				
1.2.2.2.2.3.1	Fab/Buy Mech Parts & Subassy's	23.96		
1.2.2.2.2.3.2	Fab/Buy Electrical and Controls	8.54		
1.2.2.2.2.3.3	Fab/Buy Vacuum Chamber & Supports	19.76		
1.2.2.2.2.3.4	Vacuum Pumping, Gauges, Controllers, P.S.	16.54		
1.2.2.2.2.3.5	Assemble, Bakeout, Test	14.79		
1.2.2.2.2.3.6	Installation	8.86		
1.2.2.2.2.3.7	Titanium Sublimation Pump	8.72		
1.2.2.2.2.3.8	Isolation Valve	19.20		
** ******				
1.2.2.2.2.4	Fast Valve		43.35	
** *******				
1.2.2.2.2.4.1	Fast Valve	26.00		

Cost Estimate Report
Summary of Material and Labor in FY92K$
by Rollup Levels

Work Breakdown Structure #	Description		Material & Labor Total K$
1.2.2.2.2.4.2	Fab/Buy Electrical and Controls	2.89	
1.2.2.2.2.4.3	Bellows	3.64	
1.2.2.2.2.4.4	Aperture Plate	4.36	
1.2.2.2.2.4.5	Assemble, Bakeout, Test	3.95	
1.2.2.2.2.4.6	Installation	2.51	
** ******			
1.2.2.2.2.5	Personnel Safety Shutter		104.40
** *******			
1.2.2.2.2.5.1	Fab/Buy Mech Parts & Subassy's	21.32	
1.2.2.2.2.5.2	Fab/Buy Electrical and Controls	4.68	
1.2.2.2.2.5.3	Fab/Buy Vacuum Chamber & Supports	16.34	
1.2.2.2.2.5.4	Vacuum Pumping, Gauges, Controllers, P.S.	15.87	
1.2.2.2.2.5.5	Assemble, Bakeout, Test	14.23	
1.2.2.2.2.5.6	Installation	6.36	
1.2.2.2.2.5.7	Shield Wall Transition Spool	9.42	
1.2.2.2.2.5.8	Isolation Valve	16.20	
** ******			
1.2.2.2.2.6	Photon BPM #2		79.56
** *******			
1.2.2.2.2.6.1	Fab/Buy Mech Parts & Subassy's	16.06	
1.2.2.2.2.6.2	Fab/Buy Electrical and Controls	30.55	
1.2.2.2.2.6.3	Fab/Buy Support Stand	6.31	
1.2.2.2.2.6.4	Bellows	8.84	
1.2.2.2.2.6.5	Assemble, Bakeout, Test	8.56	
1.2.2.2.2.6.6	Installation	9.24	
** ******			
1.2.2.2.2.7	Vacuum System, Utilities & Installation		85.14
** *******			
1.2.2.2.2.7.1	Fab/Buy Mech Parts & Subassy's	7.89	
1.2.2.2.2.7.2	Fab/Buy Electical and Controls	19.09	
1.2.2.2.2.7.3	Fab/Buy Vacuum Chamber & Supports	6.82	
1.2.2.2.2.7.4	Vacuum Pumping, Gauges, Controllers, P.S.	14.25	
1.2.2.2.2.7.5	Assemble, Bakeout, Test	11.20	
1.2.2.2.2.7.6	Installation	25.89	
** ******			
1.2.2.2.2.8	Safety Systems		22.57

Cost Estimate Report
Summary of Material and Labor in FY92K$
by Rollup Levels

Work Breakdown Structure #	Description			Material & Labor Total K$
** *****				
1.2.2.2.3	U10 Branchline		1,750.52	
** ******				
1.2.2.2.3.1	Horiz. & Vert. Beam Defining Apertures	122.40		
1.2.2.2.3.2	M1 Mirror	145.39		
1.2.2.2.3.3	M2 Mirror	121.44		
1.2.2.2.3.4	M3 Mirror	84.03		
1.2.2.2.3.5	Monochromator (NIM)	464.25		
1.2.2.2.3.6	M4 Mirror	77.51		
1.2.2.2.3.7	M5 Mirror	72.70		
1.2.2.2.3.8	Branch Line Diagnostics	64.80		
1.2.2.2.3.9	Vacuum System: Controls & Installation	190.45		
1.2.2.2.3.10	Branch Line Safety Systems	12.18		
1.2.2.2.3.11	Harmonic Suppression & Optical Filters	145.37		
1.2.2.2.3.12	Secondary Branchline	250.00		
** ***				
1.2.3	Circular Polarization Beamline			4,876.62
** ****				
1.2.3.1	Circular Polarization EDI		1,057.54	
** *****				
1.2.3.1.1	UX Undulator EDI		490.78	
1.2.3.1.2	UX Front End EDI		88.10	
1.2.3.1.3	UX Branchline EDI		478.66	
** ****				
1.2.3.2	Circular Polarization Beamline Construction		3,819.08	
** *****				
1.2.3.2.1	UX Undulator		1,636.02	
1.2.3.2.2	UX Front End		587.37	
** ******				
1.2.3.2.2.1	Fixed Aperture	57.72		
** *******				
1.2.3.2.2.1.1	Aperture Plate	4.36		
1.2.3.2.2.1.2	Bellows	3.16		
1.2.3.2.2.1.3	Collimating Spool	4.35		
1.2.3.2.2.1.4	Isolation Valve	24.16		

Cost Estimate Report
Summary of Material and Labor in FY92K$
by Rollup Levels

Work Breakdown Structure #	Description		Material & Labor Total K$
1.2.3.2.2.1.5	Support Stand	10.24	
1.2.3.2.2.1.6	Assemble, Bakeout, Test	4.34	
1.2.3.2.2.1.7	Installation	7.10	
** ******			
1.2.3.2.2.2	Photon BPM #1		74.26
** *******			
1.2.3.2.2.2.1	Fab/Buy Mech Parts & Subassy's	14.35	
1.2.3.2.2.2.2	Fab/Buy Electrical and Controls	26.89	
1.2.3.2.2.2.3	Fab/Buy Support Stand	6.31	
1.2.3.2.2.2.4	Bellows	8.84	
1.2.3.2.2.2.5	Assemble, Bakeout, Test (Assembly Shop)	8.56	
1.2.3.2.2.2.6	Installation	9.30	
** ******			
1.2.3.2.2.3	Photon Shutter		120.36
** *******			
1.2.3.2.2.3.1	Fab/Buy Mech Parts & Subassy's	23.96	
1.2.3.2.2.3.2	Fab/Buy Electrical and Controls	8.54	
1.2.3.2.2.3.3	Fab/Buy Vacuum Chamber & Supports	19.76	
1.2.3.2.2.3.4	Vacuum Pumping, Gauges, Controllers, P.S.	16.54	
1.2.3.2.2.3.5	Assemble, Bakeout, Test	14.79	
1.2.3.2.2.3.6	Installation	8.86	
1.2.3.2.2.3.7	Titanium Sublimation Pump	8.72	
1.2.3.2.2.3.8	Isolation Valve	19.20	
** ******			
1.2.3.2.2.4	Fast Valve		43.35
** *******			
1.2.3.2.2.4.1	Fast Valve	26.00	
1.2.3.2.2.4.2	Fab/Buy Electrical and Controls	2.89	
1.2.3.2.2.4.3	Bellows	3.64	
1.2.3.2.2.4.4	Aperture Plate	4.36	
1.2.3.2.2.4.5	Assemble, Bakeout, Test	3.95	
1.2.3.2.2.4.6	Installation	2.51	
** ******			
1.2.3.2.2.5	Personnel Safety Shutter		104.40
** *******			
1.2.3.2.2.5.1	Fab/Buy Mech Parts & Subassy's	21.32	
1.2.3.2.2.5.2	Fab/Buy Electrical and Controls	4.68	

Cost Estimate Report
Summary of Material and Labor in FY92K$
by Rollup Levels

Work Breakdown Structure #	Description			Material & Labor Total K$
1.2.3.2.2.5.3	Fab/Buy Vacuum Chamber & Supports	16.34		
1.2.3.2.2.5.4	Vacuum Pumping, Gauges, Controllers, P.S.	15.87		
1.2.3.2.2.5.5	Assemble, Bakeout, Test	14.23		
1.2.3.2.2.5.6	Installation	6.36		
1.2.3.2.2.5.7	Shield Wall Transition Spool	9.42		
1.2.3.2.2.5.8	Isolation Valve	16.20		
** ******				
1.2.3.2.2.6	Photon BPM #2		79.56	
** *******				
1.2.3.2.2.6.1	Fab/Buy Mech Parts & Subassy's	16.06		
1.2.3.2.2.6.2	Fab/Buy Electrical and Controls	30.55		
1.2.3.2.2.6.3	Fab/Buy Support Stand	6.31		
1.2.3.2.2.6.4	Bellows	8.84		
1.2.3.2.2.6.5	Assemble, Bakeout, Test	8.56		
1.2.3.2.2.6.6	Installation	9.24		
** ******				
1.2.3.2.2.7	Vacuum System, Utilities & Installation		85.14	
** *******				
1.2.3.2.2.7.1	Fab/Buy Mech Parts & Subassy's	7.89		
1.2.3.2.2.7.2	Fab/Buy Electical and Controls	19.09		
1.2.3.2.2.7.3	Fab/Buy Vacuum Chamber & Supports	6.82		
1.2.3.2.2.7.4	Vacuum Pumping, Gauges, Controllers, P.S.	14.25		
1.2.3.2.2.7.5	Assemble, Bakeout, Test	11.20		
1.2.3.2.2.7.6	Installation	25.89		
** ******				
1.2.3.2.2.8	Safety Systems		22.57	
** *****				
1.2.3.2.3	UX Branchline			1,595.69
** ******				
1.2.3.2.3.1	Horizontal Beam Defining Aperture (HBDA)		147.27	
** *******				
1.2.3.2.3.1.1	Fab/Buy Machined Parts & Subassy's	23.96		
1.2.3.2.3.1.2	Fab/Buy Electrical and Controls	16.19		
1.2.3.2.3.1.3	Fab/Buy Vacuum Chamber & Supports	19.76		

Cost Estimate Report
Summary of Material and Labor in FY92K$
by Rollup Levels

Work Breakdown Structure #	Description		Material & Labor Total K$
1.2.3.2.3.1.4	Vacuum Pumping, Gauges, Controllers, P.S.	16.30	
1.2.3.2.3.1.5	Assemble, Bakeout, Test	14.64	
1.2.3.2.3.1.6	Installation	7.41	
1.2.3.2.3.1.7	Beam Diagnostic Device	9.43	
1.2.3.2.3.1.8	Collimating Spool	4.05	
1.2.3.2.3.1.9	Bellows	3.64	
1.2.3.2.3.1.10	Titanium Sublimation Pump	15.70	
1.2.3.2.3.1.11	Isolation Valve	16.20	
** ******			
1.2.3.2.3.2	M1 Spherical Condensing Mirror		185.91
** *******			
1.2.3.2.3.2.1	Fab/Buy Mech Parts & Subassy's	63.65	
1.2.3.2.3.2.2	Fab/Buy Electrical and Controls	25.28	
1.2.3.2.3.2.3	Fab/Buy Vacuum Chamber & Supports	30.02	
1.2.3.2.3.2.4	Vacuum Pumping, Gauges, Controllers, P.S.	15.60	
1.2.3.2.3.2.5	Assemble, Bakeout, Test	15.01	
1.2.3.2.3.2.6	Installation	9.92	
1.2.3.2.3.2.7	Bellows	4.99	
1.2.3.2.3.2.8	Collimating Spool	5.10	
1.2.3.2.3.2.9	Isolation Valve	16.34	
** ******			
1.2.3.2.3.3	M2 Spherical Condensing Mirror		188.42
** *******			
1.2.3.2.3.3.1	Fab/Buy Mech Parts & Subassy's	65.57	
1.2.3.2.3.3.2	Fab/Buy Electrical and Controls	25.28	
1.2.3.2.3.3.3	Fab/Buy Vacuum Chamber & Supports	26.72	
1.2.3.2.3.3.4	Vacuum Pumping, Gauges, Controllers, P.S.	17.55	
1.2.3.2.3.3.5	Assemble, Bakeout, Test	15.01	
1.2.3.2.3.3.6	Installation	9.92	
1.2.3.2.3.3.7	Bellows	8.99	
1.2.3.2.3.3.8	Collimating Spool	3.04	
1.2.3.2.3.3.9	Isolation Valve	16.34	
** ******			
1.2.3.2.3.5	Monochromator (LBL-SGM)		748.76
** *******			
1.2.3.2.3.5.1	Entrance Slit Assembly	91.70	

Cost Estimate Report
Summary of Material and Labor in FY92K$
by Rollup Levels

Work Breakdown Structure #	Description			Material & Labor Total K$
** ********				
1.2.3.2.3.5.1.1	Bellows	6.29		
1.2.3.2.3.5.1.2	Slit Mechanical Assembly	21.34		
1.2.3.2.3.5.1.3	Support Systems	15.69		
1.2.3.2.3.5.1.4	Spools	6.05		
1.2.3.2.3.5.1.5	Vacuum System	12.03		
1.2.3.2.3.5.1.6	Isolation Valve	11.20		
1.2.3.2.3.5.1.7	Assemble and Test	9.91		
1.2.3.2.3.5.1.8	Install and Align	9.20		
** *******				
1.2.3.2.3.5.2	Grating Chamber Assembly		490.03	
** ********				
1.2.3.2.3.5.2.1	Bellows	6.29		
1.2.3.2.3.5.2.2	Gratings	123.59		
1.2.3.2.3.5.2.3	Grating Mechanical Assembly	92.77		
1.2.3.2.3.5.2.4	Mask & VBDA	18.31		
1.2.3.2.3.5.2.5	Electrical & Controls	75.53		
1.2.3.2.3.5.2.6	Vacuum System	30.53		
1.2.3.2.3.5.2.7	Support Systems	91.02		
1.2.3.2.3.5.2.8	Assemble & Test	36.05		
1.2.3.2.3.5.2.9	Install & Align	15.93		
** *******				
1.2.3.2.3.5.3	Exit Slit Assembly		167.03	
** ********				
1.2.3.2.3.5.3.1	Bellows	23.22		
1.2.3.2.3.5.3.2	Isolation Valves	22.39		
1.2.3.2.3.5.3.3	Vacuum System	16.73		
1.2.3.2.3.5.3.4	Slit Mechanical Assembly	73.25		
1.2.3.2.3.5.3.5	Support Systems	10.32		
1.2.3.2.3.5.3.6	Assemble & Test	12.78		
1.2.3.2.3.5.3.7	Install & Align	8.33		
** ******				
1.2.3.2.3.8	Branch Line Diagnostics			46.39
** *******				
1.2.3.2.3.8.1	Fab/Buy Mech Parts & Subassy's		11.94	
1.2.3.2.3.8.2	Fab/Buy Electrical & Controls		0.00	
1.2.3.2.3.8.3	Fab/Buy Vacuum Chamber & Supports		12.62	
1.2.3.2.3.8.4	Vacuum Pumping, Gauges, Controllers, P.S.		10.73	
1.2.3.2.3.8.5	Assemble, Bakeout, Test		7.73	
1.2.3.2.3.8.6	Installation		3.36	

Cost Estimate Report
Summary of Material and Labor in FY92K$
by Rollup Levels

Work Breakdown Structure #	Description				Material & Labor Total K$
** ******					
1.2.3.2.3.9	Vacuum System, Controls, & Installation		132.36		
** *******					
1.2.3.2.3.9.1	Fab/Buy Mech Parts & Subassy's	4.95			
1.2.3.2.3.9.2	Fab/Buy Electrical and Controls	79.82			
1.2.3.2.3.9.3	Fab/Buy Vacuum Chamber & Supports	7.54			
1.2.3.2.3.9.4	Vacuum Pumping, Gauges, Controllers, P.S.	0.00			
1.2.3.2.3.9.5	Assemble, Bakeout, Test	16.94			
1.2.3.2.3.9.6	Installation	23.11			
** ******					
1.2.3.2.3.10	Branch Line Safety Systems		12.55		
1.2.3.2.3.11	Circ. Polarizd B.L. Post-Monochromator Optics		134.03		
** *******					
1.2.3.2.3.11.1	Vertical Refocus Mirror	85.54			
1.2.3.2.3.11.2	Diagnostic Systems	21.26			
1.2.3.2.3.11.3	Beam Transport	27.23			
** ***					
1.2.4	Spectroscopy Beamline				5,509.05
** ****					
1.2.4.1	Spectroscopy Beamline EDI			1,199.53	
** *****					
1.2.4.1.1	W16 Wiggler EDI		317.72		
1.2.4.1.2	W16 Front End EDI		93.40		
1.2.4.1.3	W16 Branchline EDI		788.41		
** ****					
1.2.4.2	Circular Polarization Beamline Construction			4,309.52	
** *****					
1.2.4.2.1	W16 Wiggler		1,059.16		
** ******					
1.2.4.2.1.1	Magnetic Structure		546.99		
** *******					
1.2.4.2.1.1.1	Magnetic Material	212.95			

Cost Estimate Report
Summary of Material and Labor in FY92K$
by Rollup Levels

Work Breakdown Structure #	Description				Material & Labor Total K$
1.2.4.2.1.1.2	Model-Pole & Pole Assembly (not req'd)	10.41			
1.2.4.2.1.1.3	Pole Assemblies	98.08			
1.2.4.2.1.1.4	End Pole Assemblies	76.50			
1.2.4.2.1.1.5	Backing Beams	66.76			
1.2.4.2.1.1.6	Magnet Structure Assembly	39.92			
1.2.4.2.1.1.7	Magnetic Measurements: Mechanical	8.04			
1.2.4.2.1.1.8	Magnetic Measurements: Electrical	34.33			
** ******					
1.2.4.2.1.2	Support & Drive Systems		245.04		
** *******					
1.2.4.2.1.2.1	Support System Fabrication	104.10			
1.2.4.2.1.2.2	Drive System Fabrication	119.65			
1.2.4.2.1.2.3	Local Temperature Control Fabrication	21.29			
** ******					
1.2.4.2.1.3	Vacuum System		213.73		
** *******					
1.2.4.2.1.3.1	Vacuum Chamber	140.11			
1.2.4.2.1.3.2	Pumping Systems & Instrumentation	28.19			
1.2.4.2.1.3.3	Support Structure	14.84			
1.2.4.2.1.3.4	Vacuum Diagnostics	30.59			
** ******					
1.2.4.2.1.4	Motor Control System		33.79		
1.2.4.2.1.5	Installation		19.61		
** *****					
1.2.4.2.2	W16 Wiggler Beamline Frontend			622.42	
** ******					
1.2.4.2.2.1	Frontend Mechanical Systems		421.70		
** *******					
1.2.4.2.2.1.1	Fixed Aperture	12.71			
1.2.4.2.2.1.2	PBPM #1	49.04			
1.2.4.2.2.1.3	Front End Photon Shutter	42.60			
1.2.4.2.2.1.4	Fast Valve	23.30			
1.2.4.2.2.1.5	Personnel Safety Shut.	29.26			
1.2.4.2.2.1.6	Front End Vacuum System	57.90			
1.2.4.2.2.1.7	Splitting Mirror System	172.87			
1.2.4.2.2.1.8	Front End Mechanical Installation	34.03			

Cost Estimate Report
Summary of Material and Labor in FY92K$
by Rollup Levels

Work Breakdown Structure #	Description			Material & Labor Total K$
** ******				
1.2.4.2.2.2	Front End Controls: Electronics/Vacuum Pumps		122.86	
** *******				
1.2.4.2.2.2.1	Fixed Aperture Controls	9.37		
1.2.4.2.2.2.2	PBPM #1 Controls	37.54		
1.2.4.2.2.2.3	Photon Shutter Controls	25.88		
1.2.4.2.2.2.4	Fast Valve Controls	23.66		
1.2.4.2.2.2.5	Personnel Safety Shutter Controls	21.69		
1.2.4.2.2.2.6	Vacuum System Controls	4.71		
** ******				
1.2.4.2.2.3	Front End Safety Systems		23.69	
1.2.4.2.2.4	Front End Utilities		27.57	
1.2.4.2.2.5	Front End Mech/Elect System Integration		26.62	
** *****				
1.2.4.2.3	W16 Spectroscopy Branchline			1,260.68
** ******				
1.2.4.2.3.1	Horizontal Beam Defining Aperture (HBDA)		147.27	
** *******				
1.2.4.2.3.1.1	Fab/Buy Machined Parts & Subassy's	23.96		
1.2.4.2.3.1.2	Fab/Buy Electrical and Controls	16.19		
1.2.4.2.3.1.3	Fab/Buy Vacuum Chamber & Supports	19.76		
1.2.4.2.3.1.4	Vacuum Pumping, Gauges, Controllers, P.S.	16.30		
1.2.4.2.3.1.5	Assemble, Bakeout, Test	14.64		
1.2.4.2.3.1.6	Installation	7.41		
1.2.4.2.3.1.7	Beam Diagnostic Device	9.43		
1.2.4.2.3.1.8	Collimating Spool	4.05		
1.2.4.2.3.1.9	Bellows	3.64		
1.2.4.2.3.1.10	Titanium Sublimation Pump	15.70		
1.2.4.2.3.1.11	Isolation Valve	16.20		
** ******				
1.2.4.2.3.2	M1 Spherical Condensing Mirror		185.91	
** *******				
1.2.4.2.3.2.1	Fab/Buy Mech Parts & Subassy's	63.65		
1.2.4.2.3.2.2	Fab/Buy Electrical and Controls	25.28		
1.2.4.2.3.2.3	Fab/Buy Vacuum Chamber & Supports	30.02		

Cost Estimate Report
Summary of Material and Labor in FY92K$
by Rollup Levels

Work Breakdown Structure #	Description			Material & Labor Total K$
1.2.4.2.3.2.4	Vacuum Pumping, Gauges, Controllers, P.S.		15.60	
1.2.4.2.3.2.5	Assemble, Bakeout, Test		15.01	
1.2.4.2.3.2.6	Installation		9.92	
1.2.4.2.3.2.7	Bellows		4.99	
1.2.4.2.3.2.8	Collimating Spool		5.10	
1.2.4.2.3.2.9	Isolation Valve		16.34	
** ******				
1.2.4.2.3.5	Monochromator (LBL-SGM)			748.76
** *******				
1.2.4.2.3.5.1	Entrance Slit Assembly		91.70	
** ********				
1.2.4.2.3.5.1.1	Bellows	6.29		
1.2.4.2.3.5.1.2	Slit Mechanical Assembly	21.34		
1.2.4.2.3.5.1.3	Support Systems	15.69		
1.2.4.2.3.5.1.4	Spools	6.05		
1.2.4.2.3.5.1.5	Vacuum System	12.03		
1.2.4.2.3.5.1.6	Isolation Valve	11.20		
1.2.4.2.3.5.1.7	Assemble and Test	9.91		
1.2.4.2.3.5.1.8	Install and Align	9.20		
** *******				
1.2.4.2.3.5.2	Grating Chamber Assembly		490.03	
** ********				
1.2.4.2.3.5.2.1	Bellows	6.29		
1.2.4.2.3.5.2.2	Gratings	123.59		
1.2.4.2.3.5.2.3	Grating Mechanical Assembly	92.77		
1.2.4.2.3.5.2.4	Mask & VBDA	18.31		
1.2.4.2.3.5.2.5	Electrical & Controls	75.53		
1.2.4.2.3.5.2.6	Vacuum System	30.53		
1.2.4.2.3.5.2.7	Support Systems	91.02		
1.2.4.2.3.5.2.8	Assemble & Test	36.05		
1.2.4.2.3.5.2.9	Install & Align	15.93		
** *******				
1.2.4.2.3.5.3	Exit Slit Assembly		167.03	
** ********				
1.2.4.2.3.5.3.1	Bellows	23.22		
1.2.4.2.3.5.3.2	Isolation Valves	22.39		
1.2.4.2.3.5.3.3	Vacuum System	16.73		
1.2.4.2.3.5.3.4	Slit Mechanical Assembly	73.25		
1.2.4.2.3.5.3.5	Support Systems	10.32		

Cost Estimate Report
Summary of Material and Labor in FY92K$
by Rollup Levels

Work Breakdown Structure #	Description				Material & Labor Total K$
1.2.4.2.3.5.3.6	Assemble & Test	12.78			
1.2.4.2.3.5.3.7	Install & Align	8.33			
** ******					
1.2.4.2.3.8	Branch Line Diagnostics		46.39		
** *******					
1.2.4.2.3.8.1	Fab/Buy Mech Parts & Subassy's	11.94			
1.2.4.2.3.8.2	Fab/Buy Electrical & Controls	0.00			
1.2.4.2.3.8.3	Fab/Buy Vacuum Chamber & Supports	12.62			
1.2.4.2.3.8.4	Vacuum Pumping, Gauges, Controllers, P.S.	10.73			
1.2.4.2.3.8.5	Assemble, Bakeout, Test	7.73			
1.2.4.2.3.8.6	Installation	3.36			
** ******					
1.2.4.2.3.9	Vacuum System, Controls, & Installation		119.81		
** *******					
1.2.4.2.3.9.1	Fab/Buy Mech Parts & Subassy's	4.95			
1.2.4.2.3.9.2	Fab/Buy Electrical and Controls	67.27			
1.2.4.2.3.9.3	Fab/Buy Vacuum Chamber & Supports	7.54			
1.2.4.2.3.9.5	Assemble, Bakeout, Test	16.94			
1.2.4.2.3.9.6	Installation	23.11			
** ******					
1.2.4.2.3.10	Branch Line Safety Systems		12.55		
** *****					
1.2.4.2.4	W16 Crystallography Branchline			1,367.26	
** ******					
1.2.4.2.4.1	Branch Line Mechanical Systems		930.37		
** *******					
1.2.4.2.4.1.1	H&V Beam Defining Apertures	86.36			
1.2.4.2.4.1.2	Vertical Deflection Mirrors	252.43			
1.2.4.2.4.1.3	Monochromator	365.00			
1.2.4.2.4.1.4	Beam Line Diagnostics	40.12			
1.2.4.2.4.1.5	Branch Line Vacuum System	67.90			
1.2.4.2.4.1.6	Branch Line Mechanical Installation	28.58			
1.2.4.2.4.1.7	Defining Slits	90.00			
** ******					
1.2.4.2.4.2	Branch Line Electrical Systems		190.92		

Cost Estimate Report
Summary of Material and Labor in FY92K$
by Rollup Levels

Work Breakdown Structure #	Description				Material & Labor Total K$
** *******					
1.2.4.2.4.2.1	Photon Transport Controls & Diagnostics	120.11			
1.2.4.2.4.2.2	Monochromator Controls	54.96			
1.2.4.2.4.2.3	Branch Line Electrical Installation	15.84			
** ******					
1.2.4.2.4.3	Branch Line Safety Systems		10.38		
1.2.4.2.4.4	Branch Line Utilities		25.57		
1.2.4.2.4.5	Branch Line Mech/Elect System Integration		24.12		
1.2.4.2.4.6	Branchline Mirror Box Systems		185.91		
** *******					
1.2.4.2.4.6.1	Fab/Buy Mech Parts & Subassy's	63.65			
1.2.4.2.4.6.2	Fab/Buy Electrical and Controls	25.28			
1.2.4.2.4.6.3	Fab/Buy Vacuum Chamber & Supports	30.02			
1.2.4.2.4.6.4	Vacuum Pumping, Gauges, Controllers, P.S.	15.60			
1.2.4.2.4.6.5	Assemble, Bakeout, Test	15.01			
1.2.4.2.4.6.6	Installation	9.92			
1.2.4.2.4.6.7	Bellows	4.99			
1.2.4.2.4.6.8	Collimating Spool	5.10			
1.2.4.2.4.6.9	Isolation Valve	16.34			
** ***					
1.2.5	Soft X-ray Microscopy Beamline				4,186.85
** ****					
1.2.5.1	U3.65 Beamline EDI			897.94	
** *****					
1.2.5.1.1	U3.65 Undulator EDI		331.18		
1.2.5.1.2	U3.65 Front End EDI		88.10		
1.2.5.1.3	U3.65 Branchline EDI		478.66		
** ****					
1.2.5.2	Soft X-ray Microscopy Beamline Construction			3,288.91	
** *****					
1.2.5.2.1	Undulator (U3.65)		1,104.26		
** ******					
1.2.5.2.1.1	Magnetic Structure		631.07		

Cost Estimate Report
Summary of Material and Labor in FY92K$
by Rollup Levels

Work Breakdown Structure #	Description			Material & Labor Total K$
** *******				
1.2.5.2.1.1.1	Magnetic Material	198.61		
1.2.5.2.1.1.2	Model Pole & Pole Assembly	4.25		
1.2.5.2.1.1.3	Pole Assemblies	295.57		
1.2.5.2.1.1.4	End Pole Assemblies	36.85		
1.2.5.2.1.1.5	Backing Beams	41.41		
1.2.5.2.1.1.6	Magnet Structure Assembly	35.12		
1.2.5.2.1.1.7	Magnetic Measurement: Mechanical	6.67		
1.2.5.2.1.1.8	Magnetic Measurements: Electrical	12.59		
** ******				
1.2.5.2.1.2	Support & Drive Systems		166.76	
** *******				
1.2.5.2.1.2.1	Support System Fabrication	54.63		
1.2.5.2.1.2.2	Drive System Fabrication	104.14		
1.2.5.2.1.2.3	Local Temperature Control	8.00		
** ******				
1.2.5.2.1.3	Vacuum System		187.45	
** *******				
1.2.5.2.1.3.1	Vacuum Chambers	105.40		
1.2.5.2.1.3.2	Pumping Systems & Instrumentation	36.95		
1.2.5.2.1.3.3	Support Structure	14.68		
1.2.5.2.1.3.4	Vacuum Diagnostics	30.42		
** ******				
1.2.5.2.1.4	Control System		26.54	
1.2.5.2.1.5	Magnetic Measurement		61.83	
** *******				
1.2.5.2.1.5.1	Magnetic Measurements: Mechanical	23.18		
1.2.5.2.1.5.2	Magnetic Measurements: Electrical	38.65		
** ******				
1.2.5.2.1.6	Installation		30.62	
** *****				
1.2.5.2.2	U3.65 Front End			587.37
** ******				
1.2.5.2.2.1	Fixed Aperture		57.72	
** *******				
1.2.5.2.2.1.1	Aperture Plate	4.36		

Cost Estimate Report
Summary of Material and Labor in FY92K$
by Rollup Levels

Work Breakdown Structure #	Description		Material & Labor Total K$
1.2.5.2.2.1.2	Bellows	3.16	
1.2.5.2.2.1.3	Collimating Spool	4.35	
1.2.5.2.2.1.4	Isolation Valve	24.16	
1.2.5.2.2.1.5	Support Stand	10.24	
1.2.5.2.2.1.6	Assemble, Bakeout, Test	4.34	
1.2.5.2.2.1.7	Installation	7.10	
** ******			
1.2.5.2.2.2	Photon BPM #1		74.26
** *******			
1.2.5.2.2.2.1	Fab/Buy Mech Parts & Subassy's	14.35	
1.2.5.2.2.2.2	Fab/Buy Electrical and Controls	26.89	
1.2.5.2.2.2.3	Fab/Buy Support Stand	6.31	
1.2.5.2.2.2.4	Bellows	8.84	
1.2.5.2.2.2.5	Assemble, Bakeout, Test (Assembly Shop)	8.56	
1.2.5.2.2.2.6	Installation	9.30	
** ******			
1.2.5.2.2.3	Photon Shutter		120.36
** *******			
1.2.5.2.2.3.1	Fab/Buy Mech Parts & Subassy's	23.96	
1.2.5.2.2.3.2	Fab/Buy Electrical and Controls	8.54	
1.2.5.2.2.3.3	Fab/Buy Vacuum Chamber & Supports	19.76	
1.2.5.2.2.3.4	Vacuum Pumping, Gauges, Controllers, P.S.	16.54	
1.2.5.2.2.3.5	Assemble, Bakeout, Test	14.79	
1.2.5.2.2.3.6	Installation	8.86	
1.2.5.2.2.3.7	Titanium Sublimation Pump	8.72	
1.2.5.2.2.3.8	Isolation Valve	19.20	
** ******			
1.2.5.2.2.4	Fast Valve		43.35
** *******			
1.2.5.2.2.4.1	Fast Valve	26.00	
1.2.5.2.2.4.2	Fab/Buy Electrical and Controls	2.89	
1.2.5.2.2.4.3	Bellows	3.64	
1.2.5.2.2.4.4	Aperture Plate	4.36	
1.2.5.2.2.4.5	Assemble, Bakeout, Test	3.95	
1.2.5.2.2.4.6	Installation	2.51	
** ******			
1.2.5.2.2.5	Personnel Safety Shutter		104.40

Cost Estimate Report
Summary of Material and Labor in FY92K$
by Rollup Levels

Work Breakdown Structure #	Description			Material & Labor Total K$
** *******				
1.2.5.2.2.5.1	Fab/Buy Mech Parts & Subassy's	21.32		
1.2.5.2.2.5.2	Fab/Buy Electrical and Controls	4.68		
1.2.5.2.2.5.3	Fab/Buy Vacuum Chamber & Supports	16.34		
1.2.5.2.2.5.4	Vacuum Pumping, Gauges, Controllers, P.S.	15.87		
1.2.5.2.2.5.5	Assemble, Bakeout, Test	14.23		
1.2.5.2.2.5.6	Installation	6.36		
1.2.5.2.2.5.7	Shield Wall Transition Spool	9.42		
1.2.5.2.2.5.8	Isolation Valve	16.20		
** ******				
1.2.5.2.2.6	Photon BPM #2		79.56	
** *******				
1.2.5.2.2.6.1	Fab/Buy Mech Parts & Subassy's	16.06		
1.2.5.2.2.6.2	Fab/Buy Electrical and Controls	30.55		
1.2.5.2.2.6.3	Fab/Buy Support Stand	6.31		
1.2.5.2.2.6.4	Bellows	8.84		
1.2.5.2.2.6.5	Assemble, Bakeout, Test	8.56		
1.2.5.2.2.6.6	Installation	9.24		
** ******				
1.2.5.2.2.7	Vacuum System, Utilities & Installation		85.14	
** *******				
1.2.5.2.2.7.1	Fab/Buy Mech Parts & Subassy's	7.89		
1.2.5.2.2.7.2	Fab/Buy Electical and Controls	19.09		
1.2.5.2.2.7.3	Fab/Buy Vacuum Chamber & Supports	6.82		
1.2.5.2.2.7.4	Vacuum Pumping, Gauges, Controllers, P.S.	14.25		
1.2.5.2.2.7.5	Assemble, Bakeout, Test	11.20		
1.2.5.2.2.7.6	Installation	25.89		
** ******				
1.2.5.2.2.8	Safety Systems		22.57	
** *****				
1.2.5.2.3	U3.65 Branchline			1,597.28
** ******				
1.2.5.2.3.1	Branch Line Mechanical Systems		700.77	
** *******				
1.2.5.2.3.1.1	Beam Defining Apertures	86.36		
1.2.5.2.3.1.2	Monochromator	476.83		

Cost Estimate Report
Summary of Material and Labor in FY92K$
by Rollup Levels

Work Breakdown Structure #	Description			Material & Labor Total K$	
1.2.5.2.3.1.3	Branch Line Diagnostics	40.12			
1.2.5.2.3.1.4	Branch Line Vacuum System	67.90			
1.2.5.2.3.1.5	Branch Line Mechanical Installation	29.57			
** ******					
1.2.5.2.3.2	Branch Line Electrical Systems		269.49		
** *******					
1.2.5.2.3.2.1	Photon Transport Controls & Diagnosticss	198.69			
1.2.5.2.3.2.2	Monochromator Controls	54.96			
1.2.5.2.3.2.3	Branch Line Electrical Installation	15.84			
** ******					
1.2.5.2.3.3	Branch Line Safety Systems		10.38		
1.2.5.2.3.4	Branch Line Utilities		25.57		
1.2.5.2.3.5	Branch Line Mech/Elect System Integration		24.12		
1.2.5.2.3.6	Scanning Microscope Station		566.95		
** **					
1.3	Conventional Facilities				4,280.26
** ***					
1.3.1	Conventional Facilities EDI			543.85	
** ****					
1.3.1.1	Conventional Facilities EDI:LBL			168.85	
1.3.1.2	Conventional Facilities EDI:A/E			375.00	
** ***					
1.3.2	Office/Light Lab Construction			2,515.56	
1.3.3	Special Building Facilities			452.40	
1.3.4	Electrical Switchgear/Utilities			657.72	
1.3.5	Standard Equipment			110.73	
** **					
1.4	Contingency				7,578.50
** ***					
1.4.1	Project Management			436.50	
1.4.2	Beamline Systems			6,392.00	
1.4.3	Conventional Facilities			750.00	

Page No. 1
01/31/94

Technical Components Cost Estimate

ITM NBR	ITM DESCRIPTION	UNIT MEAS	NBR UNITS	UNIT COST COST BASIS	TOTAL ISC K$	LBR UNTS	HRS/ UNIT	TOTAL HRS	CRAFT CODE	CRAFT RATE	TOTAL LABOR K$	ISC + LABOR K$
** WBS: 1.1.1	Project Direction and Management											
1	Project Manager		0	0.00	0.0	1	5450.0	5450	ME	59.40	323.7	323.7
2	Deputy Project Manager		0	0.00	0.0	1	5450.0	5450	EE	59.40	323.7	323.7
3	Safety Officer		0	0.00	0.0	1	2725.0	2725	AA	42.75	116.5	116.5
4	Conventionl Facilits Mgr		0	0.00	0.0	1	5450.0	5450	PEN	44.95	245.0	245.0
5	QA Officer		0	0.00	0.0	1	2725.0	2725	ME	59.40	161.9	161.9
7	Supplies & Expenses		1	234171.00 eu	234.2	0	0.0	0		0.00	0.0	234.2
** Subtotal **					234.2			21800			1170.8	1405.0
** WBS: 1.1.2	Project Office Services											
1	Clerical Support		0	0.00	0.0	1	6810.0	6810	AA	42.75	291.1	291.1
2	Budget & C/SCS Support		0	0.00	0.0	1	5450.0	5450	AA	42.75	233.0	233.0
3	Supplies & Expenses	lot	1	75000.00 eu	75.0	0	0.0	0		0.00	0.0	75.0
** Subtotal **					75.0			12260			524.1	599.1
** WBS: 1.2.1.1.1	U8 Undulator EDI											
1	Engineering		0	0.00	0.0	1	3100.0	3100	ME	59.40	184.1	184.1
2	Design		0	0.00	0.0	1	3100.0	3100	MD	42.25	131.0	131.0
3	S&E	lot	1	18085.00 eu	18.1	0	0.0	0		0.00	0.0	18.1
** Subtotal **					18.1			6200			315.1	333.2
** WBS: 1.2.1.1.2	U8 Front End EDI											
1	Design		0	0.00	0.0	1	2000.0	2000	MD	42.25	84.5	84.5
2	S&E	lot	1	3600.00 eu	3.6	0	0.0	0		0.00	0.0	3.6
** Subtotal **					3.6			2000			84.5	88.1
* WBS: 1.2.1.1.3	U8 Branchline EDI											
1	Engineering		0	0.00	0.0	1	2400.0	2400	ME	59.40	142.6	142.6
2	Design		0	0.00	0.0	1	7200.0	7200	MD	42.25	304.2	304.2
3	S&E	lot	1	32000.00 eu	32.0	0	0.0	0		0.00	0.0	32.0
** Subtotal **					32.0			9600			446.8	478.8
** WBS: 1.2.1.1.4	Bend Magnet Front End EDI											
1	Design		0	0.00	0.0	1	1200.0	1200	MD	42.25	50.7	50.7
2	S&E	lot	1	4500.00 eu	4.5	0	0.0	0		0.00	0.0	4.5
** Subtotal **					4.5			1200			50.7	55.2
** WBS: 1.2.1.1.5	Bend Magnet Branchline EDI											
1	Engineering		0	0.00	0.0	1	3000.0	3000	ME	59.40	178.2	178.2
2	Design		0	0.00	0.0	1	9000.0	9000	MD	42.25	380.2	380.2
3	S&E	lot	1	34180.00 eu	34.2	0	0.0	0		0.00	0.0	34.2
** Subtotal **					34.2			12000			558.5	592.6
** WBS: 1.2.1.2.1.1.1	Magnetic Material											
1	NDFE Blocks	ea	1480	68.80 A90	101.8	0	0.0	0		0.00	0.0	101.8
2	Measurement Prep		0	0.00	0.0	1	20.0	20	EM	33.00	0.7	0.7
3			0	0.00	0.0	1	20.0	20	EE	59.40	1.2	1.2
4	Measurements	LOT	1	500.00 EU	0.5	0	0.0	0		0.00	0.0	0.5
5	3-Axis H.C. Meas		0	0.00	0.0	1480	0.1	222	EM	33.00	7.3	7.3
6	Supervision		0	0.00	0.0	1	100.0	100	EE	59.40	5.9	5.9
** Subtotal **					102.3			362			15.1	117.4
** WBS: 1.2.1.2.1.1.3	Pole Assemblies											
1	Vanadium Permendur	ea	246	81.71 A91	20.1	0	0.0	0		0.00	0.0	20.1
2	Keepers	ea	246	205.00 A91	50.4	1	80.0	80	MM	38.60	3.1	53.5
3	Keeper Inspection	lot	1	300.00 EU	0.3	246	0.8	197	MM	38.60	7.6	7.9
4	Assy Fixtures		0	0.00	0.0	1	40.0	40	MM	38.60	1.5	1.5
5	Assembly	ea	246	10.50 A91	2.6	246	6.0	1476	MM	38.60	57.0	59.6

Technical Components Cost Estimate

ITM NBR	ITM DESCRIPTION	UNIT MEAS	NBR UNITS	UNIT COST	COST BASIS	TOTAL ISC K$	LBR UNTS	HRS/ UNIT	TOTAL HRS	CRAFT CODE	CRAFT RATE	TOTAL LABOR K$	ISC LABOR K$
6	Pole Assembly Mounts	ea	10	1914.00	A91	19.1	10	12.0	120	MM	38.60	4.6	23.8
** Subtotal **						92.6			1913			73.8	166.4
** WBS: 1.2.1.2.1.1.4	End Pole Assemblies												
1	End Pole Keepers	LOT	1	12157.00	A91	12.2	0	0.0	0		0.00	0.0	12.2
2	NdFe Block Cutting		0	0.00		0.0	24	4.0	96	MS	37.73	3.6	3.6
3	Assembly - Keepers		0	0.00		0.0	8	48.0	384	MA	38.60	14.8	14.8
4	Rotator		0	0.00		0.0	8	40.0	320	MM	38.60	12.4	12.4
5	Rotator Block Cutting		0	0.00		0.0	24	4.0	96	MS	37.73	3.6	3.6
6	Assemble - Rotator		0	0.00		0.0	8	16.0	128	MA	38.60	4.9	4.9
7	Rotator Linkage	ea	8	105.00	EU	0.8	8	8.0	64	MM	38.60	2.5	3.3
8	Manual Rotatr Drv	ea	8	525.00	CP	4.2	8	16.0	128	MM	38.60	4.9	9.1
9			0	0.00		0.0	8	12.0	96	MA	38.60	3.7	3.7
10	End pole mounts/levelers	lot	1	7595.00	A91	7.6	4	8.0	32	MM	38.60	1.2	8.8
** Subtotal **						24.8			1344			51.7	76.5
** WBS: 1.2.1.2.1.1.5	Backing Beams												
1	Backing Beams (2)	lot	1	74900.00	A91	74.9	1	50.0	50	MM	38.60	1.9	76.8
2	Flux Shunt	ea	1	6500.00	eu	6.5	1	206.0	206	MA	38.60	8.0	14.5
3	Rigging Hardware	lot	1	500.00	EU	0.5	0	0.0	0		0.00	0.0	0.5
4	Misc.	lot	1	1000.00	eu	1.0	1	80.0	80	MA	38.60	3.1	4.1
5	Z spacers	lot	1	100.00	eu	0.1	1	100.0	100	MM	38.60	3.9	4.0
6	Adjusters/guides	lot	1	9257.00	A91	9.3	1	40.0	40	MA	38.60	1.5	10.8
7	Magnetic Shields	lot	1	200.00	eu	0.2	1	64.0	64	MA	38.60	2.5	2.7
** Subtotal **						92.5			540			20.8	113.3
** WBS: 1.2.1.2.1.1.6	Magnet Structure Assembly												
1	Keeper Pole Mount Assembl	ea	10	235.00	A91	2.4	10	60.0	600	MA	38.60	23.2	25.5
2	End Pole Assembly		0	0.00		0.0	4	60.0	240	MM	38.60	9.3	9.3
3	Pole Mount/Bckg Bm Assy	ea	10	105.00	EU	1.1	10	32.0	320	MA	38.60	12.4	13.4
4	Fiducializing	lot	1	105.00	EU	0.1	2	40.0	80	MA	38.60	3.1	3.2
5	Miscellaneous	lot	1	1000.00	eu	1.0	1	80.0	80	MM	38.60	3.1	4.1
** Subtotal **						4.5			1320			51.0	55.5
** WBS: 1.2.1.2.1.1.7	Magnetic Measurements: Mechanical												
1	Assembly Section Setup		0	0.00		0.0	10	4.0	40	MA	38.60	1.5	1.5
2	ID Setup	lot	1	315.00	eu	0.3	1	160.0	160	MA	38.60	6.2	6.5
** Subtotal **						0.3			200			7.7	8.0
** WBS: 1.2.1.2.1.1.8	Magnetic Measurements: Electrical												
1	Setup Assembly Sections		0	0.00		0.0	1	16.0	16	EE	59.40	1.0	1.0
2			0	0.00		0.0	10	4.0	40	ES	33.00	1.3	1.3
3	Data Acquire: Assy Sectns		0	0.00		0.0	10	3.0	30	EE	59.40	1.8	1.8
4			0	0.00		0.0	10	4.0	40	ES	33.00	1.3	1.3
5	Data Analysis:Assy Sectns		0	0.00		0.0	1	80.0	80	EE	59.40	4.8	4.8
6	Code Software Coil Paramt		0	0.00		0.0	1	8.0	8	CP	59.40	0.5	0.5
7			0	0.00		0.0	1	8.0	8	EE	59.40	0.5	0.5
8	ID Setup: Electronic		0	0.00		0.0	1	16.0	16	EE	59.40	1.0	1.0
9			0	0.00		0.0	1	40.0	40	ES	33.00	1.3	1.3
10	ID Setup: Electrical		0	0.00		0.0	1	40.0	40	ES	33.00	1.3	1.3
11	ID: Data Acquisition		0	0.00		0.0	1	40.0	40	EE	59.40	2.4	2.4
12			0	0.00		0.0	1	240.0	240	ES	33.00	7.9	7.9
13	ID: Data Analysis		0	0.00		0.0	1	40.0	40	EE	59.40	2.4	2.4
14	Data Preparation		0	0.00		0.0	1	80.0	80	ES	33.00	2.6	2.6
15	Q/C Verification		0	0.00		0.0	1	20.0	20	EE	59.40	1.2	1.2
16			0	0.00		0.0	1	20.0	20	ES	33.00	0.7	0.7
17	Shutdown/Storage		0	0.00		0.0	1	20.0	20	EE	59.40	1.2	1.2
18			0	0.00		0.0	1	40.0	40	ES	33.00	1.3	1.3
** Subtotal **						0.0			818			34.3	34.3

Page No. 3
01/31/94

Technical Components Cost Estimate

ITM NBR	ITM DESCRIPTION	UNIT MEAS	NBR UNITS	UNIT COST	COST BASIS	TOTAL ISC K$	LBR UNTS	HRS/ UNIT	TOTAL HRS	CRAFT CODE	CRAFT RATE	TOTAL LABOR K$	ISC + LABOR K$
** WBS: 1.2.1.2.1.2.1	Support System Fabrication												
1	Support System Assembly	ea	1	55200.00	EU	55.2	1	20.0	20	MA	38.60	0.8	56.0
2	Associated Parts	lot	1	1000.00	EU	1.0	1	80.0	80	MM	38.60	3.1	4.1
3	Miscellaneous	lot	1	1900.00	EU	1.9	1	210.0	210	MM	38.60	8.1	10.0
4	Assembly	lot	1	1800.00	EU	1.8	1	835.0	835	MA	38.60	32.2	34.0
** Subtotal **						59.9			1145			44.2	104.1
** WBS: 1.2.1.2.1.2.2	Drive System Fabrication												
1	Roller Screw Assembly	ea	1	53200.00	A91	53.2	1	32.0	32	MM	38.60	1.2	54.4
2	Spring System	ea	1	1000.00	eu	1.0	1	130.0	130	MM	38.60	5.0	6.0
3	Bearing System	lot	1	900.00	EU	0.9	1	105.0	105	MM	38.60	4.1	5.0
4	Sprocket/Chain System	lot	1	700.00	eu	0.7	1	50.0	50	MM	38.60	1.9	2.6
5	Gear Box & Mtg.	ea	1	1700.00	EU	1.7	1	20.0	20	MM	38.60	0.8	2.5
6	Encoder System	lot	1	500.00	eu	0.5	1	50.0	50	MM	38.60	1.9	2.4
7	Motor Mounting Bracket	ea	1	400.00	eu	0.4	1	40.0	40	MM	38.60	1.5	1.9
8	Fan System	lot	1	200.00	eu	0.2	1	40.0	40	MM	38.60	1.5	1.7
9	Miscellaneous	lot	1	1200.00	EU	1.2	1	235.0	235	MM	38.60	9.1	10.3
10	Assembly	lot	1	900.00	EU	0.9	1	365.0	365	MA	38.60	14.1	15.0
11	Roller Screw Kinematc Mnt	ea	8	1400.00	eu	11.2	1	170.0	170	MM	38.60	6.6	17.8
** Subtotal **						71.9			1237			47.7	119.6
** WBS: 1.2.1.2.1.2.3	Local Temperature Control Fabrication												
1	Frame & Curtain	lot	1	3000.00	EU	3.0	1	200.0	200	MA	38.60	7.7	10.7
2	Blower & Dryer System	lot	1	1100.00	EU	1.1	1	80.0	80	MA	38.60	3.1	4.2
3	Miscellaneous	lot	1	2000.00	EU	2.0	1	40.0	40	MA	38.60	1.5	3.5
4	Electrical Installation	ea	1	200.00	eu	0.2	1	80.0	80	EI	33.00	2.6	2.8
** Subtotal **						6.3			400			15.0	21.3
** WBS: 1.2.1.2.1.3.1	Vacuum Chamber												
1	Vacuum Chamber (1 cm)		0	0.00		0.0	0	0.0	0		0.00	0.0	0.0
2	Material	lbs	2275	2.32	VQ	5.3	0	0.0	0		0.00	0.0	5.3
3	Fabrication	ea	1	58810.00	A91	58.8	0	0.0	0		0.00	0.0	58.8
4		ea	1	55260.00	A91	55.3	0	0.0	0		0.00	0.0	55.3
5	Fabricate Flanges	lot	1	2620.00	A91	2.6	1	120.0	120	MM	38.60	4.6	7.3
6	Fab Flange Transitions	lot	1	1144.00	A91	1.1	6	30.0	180	MM	38.60	6.9	8.1
7	Assemble/Test		0	0.00		0.0	1	320.0	320	MA	38.60	12.4	12.4
8	System Assembly		0	0.00		0.0	1	80.0	80	MA	38.60	3.1	3.1
9	UHV Bakeout		0	0.00		0.0	1	160.0	160	MA	38.60	6.2	6.2
10	Trial Installation		0	0.00		0.0	1	80.0	80	MA	38.60	3.1	3.1
11	Final Installation		0	0.00		0.0	1	120.0	120	MA	38.60	4.6	4.6
12	Vacuum Chamber Inspection		0	0.00		0.0	1	80.0	80	MM	38.60	3.1	3.1
** Subtotal **						123.1			1140			44.0	167.1
** WBS: 1.2.1.2.1.3.2	Pumping Systems & Instrumentation												
1	Ion Pump/TSP Combination	ea	3	4200.00	CP	12.6	0	0.0	0		0.00	0.0	12.6
2	90 deg Elbow to Pump	ea	3	610.00	CP	1.8	0	0.0	0		0.00	0.0	1.8
3	Right Angle Valve	ea	2	880.00	CP	1.8	0	0.0	0		0.00	0.0	1.8
4	Aluminum Conflats	ea	5	95.00	CP	0.5	0	0.0	0		0.00	0.0	0.5
5	NEG Electrical Feedthru	ea	2	200.00	eu	0.4	0	0.0	0		0.00	0.0	0.4
6	NEG Strip	ea	2	1340.00	CP	2.7	0	0.0	0		0.00	0.0	2.7
7	NEG Strip Mountng Hardwre	ea	2	312.00	eu	0.6	2	60.0	120	MM	38.60	4.6	5.3
8	NEG Strip Assembly	ea	1	104.00	eu	0.1	2	40.0	80	MA	38.60	3.1	3.2
** Subtotal **						20.5			200			7.7	28.2
** WBS: 1.2.1.2.1.3.3	Support Structure												
1	Vacuum Chamber Support	lot	1	2100.00	EU	2.1	1	160.0	160	MM	38.60	6.2	8.3
2	Ion Pump Supports	ea	3	210.00	EU	0.6	3	20.0	60	MM	38.60	2.3	2.9
3	Installation Fixture	ea	1	525.00	EU	0.5	1	80.0	80	MM	38.60	3.1	3.6
** Subtotal **						3.3			300			11.6	14.8

Page No. 4
01/31/94

Technical Components Cost Estimate

ITM NBR	ITM DESCRIPTION	UNIT MEAS	NBR UNITS	UNIT COST COST	BASIS	TOTAL ISC K$	LBR UNTS	HRS/ UNIT	TOTAL HRS	CRAFT CODE	CRAFT RATE	TOTAL LABOR K$	ISC + LABOR K$
** WBS: 1.2.1.2.1.3.4	Vacuum Diagnostics												
1	IG Controller	eaa	1	895.00	CP	0.9	1	2.0	2	ES	33.00	0.1	1.0
2	Degas Module	ea	1	157.50	CP	0.2	0	0.0	0		0.00	0.0	0.2
3	Second IG Module	ea	1	78.75	CP	0.1	0	0.0	0		0.00	0.0	0.1
4	Process Control Module	ea	1	367.50	CP	0.4	0	0.0	0		0.00	0.0	0.4
5	Rack Mount	ea	1	52.50	CP	0.1	1	1.0	1	ES	33.00	0.0	0.1
6	Remote I/O Module	ea	1	85.00	CP	0.1	0	0.0	0		0.00	0.0	0.1
7	Dual Convectron Module	ea	1	420.00	CP	0.4	0	0.0	0		0.00	0.0	0.4
8	UHV Electrometer Module	ea	1	420.00	CP	0.4	0	0.0	0		0.00	0.0	0.4
9	IEEE-488 Interface	ea	1	378.00	CP	0.4	0	0.0	0		0.00	0.0	0.4
10	Nude Ion Gauge	ea	1	326.55	CP	0.3	1	1.0	1	MS	37.73	0.0	0.4
11	IG Cable: 50 feet	ea	1	204.75	CP	0.2	1	1.0	1	ES	33.00	0.0	0.2
12	Convectron Gauge	ea	1	145.95	CP	0.1	1	1.0	1	MS	37.73	0.0	0.2
13	Convectron Cable: 50 feet	ea	1	220.50	CP	0.2	1	1.0	1	ES	33.00	0.0	0.3
14	IG Connector	ea	1	10.50	EU	0.0	1	1.0	1	MS	37.73	0.0	0.0
15	IG Cable Interface	ea	1	52.50	EU	0.1	1	4.0	4	ES	33.00	0.1	0.2
16	Ion Pump Controller	ea	3	2045.40	CP	6.1	3	2.0	6	ES	33.00	0.2	6.3
17	Ion Pump Cable	ea	3	234.15	CP	0.7	3	4.0	12	ES	33.00	0.4	1.1
18	Ion Pump Cable Interface	ea	3	105.00	EU	0.3	3	4.0	12	ES	33.00	0.4	0.7
19	IEEE-488 Interface	ea	3	522.90	CP	1.6	0	0.0	0		0.00	0.0	1.6
20	ILC Crate	ea	1	1000.00	EU	1.0	1	40.0	40	ES	33.00	1.3	2.3
21	ILC	ea	2	1100.00	EU	2.2	1	40.0	40	ES	33.00	1.3	3.5
22	Sublimation Controller	ea	1	2100.00	CP	2.1	1	4.0	4	ES	33.00	0.1	2.2
23	Sublimation Mux	ea	1	2100.00	EU	2.1	1	80.0	80	ES	33.00	2.6	4.7
24	Filament Cables	set	1	525.00	EU	0.5	1	40.0	40	ES	33.00	1.3	1.8
25	NEG Power Supply	ea	1	2000.00	eu	2.0	0	0.0	0		0.00	0.0	2.0
** Subtotal **						22.5			246			8.1	30.6
** WBS: 1.2.1.2.1.4	Motor Control System												
1	Controller 500 Indexer	ea	1	1515.00	CP	1.5	0	0.0	0		0.00	0.0	1.5
2	Motor Package PK130M-T	ea	1	4703.00	CP	4.7	0	0.0	0		0.00	0.0	4.7
3	Absolute Encoder	ea	1	1805.00	CP	1.8	0	0.0	0		0.00	0.0	1.8
4	100 Ft cables	set	1	1000.00	CP	1.0	0	0.0	0		0.00	0.0	1.0
5	ILC	ea	1	1100.00	eu	1.1	0	0.0	0		0.00	0.0	1.1
6	ILC Crate (holds 6 ILCs)	ea	1	1000.00	eu	1.0	0	0.0	0		0.00	0.0	1.0
7	Final Installation	lot	1	4000.00	eu	4.0	1	180.0	180	EI	33.00	5.9	9.9
8	Indexer/Cont.	lot	1	2000.00	eu	2.0	1	60.0	60	IEL	62.85	3.8	5.8
9	Shop Installation	lot	1	3000.00	eu	3.0	1	120.0	120	EI	33.00	4.0	7.0
** Subtotal **						20.1			360			13.7	33.8
** WBS: 1.2.1.2.1.5	Installation												
1	Prepare & Truck to Site	lot	1	525.00	eu	0.5	1	80.0	80	MA	38.60	3.1	3.6
2	Rigger's Work	lot	1	1200.00	eu	1.2	1	64.0	64	RG	37.65	2.4	3.6
3	Survey & Alignment		0	0.00		0.0	1	80.0	80	MA	38.60	3.1	3.1
4	Installation	lot	1	315.00	eu	0.3	1	100.0	100	MA	38.60	3.9	4.2
5	Vacuum Hookup/Pumpdown	lot	1	105.00	eu	0.1	1	40.0	40	MA	38.60	1.5	1.6
6	Reinstall Temp Ctrl Housg		0	0.00		0.0	1	40.0	40	MA	38.60	1.5	1.5
7	Miscellaneous		0	0.00		0.0	1	50.0	50	MA	38.60	1.9	1.9
** Subtotal **						2.1			454			17.5	19.6
** WBS: 1.2.1.2.2.1.1	Aperture Plate												
1	Water Cooled Absorber	ea	1	800.00	A91	0.8	1	40.0	40	MS	37.73	1.5	2.3
2	Brazing Fixtures/Tooling	LOT	1	200.00	EU	0.2	1	30.0	30	MU	35.92	1.1	1.3
3	Flange Gaskets & Hardware	lot	2	200.00	eu	0.4	1	10.0	10	MS	37.73	0.4	0.8
** Subtotal **						1.4			80			3.0	4.4
** WBS: 1.2.1.2.2.1.2	Bellows												
1	Welded Bellows Assy	ea	1	3000.00	A91	3.0	1	1.0	1	MS	37.73	0.0	3.0
2	Inspect,Clean,Bake	ea	1	50.00	eu	0.1	1	2.0	2	MU	35.92	0.1	0.1
** Subtotal **						3.0			3			0.1	3.2

Technical Components Cost Estimate

ITM NBR	ITM DESCRIPTION	UNIT MEAS	NBR UNITS	UNIT COST	COST BASIS	TOTAL ISC K$	LBR UNTS	HRS/ UNIT	TOTAL HRS	CRAFT CODE	CRAFT RATE	TOTAL LABOR K$	ISC + LABOR K$
** WBS: 1.2.1.2.2.1.3	Collimating Spool												
1	Spool Piece	ea	1	1250.00	A91	1.2	1	8.0	8	MU	35.92	0.3	1.5
2	Misc. Flanges/UHV Hardwre	lot	1	500.00	eu	0.5	1	8.0	8	MS	37.73	0.3	0.8
3	Lead Shielding & Mounting	lot	1	500.00	eu	0.5	1	40.0	40	MS	37.73	1.5	2.0
** Subtotal **						2.2			56			2.1	4.3
** WBS: 1.2.1.2.2.1.4	Isolation Valve												
1	Valve & Controller Proc.	ea	1	22140.00	A91	22.1	0	0.0	0		0.00	0.0	22.1
2	Prelim Assemble & Test	lot	1	50.00	ea	0.1	1	8.0	8	MU	35.92	0.3	0.3
3	Inspect/Clean/Etc.	lot	1	50.00	eu	0.1	1	4.0	4	MU	35.92	0.1	0.2
4	Cables & connectors	lot	1	200.00	eu	0.2	1	4.0	4	EI	33.00	0.1	0.3
5	Blank flngs & mntng hrdwr	lot	2	200.00	eu	0.4	1	20.0	20	MS	37.73	0.8	1.2
** Subtotal **						22.8			36			1.3	24.2
** WBS: 1.2.1.2.2.1.5	Support Stand												
1	Support stand, misc. hrdw	ea	1	1500.00	eu	1.5	1	40.0	40	MS	37.73	1.5	3.0
2	Struts & hardware	ea	6	500.00	A91	3.0	6	8.0	48	MU	35.92	1.7	4.7
3	Misc.	lot	1	1000.00	eu	1.0	1	40.0	40	MS	37.73	1.5	2.5
** Subtotal **						5.5			128			4.7	10.2
** WBS: 1.2.1.2.2.1.6	Assemble, Bakeout, Test												
1	Clean parts	lot	1	100.00	eu	0.1	1	16.0	16	MU	35.92	0.6	0.7
2	Final vac assy,leak check	lot	1	100.00	eu	0.1	1	16.0	16	MU	35.92	0.6	0.7
3	Fiducialize		0	0.00		0.0	2	8.0	16	MS	37.73	0.6	0.6
3	Bakeout jackets	ea	1	1500.00	A91	1.5	1	8.0	8	MU	35.92	0.3	1.8
4	RGA scans, UHV pre-qualfy		0	0.00		0.0	1	16.0	16	MS	37.73	0.6	0.6
** Subtotal **						1.7			72			2.6	4.3
** WBS: 1.2.1.2.2.1.7	Installation												
1	Install/check valvs/cntrl	lot	1	200.00	eu	0.2	1	16.0	16	EI	33.00	0.5	0.7
2	Install utilities	lot	1	500.00	eu	0.5	1	16.0	16	MU	35.92	0.6	1.1
3	Install/align supprt stnd	lot	1	200.00	eu	0.2	2	16.0	32	MU	35.92	1.1	1.3
4	Instll/align vac hardware		0	0.00		0.0	2	16.0	32	MU	35.92	1.1	1.1
5	Vac cnnctns, leak check		0	0.00		0.0	2	16.0	32	MU	35.92	1.1	1.1
6	Bakeout		0	0.00		0.0	2	16.0	32	MU	35.92	1.1	1.1
7	Elec. installation		0	0.00		0.0	1	8.0	8	IEL	62.85	0.5	0.5
** Subtotal **						0.9			168			6.2	7.1
** WBS: 1.2.1.2.2.2.1	Fab/Buy Mech Parts & Subassy's												
1	Flange/mntng plate fab	ea	1	600.00	eu	0.6	1	40.0	40	MS	37.73	1.5	2.1
2	CF feed-thrus for electrn	ea	8	200.00	eu	1.6	0	0.0	0		0.00	0.0	1.6
3	Brazing & fixtures	lot	1	100.00	eu	0.1	1	20.0	20	MU	35.92	0.7	0.8
4	Feedthrus welding	lot	1	50.00	eu	0.1	1	20.0	20	MS	37.73	0.8	0.8
5	Blades fab	ea	2	100.00	eu	0.2	2	20.0	40	MS	37.73	1.5	1.7
6	In-vac parts & elec fab	lot	1	200.00	eu	0.2	1	40.0	40	MS	37.73	1.5	1.7
7	LCW hardware	lot	1	100.00	eu	0.1	1	8.0	8	MU	35.92	0.3	0.4
8	2-axis translation mech	ea	1	3000.00	eu	3.0	0	0.0	0		0.00	0.0	3.0
9	Outside vac mntng hardwre	lot	1	500.00	eu	0.5	1	20.0	20	MS	37.73	0.8	1.3
10	Blade alignment fixtures	lot	1	200.00	eu	0.2	1	20.0	20	MS	37.73	0.8	1.0
** Subtotal **						6.6			208			7.8	14.3
** WBS: 1.2.1.2.2.2.2	Fab/Buy Electrical and Controls												
1	Bias power supply	ea	2	3000.00	eu	6.0	2	8.0	16	EI	33.00	0.5	6.5
2	ILC & SBX	ea	3	1500.00	eu	4.5	3	20.0	60	EI	33.00	2.0	6.5
3	Electrometer	ea	2	1695.00	cp	3.4	2	8.0	16	EI	33.00	0.5	3.9
4	Eurocard crate	ea	1	1000.00	eu	1.0	1	16.0	16	EI	33.00	0.5	1.5
5	Thermocouples & controls	ea	2	500.00	eu	1.0	2	8.0	16	EI	33.00	0.5	1.5
6	Stepper motor controller	ea	1	3000.00	eu	3.0	1	16.0	16	EI	33.00	0.5	3.5
7	Cables	lot	1	1000.00	eu	1.0	1	40.0	40	EI	33.00	1.3	2.3
8	Flow switch	ea	2	400.00	eu	0.8	2	4.0	8	EI	33.00	0.3	1.1

Technical Components Cost Estimate

ITM NBR	ITM DESCRIPTION	UNIT MEAS	NBR UNITS	UNIT COST	COST BASIS	TOTAL ISC K$	LBR UNTS	HRS/ UNIT	TOTAL HRS	CRAFT CODE	CRAFT RATE	TOTAL LABOR K$	ISC LABOR K$
** Subtotal **						20.7			188			6.2	26.9
** WBS: 1.2.1.2.2.2.3	Fab/Buy Support Stand												
1	Slides mounting hardwre	ea	1	200.00	eu	0.2	1	8.0	8	MS	37.73	0.3	0.5
2	Support post & hardware	lot	1	3000.00	eu	3.0	1	8.0	8	MS	37.73	0.3	3.3
3	Misc hardwre & fixtures	lot	1	1000.00	eu	1.0	1	40.0	40	MS	37.73	1.5	2.5
** Subtotal **						4.2			56			2.1	6.3
** WBS: 1.2.1.2.2.2.4	Bellows												
1	Welded bellows assy	ea	2	4000.00	A91	8.0	0	0.0	0		0.00	0.0	8.0
2	Blank flanges,gaskets,etc	lot	2	300.00	cp	0.6	0	0.0	0		0.00	0.0	0.6
3	Inspect,clean,bake	lot	2	50.00	eu	0.1	2	2.0	4	MU	35.92	0.1	0.2
** Subtotal **						8.7			4			0.1	8.8
** WBS: 1.2.1.2.2.2.5	Assemble, Bakeout, Test (Assembly Shop)												
1	Assemble/test PBPM mech	ea	1	500.00	eu	0.5	2	20.0	40	MU	35.92	1.4	1.9
2	Assemble/test PBPM elec	ea	1	500.00	eu	0.5	1	40.0	40	EI	33.00	1.3	1.8
3	Bakeout/UHV pre-qualify	ea	1	500.00	eu	0.5	1	40.0	40	MU	35.92	1.4	1.9
4	Fiducialization		0	0.00		0.0	2	16.0	32	MU	35.92	1.1	1.1
5	Misc assy equip,jackets,	lot	1	1000.00	eu	1.0	1	20.0	20	MU	35.92	0.7	1.7
** Subtotal **						2.5			172			6.1	8.6
** WBS: 1.2.1.2.2.2.6	Installation												
1	LCW Hardware & connection	lot	1	300.00	eu	0.3	2	20.0	40	MU	35.92	1.4	1.7
2	Transport & on-site setup	lot	1	200.00	eu	0.2	2	8.0	16	MU	35.92	0.6	0.8
3	Vac assemble & leak check	lot	1	100.00	eu	0.1	2	16.0	32	MU	35.92	1.1	1.2
4	Installation alignment		0	0.00		0.0	2	16.0	32	MS	37.73	1.2	1.2
5	Mech install,test,debug	lot	1	100.00	eu	0.1	2	20.0	40	MU	35.92	1.4	1.5
6	ELec. installation	lot	1	100.00	eu	0.1	1	20.0	20	IEL	62.85	1.3	1.4
7	Final bake & UHV qualify		0	0.00		0.0	2	20.0	40	MU	35.92	1.4	1.4
** Subtotal **						0.8			220			8.5	9.3
** WBS: 1.2.1.2.2.3.1	Fab/Buy Mech Parts & Subassy's												
1	Machine absorber blades	ea	2	1000.00	A91	2.0	2	40.0	80	MS	37.73	3.0	5.0
2	Braze absorber blades	ea	2	100.00	eu	0.2	2	20.0	40	MS	37.73	1.5	1.7
3	Brazing tooling/fixtures	ea	1	200.00	eu	0.2	1	20.0	20	MS	37.73	0.8	1.0
4	Blade/pivot mounting	ea	2	500.00	A91	1.0	2	60.0	120	MS	37.73	4.5	5.5
5	Pneumatic actuator mechan	ea	2	500.00	eu	1.0	2	40.0	80	MS	37.73	3.0	4.0
6	Limit stops & switches	ea	2	100.00	eu	0.2	2	20.0	40	MS	37.73	1.5	1.7
7	Bellws/conflat ass'y/weld	ea	2	1000.00	A91	2.0	2	40.0	80	MS	37.73	3.0	5.0
** Subtotal **						6.6			460			17.4	24.0
** WBS: 1.2.1.2.2.3.2	Fab/Buy Electrical and Controls												
1	ILC & SBX	ea	1	1500.00	eu	1.5	1	20.0	20	EI	33.00	0.7	2.2
2	Cables	lot	1	200.00	eu	0.2	1	8.0	8	EI	33.00	0.3	0.5
3	Flow switch & interlocks	ea	2	400.00	eu	0.8	2	4.0	8	EI	33.00	0.3	1.1
4	Position indicators	set	1	500.00	eu	0.5	1	8.0	8	EI	33.00	0.3	0.8
5	Air solenoids	ea	4	500.00	eu	2.0	4	8.0	32	EI	33.00	1.1	3.1
6	Air pressure interlocks	ea	1	500.00	eu	0.5	1	16.0	16	EI	33.00	0.5	1.0
** Subtotal **						5.5			92			3.0	8.5
** WBS: 1.2.1.2.2.3.3	Fab/Buy Vacuum Chamber & Supports												
1	Custom vacuum chamber	ea	1	8000.00	A91	8.0	1	40.0	40	MU	35.92	1.4	9.4
2	Misc flanges & UHV hardwr	lot	1	2500.00	eu	2.5	0	0.0	0		0.00	0.0	2.5
3	Mounting struts/hardware	ea	6	500.00	A91	3.0	6	8.0	48	MS	37.73	1.8	4.8
4	Support posts,frame,hrdwr	lot	1	1500.00	A91	1.5	1	40.0	40	MS	37.73	1.5	3.0
** Subtotal **						15.0			128			4.8	19.8

Technical Components Cost Estimate

ITM NBR	ITM DESCRIPTION	UNIT MEAS	NBR UNITS	UNIT COST	COST BASIS	TOTAL ISC K$	LBR UNTS	HRS/ UNIT	TOTAL HRS	CRAFT CODE	CRAFT RATE	TOTAL LABOR K$	ISC + LABOR K$
** WBS: 1.2.1.2.2.3.4	Vacuum Pumping, Gauges, Controllers, P.S.												
1	Ion pump, 400 l/s	ea	1	7527.00	A92	7.5	1	4.0	4	MU	35.92	0.1	7.7
2	Ion pump controller	ea	1	2180.00	A92	2.2	1	4.0	4	EI	33.00	0.1	2.3
3	Ion pump cable,bakeable	ea	1	250.00	A91	0.2	1	4.0	4	EI	33.00	0.1	0.4
4	IEEE-48 cable,3m cntrller	ea	1	421.00	A92	0.4	0	0.0	0		0.00	0.0	0.4
5	Roughing valve	ea	2	650.00	A91	1.3	0	0.0	0		0.00	0.0	1.3
6	Ion gauge & controls	ea	1	3500.00	A91	3.5	1	4.0	4	MU	35.92	0.1	3.6
7	Ion gauge cable, bakeable	ea	1	250.00	cp	0.2	1	4.0	4	EI	33.00	0.1	0.4
8	Junction box,IG cable	ea	1	200.00	eu	0.2	1	4.0	4	EI	33.00	0.1	0.3
9	Interlock cable	ea	1	100.00	eu	0.1	0	0.0	0		0.00	0.0	0.1
** Subtotal **						15.7			24			0.8	16.5
** WBS: 1.2.1.2.2.3.5	Assemble, Bakeout, Test												
1	Assemble & test	ea	1	500.00	eu	0.5	2	80.0	160	MU	35.92	5.7	6.2
2	Bakeout & UHV qualify	lot	1	500.00	eu	0.5	2	40.0	80	MS	37.73	3.0	3.5
3	Survey/calibration		0	0.00		0.0	2	16.0	32	MU	35.92	1.1	1.1
4	Misc tools,fixtures,cart,	lot	1	1000.00	eu	1.0	1	80.0	80	MU	35.92	2.9	3.9
** Subtotal **						2.0			352			12.8	14.8
** WBS: 1.2.1.2.2.3.6	Installation												
1	LCW hardware/connections	lot	1	300.00	eu	0.3	2	16.0	32	MU	35.92	1.1	1.4
2	Transport/on-site setup	lot	1	200.00	eu	0.2	2	16.0	32	MU	35.92	1.1	1.3
3	Vac assemble & leak check	lot	1	50.00	eu	0.1	2	16.0	32	MU	35.92	1.1	1.2
4	Installation alignment		0	0.00		0.0	2	16.0	32	MS	37.73	1.2	1.2
5	Pneumatic hardware/cnnctn	lot	1	300.00	eu	0.3	2	16.0	32	MU	35.92	1.1	1.4
6	Mech install/test/debug	lot	1	50.00	eu	0.1	2	16.0	32	MU	35.92	1.1	1.2
7	Elec installation		0	0.00		0.0	1	16.0	16	IEL	62.85	1.0	1.0
** Subtotal **						0.9			208			8.0	8.9
** WBS: 1.2.1.2.2.3.7	Titanium Sublimation Pump												
1	TSP pump spool piece	ea	1	2700.00	A91	2.7	0	0.0	0		0.00	0.0	2.7
2	TSP filaments & controllr	ea	1	3500.00	eu	3.5	1	8.0	8	EI	33.00	0.3	3.8
3	Flanges & UHV hardware	lot	1	500.00	eu	0.5	0	0.0	0		0.00	0.0	0.5
4	Misc (extrusions, etc.)	lot	1	1000.00	eu	1.0	1	20.0	20	MS	37.73	0.8	1.8
** Subtotal **						7.7			28			1.0	8.7
** WBS: 1.2.1.2.2.3.8	Isolation Valve												
1	Valve & controllr proc.	ea	1	18000.00	A91	18.0	0	0.0	0		0.00	0.0	18.0
2	Prelim assemble & test	lot	1	50.00	eu	0.1	1	8.0	8	MU	35.92	0.3	0.3
3	Inspection, cleaning, etc	lot	1	50.00	eu	0.1	1	4.0	4	MU	35.92	0.1	0.2
4	Cables & connectors	lot	1	200.00	eu	0.2	1	2.0	2	EI	33.00	0.1	0.3
5	Blank flanges & hardware	lot	2	200.00	eu	0.4	0	0.0	0		0.00	0.0	0.4
** Subtotal **						18.7			14			0.5	19.2
** WBS: 1.2.1.2.2.4.1	Fast Valve												
1	Modified VAT fast shutter	ea	1	26000.00	A91	26.0	0	0.0	0		0.00	0.0	26.0
** Subtotal **						26.0			0			0.0	26.0
** WBS: 1.2.1.2.2.4.2	Fab/Buy Electrical and Controls												
1	Cables & connectors	lot	1	500.00	A91	0.5	1	8.0	8	EI	33.00	0.3	0.8
2	Air pressure interlocks	ea	1	500.00	eu	0.5	1	16.0	16	EI	33.00	0.5	1.0
3	Junction box,IG cable	ea	3	200.00	eu	0.6	0	0.0	0		0.00	0.0	0.6
4	Interlock cable	ea	1	500.00	eu	0.5	0	0.0	0		0.00	0.0	0.5
** Subtotal **						2.1			24			0.8	2.9
** WBS: 1.2.1.2.2.4.3	Bellows												
1	Welded bellows assy	ea	1	3000.00	A91	3.0	1	4.0	4	MS	37.73	0.2	3.2
2	Blank flanges,gaskets,etc	lot	1	300.00	cp	0.3	0	0.0	0		0.00	0.0	0.3
3	Inspect,clean,bake	lot	1	50.00	eu	0.1	1	4.0	4	MU	35.92	0.1	0.2

Technical Components Cost Estimate

ITM NBR	ITM DESCRIPTION	UNIT MEAS	NBR UNITS	UNIT COST	COST BASIS	TOTAL ISC K$	LBR UNTS	HRS/ UNIT	TOTAL HRS	CRAFT CODE	CRAFT RATE	TOTAL LABOR K$	ISC + LABOR K$
** Subtotal **						3.3			8			0.3	3.6
** WBS: 1.2.1.2.2.4.4	Aperture Plate												
1	Water-cooled absorber	ea	1	800.00	A91	0.8	1	40.0	40	MS	37.73	1.5	2.3
2	Brazing,fixtures,tooling	lot	1	200.00	eu	0.2	1	30.0	30	MU	35.92	1.1	1.3
3	Flange gaskets & hardware	lot	2	200.00	eu	0.4	1	10.0	10	MS	37.73	0.4	0.8
** Subtotal **						1.4			80			3.0	4.4
** WBS: 1.2.1.2.2.4.5	Assemble, Bakeout, Test												
1	Assemble & test	ea	1	500.00	eu	0.5	1	80.0	80	MU	35.92	2.9	3.4
2	Survey/calibration		0	0.00		0.0	1	16.0	16	MU	35.92	0.6	0.6
** Subtotal **						0.5			96			3.4	3.9
** WBS: 1.2.1.2.2.4.6	Installation												
1	Pneumatic hardwar/cnnctns	lot	1	300.00	eu	0.3	1	16.0	16	MU	35.92	0.6	0.9
2	Mech install/test/debug	lot	1	50.00	eu	0.1	1	16.0	16	MU	35.92	0.6	0.6
3	Elec installation		0	0.00		0.0	1	16.0	16	IEL	62.85	1.0	1.0
** Subtotal **						0.3			48			2.2	2.5
** WBS: 1.2.1.2.2.5.1	Fab/Buy Mech Parts & Subassy's												
1	Sintered tungsten shutter	ea	1	4000.00	eu	4.0	1	40.0	40	MS	37.73	1.5	5.5
2	Shutter flange-mounting	ea	1	500.00	eu	0.5	1	40.0	40	MS	37.73	1.5	2.0
3	In-vac position stops/mon	ea	1	1500.00	eu	1.5	1	80.0	80	MS	37.73	3.0	4.5
4	Bellows/cnflat ass'y/weld	ea	1	2000.00	eu	2.0	1	20.0	20	MS	37.73	0.8	2.8
5	Pneumatic actuatr/mountng	ea	1	2000.00	eu	2.0	1	120.0	120	MS	37.73	4.5	6.5
** Subtotal **						10.0			300			11.3	21.3
** WBS: 1.2.1.2.2.5.2	Fab/Buy Electrical and Controls												
1	ILC & SBX	ea	1	1500.00	eu	1.5	1	16.0	16	EI	33.00	0.5	2.0
2	Cables	lot	1	200.00	eu	0.2	1	16.0	16	EI	33.00	0.5	0.7
3	Position indicators	set	1	200.00	eu	0.2	1	16.0	16	EI	33.00	0.5	0.7
4	Air solenoids	ea	1	200.00	eu	0.2	1	8.0	8	EI	33.00	0.3	0.5
5	Air pressure interlocks	ea	1	200.00	eu	0.2	1	16.0	16	EI	33.00	0.5	0.7
** Subtotal **						2.3			72			2.4	4.7
** WBS: 1.2.1.2.2.5.3	Fab/Buy Vacuum Chamber & Supports												
1	Custom vacuum chamber	ea	1	5000.00	A91	5.0	1	20.0	20	MU	35.92	0.7	5.7
2	Misc flanges & UHV hardwr	lot	1	1000.00	eu	1.0	0	0.0	0		0.00	0.0	1.0
3	Roughing valve	ea	2	650.00	A91	1.3	0	0.0	0		0.00	0.0	1.3
4	Mounting struts/hardware	ea	6	500.00	A91	3.0	6	8.0	48	MS	37.73	1.8	4.8
5	Support posts	ea	2	1000.00	eu	2.0	2	20.0	40	MS	37.73	1.5	3.5
** Subtotal **						12.3			108			4.0	16.3
** WBS: 1.2.1.2.2.5.4	Vacuum Pumping, Gauges, Controllers, P.S.												
1	Ion pump, 220 l/s	ea	1	4865.00	A91	4.9	1	4.0	4	MU	35.92	0.1	5.0
2	Ion pump controller	ea	1	2500.00	A91	2.5	1	4.0	4	EI	33.00	0.1	2.6
3	Ion pump cable, bakeable	ea	1	250.00	A91	0.2	0	0.0	0		0.00	0.0	0.2
4	IEEE-488 cable,3m cntller	ea	1	150.00	cp	0.1	0	0.0	0		0.00	0.0	0.1
5	Ion gauge & controls	ea	1	3500.00	A91	3.5	1	4.0	4	MU	35.92	0.1	3.6
6	Ion gauge cable, bakeable	ea	1	250.00	cp	0.2	1	4.0	4	EI	33.00	0.1	0.4
7	Junction box, IG cable	ea	1	200.00	eu	0.2	0	0.0	0		0.00	0.0	0.2
8	Ion gauge controller	ea	1	3500.00	cp	3.5	0	0.0	0		0.00	0.0	3.5
9	Interlock cable	ea	1	100.00	eu	0.1	0	0.0	0		0.00	0.0	0.1
** Subtotal **						15.3			16			0.6	15.9
** WBS: 1.2.1.2.2.5.5	Assemble, Bakeout, Test												
1	Assemble & test	lot	1	500.00	eu	0.5	2	80.0	160	MU	35.92	5.7	6.2
2	Pre-bakeout tungstn block	ea	1	300.00	eu	0.3	1	20.0	20	MU	35.92	0.7	1.0

Technical Components Cost Estimate

ITM NBR	ITM DESCRIPTION	UNIT MEAS	NBR UNITS	UNIT COST	COST BASIS	TOTAL ISC K$	LBR UNTS	HRS/ UNIT	TOTAL HRS	CRAFT CODE	CRAFT RATE	TOTAL LABOR K$	ISC + LABOR K$
3	Bakeout & UHV qualify	ea	1	500.00	eu	0.5	2	40.0	80	MU	35.92	2.9	3.4
3	Survey/calibration		0	0.00		0.0	2	16.0	32	MU	35.92	1.1	1.1
4	Misc tools,fixtures,cart,	lot	1	1000.00	eu	1.0	1	40.0	40	MU	35.92	1.4	2.4
** Subtotal **						2.3			332			11.9	14.2
** WBS: 1.2.1.2.2.5.6	Installation												
1	Transport & on-site setup	lot	1	200.00	eu	0.2	2	16.0	32	MU	35.92	1.1	1.3
2	Vac assemble & leak check	lot	1	50.00	eu	0.1	2	16.0	32	MU	35.92	1.1	1.2
3	Instlltn algnmnt (stnd)		0	0.00		0.0	2	16.0	32	MS	37.73	1.2	1.2
4	Pneumatic hardwar/cnnctns	lot	1	300.00	eu	0.3	1	16.0	16	MU	35.92	0.6	0.9
5	Mech install,test,debug	lot	1	50.00	eu	0.1	2	16.0	32	MU	35.92	1.1	1.2
6	Elec installation		0	0.00		0.0	1	16.0	16	EI	33.00	0.5	0.5
** Subtotal **						0.6			160			5.8	6.4
** WBS: 1.2.1.2.2.5.7	Shield Wall Transition Spool												
1	SWT spool piece	ea	1	2500.00	A91	2.5	1	4.0	4	MS	37.73	0.2	2.7
2	Misc. flanges & UHV hrdwr	lot	1	500.00	eu	0.5	1	4.0	4	MS	37.73	0.2	0.7
3	Lead shielding & supports	lot	1	500.00	eu	0.5	1	40.0	40	MS	37.73	1.5	2.0
4	Struts and hardware	lot	2	500.00	A91	1.0	2	8.0	16	MS	37.73	0.6	1.6
5	Misc extrusions, etc.	lot	1	1000.00	eu	1.0	1	40.0	40	MS	37.73	1.5	2.5
** Subtotal **						5.5			104			3.9	9.4
** WBS: 1.2.1.2.2.5.8	Isolation Valve												
1	Valve & controller proc	ea	1	15000.00	vq	15.0	0	0.0	0		0.00	0.0	15.0
2	Prelim assy & test	lot	1	50.00	eu	0.1	1	8.0	8	MU	35.92	0.3	0.3
3	Inspection,cleaning,etc.	lot	1	50.00	eu	0.1	1	4.0	4	MU	35.92	0.1	0.2
4	Cables & connectors	ea	1	200.00	eu	0.2	1	2.0	2	EI	33.00	0.1	0.3
5	Blank flanges & hardware	lot	2	200.00	eu	0.4	0	0.0	0		0.00	0.0	0.4
** Subtotal **						15.7			14			0.5	16.2
** WBS: 1.2.1.2.2.6.1	Fab/Buy Mech Parts & Subassy's												
1	Flange & mntng plate fab	ea	1	600.00	eu	0.6	1	40.0	40	MS	37.73	1.5	2.1
2	Cf feedthru for electrncs	ea	8	200.00	eu	1.6	0	0.0	0		0.00	0.0	1.6
3	Brazing & fixtures	ea	1	100.00	eu	0.1	1	20.0	20	MU	35.92	0.7	0.8
4	Feedthrus - welding	ea	1	50.00	eu	0.1	1	20.0	20	MS	37.73	0.8	0.8
5	Blades fab	ea	4	100.00	eu	0.4	4	20.0	80	MS	37.73	3.0	3.4
6	In-vac parts & elec fab	lot	1	200.00	eu	0.2	1	40.0	40	MS	37.73	1.5	1.7
7	LCW Hardware	lot	1	100.00	eu	0.1	1	8.0	8	MU	35.92	0.3	0.4
8	2-axis transltn mechanism	ea	1	3000.00	eu	3.0	0	0.0	0		0.00	0.0	3.0
9	Outside-vac mntng hardwre	lot	1	500.00	eu	0.5	1	20.0	20	MS	37.73	0.8	1.3
10	Blade alignment fixtures	ea	1	200.00	eu	0.2	1	20.0	20	MS	37.73	0.8	1.0
** Subtotal **						6.8			248			9.3	16.1
** WBS: 1.2.1.2.2.6.2	Fab/Buy Electrical and Controls												
1	Bias power supply	ea	2	3000.00	eu	6.0	2	8.0	16	EI	33.00	0.5	6.5
2	ILC & SBX	ea	3	1500.00	eu	4.5	3	20.0	60	EI	33.00	2.0	6.5
3	Electrometer	ea	4	1695.00	cp	6.8	4	8.0	32	EI	33.00	1.1	7.8
4	Eurocard crate	ea	1	1000.00	eu	1.0	1	16.0	16	EI	33.00	0.5	1.5
5	Thermocouples & controls	ea	2	500.00	eu	1.0	2	8.0	16	EI	33.00	0.5	1.5
6	Stepper motor controller	ea	1	3000.00	eu	3.0	1	16.0	16	EI	33.00	0.5	3.5
7	Cables	lot	1	1000.00	eu	1.0	1	32.0	32	EI	33.00	1.1	2.1
8	Flow switch	ea	2	400.00	eu	0.8	2	4.0	8	EI	33.00	0.3	1.1
** Subtotal **						24.1			196			6.5	30.5
** WBS: 1.2.1.2.2.6.3	Fab/Buy Support Stand												
1	Slides mounting hardwr	ea	1	200.00	EU	0.2	1	8.0	8	MS	37.73	0.3	0.5
2	Support post & hardware	ea	1	3000.00	eu	3.0	1	8.0	8	MS	37.73	0.3	3.3
3	Misc hardware & fixtures	ea	1	1000.00	eu	1.0	1	40.0	40	MS	37.73	1.5	2.5

Technical Components Cost Estimate

ITM NBR	ITM DESCRIPTION	UNIT MEAS	NBR UNITS	UNIT COST COST BASIS	TOTAL ISC K$	LBR UNTS	HRS/ UNIT	TOTAL HRS	CRAFT CODE	CRAFT RATE	TOTAL LABOR K$	ISC + LABOR K$
** Subtotal **					4.2			56			2.1	6.3
** WBS: 1.2.1.2.2.6.4	Bellows											
1	Welded bellows assy	ea	2	4000.00 A91	8.0	0	0.0	0		0.00	0.0	8.0
2	Blank flanges, gaskets,	lot	2	300.00 cp	0.6	0	0.0	0		0.00	0.0	0.6
3	Inspection,cleaning,bake	lot	2	50.00 eu	0.1	2	2.0	4	MU	35.92	0.1	0.2
** Subtotal **					8.7			4			0.1	8.8
** WBS: 1.2.1.2.2.6.5	Assemble, Bakeout, Test											
1	Assemble/test PBPM mech	ea	1	500.00 eu	0.5	2	20.0	40	MU	35.92	1.4	1.9
2	Assemble/test PBPM elec	ea	1	500.00 eu	0.5	1	40.0	40	EI	33.00	1.3	1.8
3	Bakeout/UHV pre-qualify	ea	1	500.00 eu	0.5	1	40.0	40	MU	35.92	1.4	1.9
4	Fiducialization		0	0.00	0.0	2	16.0	32	MU	35.92	1.1	1.1
5	Misc assy equip,jackets,	lot	1	1000.00 eu	1.0	1	20.0	20	MU	35.92	0.7	1.7
** Subtotal **					2.5			172			6.1	8.6
** WBS: 1.2.1.2.2.6.6	Installation											
1	LCW Hardware & connection	lot	1	300.00 eu	0.3	2	20.0	40	MU	35.92	1.4	1.7
2	Transport & on-site setup	lot	1	200.00 eu	0.2	2	8.0	16	MU	35.92	0.6	0.8
3	Vac assemble & leak check	lot	1	100.00 eu	0.1	2	16.0	32	MU	35.92	1.1	1.2
4	Installation alignment		0	0.00	0.0	2	16.0	32	MU	35.92	1.1	1.1
5	Mech install,test,debug	lot	1	100.00 eu	0.1	2	20.0	40	MU	35.92	1.4	1.5
6	ELec. installation	lot	1	100.00 eu	0.1	1	20.0	20	IEL	62.85	1.3	1.4
7	Final bake & UHV qualify		0	0.00	0.0	2	20.0	40	MU	35.92	1.4	1.4
** Subtotal **					0.8			220			8.4	9.2
** WBS: 1.2.1.2.2.7.1	Fab/Buy Mech Parts & Subassy's											
1	Misc machine shop effort	lot	1	1000.00 eu	1.0	1	80.0	80	MS	37.73	3.0	4.0
2	Misc mech tech & tools	lot	1	1000.00 eu	1.0	1	80.0	80	MU	35.92	2.9	3.9
** Subtotal **					2.0			160			5.9	7.9
** WBS: 1.2.1.2.2.7.2	Fab/Buy Electical and Controls											
1	Cables,valve actuation &	lot	3	100.00 eu	0.3	3	8.0	24	EI	33.00	0.8	1.1
2	X-connect blocks & frame	ea	1	500.00 eu	0.5	1	40.0	40	EI	33.00	1.3	1.8
3	Relays blocks & frame	ea	1	580.00 cp	0.6	1	40.0	40	EI	33.00	1.3	1.9
4	48 Ch. opto-isolator	ea	1	700.00 cp	0.7	1	40.0	40	EI	33.00	1.3	2.0
5	Cable trays, conduit, etc	lot	1	2000.00 eu	2.0	1	80.0	80	IEL	62.85	5.0	7.0
6	Double elec. rack	ea	1	1300.00 eu	1.3	1	40.0	40	EI	33.00	1.3	2.6
7	BA panel 3 ph 30A	ea	1	50.00 cp	0.1	1	1.0	1	EI	33.00	0.0	0.1
8	Breaker panel	ea	2	200.00 cp	0.4	2	4.0	8	EI	33.00	0.3	0.7
9	Plug strip	ea	2	20.00 eu	0.0	2	4.0	8	EI	33.00	0.3	0.3
10	Rack fans	ea	2	50.00 eu	0.1	2	2.0	4	EI	33.00	0.1	0.2
11	Flow switches/interlocks	ea	2	400.00 eu	0.8	2	8.0	16	EI	33.00	0.5	1.3
** Subtotal **					6.8			301			12.3	19.1
** WBS: 1.2.1.2.2.7.3	Fab/Buy Vacuum Chamber & Supports											
1	Misc flanges,viewprts,etc	lot	1	3000.00 eu	3.0	0	0.0	0		0.00	0.0	3.0
2	Roughing valves	ea	4	650.00 cp	2.6	0	0.0	0		0.00	0.0	2.6
3	Misc. unistrut/hardware	lot	1	500.00 eu	0.5	1	20.0	20	MU	35.92	0.7	1.2
** Subtotal **					6.1			20			0.7	6.8
** WBS: 1.2.1.2.2.7.4	Vacuum Pumping, Gauges, Controllers, P.S.											
1	RGA system	ea	1	12000.00 cp	12.0	1	40.0	40	MU	35.92	1.4	13.4
2	RGA cable, bakeable	ea	1	250.00 cp	0.2	1	8.0	8	EI	33.00	0.3	0.5
3	Junction box, RGA cable	ea	1	200.00 eu	0.2	0	0.0	0		0.00	0.0	0.2
4	Interlock cable	ea	1	100.00 eu	0.1	0	0.0	0		0.00	0.0	0.1
** Subtotal **					12.5			48			1.7	14.3

Technical Components Cost Estimate

ITM NBR	ITM DESCRIPTION	UNIT MEAS	NBR UNITS	UNIT COST	COST BASIS	TOTAL ISC K$	LBR UNTS	HRS/ UNIT	TOTAL HRS	CRAFT CODE	CRAFT RATE	TOTAL LABOR K$	ISC + LABOR K$
** WBS: 1.2.1.2.2.7.5	Assemble, Bakeout, Test												
1	Misc assemble & test	ea	1	1000.00	eu	1.0	2	40.0	80	MU	35.92	2.9	3.9
2	Misc bakeout/UHV qualify	lot	1	1000.00	eu	1.0	2	40.0	80	MU	35.92	2.9	3.9
3	Survey/calibration		0	0.00		0.0	3	32.0	96	MU	35.92	3.4	3.4
** Subtotal **						2.0			256			9.2	11.2
** WBS: 1.2.1.2.2.7.6	Installation												
1	Shielding wall modify	lot	1	500.00	eu	0.5	2	40.0	80	MU	35.92	2.9	3.4
2	Lead shielding installatn	lot	1	500.00	eu	0.5	1	40.0	40	MU	35.92	1.4	1.9
3	Installatn final alignment		0	0.00		0.0	2	40.0	80	MU	35.92	2.9	2.9
4	F.E. pneumatic service	ea	1	1000.00	eu	1.0	1	40.0	40	MU	35.92	1.4	2.4
5	F.E. LCW service	lot	1	1000.00	eu	1.0	1	40.0	40	MU	35.92	1.4	2.4
6	Mech install/test/debug	lot	1	50.00	eu	0.1	1	40.0	40	MU	35.92	1.4	1.5
7	Elec installation		0	0.00		0.0	1	80.0	80	IEL	62.85	5.0	5.0
8	LCW temp control system	ea	1	5000.00	A90	5.0	1	40.0	40	EI	33.00	1.3	6.3
** Subtotal **						8.1			440			17.8	25.9
** WBS: 1.2.1.2.2.8	Safety Systems												
1	ILC & SBX	ea	2	1500.00	eu	3.0	2	20.0	40	EI	33.00	1.3	4.3
2	Eurocard crate	ea	2	800.00	eu	1.6	0	0.0	0		0.00	0.0	1.6
3	Key panel	ea	1	400.00	cp	0.4	0	0.0	0		0.00	0.0	0.4
4	Monitor lights panel	ea	6	500.00	cp	3.0	0	0.0	0		0.00	0.0	3.0
5	Push button panel	ea	1	500.00	cp	0.5	0	0.0	0		0.00	0.0	0.5
6	Breaker panel	ea	1	500.00	cp	0.5	0	0.0	0		0.00	0.0	0.5
7	Cables	lot	1	500.00	eu	0.5	0	0.0	0		0.00	0.0	0.5
8	Wiring assembly		0	0.00		0.0	1	120.0	120	EI	33.00	4.0	4.0
9	Video camera & lens	ea	1	800.00	cp	0.8	0	0.0	0		0.00	0.0	0.8
10	Video monitor	ea	1	300.00	cp	0.3	0	0.0	0		0.00	0.0	0.3
11	RG59 coax,camera/monitor	ea	1	50.00	eu	0.1	1	2.0	2	EI	33.00	0.1	0.1
12	Video connectors	ea	2	5.00	eu	0.0	2	0.5	1	EI	33.00	0.0	0.0
13	Misc hardware	lot	1	1000.00	eu	1.0	1	80.0	80	MS	37.73	3.0	4.0
14	Elec. installation		0	0.00		0.0	1	40.0	40	IEL	62.85	2.5	2.5
** Subtotal **						11.7			283			10.9	22.6
** WBS: 1.2.1.2.3.1.1	Fab/Buy Machined Parts & Subassy's												
1	Machine absorber blades	ea	2	1000.00	A91	2.0	2	40.0	80	MS	37.73	3.0	5.0
2	Braze absorber blades	ea	2	100.00	A91	0.2	2	20.0	40	MS	37.73	1.5	1.7
3	Brazing tooling/fixtures	ea	1	200.00	A91	0.2	1	20.0	20	MS	37.73	0.8	1.0
4	Blade/pivot mounting	ea	2	500.00	A91	1.0	2	60.0	120	MS	37.73	4.5	5.5
5	Actuator mechanism	ea	2	500.00	A91	1.0	2	40.0	80	MS	37.73	3.0	4.0
6	Limit stops & switches	ea	2	100.00	A91	0.2	2	20.0	40	MS	37.73	1.5	1.7
7	Bellws/conflat ass'y/weld	ea	2	1000.00	A91	2.0	2	40.0	80	MS	37.73	3.0	5.0
** Subtotal **						6.6			460			17.4	24.0
** WBS: 1.2.1.2.3.1.2	Fab/Buy Electrical and Controls												
1	Stepper/encoder/limits	ea	2	3000.00	eu	6.0	2	20.0	40	MS	37.73	1.5	7.5
2	Driver/encoder cables	ea	2	200.00	eu	0.4	1	16.0	16	EI	33.00	0.5	0.9
3	Flow switch & interlocks	ea	2	400.00	eu	0.8	2	4.0	8	EI	33.00	0.3	1.1
4	VME module,RS232,B-port	eat	1	800.00	eu	0.8	1	16.0	16	EI	33.00	0.5	1.3
5	CAble, RS232	ea	2	50.00	eu	0.1	0	0.0	0		0.00	0.0	0.1
6	Motor/encoder controllers	ea	2	2000.00	eu	4.0	2	8.0	16	EI	33.00	0.5	4.5
7	Triax cable, 100 '	lot	2	100.00	eu	0.2	2	8.0	16	EI	33.00	0.5	0.7
** Subtotal **						12.3			112			3.9	16.2
** WBS: 1.2.1.2.3.1.3	Fab/Buy Vacuum Chamber & Supports												
1	Custom vacuum chamber	ea	1	8000.00	A91	8.0	1	40.0	40	MU	35.92	1.4	9.4
2	Misc flanges/UHV hardware	lot	1	2500.00	eu	2.5	0	0.0	0		0.00	0.0	2.5
3	Mounting struts/hardware	ea	6	500.00	A91	3.0	6	8.0	48	MS	37.73	1.8	4.8
4	Support posts,frame,hrdwr	lot	1	1500.00	A91	1.5	1	40.0	40	MS	37.73	1.5	3.0

Technical Components Cost Estimate

ITM NBR	ITM DESCRIPTION	UNIT MEAS	NBR UNITS	UNIT COST	COST BASIS	TOTAL ISC K$	LBR UNTS	HRS/ UNIT	TOTAL HRS	CRAFT CODE	CRAFT RATE	TOTAL LABOR K$	ISC LABOR K$
** Subtotal **						15.0			128			4.8	19.8
** WBS: 1.2.1.2.3.1.4	Vacuum Pumping, Gauges, Controllers, P.S.												
1	Ion pump, 400 l/s	ea	1	7500.00	A91	7.5	1	4.0	4	MU	35.92	0.1	7.6
2	Ion pump controller	ea	1	2500.00	A91	2.5	0	4.0	0	EI	33.00	0.0	2.5
3	Ion pump cable,bakeable	ea	1	250.00	A91	0.2	0	0.0	0		0.00	0.0	0.2
4	IEEE-48 cable,3m cntrller	ea	1	150.00	cp	0.1	0	0.0	0		0.00	0.0	0.1
5	Roughing valve	ea	2	650.00	A91	1.3	0	0.0	0		0.00	0.0	1.3
6	Ion gauge & controls	ea	1	3500.00	A91	3.5	1	4.0	4	MU	35.92	0.1	3.6
7	Ion gauge cable, bakeable	ea	1	250.00	cp	0.2	1	4.0	4	EI	33.00	0.1	0.4
8	Junction box,IG cable	ea	1	200.00	eu	0.2	1	4.0	4	EI	33.00	0.1	0.3
9	Interlock cable	ea	1	100.00	eu	0.1	0	0.0	0		0.00	0.0	0.1
** Subtotal **						15.8			16			0.6	16.3
** WBS: 1.2.1.2.3.1.5	Assemble, Bakeout, Test												
1	Assemble & test	ea	1	500.00	eu	0.5	2	80.0	160	MU	35.92	5.7	6.2
2	Bakeout & UHV qualify	lot	1	500.00	eu	0.5	2	40.0	80	MU	35.92	2.9	3.4
3	Survey/calibration		0	0.00		0.0	2	16.0	32	MU	35.92	1.1	1.1
4	Misc tools,fixtures,cart	lot	1	1000.00	eu	1.0	1	80.0	80	MU	35.92	2.9	3.9
** Subtotal **						2.0			352			12.6	14.6
** WBS: 1.2.1.2.3.1.6	Installation												
1	LCW hardware/connections	lot	1	300.00	eu	0.3	2	16.0	32	MU	35.92	1.1	1.4
2	Transport/on-site setup	lot	1	200.00	eu	0.2	2	16.0	32	MU	35.92	1.1	1.3
3	Vac assemble & leak check	lot	1	50.00	eu	0.1	2	16.0	32	MU	35.92	1.1	1.2
4	Installation alignment		0	0.00		0.0	2	16.0	32	MS	37.73	1.2	1.2
5	Mech install/test/debug	lot	1	50.00	eu	0.1	2	16.0	32	MU	35.92	1.1	1.2
6	Elec installation		0	0.00		0.0	1	16.0	16	IEL	62.85	1.0	1.[illegible]
** Subtotal **						0.6			176			6.8	7.4
** WBS: 1.2.1.2.3.1.7	Beam Diagnostic Device												
1	Linear drive mech(VGassy)	ea	1	3000.00	cp	3.0	0	0.0	0		0.00	0.0	3.0
2	Mods for water cooling	ea	1	200.00	eu	0.2	1	20.0	20	MS	37.73	0.8	1.0
3	In-vac parts fab	lot	1	1000.00	eu	1.0	1	80.0	80	MS	37.73	3.0	4.0
4	Brazing & welding assy	ea	1	200.00	A91	0.2	1	20.0	20	MS	37.73	0.8	1.0
5	Phosphor coating	ea	1	500.00	eu	0.5	0	0.0	0		0.00	0.0	0.5
** Subtotal **						4.9			120			4.5	9.4
** WBS: 1.2.1.2.3.1.8	Collimating Spool												
1	Spool piece	ea	1	1250.00	A91	1.2	1	8.0	8	MU	35.92	0.3	1.5
2	Misc flanges,UHV hardware	lot	1	500.00	eu	0.5	0	0.0	0		0.00	0.0	0.5
3	Lead shielding & mounting	lot	1	500.00	eu	0.5	1	40.0	40	MS	37.73	1.5	2.0
** Subtotal **						2.2			48			1.8	4.0
** WBS: 1.2.1.2.3.1.9	Bellows												
1	Welded bellows assy	ea	1	3000.00	A91	3.0	1	4.0	4	MS	37.73	0.2	3.2
2	Blank flanges,gaskets,etc	lot	1	300.00	cp	0.3	0	0.0	0		0.00	0.0	0.3
3	Inspection,cleaning,bake	ea	1	50.00	eu	0.1	1	4.0	4	MU	35.92	0.1	0.2
** Subtotal **						3.3			8			0.3	3.6
** WBS: 1.2.1.2.3.1.10	Titanium Sublimation Pump												
1	TSP pump spool piece	ea	1	2700.00	A91	2.7	0	0.0	0		0.00	0.0	2.7
2	TSP filaments&controller	ea	1	3500.00	eu	3.5	1	8.0	8	EI	33.00	0.3	3.8
3	Flanges,& UHV hardware	lot	1	500.00	eu	0.5	0	0.0	0		0.00	0.0	0.5
4	Support post, misc hardwr	lot	1	1500.00	eu	1.5	1	20.0	20	MS	37.73	0.8	2.3
5	Struts & hardware	ea	6	500.00	A91	3.0	6	8.0	48	MU	35.92	1.7	4.7
6	Misc extrusns, mounts,etc	lot	1	1000.00	eu	1.0	1	20.0	20	MS	37.73	0.8	1.8

Technical Components Cost Estimate

ITM NBR	ITM DESCRIPTION	UNIT MEAS	NBR UNITS	UNIT COST COST	BASIS	TOTAL ISC K$	LBR UNTS	HRS/ UNIT	TOTAL HRS	CRAFT CODE	CRAFT RATE	TOTAL LABOR K$	ISC + LABOR K$
** Subtotal **						12.2			96			3.5	15.7
** WBS: 1.2.1.2.3.1.11	Isolation Valve												
1	Valve & contrllr proc.	ea	1	15000.00	vq	15.0	0	0.0	0		0.00	0.0	15.0
2	Prelim assembl & test	ea	1	50.00	eu	0.1	1	8.0	8	MU	35.92	0.3	0.3
3	Inspection,cleaning,etc.	lot	1	50.00	eu	0.1	1	4.0	4	MU	35.92	0.1	0.2
4	Cables & connectors	lot	1	200.00	eu	0.2	1	2.0	2	EI	33.00	0.1	0.3
5	Blank flanges & hardware	lot	2	200.00	eu	0.4	0	0.0	0		0.00	0.0	0.4
** Subtotal **						15.7			14			0.5	16.2
** WBS: 1.2.1.2.3.2.1	Fab/Buy Mech Parts & Subassy's												
1	Mirror polishing	ea	1	20300.00	A91	20.3	0	0.0	0		0.00	0.0	20.3
2	Optical coating	ea	1	1000.00	A88	1.0	0	0.0	0		0.00	0.0	1.0
3	Substrate parts machining	lot	1	3000.00	A91	3.0	0	0.0	0		0.00	0.0	3.0
4	Substrate brzng/leak chk	ea	1	200.00	eu	0.2	1	20.0	20	MU	35.92	0.7	0.9
5	Braze & leak chk fixtures	ea	1	200.00	A91	0.2	1	40.0	40	MU	35.92	1.4	1.6
6	UHV mirrr in-vac mounting	ea	1	1000.00	eu	1.0	1	120.0	120	MS	37.73	4.5	5.5
7	Mirror positioning mech	ea	1	1000.00	eu	1.0	1	80.0	80	MS	37.73	3.0	4.0
8	Mirror shippng crate/mnt	ea	1	800.00	A91	0.8	0	32.0	0	MS	37.73	0.0	0.8
9	Misc UHV flanges/hardware	lot	1	1000.00	eu	1.0	0	0.0	0		0.00	0.0	1.0
10	Bellows/conflat ass'y	ea	1	2500.00	A91	2.5	0	0.0	0		0.00	0.0	2.5
11	Tube/joystick ass'y	ea	1	200.00	A86	0.2	1	60.0	60	MS	37.73	2.3	2.5
12	Masks: parts & machining	ea	4	3000.00	A91	12.0	0	0.0	0		0.00	0.0	12.0
13	Masks:Braze & weld assy	ea	4	200.00	A91	0.8	4	40.0	160	MU	35.92	5.7	6.5
14	Lead shielding	ea	1	500.00	eu	0.5	1	40.0	40	MU	35.92	1.4	1.9
** Subtotal **						44.5			520			19.1	63.6
** WBS: 1.2.1.2.3.2.2	Fab/Buy Electrical and Controls												
1	Stepper/encoder/limits	ea	3	2500.00	eu	7.5	3	20.0	60	MS	37.73	2.3	9.8
2	Driver/encoder cables	ea	3	200.00	eu	0.6	3	16.0	48	EI	33.00	1.6	2.2
3	Flow switch & interlocks	ea	1	400.00	eu	0.4	1	4.0	4	EI	33.00	0.1	0.5
4	Module, VME, RS232,B-port	ea	1	800.00	eu	0.8	1	16.0	16	EI	33.00	0.5	1.3
5	Cable, RS232	ea	3	50.00	eu	0.1	0	0.0	0		0.00	0.0	0.1
6	Glow discharg optcl clean	ea	1	10000.00	eu	10.0	1	40.0	40	EI	33.00	1.3	11.3
** Subtotal **						19.5			168			5.8	25.3
** WBS: 1.2.1.2.3.2.3	Fab/Buy Vacuum Chamber & Supports												
1	Custom vacuum chamber	ea	1	10000.00	A91	10.0	0	0.0	0		0.00	0.0	10.0
2	Downstream mask chamber	ea	1	2500.00	cp	2.5	0	0.0	0		0.00	0.0	2.5
3	Misc. flanges/UHV hardwre	lot	1	1000.00	eu	1.0	0	0.0	0		0.00	0.0	1.0
4	Roughing valve	ea	2	650.00	cp	1.3	0	0.0	0		0.00	0.0	1.3
5	Mounting struts/hardware	ea	2	500.00	A91	1.0	2	8.0	16	MS	37.73	0.6	1.6
6	Motorized struts/hardware	ea	4	1000.00	eu	4.0	4	16.0	64	MS	37.73	2.4	6.4
7	Support posts	ea	1	1500.00	A91	1.5	1	40.0	40	MS	37.73	1.5	3.0
8	Pump welded bellws assy	ea	1	4000.00	A91	4.0	0	0.0	0		0.00	0.0	4.0
9	Bellws inspect/clean/bake	ea	1	50.00	eu	0.1	1	4.0	4	MU	35.92	0.1	0.2
** Subtotal **						25.4			124			4.7	30.0
** WBS: 1.2.1.2.3.2.4	Vacuum Pumping, Gauges, Controllers, P.S.												
1	Ion pump, 400 l/s	ea	1	7500.00	A91	7.5	1	8.0	8	MU	35.92	0.3	7.8
2	Ion pump controller	ea	1	2500.00	A91	2.5	1	8.0	8	EI	33.00	0.3	2.8
3	Ion pump cable,bakeable	ea	1	250.00	A91	0.2	0	0.0	0		0.00	0.0	0.2
4	IEEE-48 cable,3m cntrller	ea	1	150.00	cp	0.1	0	0.0	0		0.00	0.0	0.1
5	Ion gauge & controls	ea	1	3500.00	A91	3.5	1	8.0	8	MU	35.92	0.3	3.8
6	Ion gauge cable, bakeable	ea	1	250.00	cp	0.2	1	8.0	8	EI	33.00	0.3	0.5
7	Junction box,IG cable	ea	1	250.00	eu	0.2	0	0.0	0		0.00	0.0	0.2
8	Interlock cable	ea	1	100.00	eu	0.1	0	0.0	0		0.00	0.0	0.1
** Subtotal **						14.5			32			1.1	15.6

Technical Components Cost Estimate

ITM NBR	ITM DESCRIPTION	UNIT MEAS	NBR UNITS	UNIT COST	COST BASIS	TOTAL ISC K$	LBR UNTS	HRS/ UNIT	TOTAL HRS	CRAFT CODE	CRAFT RATE	TOTAL LABOR K$	ISC LABOR K$
** WBS: 1.2.1.2.3.2.5	Assemble, Bakeout, Test												
1	Assemble & test	ea	1	500.00	eu	0.5	1	120.0	120	MS	37.73	4.5	5.0
2	Bakeout & UHV qualify	lot	1	500.00	eu	0.5	1	120.0	120	MU	35.92	4.3	4.8
3	Survey/calibration		0	0.00		0.0	2	16.0	32	MU	35.92	1.1	1.1
4	Misc tools/fixtrs/cart	ea	1	1000.00	eu	1.0	1	80.0	80	MS	37.73	3.0	4.0
** Subtotal **						2.0			352			13.0	15.0
** WBS: 1.2.1.2.3.2.6	Installation												
1	LCW hardware/connections	lot	1	300.00	eu	0.3	1	16.0	16	MU	35.92	0.6	0.9
2	Transport/on-site setup	lot	1	200.00	eu	0.2	2	16.0	32	MU	35.92	1.1	1.3
3	Vac assemble & leak check	lot	1	50.00	eu	0.1	1	20.0	20	MU	35.92	0.7	0.8
4	Installation alignment		0	0.00		0.0	2	32.0	64	MU	35.92	2.3	2.3
5	Mech install/test/debug	lot	1	500.00	eu	0.5	2	40.0	80	MU	35.92	2.9	3.4
6	Elec installation		0	0.00		0.0	1	20.0	20	IEL	62.85	1.3	1.3
** Subtotal **						1.1			232			8.9	9.9
** WBS: 1.2.1.2.3.2.7	Bellows												
1	Welded bellows assy	ea	1	4000.00	A91	4.0	0	0.0	0		0.00	0.0	4.0
2	Blank flnges,gskts,etc	lot	2	300.00	cp	0.6	0	0.0	0		0.00	0.0	0.6
3	Inspct,clean,prelim bake	ea	2	50.00	eu	0.1	2	4.0	8	MU	35.92	0.3	0.4
** Subtotal **						4.7			8			0.3	5.0
** WBS: 1.2.1.2.3.2.8	Collimating Spool												
1	Spool piece	ea	1	2000.00	A91	2.0	1	8.0	8	MU	35.92	0.3	2.3
2	Misc flanges & UHV hrdwre	ea	1	500.00	eu	0.5	1	8.0	8	MS	37.73	0.3	0.8
3	Lead shielding/mounting	ea	1	500.00	eu	0.5	1	40.0	40	MS	37.73	1.5	2.0
** Subtotal **						3.0			56			2.1	5.1
** WBS: 1.2.1.2.3.2.9	Isolation Valve												
1	Valve & contrllr proc.	ea	1	15000.00	A91	15.0	1	8.0	8	MU	35.92	0.3	15.3
2	Prelim assmble & test	ea	1	50.00	eu	0.1	1	4.0	4	MU	35.92	0.1	0.2
3	Inspect,clean, etc	ea	1	50.00	eu	0.1	1	4.0	4	MU	35.92	0.1	0.2
4	Cables & connectors	lot	1	200.00	eu	0.2	1	2.0	2	EI	33.00	0.1	0.3
5	Blank flanges & hardware	lot	2	200.00	eu	0.4	0	0.0	0		0.00	0.0	0.4
** Subtotal **						15.7			18			0.6	16.3
** WBS: 1.2.1.2.3.3.1	Fab/Buy Mech Parts & Subassy's												
1	Mirror polishing	ea	1	20300.00	A91	20.3	0	0.0	0		0.00	0.0	20.3
2	Optical coating	ea	1	1000.00	A88	1.0	0	0.0	0		0.00	0.0	1.0
3	Substrate parts machining	lot	1	3000.00	A91	3.0	0	0.0	0		0.00	0.0	3.0
4	Substrate brzng/leak chk	ea	1	200.00	eu	0.2	1	40.0	40	MU	35.92	1.4	1.6
5	Braze & leak chk fixtures	ea	1	200.00	A91	0.2	1	40.0	40	MU	35.92	1.4	1.6
6	UHV mirrr in-vac mounting	ea	1	1000.00	eu	1.0	1	120.0	120	MS	37.73	4.5	5.5
7	Mirror positioning mech	ea	1	1000.00	eu	1.0	1	80.0	80	MS	37.73	3.0	4.0
8	Mirror shippng crate/mnt	ea	1	800.00	A91	0.8	1	32.0	32	MS	37.73	1.2	2.0
9	Misc UHV flanges/hardware	lot	1	1000.00	eu	1.0	0	0.0	0		0.00	0.0	1.0
10	Bellows/conflat ass'y	ea	1	2500.00	A91	2.5	0	0.0	0		0.00	0.0	2.5
11	Tube/joystick ass'y	ea	1	200.00	A86	0.2	1	60.0	60	MS	37.73	2.3	2.5
12	Masks: parts & machining	ea	4	3000.00	A91	12.0	0	0.0	0		0.00	0.0	12.0
13	Masks:Braze & weld assy	ea	4	200.00	A91	0.8	4	40.0	160	MU	35.92	5.7	6.5
14	Lead shielding	ea	1	500.00	eu	0.5	1	40.0	40	MU	35.92	1.4	1.9
** Subtotal **						44.5			572			21.1	65.6
** WBS: 1.2.1.2.3.3.2	Fab/Buy Electrical and Controls												
1	Stepper/encoder/limits	ea	3	2500.00	eu	7.5	3	20.0	60	MS	37.73	2.3	9.8
2	Driver/encoder cables	ea	3	200.00	eu	0.6	3	16.0	48	EI	33.00	1.6	2.2
3	Flow switch & interlocks	ea	1	400.00	eu	0.4	1	4.0	4	EI	33.00	0.1	0.5
4	Module, VME, RS232,B-port	ea	1	800.00	eu	0.8	1	16.0	16	EI	33.00	0.5	1.3
5	Cable, RS232	ea	3	50.00	eu	0.1	0	0.0	0		0.00	0.0	0.1
6	Glow discharg optcl clean	ea	1	10000.00	eu	10.0	1	40.0	40	EI	33.00	1.3	11.3

Technical Components Cost Estimate

ITM NBR	ITM DESCRIPTION	UNIT MEAS	NBR UNITS	UNIT COST	COST BASIS	TOTAL ISC K$	LBR UNTS	HRS/ UNIT	TOTAL HRS	CRAFT CODE	CRAFT RATE	TOTAL LABOR K$	ISC + LABOR K$
** Subtotal **						19.5			168			5.8	25.3
** WBS: 1.2.1.2.3.3.3	Fab/Buy Vacuum Chamber & Supports												
1	Custom vacuum chamber	ea	1	10000.00	A91	10.0	0	0.0	0		0.00	0.0	10.0
3	Misc. flanges/UHV hardwre	lot	1	1000.00	eu	1.0	0	0.0	0		0.00	0.0	1.0
4	Roughing valve	ea	2	650.00	cp	1.3	0	0.0	0		0.00	0.0	1.3
5	Mounting struts/hardware	ea	3	500.00	A91	1.5	3	8.0	24	MS	37.73	0.9	2.4
6	Motorized struts/hardware	ea	3	1000.00	eu	3.0	3	16.0	48	MS	37.73	1.8	4.8
7	Support posts	ea	1	1500.00	A91	1.5	1	40.0	40	MS	37.73	1.5	3.0
8	Pump welded bellws assy	ea	1	4000.00	A91	4.0	0	0.0	0		0.00	0.0	4.0
9	Bellws inspect/clean/bake	ea	1	50.00	eu	0.1	1	4.0	4	MU	35.92	0.1	0.2
** Subtotal **						22.4			116			4.4	26.7
** WBS: 1.2.1.2.3.3.4	Vacuum Pumping, Gauges, Controllers, P.S.												
1	Ion pump, 400 l/s	ea	1	7500.00	A91	7.5	1	8.0	8	MU	35.92	0.3	7.8
2	Ion pump controller	ea	1	2500.00	A91	2.5	1	8.0	8	EI	33.00	0.3	2.8
3	Ion pump cable,bakeable	ea	1	250.00	A91	0.2	0	0.0	0		0.00	0.0	0.2
4	IEEE-48 cable,3m cntrller	ea	1	150.00	cp	0.1	0	0.0	0		0.00	0.0	0.1
5	Ion gauge & controls	ea	1	3500.00	A91	3.5	1	8.0	8	MU	35.92	0.3	3.8
6	Ion gauge cable, bakeable	ea	1	250.00	cp	0.2	1	8.0	8	EI	33.00	0.3	0.5
7	Junction box,IG cable	ea	1	200.00	eu	0.2	0	0.0	0		0.00	0.0	0.2
8	Interlock cable	ea	1	100.00	eu	0.1	0	0.0	0		0.00	0.0	0.1
9	LCW 0.1deg temp cntrllr	ea	1	2000.00	eu	2.0	0	0.0	0		0.00	0.0	2.0
** Subtotal **						16.4			32			1.1	17.6
** WBS: 1.2.1.2.3.3.5	Assemble, Bakeout, Test												
1	Assemble & test	ea	1	500.00	eu	0.5	1	120.0	120	MS	37.73	4.5	5.0
2	Bakeout & UHV qualify	lot	1	500.00	eu	0.5	1	120.0	120	MU	35.92	4.3	4.8
3	Survey/calibration		0	0.00		0.0	2	16.0	32	MU	35.92	1.1	1.1
4	Misc tools/fixtrs/cart	ea	1	1000.00	eu	1.0	1	80.0	80	MS	37.73	3.0	4.0
** Subtotal **						2.0			352			13.0	15.0
** WBS: 1.2.1.2.3.3.6	Installation												
1	LCW hardware/connections	lot	1	300.00	eu	0.3	1	16.0	16	MU	35.92	0.6	0.9
2	Transport/on-site setup	lot	1	200.00	eu	0.2	2	16.0	32	MU	35.92	1.1	1.3
3	Vac assemble & leak check	lot	1	50.00	eu	0.1	1	20.0	20	MU	35.92	0.7	0.8
4	Installation alignment		0	0.00		0.0	2	32.0	64	MU	35.92	2.3	2.3
5	Mech install/test/debug	lot	1	500.00	eu	0.5	2	40.0	80	MU	35.92	2.9	3.4
6	Elec installation		0	0.00		0.0	1	20.0	20	IEL	62.85	1.3	1.3
** Subtotal **						1.1			232			8.9	9.9
** WBS: 1.2.1.2.3.3.7	Bellows												
1	Welded bellows assy	ea	2	4000.00	A91	8.0	0	0.0	0		0.00	0.0	8.0
2	Blank flnges,gskts,etc	lot	2	300.00	cp	0.6	0	0.0	0		0.00	0.0	0.6
3	Inspct,clean,prelim bake	ea	2	50.00	eu	0.1	2	4.0	8	MU	35.92	0.3	0.4
** Subtotal **						8.7			8			0.3	9.0
** WBS: 1.2.1.2.3.3.8	Collimating Spool												
1	Spool piece	ea	1	1000.00	A91	1.0	1	8.0	8	MU	35.92	0.3	1.3
2	Supprt post&mountng hrdwr	ea	1	1000.00	eu	1.0	1	20.0	20	MS	37.73	0.8	1.8
** Subtotal **						2.0			28			1.0	3.0
** WBS: 1.2.1.2.3.3.9	Isolation Valve												
1	Valve & contrllr proc.	ea	1	15000.00	A91	15.0	1	8.0	8	MU	35.92	0.3	15.3
2	Prelim assmble & test	ea	1	50.00	eu	0.1	1	4.0	4	MU	35.92	0.1	0.2
3	Inspect,clean, etc	ea	1	50.00	eu	0.1	1	4.0	4	MU	35.92	0.1	0.2
4	Cables & connectors	lot	1	200.00	eu	0.2	1	2.0	2	EI	33.00	0.1	0.3
5	Blank flanges & hardware	lot	2	200.00	eu	0.4	0	0.0	0		0.00	0.0	0.4

Technical Components Cost Estimate

ITM NBR	ITM DESCRIPTION	UNIT MEAS	NBR UNITS	UNIT COST	COST BASIS	TOTAL ISC K$	LBR UNTS	HRS/ UNIT	TOTAL HRS	CRAFT CODE	CRAFT RATE	TOTAL LABOR K$	ISC LABOR K$
** Subtotal **						15.7			18			0.6	16.3
** WBS: 1.2.1.2.3.5.1.1	Bellows												
1	Welded bellows assy	ea	2	2500.00	A91	5.0	2	4.0	8	MS	37.73	0.3	5.3
2	Blank flanges,gaskets,etc	lot	2	300.00	cp	0.6	0	0.0	0		0.00	0.0	0.6
3	Inspection,cleaning,bake	ea	2	50.00	eu	0.1	2	4.0	8	MU	35.92	0.3	0.4
** Subtotal **						5.7			16			0.6	6.3
** WBS: 1.2.1.2.3.5.1.2	Slit Mechanical Assembly												
1	Flanges & flexure plate	ea	1	1000.00	eu	1.0	1	80.0	80	MS	37.73	3.0	4.0
2	Cf feedthrus for elctncs	ea	4	200.00	eu	0.8	0	0.0	0		0.00	0.0	0.8
3	Viewports & mirrors	ea	2	200.00	eu	0.4	2	8.0	16	MS	37.73	0.6	1.0
4	Brazing & fixtures	ea	1	100.00	eu	0.1	1	20.0	20	MU	35.92	0.7	0.8
5	Feedthrus - welding	ea	1	50.00	eu	0.1	1	8.0	8	MS	37.73	0.3	0.4
6	Blades fab/buy	ea	2	5000.00	eu	10.0	0	0.0	0		0.00	0.0	10.0
7	LCW hardware	ea	1	100.00	eu	0.1	1	8.0	8	MU	35.92	0.3	0.4
8	Micrometer mech	ea	1	1000.00	eu	1.0	1	20.0	20	MS	37.73	0.8	1.8
9	Outside vac mntng hrdware	lot	1	500.00	eu6	0.5	1	20.0	20	MS	37.73	0.8	1.3
10	Blade alignment fixtures	lot	1	200.00	eu	0.2	1	20.0	20	MS	37.73	0.8	1.0
** Subtotal **						14.1			192			7.2	21.3
** WBS: 1.2.1.2.3.5.1.3	Support Systems												
1	Slit assy mntng hardwre	ea	6	1000.00	eu	6.0	6	8.0	48	MS	37.73	1.8	7.8
2	Support post & hardware	ea	1	500.00	eu	0.5	1	40.0	40	MS	37.73	1.5	2.0
3	Struts & mntng hardwre	ea	6	500.00	eu	3.0	6	8.0	48	MS	37.73	1.8	4.8
4	Support post & hardware	ea	1	300.00	eu	0.3	1	20.0	20	MS	37.73	0.8	1.1
** Subtotal **						9.8			156			5.9	15.7
** WBS: 1.2.1.2.3.5.1.4	Spools												
1	Diagnostic spool piece	ea	1	2000.00	eu	2.0	0	0.0	0		0.00	0.0	2.0
2	Collmtng spool piece	ea	1	1250.00	A91	1.2	1	8.0	8	MU	35.92	0.3	1.5
3	Misc flanges & UHV hardwr	lot	1	500.00	eu	0.5	0	0.0	0		0.00	0.0	0.5
4	Lead shielding & mounting	ea	1	500.00	eu	0.5	1	40.0	40	MS	37.73	1.5	2.0
** Subtotal **						4.2			48			1.8	6.0
** WBS: 1.2.1.2.3.5.1.5	Vacuum System												
1	Ion pump 120 l/s	ea	1	4000.00	A91	4.0	1	4.0	4	MU	35.92	0.1	4.1
2	Ion pump controller	ea	1	1600.00	A91	1.6	1	4.0	4	EI	33.00	0.1	1.7
3	Ion pump cable, bakeable	ea	1	250.00	cp	0.2	0	0.0	0		0.00	0.0	0.2
4	IEEE-48 cable, 3m cntrllr	ea	1	150.00	cp	0.1	0	0.0	0		0.00	0.0	0.1
5	Roughing valve	ea	2	650.00	A91	1.3	0	0.0	0		0.00	0.0	1.3
6	Ion gauge & controls	ea	1	3500.00	A91	3.5	1	4.0	4	MU	35.92	0.1	3.6
7	Ion gauge cable, bakeable	ea	1	250.00	cp	0.2	1	4.0	4	EI	33.00	0.1	0.4
8	Junction box, IG cable	ea	1	200.00	eu	0.2	1	4.0	4	EI	33.00	0.1	0.3
9	Interlock cable	ea	1	100.00	eu	0.1	0	0.0	0		0.00	0.0	0.1
** Subtotal **						11.3			20			0.7	12.0
** WBS: 1.2.1.2.3.5.1.6	Isolation Valve												
1	Valve & controller proc	ea	1	10000.00	vq	10.0	0	0.0	0		0.00	0.0	10.0
2	Prelim assemble & test	ea	1	50.00	eu	0.1	1	8.0	8	MU	35.92	0.3	0.3
3	Inspect,clean,etc	ea	1	50.00	eu	0.1	1	4.0	4	MU	35.92	0.1	0.2
4	Cables & connectors	ea	1	200.00	eu	0.2	1	2.0	2	EI	33.00	0.1	0.3
5	Blank flanges & hardware	lot	2	200.00	eu	0.4	0	0.0	0		0.00	0.0	0.4
** Subtotal **						10.7			14			0.5	11.2
** WBS: 1.2.1.2.3.5.1.7	Assemble and Test												
1	Assemble & test	ea	1	500.00	eu	0.5	2	40.0	80	MU	35.92	2.9	3.4
2	Bakeout & UHV qualify	ea	1	500.00	eu	0.5	2	40.0	80	MU	35.92	2.9	3.4
3	Survey & calibrate		0	0.00		0.0	2	16.0	32	MU	35.92	1.1	1.1

Technical Components Cost Estimate

ITM NBR	ITM DESCRIPTION	UNIT MEAS	NBR UNITS	UNIT COST	COST BASIS	TOTAL ISC K$	LBR UNTS	HRS/ UNIT	TOTAL HRS	CRAFT CODE	CRAFT RATE	TOTAL LABOR K$	ISC + LABOR K$
4	Misc tools, fixtures,cart	lot	1	500.00	eu8	0.5	1	40.0	40	MS	37.73	1.5	2.0
** Subtotal **						1.5			232			8.4	9.9
** WBS: 1.2.1.2.3.5.1.8	Install and Align												
1	LCW hardware & cnnections	lot	1	300.00	eu8	0.3	1	16.0	16	MU	35.92	0.6	0.9
2	Transport & onsite setup	ea	1	200.00	eu	0.2	2	16.0	32	MU	35.92	1.1	1.3
3	Vac assmble & leak check	ea	1	50.00	eu8	0.1	2	20.0	40	MU	35.92	1.4	1.5
4	Installation alignment		0	0.00		0.0	2	32.0	64	MU	35.92	2.3	2.3
5	Mech install/test/debug	lot	1	500.00	eu	0.5	2	20.0	40	MU	35.92	1.4	1.9
6	Elec installation		0	0.00		0.0	1	20.0	20	IEL	62.85	1.3	1.3
** Subtotal **						1.1			212			8.2	9.2
** WBS: 1.2.1.2.3.5.2.1	Bellows												
1	Welded bellows assy	ea	2	2500.00	A91	5.0	2	4.0	8	MS	37.73	0.3	5.3
2	Blank flanges & gaskets	lot	2	300.00	cp	0.6	0	0.0	0		0.00	0.0	0.6
3	Inspect,clean,bakeout	ea	2	50.00	eu	0.1	2	4.0	8	MU	35.92	0.3	0.4
** Subtotal **						5.7			16			0.6	6.3
** WBS: 1.2.1.2.3.5.2.2	Gratings												
1	Brazed substrate parts	ea	3	3500.00	A91	10.5	0	0.0	0		0.00	0.0	10.5
2	Substrate brazing,welding	ea	3	200.00	A91	0.6	3	20.0	60	MU	35.92	2.2	2.8
3	Misc leak & flow tests	ea	3	100.00	A91	0.3	3	8.0	24	MU	35.92	0.9	1.2
4	Polishing	ea	3	20000.00	A91	60.0	0	0.0	0		0.00	0.0	60.0
5	Ruling	ea	3	15000.00	eu	45.0	0	0.0	0		0.00	0.0	45.0
6	Optical coatings	ea	3	1000.00	eu	3.0	0	0.0	0		0.00	0.0	3.0
7	Shipping & handling	ea	3	200.00	eu	0.6	4	4.0	16	MU	35.92	0.6	1.2
** Subtotal **						120.0			100			3.6	123.6
** WBS: 1.2.1.2.3.5.2.3	Grating Mechanical Assembly												
1	Invac mounting hardware	ea	1	20000.00	eu	20.0	1	800.0	800	MS	37.73	30.2	50.2
2	Scan drive mechanism	ea	1	5000.00	eu	5.0	1	200.0	200	MS	37.73	7.5	12.5
3	Slide	ea	1	20000.00	A87	20.0	0	0.0	0		0.00	0.0	20.0
4	Grating intrchnge actuatr	ea	1	2000.00	A87	2.0	1	80.0	80	MS	37.73	3.0	5.0
5	Alignmnt manipulator	ea	1	2000.00	A87	2.0	1	80.0	80	MS	37.73	3.0	5.0
** Subtotal **						49.0			1160			43.8	92.8
** WBS: 1.2.1.2.3.5.2.4	Mask & VBDA												
1	Blade mechanism	ea	2	1000.00	eu	2.0	2	80.0	160	MS	37.73	6.0	8.0
2	Vacuum housing	ea	1	2000.00	eu	2.0	0	0.0	0		0.00	0.0	2.0
3	Manual actuator/micometer	ea	2	1500.00	eu	3.0	2	20.0	40	MS	37.73	1.5	4.5
4	LCW hardware	ea	1	500.00	cp	0.5	1	20.0	20	MS	37.73	0.8	1.3
5	Misc parts & tools	lot	1	1000.00	eu	1.0	1	40.0	40	MS	37.73	1.5	2.5
** Subtotal **						8.5			260			9.8	18.3
** WBS: 1.2.1.2.3.5.2.5	Electrical & Controls												
1	Scan drive electronics	ea	1	40000.00	A87	40.0	0	0.0	0		0.00	0.0	40.0
2	Interferometer positionng	ea	1	25000.00	A87	25.0	0	0.0	0		0.00	0.0	25.0
3	Glow dschrge optcl cleang	ea	1	10000.00	eu	10.0	1	16.0	16	EI	33.00	0.5	10.5
** Subtotal **						75.0			16			0.5	75.5
** WBS: 1.2.1.2.3.5.2.6	Vacuum System												
1	Ion pump 400 l/s	ea	1	7500.00	A91	7.5	1	4.0	4	MU	35.92	0.1	7.6
2	Ion pump heater	ea	1	1000.00	A91	1.0	1	4.0	4	EI	33.00	0.1	1.1
3	Ion pump controller	ea	1	2500.00	A91	2.5	1	4.0	4	EI	33.00	0.1	2.6
4	Ion pump cable,bakeable	ea	1	250.00	A91	0.2	0	0.0	0		0.00	0.0	0.2
5	IEEE-48 cable, 3 meter	ea	1	150.00	cp	0.1	0	0.0	0		0.00	0.0	0.1
6	Roughing valve	ea	2	650.00	A91	1.3	0	0.0	0		0.00	0.0	1.3
7	Ion gauge & controls	ea	1	3500.00	A91	3.5	1	4.0	4	MU	35.92	0.1	3.6
8	Ion gauge cable,bakeable	ea	1	250.00	cp	0.2	1	4.0	4	EI	33.00	0.1	0.4

Technical Components Cost Estimate

ITM NBR	ITM DESCRIPTION	UNIT MEAS	NBR UNITS	UNIT COST	COST BASIS	TOTAL ISC K$	LBR UNTS	HRS/ UNIT	TOTAL HRS	CRAFT CODE	CRAFT RATE	TOTAL LABOR K$	ISC + LABOR K$
9	Junction box, IG cable	ea	1	200.00	eu	0.2	1	4.0	4	EI	33.00	0.1	0.3
10	Interlock cable	ea	1	100.00	eu	0.1	0	0.0	0		0.00	0.0	0.1
11	TSP pump spool piece	ea	1	3000.00	A91	3.0	0	0.0	0		0.00	0.0	3.0
12	TSP filaments/controller	ea	1	3500.00	eu	3.5	1	8.0	8	EI	33.00	0.3	3.8
13	Flanges & UHV hardware	lot	1	500.00	eu	0.5	0	0.0	0		0.00	0.0	0.5
14	Support stand misc hardwr	ea	1	500.00	eu	0.5	1	20.0	20	MS	37.73	0.8	1.3
15	Pump welded bellws assy	ea	1	2500.00	A91	2.5	0	0.0	0		0.00	0.0	2.5
16	Bellows inspect,clean,bak	ea	1	50.00	eu	0.1	1	4.0	4	MU	35.92	0.1	0.2
17	Misc extrusions,mounting	lot	1	1000.00	eu	1.0	1	20.0	20	MS	37.73	0.8	1.8
** Subtotal **						27.8			76			2.7	30.5
** WBS: 1.2.1.2.3.5.2.7	Support Systems												
1	Grating chamber	ea	1	40000.00	A88	40.0	1	800.0	800	MS	37.73	30.2	70.2
2	Struts & mounting hardwre	ea	6	1000.00	eu	6.0	6	8.0	48	MS	37.73	1.8	7.8
3	Support stand & hardware	ea	1	2000.00	eu	2.0	1	80.0	80	MS	37.73	3.0	5.0
4	Misc blank-off flanges	lot	8	500.00	cp	4.0	0	0.0	0		0.00	0.0	4.0
5	Misc UHV tools,parts,etc	lot	1	2500.00	eu	2.5	1	40.0	40	MS	37.73	1.5	4.0
** Subtotal **						54.5			968			36.5	91.0
** WBS: 1.2.1.2.3.5.2.8	Assemble & Test												
1	Assemble grating BDA	ea	1	500.00	eu	0.5	2	80.0	160	MS	37.73	6.0	6.5
2	Assemble grating mounting	ea	1	500.00	A88	0.5	2	80.0	160	MS	37.73	6.0	6.5
3	Assemble drive mechanism	ea	1	500.00	A88	0.5	2	80.0	160	MS	37.73	6.0	6.5
4	Assemble grating chamber	ea	1	500.00	A88	0.5	2	80.0	160	MS	37.73	6.0	6.5
5	Bakeout & UHV qualify	ea	1	500.00	eu	0.5	2	80.0	160	MU	35.92	5.7	6.2
6	Survey/calibration		0	0.00		0.0	2	16.0	32	MU	35.92	1.1	1.1
7	Misc tools,fixtures,cart	lot	1	1000.00	eu	1.0	1	40.0	40	MS	37.73	1.5	2.5
** Subtotal **						3.5			872			32.6	36.1
** WBS: 1.2.1.2.3.5.2.9	Install & Align												
1	LCW hardware & connctions	ea	1	300.00	eu	0.3	1	16.0	16	MU	35.92	0.6	0.9
2	Transport & onsite setup	ea	1	500.00	eu	0.5	2	40.0	80	MU	35.92	2.9	3.4
3	Vac assemble & leakcheck	ea	1	50.00	eu	0.1	2	40.0	80	MU	35.92	2.9	2.9
4	Installation alignment		0	0.00		0.0	2	40.0	80	MU	35.92	2.9	2.9
5	Mech install,test,debug	ea	1	500.00	eu	0.5	2	40.0	80	MU	35.92	2.9	3.4
6	Electrical installation		0	0.00		0.0	1	40.0	40	IEL	62.85	2.5	2.5
** Subtotal **						1.4			376			14.6	15.9
** WBS: 1.2.1.2.3.5.3.1	Bellows												
1	Welded bellows assy	ea	2	8000.00	A86	16.0	2	4.0	8	MS	37.73	0.3	16.3
2	Inspection,cleaning,bake	ea	2	50.00	eu	0.1	2	4.0	8	MU	35.92	0.3	0.4
3	Anti-sag supports	ea	2	1000.00	eu	2.0	2	60.0	120	MS	37.73	4.5	6.5
** Subtotal **						18.1			136			5.1	23.2
** WBS: 1.2.1.2.3.5.3.2	Isolation Valves												
1	Valve & controller proc.	ea	2	10000.00	vq	20.0	0	0.0	0		0.00	0.0	20.0
2	Prelim assemble & test	lot	2	50.00	eu	0.1	2	8.0	16	MU	35.92	0.6	0.7
3	Inspection, clean,bake	lot	2	50.00	eu	0.1	2	4.0	8	MU	35.92	0.3	0.4
4	Cables & connectors	lot	2	200.00	eu	0.4	2	2.0	4	EI	33.00	0.1	0.5
5	Blank flanges & hardware	lot	4	200.00	eu	0.8	0	0.0	0		0.00	0.0	0.8
** Subtotal **						21.4			28			1.0	22.4
** WBS: 1.2.1.2.3.5.3.3	Vacuum System												
1	Ion pump 60 l/s	ea	1	2700.00	A91	2.7	1	4.0	4	MU	35.92	0.1	2.8
2	Ion pump controller	ea	1	1600.00	A91	1.6	1	4.0	4	EI	33.00	0.1	1.7
3	Ion pump cable,bakeable	ea	1	250.00	A91	0.2	0	0.0	0		0.00	0.0	0.2
4	IEEE-48 cable, 3 m	ea	1	150.00	cp	0.1	0	0.0	0		0.00	0.0	0.1
5	Roughing valve	ea	2	650.00	A91	1.3	0	0.0	0		0.00	0.0	1.3
6	Ion gauge & controls	ea	1	3500.00	A91	3.5	1	4.0	4	MU	35.92	0.1	3.6
7	Ion gauge cable, bakeable	ea	1	250.00	cp	0.2	1	4.0	4	EI	33.00	0.1	0.4

Technical Components Cost Estimate

ITM NBR	ITM DESCRIPTION	UNIT MEAS	NBR UNITS	UNIT COST	COST BASIS	TOTAL ISC K$	LBR UNTS	HRS/ UNIT	TOTAL HRS	CRAFT CODE	CRAFT RATE	TOTAL LABOR K$	ISC + LABOR K$
8	Junction box, IG cable	ea	1	200.00	eu	0.2	1	4.0	4	EI	33.00	0.1	0.3
9	Interlock cable	ea	1	100.00	eu	0.1	0	0.0	0		0.00	0.0	0.1
10	Spool pieces	ea	3	2000.00	eu	6.0	0	0.0	0		0.00	0.0	6.0
** Subtotal **						16.0			20			0.7	16.7
** WBS: 1.2.1.2.3.5.3.4	Slit Mechanical Assembly												
1	Flanges & flexure plate	ea	1	1000.00	eu	1.0	1	80.0	80	MS	37.73	3.0	4.0
2	CF feed-thrus for elctncs	ea	4	200.00	eu	0.8	0	0.0	0		0.00	0.0	0.8
3	Viewports & mirrors	ea	2	200.00	eu	0.4	2	8.0	16	MS	37.73	0.6	1.0
4	Brazing & fixtures	ea	1	100.00	eu	0.1	1	20.0	20	MU	35.92	0.7	0.8
5	Feedthrus welding	ea	1	50.00	eu	0.1	1	8.0	8	MS	37.73	0.3	0.4
6	Blades fab/buy	ea	2	200.00	eu	0.4	2	20.0	40	MS	37.73	1.5	1.9
8	LCW hardware	ea	1	100.00	eu	0.1	1	8.0	8	MU	35.92	0.3	0.4
9	Micrometer mechanism	ea	1	1000.00	eu	1.0	1	20.0	20	MS	37.73	0.8	1.8
10	Outside vac mnting hardwr	ea	1	500.00	eu	0.5	1	20.0	20	MS	37.73	0.8	1.3
11	Blade alignment fixtures	lot	1	200.00	eu	0.2	1	20.0	20	MS	37.73	0.8	1.0
12	Exit slit motion system	ea	1	60000.00	A87	60.0	0	0.0	0		0.00	0.0	60.0
** Subtotal **						64.5			232			8.7	73.3
** WBS: 1.2.1.2.3.5.3.5	Support Systems												
1	Slit assy mounting hardwr	ea	6	1000.00	eu	6.0	6	8.0	48	MS	37.73	1.8	7.8
2	Support post & hardware	ea	1	1000.00	eu	1.0	1	40.0	40	MS	37.73	1.5	2.5
** Subtotal **						7.0			88			3.3	10.3
** WBS: 1.2.1.2.3.5.3.6	Assemble & Test												
1	Assemble & test	ea	1	500.00	eu	0.5	1	120.0	120	MU	35.92	4.3	4.8
2	Bakeout & UHV qualify	ea	1	500.00	eu	0.5	1	120.0	120	MU	35.92	4.3	4.8
3	Survey/calibration		0	0.00		0.0	2	16.0	32	MU	35.92	1.1	1.1
4	Misc tools,fixtures,cart	lot	1	500.00	eu	0.5	1	40.0	40	MS	37.73	1.5	2.0
** Subtotal **						1.5			312			11.3	12.8
** WBS: 1.2.1.2.3.5.3.7	Install & Align												
1	Transport & onsite setup	lot	1	200.00	eu	0.2	2	16.0	32	MU	35.92	1.1	1.3
2	Vac assmble & leakcheck	ea	1	50.00	eu	0.1	2	20.0	40	MU	35.92	1.4	1.5
3	Installation alignment		0	0.00		0.0	2	32.0	64	MU	35.92	2.3	2.3
4	Mech install,test,debug	ea	1	500.00	eu	0.5	2	20.0	40	MU	35.92	1.4	1.9
5	Electrical installation		0	0.00		0.0	1	20.0	20	IEL	62.85	1.3	1.3
** Subtotal **						0.8			196			7.6	8.3
** WBS: 1.2.1.2.3.8.1	Fab/Buy Mech Parts & Subassy's												
1	Linear device mech	ea	1	4000.00	cp	4.0	0	0.0	0		0.00	0.0	4.0
2	Mods for water cooling	ea	1	200.00	eu	0.2	1	20.0	20	MS	37.73	0.8	1.0
3	In-vac part fab.	ea	1	1000.00	eu	1.0	1	80.0	80	MS	37.73	3.0	4.0
4	Brazing & welding assy	ea	1	200.00	A91	0.2	1	20.0	20	MS	37.73	0.8	1.0
5	Detector,feedthru,phosphr	ea	1	500.00	eu	0.5	1	40.0	40	MS	37.73	1.5	2.0
** Subtotal **						5.9			160			6.0	11.9
** WBS: 1.2.1.2.3.8.3	Fab/Buy Vacuum Chamber & Supports												
1	Spool piece	ea	2	2000.00	eu	4.0	0	0.0	0		0.00	0.0	4.0
2	Struts & Mounting hardwar	ea	6	500.00	eu	3.0	6	8.0	48	MS	37.73	1.8	4.8
3	Support post & hardware	ea	1	300.00	eu	0.3	1	20.0	20	MS	37.73	0.8	1.1
4	Misc flanges & feedthrus	lot	1	2000.00	eu	2.0	1	20.0	20	MS	37.73	0.8	2.8
** Subtotal **						9.3			88			3.3	12.6
** WBS: 1.2.1.2.3.8.4	Vacuum Pumping, Gauges, Controllers, P.S.												
1	Ion pump, 60l/s	ea	1	2700.00	A91	2.7	1	4.0	4	MU	35.92	0.1	2.8
2	Ion pump controller	ea	1	1600.00	A91	1.6	1	4.0	4	EI	33.00	0.1	1.7
3	Ion pump cable, bakeable	ea	1	250.00	A91	0.2	0	0.0	0		0.00	0.0	0.2
4	IEEE-488 cable, 3m	ea	1	150.00	cp	0.1	0	0.0	0		0.00	0.0	0.1

Technical Components Cost Estimate

ITM NBR	ITM DESCRIPTION	UNIT MEAS	NBR UNITS	UNIT COST	COST BASIS	TOTAL ISC K$	LBR UNTS	HRS/ UNIT	TOTAL HRS	CRAFT CODE	CRAFT RATE	TOTAL LABOR K$	ISC LABOR K$
5	Roughing valve	ea	2	650.00	A91	1.3	0	0.0	0		0.00	0.0	1.3
6	Ion gauge & contrls	ea	1	3500.00	A91	3.5	1	4.0	4	MU	35.92	0.1	3.6
7	Ion gauge cable, bakeable	ea	1	250.00	cp	0.2	1	4.0	4	EI	33.00	0.1	0.4
8	Junction box, IG cable	ea	1	200.00	eu	0.2	1	4.0	4	EI	33.00	0.1	0.3
9	Interlock cable	ea	1	100.00	eu	0.1	0	0.0	0		0.00	0.0	0.1
** Subtotal **						10.0			20			0.7	10.7
** WBS: 1.2.1.2.3.8.5	Assemble, Bakeout, Test												
1	Assemble & test	ea	2	500.00	eu	1.0	2	20.0	40	MS	37.73	1.5	2.5
2	Bakeout & UHV qualify	ea	2	500.00	eu	1.0	2	40.0	80	MS	37.73	3.0	4.0
3	Survey/calibration		0	0.00		0.0	2	16.0	32	MS	37.73	1.2	1.2
** Subtotal **						2.0			152			5.7	7.7
** WBS: 1.2.1.2.3.8.6	Installation												
1	Transport & on-site setup		0	0.00		0.0	2	4.0	8	MU	35.92	0.3	0.3
2	Vac assemble & leak check	ea	1	100.00	eu	0.1	2	20.0	40	MU	35.92	1.4	1.5
3	Mech install/test/debug	ea	1	100.00	eu	0.1	2	20.0	40	MU	35.92	1.4	1.5
** Subtotal **						0.2			88			3.2	3.4
** WBS: 1.2.1.2.3.9.1	Fab/Buy Mech Parts & Subassy's												
1	Misc machine shop effort	lot	1	1000.00	eu	1.0	1	40.0	40	MS	37.73	1.5	2.5
2	Misc mech tech & tools	lot	1	1000.00	eu	1.0	1	40.0	40	MU	35.92	1.4	2.4
** Subtotal **						2.0			80			2.9	4.9
** WBS: 1.2.1.2.3.9.2	Fab/Buy Electrical and Controls												
1	Cables,valve actuation &	lot	3	100.00	eu	0.3	3	4.0	12	EI	33.00	0.4	0.7
2	X-connect blocks & frame	ea	1	500.00	eu	0.5	1	24.0	24	EI	33.00	0.8	1.3
3	Relays blocks & frame	ea	1	580.00	cp	0.6	1	24.0	24	EI	33.00	0.8	1.4
4	48 channel opto-isolators	ea	1	700.00	cp	0.7	1	24.0	24	EI	33.00	0.8	1.5
5	Cable trays, conduit, etc	lot	1	2000.00	eu	2.0	1	120.0	120	IEL	62.85	7.5	9.5
6	Double elec. rack	ea	1	1300.00	cp	1.3	1	16.0	16	EI	33.00	0.5	1.8
7	BA panel 3 ph 30A	ea	1	50.00	eu	0.1	1	16.0	16	EI	33.00	0.5	0.6
8	Breaker panel	ea	2	200.00	eu	0.4	2	2.0	4	EI	33.00	0.1	0.5
9	Plug strip	ea	2	20.00	eu	0.0	2	1.0	2	EI	33.00	0.1	0.1
10	Rack fans	ea	2	50.00	eu	0.1	2	2.0	4	EI	33.00	0.1	0.2
11	Misc. hardware	lot	1	1000.00	eu	1.0	1	40.0	40	EI	33.00	1.3	2.3
12	Programmabl logic cntrllr	ea	1	8000.00	eu	8.0	1	40.0	40	CP	59.40	2.4	10.4
13	PLC Cabling	ea	1	500.00	eu	0.5	1	20.0	20	EI	33.00	0.7	1.2
14	Operator Console	ea	1	8000.00	eu	8.0	0	0.0	0		0.00	0.0	8.0
15	Branch line device server		0	0.00		0.0	0	0.0	0		0.00	0.0	0.0
16	VME crate w/power spply	ea	1	3000.00	cp	3.0	1	0.0	0		0.00	0.0	3.0
17	VME processor	ea	1	3500.00	cp	3.5	0	40.0	0	CP	59.40	0.0	3.5
18	IEEE-48 module	ea	1	800.00	cp	0.8	0	0.0	0		0.00	0.0	0.8
19	Real time O/S	ea	1	500.00	cp	0.5	0	0.0	0		0.00	0.0	0.5
20	Network interface		0	0.00		0.0	0	0.0	0		0.00	0.0	0.0
21	Ethernet router	ea	1	2000.00	eu	2.0	1	20.0	20	EI	33.00	0.7	2.7
22	Ethernet distribution	ea	1	2000.00	eu	2.0	0	0.0	0		0.00	0.0	2.0
23	Cables, thicknet	ea	5	200.00	eu	1.0	0	0.0	0		0.00	0.0	1.0
24	Display/control station		0	0.00		0.0	0	0.0	0		0.00	0.0	0.0
25	Display station	ea	1	10000.00	eu	10.0	0	0.0	0		0.00	0.0	10.0
26	Display software	ea	1	3000.00	eu	3.0	1	40.0	40	CP	59.40	2.4	5.4
27	TV display controls		0	0.00		0.0	0	0.0	0		0.00	0.0	0.0
28	TV monitor	ea	1	500.00	eu	0.5	0	0.0	0		0.00	0.0	0.5
29	TV patch panel	ea	1	200.00	eu	0.2	1	20.0	20	EI	33.00	0.7	0.9
30	TV scanner	ea	1	1000.00	eu	1.0	0	0.0	0		0.00	0.0	1.0
31	TV camera	ea	6	500.00	eu	3.0	0	0.0	0		0.00	0.0	3.0
32	Cabling, patch	ea	6	20.00	eu	0.1	0	0.0	0		0.00	0.0	0.1
33	24VDC power distribution		0	0.00		0.0	0	0.0	0		0.00	0.0	0.0
34	24VDC power supply	ea	1	2000.00	eu	2.0	1	20.0	20	EI	33.00	0.7	2.7
35	24VDC distribution	ea	1	2000.00	eu	2.0	1	40.0	40	EI	33.00	1.3	3.3

Technical Components Cost Estimate

ITM NBR	ITM DESCRIPTION	UNIT MEAS	NBR UNITS	UNIT COST COST BASIS	TOTAL ISC K$	LBR UNTS	HRS/ UNIT	TOTAL HRS	CRAFT CODE	CRAFT RATE	TOTAL LABOR K$	ISC + LABOR K$
** Subtotal **					58.1			486			21.7	79.8
** WBS: 1.2.1.2.3.9.3	Fab/Buy Vacuum Chamber & Supports											
1	Misc flanges,viewprts,etc	lot	1	3000.00 eu	3.0	0	0.0	0		0.00	0.0	3.0
2	Roughing valve	ea	4	650.00 cp	2.6	0	0.0	0		0.00	0.0	2.6
3	Misc. unistrut/hardware	lot	1	500.00 eu	0.5	1	40.0	40	MU	35.92	1.4	1.9
** Subtotal **					6.1			40			1.4	7.5
** WBS: 1.2.1.2.3.9.5	Assemble, Bakeout, Test											
1	Misc assemble & test	ea	1	1000.00 eu	1.0	2	80.0	160	MU	35.92	5.7	6.7
2	Misc bakeout/UHV qualify	lot	1	1000.00 eu	1.0	2	80.0	160	MU	35.92	5.7	6.7
3	Survey/calibration		0	0.00	0.0	3	32.0	96	MU	35.92	3.4	3.4
** Subtotal **					2.0			416			14.9	16.9
** WBS: 1.2.1.2.3.9.6	Installation											
1	Transport & on-site setup	lot	1	100.00 eu	0.1	2	40.0	80	MU	35.92	2.9	3.0
2	Vac assmble & leak checks	lot	1	500.00 eu	0.5	2	40.0	80	MU	35.92	2.9	3.4
4	Lead shielding installatn	lot	1	200.00 eu	0.2	1	40.0	40	MU	35.92	1.4	1.6
5	Installation alignment		0	0.00	0.0	3	32.0	96	MU	35.92	3.4	3.4
6	Pneumatic service	ea	1	1000.00 eu	1.0	1	40.0	40	MU	35.92	1.4	2.4
7	LCW service	lot	1	1000.00 eu	1.0	1	40.0	40	MU	35.92	1.4	2.4
8	Mech install/test/debug	lot	1	100.00 eu	0.1	2	40.0	80	MU	35.92	2.9	3.0
9	Elec installation		0	0.00	0.0	1	40.0	40	IEL	62.85	2.5	2.5
10			0	0.00	0.0	1	40.0	40	EI	33.00	1.3	1.3
** Subtotal **					2.9			536			20.2	23.1
** WBS: 1.2.1.2.3.10	Branch Line Safety Systems											
1	ILC & SBX	ea	2	1500.00 eu	3.0	0	0.0	0		0.00	0.0	3.0
2	Eurocard crate	ea	1	1000.00 eu	1.0	0	0.0	0		0.00	0.0	1.0
3	Key panel	ea	1	300.00 cp	0.3	0	0.0	0		0.00	0.0	0.3
4	Monitor lights panel	ea	6	250.00 cp	1.5	0	0.0	0		0.00	0.0	1.5
5	Push button panel	ea	1	250.00 eu	0.2	0	0.0	0		0.00	0.0	0.2
6	Breaker panel	ea	1	250.00 eu	0.2	0	0.0	0		0.00	0.0	0.2
7	Cables	lot	1	100.00 eu	0.1	0	0.0	0		0.00	0.0	0.1
8	Wiring assembly		0	0.00	0.0	1	80.0	80	EI	33.00	2.6	2.6
9	Misc hardware & locks	lot	1	1000.00 eu	1.0	0	0.0	0		0.00	0.0	1.0
10	Elec installation		0	0.00	0.0	1	40.0	40	IEL	62.85	2.5	2.5
** Subtotal **					7.4			120			5.2	12.6
** WBS: 1.2.1.2.3.11.1	Vertical Refocus Mirror											
1	Vertical Refocus Mirror	ea	1	20000.00 eu	20.0	0	0.0	0		0.00	0.0	20.0
2	Piezo-tranducer	ea	1	10000.00 eu	10.0	0	0.0	0		0.00	0.0	10.0
3	Mirror mount	ea	1	5000.00 eu	5.0	1	120.0	120	MS	37.73	4.5	9.5
4	Vacuum vessel	ea	1	10000.00 eu	10.0	0	0.0	0		0.00	0.0	10.0
5	Stand	ea	1	5000.00 eu	5.0	1	80.0	80	MS	37.73	3.0	8.0
6	Ion pump 220 l/s	ea	1	7000.00 eu	7.0	1	8.0	8	MU	35.92	0.3	7.3
7	Ion pump controller	ea	1	2500.00 eu	2.5	1	8.0	8	EI	33.00	0.3	2.8
8	Ion gauge	ea	1	700.00 eu	0.7	1	8.0	8	MU	35.92	0.3	1.0
9	Ion gauge controller	ea	1	2100.00 eu	2.1	1	8.0	8	EI	33.00	0.3	2.4
10	Horizontl deflectn mirror	ea	2	2000.00 eu	4.0	0	0.0	0		0.00	0.0	4.0
11	Mirror mount	ea	1	5000.00 eu	5.0	1	120.0	120	MS	37.73	4.5	9.5
12	Installation	lot	1	200.00 eu	0.2	1	24.0	24	MU	35.92	0.9	1.1
** Subtotal **					71.5			376			14.0	85.5
** WBS: 1.2.1.2.3.11.2	Diagnostic Systems											
1	Diagnostics	ea	1	2000.00 eu	2.0	1	80.0	80	EI	33.00	2.6	4.6
2	Vacuum vessel	ea	1	2000.00 eu	2.0	0	0.0	0		0.00	0.0	2.0
3	Stand	ea	1	2000.00 eu	2.0	1	80.0	80	MS	37.73	3.0	5.0
4	Ion pump 120 l/s	ea	1	4500.00 eu	4.5	1	8.0	8	MU	35.92	0.3	4.8
5	Ion pump controller	ea	1	2500.00 eu	2.5	1	8.0	8	EI	33.00	0.3	2.8

Technical Components Cost Estimate

ITM NBR	ITM DESCRIPTION	UNIT MEAS	NBR UNITS	UNIT COST	COST BASIS	TOTAL ISC K$	LBR UNTS	HRS/ UNIT	TOTAL HRS	CRAFT CODE	CRAFT RATE	TOTAL LABOR K$	ISC LABOR K$
6	Ion gauge	ea	1	700.00	eu	0.7	1	8.0	8	MU	35.92	0.3	1.0
7	Installation	lot	1	200.00	eu	0.2	1	24.0	24	MU	35.92	0.9	1.1
** Subtotal **						13.9			208			7.4	21.3
** WBS: 1.2.1.2.3.11.3	Beam Transport												
1	Bellows	ea	4	1000.00	eu	4.0	4	16.0	64	MU	35.92	2.3	6.3
2	Beam Pipe	ea	4	500.00	eu	2.0	4	8.0	32	MU	35.92	1.1	3.1
3	Isolation valves	ea	3	5000.00	eu	15.0	3	16.0	48	MU	35.92	1.7	16.7
4	Installation	lot	1	200.00	eu	0.2	1	24.0	24	MU	35.92	0.9	1.1
** Subtotal **						21.2			168			6.0	27.2
** WBS: 1.2.1.2.4.1.1	Aperture Assemblies 1 & 2												
1	Parts fabrication	ea	2	350.00	eu	0.7	2	40.0	80	MS	37.73	3.0	3.7
2	Inspection	LOT	2	25.00	EU	0.1	2	4.0	8	MS	37.73	0.3	0.4
3	Cleaning	lot	2	25.00	eu	0.1	2	4.0	8	MU	35.92	0.3	0.3
4	Brazing,fixturing,tooling	ea	2	200.00	eu	0.4	2	40.0	80	MU	35.92	2.9	3.3
5	Vac & water leak check	ea	1	25.00	eu	0.0	2	6.0	12	MU	35.92	0.4	0.5
6	Misc flanges & hardware	lot	1	1000.00	eu	1.0	1	8.0	8	MU	35.92	0.3	1.3
** Subtotal **						2.2			196			7.2	9.4
** WBS: 1.2.1.2.4.1.2	Bellows 1 & 2												
1	Welded capsule & flanges	ea	2	2500.00	cp	5.0	0	0.0	0		0.00	0.0	5.0
2	Inspection	ea	2	25.00	eu	0.1	2	4.0	8	MS	37.73	0.3	0.4
3	Cleaninig	ea	2	25.00	eu	0.1	2	2.0	4	MU	35.92	0.1	0.2
4	Vac furnace bakeout	ea	2	100.00	eu	0.2	2	6.0	12	MU	35.92	0.4	0.6
5	Leak check	ea	2	25.00	eu	0.1	2	4.0	8	MU	35.92	0.3	0.3
6	Misc flanges & hardware	lot	1	1000.00	eu	1.0	1	8.0	8	MU	35.92	0.3	1.3
** Subtotal **						6.3			40			1.5	7.8
** WBS: 1.2.1.2.4.1.3	Isolation Valves 1 & 2												
1	DN160, 24 volt,w/solenoid	ea	2	16450.00	A91	32.9	0	0.0	0		0.00	0.0	32.9
2	Leak check	ea	2	25.00	eu	0.1	2	4.0	8	MS	37.73	0.3	0.4
3	Inspection & cleaning	ea	2	50.00	eu	0.1	2	4.0	8	MU	35.92	0.3	0.4
4	Test & qualify	ea	2	50.00	eu	0.1	2	4.0	8	MU	35.92	0.3	0.4
5	Cables & connectors	ea	2	200.00	eu	0.4	2	4.0	8	EI	33.00	0.3	0.7
6	Misc. flanges & hardware	lot	1	1000.00	eu	1.0	1	8.0	8	MU	35.92	0.3	1.3
** Subtotal **						34.5			40			1.4	36.0
** WBS: 1.2.1.2.4.1.4	Photon Shutter												
1	Vacuum vessel	ea	1	3300.00	A91	3.3	0	0.0	0		0.00	0.0	3.3
2	Vessel inspection	ea	1	25.00	eu	0.0	1	6.0	6	MS	37.73	0.2	0.3
3	Vessel leak check	ea	1	25.00	eu	0.0	1	4.0	4	MU	35.92	0.1	0.2
4	Bellows	ea	1	2535.00	A91	2.5	0	0.0	0		0.00	0.0	2.5
5	Bellows inspection	ea	1	25.00	eu	0.0	1	2.0	2	MS	37.73	0.1	0.1
6	Bellows cleaning	ea	1	25.00	eu	0.0	1	2.0	2	MU	35.92	0.1	0.1
7	Bellows furnace bakeout	ea	1	25.00	eu	0.0	1	6.0	6	MU	35.92	0.2	0.2
8	Bellows leak check	ea	1	25.00	eu	0.0	1	3.0	3	MU	35.92	0.1	0.1
9	Linear actuator	ea	1	1860.00	A91	1.9	0	0.0	0		0.00	0.0	1.9
10	Actuator Inspection	ea	1	25.00	eu	0.0	1	1.0	1	MS	37.73	0.0	0.1
11	Electro-pneumatic solenoi	ea	1	53.00	A91	0.1	0	0.0	0		0.00	0.0	0.1
12	Thermal absorber fab	ea	1	1724.00	A91	1.7	0	0.0	0		0.00	0.0	1.7
13	Absorber inspection	ea	1	25.00	eu	0.0	1	2.0	2	MS	37.73	0.1	0.1
14	Absorber cleaning &brazng	ea	1	200.00	eu	0.2	1	32.0	32	MU	35.92	1.1	1.3
15	Absorber welding	ea	1	25.00	eu	0.0	1	12.0	12	MU	35.92	0.4	0.5
16	Vac & water leak check	ea	1	25.00	eu	0.0	1	6.0	6	MU	35.92	0.2	0.2
17	Bellows drive plate	ea	1	120.00	A91	0.1	1	24.0	24	NC	56.50	1.4	1.5
18	Misc part fab	lot	1	400.00	eu	0.4	1	60.0	60	MS	37.73	2.3	2.7
19	Actuator support fab	ea	2	200.00	eu	0.4	1	18.0	18	MS	37.73	0.7	1.1
20	Actuator assy & alignment	ea	1	24.00	eu	0.0	1	16.0	16	MU	35.92	0.6	0.6
21	Bakeout & UHV qualify	ea	1	100.00	eu	0.1	1	80.0	80	MU	35.92	2.9	3.0
22	Photon shutter leak check	ea	1	25.00	eu	0.0	1	8.0	8	MU	35.92	0.3	0.3

Technical Components Cost Estimate

ITM NBR	ITM DESCRIPTION	UNIT MEAS	NBR UNITS	UNIT COST	COST BASIS	TOTAL ISC K$	LBR UNTS	HRS/ UNIT	TOTAL HRS	CRAFT CODE	CRAFT RATE	TOTAL LABOR K$	ISC + LABOR K$
23	Misc.	lot	1	1000.00	eu	1.0	1	40.0	40	MU	35.92	1.4	2.4
** Subtotal **						12.0			322			12.2	24.2
** WBS: 1.2.1.2.4.1.5	Vacuum Systems												
1	TSP-vacuum vessel	ea	1	2620.00	A91	2.6	0	0.0	0		0.00	0.0	2.6
2	Vessel inspection	ea	1	25.00	eu	0.0	1	6.0	6	MS	37.73	0.2	0.3
3	Vessel leak check	ea	1	25.00	eu1	0.0	1	8.0	8	MU	35.92	0.3	0.3
4	TSP filament	ea	1	650.00	A91	0.7	0	0.0	0		0.00	0.0	0.7
5	TSP power supply	ea	1	1950.00	cp	1.9	0	0.0	0		0.00	0.0	1.9
6	TSP cartridge cable	ea	1	500.00	eu	0.5	0	0.0	0		0.00	0.0	0.5
7	TSP Extr. fab,clean,instl	ea	1	585.00	eu	0.6	1	40.0	40	MU	35.92	1.4	2.0
8	Ion pumps, 220 l/s	ea	1	4865.00	A91	4.9	1	8.0	8	MS	37.73	0.3	5.2
9	Ion pump controller	ea	1	2500.00	A91	2.5	1	8.0	8	EI	33.00	0.3	2.8
10	Ion pump cable, bakeable	ea	1	250.00	cp	0.2	1	8.0	8	EI	33.00	0.3	0.5
11	IEEE-488 cable, pump ctrl	ea	1	100.00	A91	0.1	0	0.0	0		0.00	0.0	0.1
12	Ion gauge	ea	1	400.00	cp	0.4	1	8.0	8	MU	35.92	0.3	0.7
13	Ion gauge cable, bakeable	ea	1	100.00	A91	0.1	1	8.0	8	EI	33.00	0.3	0.4
14	Junction box, IG cable	ea	1	200.00	eu	0.2	0	0.0	0		0.00	0.0	0.2
15	Ion gauge controller	ea	1	2700.00	A91	2.7	1	4.0	4	EI	33.00	0.1	2.8
16	Interlock cable	ea	1	100.00	eu	0.1	1	4.0	4	EI	33.00	0.1	0.2
** Subtotal **						17.6			102			3.6	21.2
** WBS: 1.2.1.2.4.1.6	Photon Shutter Support System												
1	Tri-frame weldment	ea	1	700.00	eu	0.7	1	60.0	60	MS	37.73	2.3	3.0
2	Assy frame weldment	ea	1	700.00	eu	0.7	1	60.0	60	MS	37.73	2.3	3.0
3	Inspection & painting	ea	2	150.00	eu	0.3	2	8.0	16	MS	37.73	0.6	0.9
4	Parker clevises	ea	6	25.00	cp	0.1	0	0.0	0		0.00	0.0	0.1
5	Hex stand-offs	ea	6	10.00	eu	0.1	6	2.0	12	MU	35.92	0.4	0.5
6	Strut assemblies	ea	6	500.00	eu	3.0	6	9.0	54	MS	37.73	2.0	5.0
7	Hilti stud assemblies	ea	6	25.00	eu	0.1	6	2.0	12	MS	37.73	0.5	0.6
8	Support table	ea	1	150.00	eu	0.1	1	8.0	8	MS	37.73	0.3	0.5
9	Ion pump supports	ea	2	15.00	eu	0.0	2	8.0	16	MS	37.73	0.6	0.6
10	IV #2 supports	ea	2	15.00	eu	0.0	2	8.0	16	MS	37.73	0.6	0.6
11	Fast shutter supports	ea	2	15.00	eu	0.0	2	8.0	16	MS	37.73	0.6	0.6
12	Installation & grouting	ea	6	25.00	eu	0.1	6	2.0	12	MS	37.73	0.5	0.6
13	Onsite floor prep	ea	6	25.00	eu	0.1	6	2.0	12	MU	35.92	0.4	0.6
14	Transport & onsite setup	ea	1	200.00	eu	0.2	1	20.0	20	MU	35.92	0.7	0.9
** Subtotal **						5.8			314			11.8	17.6
** WBS: 1.2.1.2.4.1.7	Fast Shutter												
1	DN160, 25x150 aperture	ea	1	16540.00	A91	16.5	0	0.0	0		0.00	0.0	16.5
2	High vacuum sensors	ea	2	1050.00	A91	2.1	0	0.0	0		0.00	0.0	2.1
3	HV sensor modules	ea	2	2607.00	A91	5.2	0	0.0	0		0.00	0.0	5.2
4	Controller rack unit	ea	1	2552.00	A91	2.6	0	0.0	0		0.00	0.0	2.6
5	Control module	ea	1	588.00	A91	0.6	0	0.0	0		0.00	0.0	0.6
7	Remote module	ea	1	1229.00	A91	1.2	0	0.0	0		0.00	0.0	1.2
8	Sense to control cable	ea	2	703.00	A91	1.4	0	0.0	0		0.00	0.0	1.4
9	Control to shutter cable	ea	1	447.00	A91	0.4	0	0.0	0		0.00	0.0	0.4
10	Shutter inspection	ea	1	25.00	eu	0.0	1	4.0	4	MS	37.73	0.2	0.2
11	Shutter leak check	ea	1	24.00	eu	0.0	1	12.0	12	MU	35.92	0.4	0.5
12	Misc flanges & hardware	lot	1	1000.00	eu	1.0	1	8.0	8	MU	35.92	0.3	1.3
14	Cables install	lot	1	500.00	eu	0.5	1	16.0	16	IEL	62.85	1.0	1.5
14	Cables terminate		0	0.00		0.0	1	16.0	16	EI	33.00	0.5	0.5
** Subtotal **						31.6			56			2.4	34.0
** WBS: 1.2.1.2.4.1.8	Collimation Spool												
1	Vacuum vessel	ea	1	1250.00	A91	1.2	0	0.0	0		0.00	0.0	1.2
2	Vessel inspection	ea	1	25.00	eu	0.0	1	4.0	4	MS	37.73	0.2	0.2
3	Vessel leak check	ea	1	25.00	eu	0.0	1	12.0	12	MU	35.92	0.4	0.5
4	Lead shielding assy	lot	1	1000.00	eu	1.0	1	40.0	40	MU	35.92	1.4	2.4
5	Misc flanges & hardware	lot	1	1000.00	eu	1.0	1	8.0	8	MU	35.92	0.3	1.3

Technical Components Cost Estimate

ITM NBR	ITM DESCRIPTION	UNIT MEAS	NBR UNITS	UNIT COST	COST BASIS	TOTAL ISC K$	LBR UNTS	HRS/ UNIT	TOTAL HRS	CRAFT CODE	CRAFT RATE	TOTAL LABOR K$	ISC + LABOR K$
** Subtotal **						3.3			64			2.3	5.6
** WBS: 1.2.1.2.4.1.9	Cleaning, Assemble, Bakeout & Test												
1	Cleaning, assemble, &test	ea	1	200.00	eu	0.2	1	80.0	80	MU	35.92	2.9	3.1
2	Bakeout & UHV qualify	ea	1	200.00	eu	0.2	1	120.0	120	MU	35.92	4.3	4.5
3	Survey/calibration	ea	1	200.00	eu	0.2	1	32.0	32	MU	35.92	1.1	1.3
4	Misc. flanges & hardware	lot	1	500.00	eu	0.5	1	4.0	4	MU	35.92	0.1	0.6
5	Misc. fixtures & tools	lot	1	500.00	eu	0.5	1	20.0	20	MU	35.92	0.7	1.2
** Subtotal **						1.6			256			9.2	10.8
** WBS: 1.2.1.2.4.1.10	Installation												
1	Pneumatic service	ea	1	2000.00	eu	2.0	1	40.0	40	MU	35.92	1.4	3.4
2	LCW service	ea	1	2000.00	eu	2.0	1	40.0	40	MU	35.92	1.4	3.4
3	Transport & onsite setup	ea	1	200.00	eu	0.2	1	20.0	20	MU	35.92	0.7	0.9
4	Vac assemble & leak check	ea	1	50.00	eu	0.1	1	20.0	20	MU	35.92	0.7	0.8
5	Installation alignment	ea	1	100.00	eu	0.1	1	20.0	20	MS	37.73	0.8	0.9
6	Pneumatic hardware&connec	ea	1	300.00	eu	0.3	1	16.0	16	MU	35.92	0.6	0.9
7	Mech instll,test	lot	1	200.00	eu	0.2	1	80.0	80	MU	35.92	2.9	3.1
8	Elec install,test	lot	1	200.00	eu	0.2	1	40.0	40	IEL	62.85	2.5	2.7
9	" "		0	0.00		0.0	1	20.0	20	EI	33.00	0.7	0.7
** Subtotal **						5.0			296			11.7	16.7
** WBS: 1.2.1.2.4.2.1	Personnel Safety Shutter												
1	Vacuum vessel	ea	1	5000.00	eu	5.0	1	40.0	40	MS	37.73	1.5	6.5
2	Vessel inspection	ea	1	25.00	eu	0.0	1	6.0	6	MS	37.73	0.2	0.3
3	Vessel leak check	ea	1	25.00	eu	0.0	1	8.0	8	MU	35.92	0.3	0.3
4	Bellows	ea	1	2535.00	A91	2.5	0	0.0	0		0.00	0.0	2.5
5	Bellows inspection	ea	1	25.00	eu	0.0	1	2.0	2	MS	37.73	0.1	0.1
6	Bellows cleaning	ea	1	25.00	eu	0.0	1	2.0	2	MU	35.92	0.1	0.1
7	Bellows furnace bakeout	ea	1	25.00	eu	0.0	1	8.0	8	MU	35.92	0.3	0.3
8	Bellows leak check	ea	1	25.00	eu	0.0	1	4.0	4	MU	35.92	0.1	0.2
9	Linear actuator	ea	1	1860.00	A91	1.9	0	0.0	0		0.00	0.0	1.9
10	Actuator Inspection	ea	1	25.00	eu	0.0	1	1.0	1	MS	37.73	0.0	0.1
11	Electro-pneumatic solenoi	ea	1	53.00	A91	0.1	0	0.0	0		0.00	0.0	0.1
12	Tungsten block buy	ea	1	3500.00	eu	3.5	0	0.0	0		0.00	0.0	3.5
13	Tungsten machining	ea	1	25.00	eu	0.0	1	16.0	16	MS	37.73	0.6	0.6
14	UHV sensor fab	ea	1	500.00	eu	0.5	1	60.0	60	MU	35.92	2.2	2.7
15	Tungsten clean & bake	ea	1	100.00	eu	0.1	1	32.0	32	MU	35.92	1.1	1.2
16	Bellows drive plate	ea	1	120.00	A91	0.1	1	24.0	24	NC	56.50	1.4	1.5
17	Misc part fab	lot	1	400.00	eu	0.4	1	60.0	60	MS	37.73	2.3	2.7
18	Actuator support fab	ea	2	200.00	eu	0.4	1	18.0	18	MS	37.73	0.7	1.1
19	Actuator assy & alignment	ea	1	25.00	eu	0.0	1	16.0	16	MU	35.92	0.6	0.6
20	Misc flanges & hardware	lot	1	350.00	eu	0.3	0	0.0	0		0.00	0.0	0.3
21	Safety shutter assy/bake	ea	1	100.00	eu	0.1	1	24.0	24	MU	35.92	0.9	1.0
22	Safety shutter leak check	ea	1	25.00	eu	0.0	1	8.0	8	MU	35.92	0.3	0.3
23	Bakeout & UHV qualify	ea	1	100.00	eu	0.1	1	80.0	80	MU	35.92	2.9	3.0
24	Lead shielding & support	lot	1	500.00	eu	0.5	1	40.0	40	MU	35.92	1.4	1.9
25	Misc.	lot	1	1000.00	eu	1.0	1	40.0	40	MU	35.92	1.4	2.4
** Subtotal **						16.8			489			18.3	35.1
** WBS: 1.2.1.2.4.2.2	Shield Wall Transition												
1	SWT vessel fab	ea	1	1200.00	eu	1.2	1	32.0	32	MS	37.73	1.2	2.4
2	SWT inspection	ea	1	25.00	eu	0.0	1	4.0	4	MS	37.73	0.2	0.2
3	SWT leak check	ea	1	25.00	eu	0.0	1	4.0	4	MU	35.92	0.1	0.2
4	SWT supports	ea	2	500.00	eu	1.0	2	8.0	16	MU	35.92	0.6	1.6
5	Shield wall mods	lot	1	250.00	eu	0.2	1	40.0	40	MU	35.92	1.4	1.7
6	Lead shielding	lot	1	100.00	eu	0.1	1	10.0	10	MU	35.92	0.4	0.5
7	Misc flanges & hardware	lot	1	1000.00	eu	1.0	1	8.0	8	MU	35.92	0.3	1.3
** Subtotal **						3.6			114			4.2	7.8

Technical Components Cost Estimate

ITM NBR	ITM DESCRIPTION	UNIT MEAS	NBR UNITS	UNIT COST	COST BASIS	TOTAL ISC K$	LBR UNTS	HRS/ UNIT	TOTAL HRS	CRAFT CODE	CRAFT RATE	TOTAL LABOR K$	ISC + LABOR K$
** WBS: 1.2.1.2.4.2.3	Safety Shutter Support System												
1	Frame weldment	ea	1	300.00	eu	0.3	1	40.0	40	MS	37.73	1.5	1.8
2	Assembly frame weldment	ea	1	300.00	eu	0.3	1	40.0	40	MS	37.73	1.5	1.8
3	Inspection & painting	eat	2	150.00	eu	0.3	2	8.0	16	MS	37.73	0.6	0.9
4	Parker clevises	ea	6	25.00	cp	0.1	0	0.0	0		0.00	0.0	0.1
5	Hex stand-offs	ea	6	10.00	eu	0.1	6	1.0	6	MS	37.73	0.2	0.3
6	Strut assemblies	ea	6	500.00	eu	3.0	6	9.0	54	MS	37.73	2.0	5.0
7	Hilti stud assemblies	ea	6	25.00	eu	0.1	6	2.0	12	MS	37.73	0.5	0.6
8	Main table	ea	1	150.00	eu	0.1	1	12.0	12	MS	37.73	0.5	0.6
9	Ion pump install fixture	ea	1	200.00	eu	0.2	1	12.0	12	MU	35.92	0.4	0.6
10	Ion pump support brackets	ea	2	15.00	eu	0.0	2	4.0	8	MS	37.73	0.3	0.3
11	Installation & grouting	ea	6	25.00	eu	0.1	6	2.0	12	MU	35.92	0.4	0.6
12	Onsite floor prep	ea	6	25.00	eu	0.1	6	2.0	12	MU	35.92	0.4	0.6
13	Transport & onsite setup	ea	1	200.00	eu	0.2	1	20.0	20	MU	35.92	0.7	0.9
** Subtotal **						5.1			244			9.1	14.2
** WBS: 1.2.1.2.4.2.4	Isolation Valve												
1	DN100,24volt, w/solenoid	ea	1	10730.00	cp	10.7	1	16.0	16	MU	35.92	0.6	11.3
2	Leak check	ea	1	25.00	eu	0.0	1	4.0	4	MS	37.73	0.2	0.2
3	Inspection & cleaning	ea	1	50.00	eu	0.1	1	4.0	4	MU	35.92	0.1	0.2
4	Test & qualify	ea	1	50.00	eu	0.1	1	4.0	4	MU	35.92	0.1	0.2
5	Cables & connectors	lot	1	200.00	eu	0.2	1	8.0	8	EI	33.00	0.3	0.5
6	Misc. flanges & hardware	lot	1	1000.00	eu	1.0	1	8.0	8	MU	35.92	0.3	1.3
** Subtotal **						12.1			44			1.6	13.6
** WBS: 1.2.1.2.4.2.5	Vacuum Systems												
1	Ion pump, 220l/s	ea	1	4865.00	A91	4.9	1	8.0	8	MS	37.73	0.3	5.2
2	Ion pump controller	ea	1	2500.00	A91	2.5	1	8.0	8	EI	33.00	0.3	2.8
3	Ion pump cable, bakeable	ea	1	250.00	cp	0.2	1	8.0	8	EI	33.00	0.3	0.5
4	IEEE-488 cable, pump ctrl	ea	1	100.00	A91	0.1	0	0.0	0		0.00	0.0	0.1
5	Ion gauge	ea	1	400.00	cp	0.4	1	8.0	8	MU	35.92	0.3	0.7
6	Ion gauge cable,bakeable	ea	1	100.00	A91	0.1	1	8.0	8	EI	33.00	0.3	0.4
7	Junction box, IG cable	ea	1	200.00	eu	0.2	0	0.0	0		0.00	0.0	0.2
8	Ion gauge controller	ea	1	2700.00	A91	2.7	1	4.0	4	EI	33.00	0.1	2.8
9	Interlock cable	ea	1	100.00	eu	0.1	1	4.0	4	EI	33.00	0.1	0.2
10	Roughing valves	ea	4	650.00	A91	2.6	0	0.0	0		0.00	0.0	2.6
11	Misc flanges & hardware	lot	1	1000.00	eu	1.0	1	8.0	8	MU	35.92	0.3	1.3
** Subtotal **						14.8			56			1.9	16.7
** WBS: 1.2.1.2.4.2.6	Cleaning, Assembly, Bakeout and Test												
1	Cleaning,assemble,test	lot	1	200.00	ei	0.2	1	80.0	80	MU	35.92	2.9	3.1
2	Bakeout & UHV qualify	lot	1	200.00	eu	0.2	1	120.0	120	MU	35.92	4.3	4.5
3	Survey/calibration	lot	1	200.00	eu	0.2	1	32.0	32	MU	35.92	1.1	1.3
4	Misc flanges & hardware	lot	1	500.00	eu	0.5	1	4.0	4	MU	35.92	0.1	0.6
5	Misc. fixtures & tools	lot	1	500.00	eu	0.5	1	20.0	20	MU	35.92	0.7	1.2
** Subtotal **						1.6			256			9.2	10.8
** WBS: 1.2.1.2.4.2.7	Installation												
1	Pneumatic service	ea	1	2000.00	eu	2.0	1	40.0	40	MU	35.92	1.4	3.4
2	LCW service	lot	1	2000.00	eu	2.0	1	40.0	40	MU	35.92	1.4	3.4
3	Transport/on-site setup	lot	1	200.00	eu	0.2	1	20.0	20	MU	35.92	0.7	0.9
4	Vac assemble & leak check	lot	1	50.00	eu	0.1	1	20.0	20	MU	35.92	0.7	0.8
5	Installation alignment	ea	1	100.00	eu	0.1	1	20.0	20	MS	37.73	0.8	0.9
6	Pneumatic hardware/cnnctn	lot	1	300.00	eu	0.3	1	16.0	16	MU	35.92	0.6	0.9
7	Mech install/test/debug	lot	1	200.00	eu	0.2	1	80.0	80	MU	35.92	2.9	3.1
8	Elec installation	lot	1	200.00	eu	0.2	1	40.0	40	IEL	62.85	2.5	2.7
9	" "		0	0.00		0.0	1	20.0	20	EI	33.00	0.7	0.7
** Subtotal **						5.0			296			11.7	16.7
* WBS: 1.2.1.2.4.4.1	Mechanical, Electrical & Controls												
1	Cables,valve actuation &	lot	3	100.00	eu	0.3	3	4.0	12	EI	33.00	0.4	0.7

Technical Components Cost Estimate

ITM NBR	ITM DESCRIPTION	UNIT MEAS	NBR UNITS	UNIT COST	COST BASIS	TOTAL ISC K$	LBR UNTS	HRS/ UNIT	TOTAL HRS	CRAFT CODE	CRAFT RATE	TOTAL LABOR K$	ISC + LABOR K$
2	X-connect blocks & frame	ea	1	500.00	eu	0.5	1	24.0	24	EI	33.00	0.8	1.3
3	Relays blocks & frame	ea	1	580.00	cp	0.6	1	24.0	24	EI	33.00	0.8	1.4
4	48 channel opto-isolator	ea	1	700.00	cp	0.7	1	24.0	24	EI	33.00	0.8	1.5
5	Cable trays, conduit, etc	lot	1	1000.00	eu	1.0	1	120.0	120	IEL	62.85	7.5	8.5
6	Double elec. rack	ea	1	1300.00	cp	1.3	1	16.0	16	EI	33.00	0.5	1.8
7	BA panel 3 ph 30A	ea	1	50.00	cp	0.1	1	1.0	1	EI	33.00	0.0	0.1
8	Breaker panel	ea	2	200.00	cp	0.4	2	2.0	4	EI	33.00	0.1	0.5
9	Plug strip	ea	2	20.00	eu	0.0	2	2.0	4	EI	33.00	0.1	0.2
10	Rack fans	ea	2	50.00	cp	0.1	2	2.0	4	EI	33.00	0.1	0.2
11	Flow switches/interlocks	ea	2	400.00	eu	0.8	4	8.0	32	EI	33.00	1.1	1.9
12	Custom bakeout jackets	ea	6	1200.00	EU	7.2	6	4.0	24	MU	35.92	0.9	8.1
13	Other bakeout heaters	ea	6	200.00	eu	1.2	6	4.0	24	MU	35.92	0.9	2.1
14	Misc electrical	lot	1	1000.00	eu	1.0	1	80.0	80	EI	33.00	2.6	3.6
15	Misc. hardware & locks	lot	1	1000.00	eu	1.0	1	80.0	80	MS	37.73	3.0	4.0
16	Electrical installation		0	0.00		0.0	1	40.0	40	IEL	62.85	2.5	2.5
17	Misc. machine shop effort	lot	1	1000.00	eu	1.0	1	160.0	160	MS	37.73	6.0	7.0
18	Misc mech tech & tools	lot	1	2000.00	eu	2.0	1	160.0	160	MU	35.92	5.7	7.7
** Subtotal **						19.2			833			34.0	53.2
** WBS: 1.2.1.2.4.4.2	Safety Systems												
1	ILC & SBX	ea	3	1500.00	eu	4.5	3	20.0	60	EI	33.00	2.0	6.5
2	Air pressure interlocks	ea	2	500.00	eu	1.0	2	16.0	32	EI	33.00	1.1	2.1
3	Eurocard crate	ea	1	1000.00	eu	1.0	0	0.0	0		0.00	0.0	1.0
4	Key panel	ea	1	300.00	eu	0.3	0	0.0	0		0.00	0.0	0.3
5	Monitor lights panel	ea	6	250.00	cp	1.5	0	0.0	0		0.00	0.0	1.5
6	Push button panel	ea	1	250.00	cp	0.2	0	0.0	0		0.00	0.0	0.2
7	Breaker panel	ea	1	250.00	eu	0.2	0	0.0	0		0.00	0.0	0.2
8	Fast shutter cable assy	ea	1	1000.00	eu	1.0	1	40.0	40	EI	33.00	1.3	2.3
9	Wiring assembly	ea	1	25.00	eu	0.0	1	80.0	80	EI	33.00	2.6	2.7
** Subtotal **						9.8			212			7.0	16.8
** WBS: 1.2.1.2.5.1.1	Fab/Buy Machined Parts & Subassy's												
1	Machine absorber blades	ea	2	1000.00	A91	2.0	2	40.0	80	MS	37.73	3.0	5.0
2	Braze absorber blades	ea	2	100.00	A91	0.2	2	20.0	40	MS	37.73	1.5	1.7
3	Brazing tooling/fixtures	ea	1	200.00	A91	0.2	1	20.0	20	MS	37.73	0.8	1.0
4	Blade/pivot mounting	ea	2	500.00	A91	1.0	2	60.0	120	MS	37.73	4.5	5.5
5	Actuator mechanism	ea	2	500.00	A91	1.0	2	40.0	80	MS	37.73	3.0	4.0
6	Limit stops & switches	ea	2	100.00	A91	0.2	2	20.0	40	MS	37.73	1.5	1.7
7	Bellws/conflat ass'y/weld	ea	2	1000.00	A91	2.0	2	40.0	80	MS	37.73	3.0	5.0
** Subtotal **						6.6			460			17.4	24.0
** WBS: 1.2.1.2.5.1.2	Fab/Buy Electrical and Controls												
1	Stepper/encoder/limits	ea	2	3000.00	eu	6.0	2	20.0	40	MS	37.73	1.5	7.5
2	Driver/encoder cables	ea	2	200.00	eu	0.4	1	16.0	16	EI	33.00	0.5	0.9
3	Flow switch & interlocks	ea	2	400.00	eu	0.8	2	4.0	8	EI	33.00	0.3	1.1
4	VME module,RS232,B-port	eat	1	800.00	eu	0.8	1	16.0	16	EI	33.00	0.5	1.3
5	CAble, RS232	ea	2	50.00	eu	0.1	0	0.0	0		0.00	0.0	0.1
6	Motor/encoder controllers	ea	2	2000.00	eu	4.0	2	8.0	16	EI	33.00	0.5	4.5
7	Triax cable, 100 '	lot	2	100.00	eu	0.2	2	8.0	16	EI	33.00	0.5	0.7
** Subtotal **						12.3			112			3.9	16.2
** WBS: 1.2.1.2.5.1.3	Fab/Buy Vacuum Chamber & Supports												
1	Custom vacuum chamber	ea	1	8000.00	A91	8.0	1	40.0	40	MU	35.92	1.4	9.4
2	Misc flanges/UHV hardware	lot	1	2500.00	eu	2.5	0	0.0	0		0.00	0.0	2.5
3	Mounting struts/hardware	ea	6	500.00	A91	3.0	6	8.0	48	MS	37.73	1.8	4.8
4	Support posts,frame,hrdwr	lot	1	1500.00	A91	1.5	1	40.0	40	MS	37.73	1.5	3.0
** Subtotal **						15.0			128			4.8	19.8
** WBS: 1.2.1.2.5.1.4	Vacuum Pumping, Gauges, Controllers, P.S.												
1	Ion pump, 400 l/s	ea	1	7500.00	A91	7.5	1	4.0	4	MU	35.92	0.1	7.6
2	Ion pump controller	ea	1	2500.00	A91	2.5	0	4.0	0	EI	33.00	0.0	2.5

Technical Components Cost Estimate

ITM NBR	ITM DESCRIPTION	UNIT MEAS	NBR UNITS	UNIT COST	COST BASIS	TOTAL ISC K$	LBR UNTS	HRS/ UNIT	TOTAL HRS	CRAFT CODE	CRAFT RATE	TOTAL LABOR K$	ISC + LABOR K$
3	Ion pump cable,bakeable	ea	1	250.00	A91	0.2	0	0.0	0		0.00	0.0	0.2
4	IEEE-48 cable,3m cntrller	ea	1	150.00	cp	0.1	0	0.0	0		0.00	0.0	0.1
5	Roughing valve	ea	2	650.00	A91	1.3	0	0.0	0		0.00	0.0	1.3
6	Ion gauge & controls	ea	1	3500.00	A91	3.5	1	4.0	4	MU	35.92	0.1	3.6
7	Ion gauge cable, bakeable	ea	1	250.00	cp	0.2	1	4.0	4	EI	33.00	0.1	0.4
8	Junction box,IG cable	ea	1	200.00	eu	0.2	1	4.0	4	EI	33.00	0.1	0.3
9	Interlock cable	ea	1	100.00	eu	0.1	0	0.0	0		0.00	0.0	0.1
** Subtotal **						15.8			16			0.6	16.3
** WBS: 1.2.1.2.5.1.5	Assemble, Bakeout, Test												
1	Assemble & test	ea	1	500.00	eu	0.5	2	80.0	160	MU	35.92	5.7	6.2
2	Bakeout & UHV qualify	lot	1	500.00	eu	0.5	2	40.0	80	MU	35.92	2.9	3.4
3	Survey/calibration		0	0.00		0.0	2	16.0	32	MU	35.92	1.1	1.1
4	Misc tools,fixtures,cart	lot	1	1000.00	eu	1.0	1	80.0	80	MU	35.92	2.9	3.9
** Subtotal **						2.0			352			12.6	14.6
** WBS: 1.2.1.2.5.1.6	Installation												
1	LCW hardware/connections	lot	1	300.00	eu	0.3	2	16.0	32	MU	35.92	1.1	1.4
2	Transport/on-site setup	lot	1	200.00	eu	0.2	2	16.0	32	MU	35.92	1.1	1.3
3	Vac assemble & leak check	lot	1	50.00	eu	0.1	2	16.0	32	MU	35.92	1.1	1.2
4	Installation alignment		0	0.00		0.0	2	16.0	32	MS	37.73	1.2	1.2
5	Mech install/test/debug	lot	1	50.00	eu	0.1	2	16.0	32	MU	35.92	1.1	1.2
6	Elec installation		0	0.00		0.0	1	16.0	16	IEL	62.85	1.0	1.0
** Subtotal **						0.6			176			6.8	7.4
** WBS: 1.2.1.2.5.1.7	Beam Diagnostic Device												
1	Linear drive mech(VGassy)	ea	1	3000.00	cp	3.0	0	0.0	0		0.00	0.0	3.0
2	Mods for water cooling	ea	1	200.00	eu	0.2	1	20.0	20	MS	37.73	0.8	1.0
3	In-vac parts fab	lot	1	1000.00	eu	1.0	1	80.0	80	MS	37.73	3.0	4.0
4	Brazing & welding assy	ea	1	200.00	A91	0.2	1	20.0	20	MS	37.73	0.8	1.0
5	Phosphor coating	ea	1	500.00	eu	0.5	0	0.0	0		0.00	0.0	0.5
** Subtotal **						4.9			120			4.5	9.4
** WBS: 1.2.1.2.5.1.8	Collimating Spool												
1	Spool piece	ea	1	1250.00	A91	1.2	1	8.0	8	MU	35.92	0.3	1.5
2	Misc flanges,UHV hardware	lot	1	500.00	eu	0.5	0	0.0	0		0.00	0.0	0.5
3	Lead shielding & mounting	lot	1	500.00	eu	0.5	1	40.0	40	MS	37.73	1.5	2.0
** Subtotal **						2.2			48			1.8	4.0
** WBS: 1.2.1.2.5.1.9	Bellows												
1	Welded bellows assy	ea	1	3000.00	A91	3.0	1	4.0	4	MS	37.73	0.2	3.2
2	Blank flanges,gaskets,etc	lot	1	300.00	cp	0.3	0	0.0	0		0.00	0.0	0.3
3	Inspection,cleaning,bake	ea	1	50.00	eu	0.1	1	4.0	4	MU	35.92	0.1	0.2
** Subtotal **						3.3			8			0.3	3.6
** WBS: 1.2.1.2.5.1.10	Titanium Sublimation Pump												
1	TSP pump spool piece	ea	1	2700.00	A91	2.7	0	0.0	0		0.00	0.0	2.7
2	TSP filaments&controller	ea	1	3500.00	eu	3.5	1	8.0	8	EI	33.00	0.3	3.8
3	Flanges,& UHV hardware	lot	1	500.00	eu	0.5	0	0.0	0		0.00	0.0	0.5
4	Support post, misc hardwr	lot	1	1500.00	eu	1.5	1	20.0	20	MS	37.73	0.8	2.3
5	Struts & hardware	ea	6	500.00	A91	3.0	6	8.0	48	MU	35.92	1.7	4.7
6	Misc extrusns, mounts,etc	lot	1	1000.00	eu	1.0	1	20.0	20	MS	37.73	0.8	1.8
** Subtotal **						12.2			96			3.5	15.7
** WBS: 1.2.1.2.5.1.11	Isolation Valve												
1	Valve & contrllr proc.	ea	1	15000.00	vq	15.0	0	0.0	0		0.00	0.0	15.0
2	Prelim assembl & test	ea	1	50.00	eu	0.1	1	8.0	8	MU	35.92	0.3	0.3
3	Inspection,cleaning,etc.	lot	1	50.00	eu	0.1	1	4.0	4	MU	35.92	0.1	0.2
4	Cables & connectors	lot	1	200.00	eu	0.2	1	2.0	2	EI	33.00	0.1	0.3

Technical Components Cost Estimate

ITM NBR	ITM DESCRIPTION	UNIT MEAS	NBR UNITS	UNIT COST	COST BASIS	TOTAL ISC K$	LBR UNTS	HRS/ UNIT	TOTAL HRS	CRAFT CODE	CRAFT RATE	TOTAL LABOR K$	ISC LABOR K$
5	Blank flanges & hardware	lot	2	200.00	eu	0.4	0	0.0	0		0.00	0.0	0.4
** Subtotal **						15.7			14			0.5	16.2
** WBS: 1.2.1.2.5.2.1	Fab/Buy Mech Parts & Subassy's												
1	Mirror polishing	ea	1	20300.00	A91	20.3	0	0.0	0		0.00	0.0	20.3
2	Optical coating	ea	1	1000.00	A88	1.0	0	0.0	0		0.00	0.0	1.0
3	Substrate parts machining	lot	1	3000.00	A91	3.0	0	0.0	0		0.00	0.0	3.0
4	Substrate brzng/leak chk	ea	1	200.00	eu	0.2	1	20.0	20	MU	35.92	0.7	0.9
5	Braze & leak chk fixtures	ea	1	200.00	A91	0.2	1	40.0	40	MU	35.92	1.4	1.6
6	UHV mirrr in-vac mounting	ea	1	1000.00	eu	1.0	1	120.0	120	MS	37.73	4.5	5.5
7	Mirror positioning mech	ea	1	1000.00	eu	1.0	1	80.0	80	MS	37.73	3.0	4.0
8	Mirror shippng crate/mnt	ea	1	800.00	A91	0.8	0	32.0	0	MS	37.73	0.0	0.8
9	Misc UHV flanges/hardware	lot	1	1000.00	eu	1.0	0	0.0	0		0.00	0.0	1.0
10	Bellows/conflat ass'y	ea	1	2500.00	A91	2.5	0	0.0	0		0.00	0.0	2.5
11	Tube/joystick ass'y	ea	1	200.00	A86	0.2	1	60.0	60	MS	37.73	2.3	2.5
12	Masks: parts & machining	ea	4	3000.00	A91	12.0	0	0.0	0		0.00	0.0	12.0
13	Masks:Braze & weld assy	ea	4	200.00	A91	0.8	4	40.0	160	MU	35.92	5.7	6.5
14	Lead shielding	ea	1	500.00	eu	0.5	1	40.0	40	MU	35.92	1.4	1.9
** Subtotal **						44.5			520			19.1	63.6
** WBS: 1.2.1.2.5.2.2	Fab/Buy Electrical and Controls												
1	Stepper/encoder/limits	ea	3	2500.00	eu	7.5	3	20.0	60	MS	37.73	2.3	9.8
2	Driver/encoder cables	ea	3	200.00	eu	0.6	3	16.0	48	EI	33.00	1.6	2.2
3	Flow switch & interlocks	ea	1	400.00	eu	0.4	1	4.0	4	EI	33.00	0.1	0.5
4	Module, VME, RS232,B-port	ea	1	800.00	eu	0.8	1	16.0	16	EI	33.00	0.5	1.3
5	Cable, RS232	ea	3	50.00	eu	0.1	0	0.0	0		0.00	0.0	0.1
6	Glow discharg optcl clean	ea	1	10000.00	eu	10.0	1	40.0	40	EI	33.00	1.3	11.3
** Subtotal **						19.5			168			5.8	25.3
** WBS: 1.2.1.2.5.2.3	Fab/Buy Vacuum Chamber & Supports												
1	Custom vacuum chamber	ea	1	10000.00	A91	10.0	0	0.0	0		0.00	0.0	10.0
2	Downstream mask chamber	ea	1	2500.00	cp	2.5	0	0.0	0		0.00	0.0	2.5
3	Misc. flanges/UHV hardwre	lot	1	1000.00	eu	1.0	0	0.0	0		0.00	0.0	1.0
4	Roughing valve	ea	2	650.00	cp	1.3	0	0.0	0		0.00	0.0	1.3
5	Mounting struts/hardware	ea	2	500.00	A91	1.0	2	8.0	16	MS	37.73	0.6	1.6
6	Motorized struts/hardware	ea	4	1000.00	eu	4.0	4	16.0	64	MS	37.73	2.4	6.4
7	Support posts	ea	1	1500.00	A91	1.5	1	40.0	40	MS	37.73	1.5	3.0
8	Pump welded bellws assy	ea	1	4000.00	A91	4.0	0	0.0	0		0.00	0.0	4.0
9	Bellws inspect/clean/bake	ea	1	50.00	eu	0.1	1	4.0	4	MU	35.92	0.1	0.2
** Subtotal **						25.4			124			4.7	30.0
** WBS: 1.2.1.2.5.2.4	Vacuum Pumping, Gauges, Controllers, P.S.												
1	Ion pump, 400 l/s	ea	1	7500.00	A91	7.5	1	8.0	8	MU	35.92	0.3	7.8
2	Ion pump controller	ea	1	2500.00	A91	2.5	1	8.0	8	EI	33.00	0.3	2.8
3	Ion pump cable,bakeable	ea	1	250.00	A91	0.2	0	0.0	0		0.00	0.0	0.2
4	IEEE-48 cable,3m cntrller	ea	1	150.00	cp	0.1	0	0.0	0		0.00	0.0	0.1
5	Ion gauge & controls	ea	1	3500.00	A91	3.5	1	8.0	8	MU	35.92	0.3	3.8
6	Ion gauge cable, bakeable	ea	1	250.00	cp	0.2	1	8.0	8	EI	33.00	0.3	0.5
7	Junction box,IG cable	ea	1	250.00	eu	0.2	0	0.0	0		0.00	0.0	0.2
8	Interlock cable	ea	1	100.00	eu	0.1	0	0.0	0		0.00	0.0	0.1
** Subtotal **						14.5			32			1.1	15.6
** WBS: 1.2.1.2.5.2.5	Assemble, Bakeout, Test												
1	Assemble & test	ea	1	500.00	eu	0.5	1	120.0	120	MS	37.73	4.5	5.0
2	Bakeout & UHV qualify	lot	1	500.00	eu	0.5	1	120.0	120	MU	35.92	4.3	4.8
3	Survey/calibration		0	0.00		0.0	2	16.0	32	MU	35.92	1.1	1.1
4	Misc tools/fixtrs/cart	ea	1	1000.00	eu	1.0	1	80.0	80	MS	37.73	3.0	4.0
** Subtotal **						2.0			352			13.0	15.0

Technical Components Cost Estimate

ITM NBR	ITM DESCRIPTION	UNIT MEAS	NBR UNITS	UNIT COST	COST BASIS	TOTAL ISC K$	LBR UNTS	HRS/ UNIT	TOTAL HRS	CRAFT CODE	CRAFT RATE	TOTAL LABOR K$	ISC + LABOR K$
** WBS: 1.2.1.2.5.2.6	Installation												
1	LCW hardware/connections	lot	1	300.00	eu	0.3	1	16.0	16	MU	35.92	0.6	0.9
2	Transport/on-site setup	lot	1	200.00	eu	0.2	2	16.0	32	MU	35.92	1.1	1.3
3	Vac assemble & leak check	lot	1	50.00	eu	0.1	1	20.0	20	MU	35.92	0.7	0.8
4	Installation alignment		0	0.00		0.0	2	32.0	64	MU	35.92	2.3	2.3
5	Mech install/test/debug	lot	1	500.00	eu	0.5	2	40.0	80	MU	35.92	2.9	3.4
6	Elec installation		0	0.00		0.0	1	20.0	20	IEL	62.85	1.3	1.3
** Subtotal **						1.1			232			8.9	9.9
** WBS: 1.2.1.2.5.2.7	Bellows												
1	Welded bellows assy	ea	1	4000.00	A91	4.0	0	0.0	0		0.00	0.0	4.0
2	Blank flnges,gskts,etc	lot	2	300.00	cp	0.6	0	0.0	0		0.00	0.0	0.6
3	Inspct,clean,prelim bake	ea	2	50.00	eu	0.1	2	4.0	8	MU	35.92	0.3	0.4
** Subtotal **						4.7			8			0.3	5.0
** WBS: 1.2.1.2.5.2.8	Collimating Spool												
1	Spool piece	ea	1	2000.00	A91	2.0	1	8.0	8	MU	35.92	0.3	2.3
2	Misc flanges & UHV hrdwre	ea	1	500.00	eu	0.5	1	8.0	8	MS	37.73	0.3	0.8
3	Lead shielding/mounting	ea	1	500.00	eu	0.5	1	40.0	40	MS	37.73	1.5	2.0
** Subtotal **						3.0			56			2.1	5.1
** WBS: 1.2.1.2.5.2.9	Isolation Valve												
1	Valve & contrllr proc.	ea	1	15000.00	A91	15.0	1	8.0	8	MU	35.92	0.3	15.3
2	Prelim assmble & test	ea	1	50.00	eu	0.1	1	4.0	4	MU	35.92	0.1	0.2
3	Inspect,clean, etc	ea	1	50.00	eu	0.1	1	4.0	4	MU	35.92	0.1	0.2
4	Cables & connectors	lot	1	200.00	eu	0.2	1	2.0	2	EI	33.00	0.1	0.3
5	Blank flanges & hardware	lot	2	200.00	eu	0.4	0	0.0	0		0.00	0.0	0.4
* Subtotal **						15.7			18			0.6	16.3
** WBS: 1.2.1.2.5.3.1	Fab/Buy Mech Parts & Subassy's												
1	Mirror polishing	ea	1	20300.00	A91	20.3	0	0.0	0		0.00	0.0	20.3
2	Optical coating	ea	1	1000.00	A88	1.0	0	0.0	0		0.00	0.0	1.0
3	Substrate parts machining	lot	1	3000.00	A91	3.0	0	0.0	0		0.00	0.0	3.0
4	Substrate brzng/leak chk	ea	1	200.00	eu	0.2	1	40.0	40	MU	35.92	1.4	1.6
5	Braze & leak chk fixtures	ea	1	200.00	A91	0.2	1	40.0	40	MU	35.92	1.4	1.6
6	UHV mirrr in-vac mounting	ea	1	1000.00	eu	1.0	1	120.0	120	MS	37.73	4.5	5.5
7	Mirror positioning mech	ea	1	1000.00	eu	1.0	1	80.0	80	MS	37.73	3.0	4.0
8	Mirror shippng crate/mnt	ea	1	800.00	A91	0.8	1	32.0	32	MS	37.73	1.2	2.0
9	Misc UHV flanges/hardware	lot	1	1000.00	eu	1.0	0	0.0	0		0.00	0.0	1.0
10	Bellows/conflat ass'y	ea	1	2500.00	A91	2.5	0	0.0	0		0.00	0.0	2.5
11	Tube/joystick ass'y	ea	1	200.00	A86	0.2	1	60.0	60	MS	37.73	2.3	2.5
12	Masks: parts & machining	ea	4	3000.00	A91	12.0	0	0.0	0		0.00	0.0	12.0
13	Masks:Braze & weld assy	ea	4	200.00	A91	0.8	4	40.0	160	MU	35.92	5.7	6.5
14	Lead shielding	ea	1	500.00	eu	0.5	1	40.0	40	MU	35.92	1.4	1.9
** Subtotal **						44.5			572			21.1	65.6
** WBS: 1.2.1.2.5.3.2	Fab/Buy Electrical and Controls												
1	Stepper/encoder/limits	ea	3	2500.00	eu	7.5	3	20.0	60	MS	37.73	2.3	9.8
2	Driver/encoder cables	ea	3	200.00	eu	0.6	3	16.0	48	EI	33.00	1.6	2.2
3	Flow switch & interlocks	ea	1	400.00	eu	0.4	1	4.0	4	EI	33.00	0.1	0.5
4	Module, VME, RS232,B-port	ea	1	800.00	eu	0.8	1	16.0	16	EI	33.00	0.5	1.3
5	Cable, RS232	ea	3	50.00	eu	0.1	0	0.0	0		0.00	0.0	0.1
6	Glow discharg optcl clean	ea	1	10000.00	eu	10.0	1	40.0	40	EI	33.00	1.3	11.3
** Subtotal **						19.5			168			5.8	25.3
** WBS: 1.2.1.2.5.3.3	Fab/Buy Vacuum Chamber & Supports												
1	Custom vacuum chamber	ea	1	10000.00	A91	10.0	0	0.0	0		0.00	0.0	10.0
3	Misc. flanges/UHV hardwre	lot	1	1000.00	eu	1.0	0	0.0	0		0.00	0.0	1.0
4	Roughing valve	ea	2	650.00	cp	1.3	0	0.0	0		0.00	0.0	1.3
5	Mounting struts/hardware	ea	3	500.00	A91	1.5	3	8.0	24	MS	37.73	0.9	2.4

Technical Components Cost Estimate

ITM NBR	ITM DESCRIPTION	UNIT MEAS	NBR UNITS	UNIT COST	COST BASIS	TOTAL ISC K$	LBR UNTS	HRS/ UNIT	TOTAL HRS	CRAFT CODE	CRAFT RATE	TOTAL LABOR K$	ISC LABOR K$
6	Motorized struts/hardware	ea	3	1000.00	eu	3.0	3	16.0	48	MS	37.73	1.8	4.8
7	Support posts	ea	1	1500.00	A91	1.5	1	40.0	40	MS	37.73	1.5	3.0
8	Pump welded bellws assy	ea	1	4000.00	A91	4.0	0	0.0	0		0.00	0.0	4.0
9	Bellws inspect/clean/bake	ea	1	50.00	eu	0.1	1	4.0	4	MU	35.92	0.1	0.2
** Subtotal **						22.4			116			4.4	26.7
** WBS: 1.2.1.2.5.3.4	Vacuum Pumping, Gauges, Controllers, P.S.												
1	Ion pump, 400 l/s	ea	1	7500.00	A91	7.5	1	8.0	8	MU	35.92	0.3	7.8
2	Ion pump controller	ea	1	2500.00	A91	2.5	1	8.0	8	EI	33.00	0.3	2.8
3	Ion pump cable,bakeable	ea	1	250.00	A91	0.2	0	0.0	0		0.00	0.0	0.2
4	IEEE-48 cable,3m cntrller	ea	1	150.00	cp	0.1	0	0.0	0		0.00	0.0	0.1
5	Ion gauge & controls	ea	1	3500.00	A91	3.5	1	8.0	8	MU	35.92	0.3	3.8
6	Ion gauge cable, bakeable	ea	1	250.00	cp	0.2	1	8.0	8	EI	33.00	0.3	0.5
7	Junction box,IG cable	ea	1	200.00	eu	0.2	0	0.0	0		0.00	0.0	0.2
8	Interlock cable	ea	1	100.00	eu	0.1	0	0.0	0		0.00	0.0	0.1
9	LCW 0.1deg temp cntrllr	ea	1	2000.00	eu	2.0	0	0.0	0		0.00	0.0	2.0
** Subtotal **						16.4			32			1.1	17.6
** WBS: 1.2.1.2.5.3.5	Assemble, Bakeout, Test												
1	Assemble & test	ea	1	500.00	eu	0.5	1	120.0	120	MS	37.73	4.5	5.0
2	Bakeout & UHV qualify	lot	1	500.00	eu	0.5	1	120.0	120	MU	35.92	4.3	4.8
3	Survey/calibration		0	0.00		0.0	2	16.0	32	MU	35.92	1.1	1.1
4	Misc tools/fixtrs/cart	ea	1	1000.00	eu	1.0	1	80.0	80	MS	37.73	3.0	4.0
** Subtotal **						2.0			352			13.0	15.0
** WBS: 1.2.1.2.5.3.6	Installation												
1	LCW hardware/connections	lot	1	300.00	eu	0.3	1	16.0	16	MU	35.92	0.6	0.9
2	Transport/on-site setup	lot	1	200.00	eu	0.2	2	16.0	32	MU	35.92	1.1	1.3
3	Vac assemble & leak check	lot	1	50.00	eu	0.1	1	20.0	20	MU	35.92	0.7	0.8
4	Installation alignment		0	0.00		0.0	2	32.0	64	MU	35.92	2.3	2.3
5	Mech install/test/debug	lot	1	500.00	eu	0.5	2	40.0	80	MU	35.92	2.9	3.4
6	Elec installation		0	0.00		0.0	1	20.0	20	IEL	62.85	1.3	1.3
** Subtotal **						1.1			232			8.9	9.9
** WBS: 1.2.1.2.5.3.7	Bellows												
1	Welded bellows assy	ea	2	4000.00	A91	8.0	0	0.0	0		0.00	0.0	8.0
2	Blank flnges,gskts,etc	lot	2	300.00	cp	0.6	0	0.0	0		0.00	0.0	0.6
3	Inspct,clean,prelim bake	ea	2	50.00	eu	0.1	2	4.0	8	MU	35.92	0.3	0.4
** Subtotal **						8.7			8			0.3	9.0
** WBS: 1.2.1.2.5.3.8	Collimating Spool												
1	Spool piece	ea	1	1000.00	A91	1.0	1	8.0	8	MU	35.92	0.3	1.3
2	Supprt post&mountng hrdwr	ea	1	1000.00	eu	1.0	1	20.0	20	MS	37.73	0.8	1.8
** Subtotal **						2.0			28			1.0	3.0
** WBS: 1.2.1.2.5.3.9	Isolation Valve												
1	Valve & contrllr proc.	ea	1	15000.00	A91	15.0	1	8.0	8	MU	35.92	0.3	15.3
2	Prelim assmble & test	ea	1	50.00	eu	0.1	1	4.0	4	MU	35.92	0.1	0.2
3	Inspect,clean, etc	ea	1	50.00	eu	0.1	1	4.0	4	MU	35.92	0.1	0.2
4	Cables & connectors	lot	1	200.00	eu	0.2	1	2.0	2	EI	33.00	0.1	0.3
5	Blank flanges & hardware	lot	2	200.00	eu	0.4	0	0.0	0		0.00	0.0	0.4
** Subtotal **						15.7			18			0.6	16.3
** WBS: 1.2.1.2.5.5.1.1	Bellows												
1	Welded bellows assy	ea	2	2500.00	A91	5.0	2	4.0	8	MS	37.73	0.3	5.3
2	Blank flanges,gaskets,etc	lot	2	300.00	cp	0.6	0	0.0	0		0.00	0.0	0.6
3	Inspection,cleaning,bake	ea	2	50.00	eu	0.1	2	4.0	8	MU	35.92	0.3	0.4

Technical Components Cost Estimate

ITM NBR	ITM DESCRIPTION	UNIT MEAS	NBR UNITS	UNIT COST	COST BASIS	TOTAL ISC K$	LBR UNTS	HRS/ UNIT	TOTAL HRS	CRAFT CODE	CRAFT RATE	TOTAL LABOR K$	ISC + LABOR K$
** Subtotal **						5.7			16			0.6	6.3
** WBS: 1.2.1.2.5.5.1.2	Slit Mechanical Assembly												
1	Flanges & flexure plate	ea	1	1000.00	eu	1.0	1	80.0	80	MS	37.73	3.0	4.0
2	Cf feedthrus for elctncs	ea	4	200.00	eu	0.8	0	0.0	0		0.00	0.0	0.8
3	Viewports & mirrors	ea	2	200.00	eu	0.4	2	8.0	16	MS	37.73	0.6	1.0
4	Brazing & fixtures	ea	1	100.00	eu	0.1	1	20.0	20	MU	35.92	0.7	0.8
5	Feedthrus - welding	ea	1	50.00	eu	0.1	1	8.0	8	MS	37.73	0.3	0.4
6	Blades fab/buy	ea	2	5000.00	eu	10.0	0	0.0	0		0.00	0.0	10.0
7	LCW hardware	ea	1	100.00	eu	0.1	1	8.0	8	MU	35.92	0.3	0.4
8	Micrometer mech	ea	1	1000.00	eu	1.0	1	20.0	20	MS	37.73	0.8	1.8
9	Outside vac mntng hrdware	lot	1	500.00	eu6	0.5	1	20.0	20	MS	37.73	0.8	1.3
10	Blade alignment fixtures	lot	1	200.00	eu	0.2	1	20.0	20	MS	37.73	0.8	1.0
** Subtotal **						14.1			192			7.2	21.3
** WBS: 1.2.1.2.5.5.1.3	Support Systems												
1	Slit assy mntng hardwre	ea	6	1000.00	eu	6.0	6	8.0	48	MS	37.73	1.8	7.8
2	Support post & hardware	ea	1	500.00	eu	0.5	1	40.0	40	MS	37.73	1.5	2.0
3	Struts & mntng hardwre	ea	6	500.00	eu	3.0	6	8.0	48	MS	37.73	1.8	4.8
4	Support post & hardware	ea	1	300.00	eu	0.3	1	20.0	20	MS	37.73	0.8	1.1
** Subtotal **						9.8			156			5.9	15.7
** WBS: 1.2.1.2.5.5.1.4	Spools												
1	Diagnostic spool piece	ea	1	2000.00	eu	2.0	0	0.0	0		0.00	0.0	2.0
2	Collmtng spool piece	ea	1	1250.00	A91	1.2	1	8.0	8	MU	35.92	0.3	1.5
3	Misc flanges & UHV hardwr	lot	1	500.00	eu	0.5	0	0.0	0		0.00	0.0	0.5
4	Lead shielding & mounting	ea	1	500.00	eu	0.5	1	40.0	40	MS	37.73	1.5	2.0
* Subtotal **						4.2			48			1.8	6.0
** WBS: 1.2.1.2.5.5.1.5	Vacuum System												
1	Ion pump 120 l/s	ea	1	4000.00	A91	4.0	1	4.0	4	MU	35.92	0.1	4.1
2	Ion pump controller	ea	1	1600.00	A91	1.6	1	4.0	4	EI	33.00	0.1	1.7
3	Ion pump cable, bakeable	ea	1	250.00	cp	0.2	0	0.0	0		0.00	0.0	0.2
4	IEEE-48 cable, 3m cntrllr	ea	1	150.00	cp	0.1	0	0.0	0		0.00	0.0	0.1
5	Roughing valve	ea	2	650.00	A91	1.3	0	0.0	0		0.00	0.0	1.3
6	Ion gauge & controls	ea	1	3500.00	A91	3.5	1	4.0	4	MU	35.92	0.1	3.6
7	Ion gauge cable, bakeable	ea	1	250.00	cp	0.2	1	4.0	4	EI	33.00	0.1	0.4
8	Junction box, IG cable	ea	1	200.00	eu	0.2	1	4.0	4	EI	33.00	0.1	0.3
9	Interlock cable	ea	1	100.00	eu	0.1	0	0.0	0		0.00	0.0	0.1
** Subtotal **						11.3			20			0.7	12.0
** WBS: 1.2.1.2.5.5.1.6	Isolation Valve												
1	Valve & controller proc	ea	1	10000.00	vq	10.0	0	0.0	0		0.00	0.0	10.0
2	Prelim assemble & test	ea	1	50.00	eu	0.1	1	8.0	8	MU	35.92	0.3	0.3
3	Inspect,clean,etc	ea	1	50.00	eu	0.1	1	4.0	4	MU	35.92	0.1	0.2
4	Cables & connectors	ea	1	200.00	eu	0.2	1	2.0	2	EI	33.00	0.1	0.3
5	Blank flanges & hardware	lot	2	200.00	eu	0.4	0	0.0	0		0.00	0.0	0.4
** Subtotal **						10.7			14			0.5	11.2
** WBS: 1.2.1.2.5.5.1.7	Assemble and Test												
1	Assemble & test	ea	1	500.00	eu	0.5	2	40.0	80	MU	35.92	2.9	3.4
2	Bakeout & UHV qualify	ea	1	500.00	eu	0.5	2	40.0	80	MU	35.92	2.9	3.4
3	Survey & calibrate		0	0.00		0.0	2	16.0	32	MU	35.92	1.1	1.1
4	Misc tools, fixtures,cart	lot	1	500.00	eu8	0.5	1	40.0	40	MS	37.73	1.5	2.0
** Subtotal **						1.5			232			8.4	9.9
** WBS: 1.2.1.2.5.5.1.8	Install and Align												
1	LCW hardware & cnnections	lot	1	300.00	eu8	0.3	1	16.0	16	MU	35.92	0.6	0.9
2	Transport & onsite setup	ea	1	200.00	eu	0.2	2	16.0	32	MU	35.92	1.1	1.3

Technical Components Cost Estimate

ITM NBR	ITM DESCRIPTION	UNIT MEAS	NBR UNITS	UNIT COST	COST BASIS	TOTAL ISC K$	LBR UNTS	HRS/ UNIT	TOTAL HRS	CRAFT CODE	CRAFT RATE	TOTAL LABOR K$	ISC + LABOR K$
3	Vac assmble & leak check	ea	1	50.00	eu8	0.1	2	20.0	40	MU	35.92	1.4	1.5
4	Installation alignment		0	0.00		0.0	2	32.0	64	MU	35.92	2.3	2.3
5	Mech install/test/debug	lot	1	500.00	eu	0.5	2	20.0	40	MU	35.92	1.4	1.9
6	Elec installation		0	0.00		0.0	1	20.0	20	IEL	62.85	1.3	1.3
** Subtotal **						1.1			212			8.2	9.2
** WBS: 1.2.1.2.5.5.2.1	Bellows												
1	Welded bellows assy	ea	2	2500.00	A91	5.0	2	4.0	8	MS	37.73	0.3	5.3
2	Blank flanges & gaskets	lot	2	300.00	cp	0.6	0	0.0	0		0.00	0.0	0.6
3	Inspect,clean,bakeout	ea	2	50.00	eu	0.1	2	4.0	8	MU	35.92	0.3	0.4
** Subtotal **						5.7			16			0.6	6.3
** WBS: 1.2.1.2.5.5.2.2	Gratings												
1	Brazed substrate parts	ea	3	3500.00	A91	10.5	0	0.0	0		0.00	0.0	10.5
2	Substrate brazing,welding	ea	3	200.00	A91	0.6	3	20.0	60	MU	35.92	2.2	2.8
3	Misc leak & flow tests	ea	3	100.00	A91	0.3	3	8.0	24	MU	35.92	0.9	1.2
4	Polishing	ea	3	20000.00	A91	60.0	0	0.0	0		0.00	0.0	60.0
5	Ruling	ea	3	15000.00	eu	45.0	0	0.0	0		0.00	0.0	45.0
6	Optical coatings	ea	3	1000.00	eu	3.0	0	0.0	0		0.00	0.0	3.0
7	Shipping & handling	ea	3	200.00	eu	0.6	4	4.0	16	MU	35.92	0.6	1.2
** Subtotal **						120.0			100			3.6	123.6
** WBS: 1.2.1.2.5.5.2.3	Grating Mechanical Assembly												
1	Invac mounting hardware	ea	1	20000.00	eu	20.0	1	800.0	800	MS	37.73	30.2	50.2
2	Scan drive mechanism	ea	1	5000.00	eu	5.0	1	200.0	200	MS	37.73	7.5	12.5
3	Slide	ea	1	20000.00	A87	20.0	0	0.0	0		0.00	0.0	20.0
4	Grating intrchnge actuatr	ea	1	2000.00	A87	2.0	1	80.0	80	MS	37.73	3.0	5.0
5	Alignmnt manipulator	ea	1	2000.00	A87	2.0	1	80.0	80	MS	37.73	3.0	5.0
** Subtotal **						49.0			1160			43.8	92.8
** WBS: 1.2.1.2.5.5.2.4	Mask & VBDA												
1	Blade mechanism	ea	2	1000.00	eu	2.0	2	80.0	160	MS	37.73	6.0	8.0
2	Vacuum housing	ea	1	2000.00	eu	2.0	0	0.0	0		0.00	0.0	2.0
3	Manual actuator/micometer	ea	2	1500.00	eu	3.0	2	20.0	40	MS	37.73	1.5	4.5
4	LCW hardware	ea	1	500.00	cp	0.5	1	20.0	20	MS	37.73	0.8	1.3
5	Misc parts & tools	lot	1	1000.00	eu	1.0	1	40.0	40	MS	37.73	1.5	2.5
** Subtotal **						8.5			260			9.8	18.3
** WBS: 1.2.1.2.5.5.2.5	Electrical & Controls												
1	Scan drive electronics	ea	1	40000.00	A87	40.0	0	0.0	0		0.00	0.0	40.0
2	Interferometer positionng	ea	1	25000.00	A87	25.0	0	0.0	0		0.00	0.0	25.0
3	Glow dschrge optcl cleang	ea	1	10000.00	eu	10.0	1	16.0	16	EI	33.00	0.5	10.5
** Subtotal **						75.0			16			0.5	75.5
** WBS: 1.2.1.2.5.5.2.6	Vacuum System												
1	Ion pump 400 l/s	ea	1	7500.00	A91	7.5	1	4.0	4	MU	35.92	0.1	7.6
2	Ion pump heater	ea	1	1000.00	A91	1.0	1	4.0	4	EI	33.00	0.1	1.1
3	Ion pump controller	ea	1	2500.00	A91	2.5	1	4.0	4	EI	33.00	0.1	2.6
4	Ion pump cable,bakeable	ea	1	250.00	A91	0.2	0	0.0	0		0.00	0.0	0.2
5	IEEE-48 cable, 3 meter	ea	1	150.00	cp	0.1	0	0.0	0		0.00	0.0	0.1
6	Roughing valve	ea	2	650.00	A91	1.3	0	0.0	0		0.00	0.0	1.3
7	Ion gauge & controls	ea	1	3500.00	A91	3.5	1	4.0	4	MU	35.92	0.1	3.6
8	Ion gauge cable,bakeable	ea	1	250.00	cp	0.2	1	4.0	4	EI	33.00	0.1	0.4
9	Junction box, IG cable	ea	1	200.00	eu	0.2	1	4.0	4	EI	33.00	0.1	0.3
10	Interlock cable	ea	1	100.00	eu	0.1	0	0.0	0		0.00	0.0	0.1
11	TSP pump spool piece	ea	1	3000.00	A91	3.0	0	0.0	0		0.00	0.0	3.0
12	TSP filaments/controller	ea	1	3500.00	eu	3.5	1	8.0	8	EI	33.00	0.3	3.8
13	Flanges & UHV hardware	lot	1	500.00	eu	0.5	0	0.0	0		0.00	0.0	0.5
14	Support stand misc hardwr	ea	1	500.00	eu	0.5	1	20.0	20	MS	37.73	0.8	1.3
15	Pump welded bellws assy	ea	1	2500.00	A91	2.5	0	0.0	0		0.00	0.0	2.5

Technical Components Cost Estimate

ITM NBR	ITM DESCRIPTION	UNIT MEAS	NBR UNITS	UNIT COST COST	BASIS	TOTAL ISC K$	LBR UNTS	HRS/ UNIT	TOTAL HRS	CRAFT CODE	CRAFT RATE	TOTAL LABOR K$	ISC + LABOR K$
16	Bellows inspect,clean,bak	ea	1	50.00	eu	0.1	1	4.0	4	MU	35.92	0.1	0.2
17	Misc extrusions,mounting	lot	1	1000.00	eu	1.0	1	20.0	20	MS	37.73	0.8	1.8
** Subtotal **						27.8			76			2.7	30.5
** WBS: 1.2.1.2.5.5.2.7	Support Systems												
1	Grating chamber	ea	1	40000.00	A88	40.0	1	800.0	800	MS	37.73	30.2	70.2
2	Struts & mounting hardwre	ea	6	1000.00	eu	6.0	6	8.0	48	MS	37.73	1.8	7.8
3	Support stand & hardware	ea	1	2000.00	eu	2.0	1	80.0	80	MS	37.73	3.0	5.0
4	Misc blank-off flanges	lot	8	500.00	cp	4.0	0	0.0	0		0.00	0.0	4.0
5	Misc UHV tools,parts,etc	lot	1	2500.00	eu	2.5	1	40.0	40	MS	37.73	1.5	4.0
** Subtotal **						54.5			968			36.5	91.0
** WBS: 1.2.1.2.5.5.2.8	Assemble & Test												
1	Assemble grating BDA	ea	1	500.00	eu	0.5	2	80.0	160	MS	37.73	6.0	6.5
2	Assemble grating mounting	ea	1	500.00	A88	0.5	2	80.0	160	MS	37.73	6.0	6.5
3	Assemble drive mechanism	ea	1	500.00	A88	0.5	2	80.0	160	MS	37.73	6.0	6.5
4	Assemble grating chamber	ea	1	500.00	A88	0.5	2	80.0	160	MS	37.73	6.0	6.5
5	Bakeout & UHV qualify	ea	1	500.00	eu	0.5	2	80.0	160	MU	35.92	5.7	6.2
6	Survey/calibration		0	0.00		0.0	2	16.0	32	MU	35.92	1.1	1.1
7	Misc tools,fixtures,cart	lot	1	1000.00	eu	1.0	1	40.0	40	MS	37.73	1.5	2.5
** Subtotal **						3.5			872			32.6	36.1
** WBS: 1.2.1.2.5.5.2.9	Install & Align												
1	LCW hardware & connctions	ea	1	300.00	eu	0.3	1	16.0	16	MU	35.92	0.6	0.9
2	Transport & onsite setup	ea	1	500.00	eu	0.5	2	40.0	80	MU	35.92	2.9	3.4
3	Vac assemble & leakcheck	ea	1	50.00	eu	0.1	2	40.0	80	MU	35.92	2.9	2.9
4	Installation alignment		0	0.00		0.0	2	40.0	80	MU	35.92	2.9	2.9
5	Mech install,test,debug	ea	1	500.00	eu	0.5	2	40.0	80	MU	35.92	2.9	3.4
6	Electrical installation		0	0.00		0.0	1	40.0	40	IEL	62.85	2.5	2.5
** Subtotal **						1.4			376			14.6	15.9
** WBS: 1.2.1.2.5.5.3.1	Bellows												
1	Welded bellows assy	ea	2	8000.00	A86	16.0	2	4.0	8	MS	37.73	0.3	16.3
2	Inspection,cleaning,bake	ea	2	50.00	eu	0.1	2	4.0	8	MU	35.92	0.3	0.4
3	Anti-sag supports	ea	2	1000.00	eu	2.0	2	60.0	120	MS	37.73	4.5	6.5
** Subtotal **						18.1			136			5.1	23.2
** WBS: 1.2.1.2.5.5.3.2	Isolation Valves												
1	Valve & controller proc.	ea	2	10000.00	vq	20.0	0	0.0	0		0.00	0.0	20.0
2	Prelim assemble & test	lot	2	50.00	eu	0.1	2	8.0	16	MU	35.92	0.6	0.7
3	Inspection, clean,bake	lot	2	50.00	eu	0.1	2	4.0	8	MU	35.92	0.3	0.4
4	Cables & connectors	lot	2	200.00	eu	0.4	2	2.0	4	EI	33.00	0.1	0.5
5	Blank flanges & hardware	lot	4	200.00	eu	0.8	0	0.0	0		0.00	0.0	0.8
** Subtotal **						21.4			28			1.0	22.4
** WBS: 1.2.1.2.5.5.3.3	Vacuum System												
1	Ion pump 60 l/s	ea	1	2700.00	A91	2.7	1	4.0	4	MU	35.92	0.1	2.8
2	Ion pump controller	ea	1	1600.00	A91	1.6	1	4.0	4	EI	33.00	0.1	1.7
3	Ion pump cable,bakeable	ea	1	250.00	A91	0.2	0	0.0	0		0.00	0.0	0.2
4	IEEE-48 cable, 3 m	ea	1	150.00	cp	0.1	0	0.0	0		0.00	0.0	0.1
5	Roughing valve	ea	2	650.00	A91	1.3	0	0.0	0		0.00	0.0	1.3
6	Ion gauge & controls	ea	1	3500.00	A91	3.5	1	4.0	4	MU	35.92	0.1	3.6
7	Ion gauge cable, bakeable	ea	1	250.00	cp	0.2	1	4.0	4	EI	33.00	0.1	0.4
8	Junction box, IG cable	ea	1	200.00	eu	0.2	1	4.0	4	EI	33.00	0.1	0.3
9	Interlock cable	ea	1	100.00	eu	0.1	0	0.0	0		0.00	0.0	0.1
10	Spool pieces	ea	3	2000.00	eu	6.0	0	0.0	0		0.00	0.0	6.0
** Subtotal **						16.0			20			0.7	16.7

Technical Components Cost Estimate

ITM NBR	ITM DESCRIPTION	UNIT MEAS	NBR UNITS	UNIT COST	COST BASIS	TOTAL ISC K$	LBR UNTS	HRS/ UNIT	TOTAL HRS	CRAFT CODE	CRAFT RATE	TOTAL LABOR K$	ISC LABOR K$
** WBS: 1.2.1.2.5.5.3.4	Slit Mechanical Assembly												
1	Flanges & flexure plate	ea	1	1000.00	eu	1.0	1	80.0	80	MS	37.73	3.0	4.0
2	CF feed-thrus for elctncs	ea	4	200.00	eu	0.8	0	0.0	0		0.00	0.0	0.8
3	Viewports & mirrors	ea	2	200.00	eu	0.4	2	8.0	16	MS	37.73	0.6	1.0
4	Brazing & fixtures	ea	1	100.00	eu	0.1	1	20.0	20	MU	35.92	0.7	0.8
5	Feedthrus welding	ea	1	50.00	eu	0.1	1	8.0	8	MS	37.73	0.3	0.4
6	Blades fab/buy	ea	2	200.00	eu	0.4	2	20.0	40	MS	37.73	1.5	1.9
8	LCW hardware	ea	1	100.00	eu	0.1	1	8.0	8	MU	35.92	0.3	0.4
9	Micrometer mechanism	ea	1	1000.00	eu	1.0	1	20.0	20	MS	37.73	0.8	1.8
10	Outside vac mnting hardwr	ea	1	500.00	eu	0.5	1	20.0	20	MS	37.73	0.8	1.3
11	Blade alignment fixtures	lot	1	200.00	eu	0.2	1	20.0	20	MS	37.73	0.8	1.0
12	Exit slit motion system	ea	1	60000.00	A87	60.0	0	0.0	0		0.00	0.0	60.0
** Subtotal **						64.5			232			8.7	73.3
** WBS: 1.2.1.2.5.5.3.5	Support Systems												
1	Slit assy mounting hardwr	ea	6	1000.00	eu	6.0	6	8.0	48	MS	37.73	1.8	7.8
2	Support post & hardware	ea	1	1000.00	eu	1.0	1	40.0	40	MS	37.73	1.5	2.5
** Subtotal **						7.0			88			3.3	10.3
** WBS: 1.2.1.2.5.5.3.6	Assemble & Test												
1	Assemble & test	ea	1	500.00	eu	0.5	1	120.0	120	MU	35.92	4.3	4.8
2	Bakeout & UHV qualify	ea	1	500.00	eu	0.5	1	120.0	120	MU	35.92	4.3	4.8
3	Survey/calibration		0	0.00		0.0	2	16.0	32	MU	35.92	1.1	1.1
4	Misc tools,fixtures,cart	lot	1	500.00	eu	0.5	1	40.0	40	MS	37.73	1.5	2.0
** Subtotal **						1.5			312			11.3	12.8
** WBS: 1.2.1.2.5.5.3.7	Install & Align												
1	Transport & onsite setup	lot	1	200.00	eu	0.2	2	16.0	32	MU	35.92	1.1	1.3
2	Vac assmble & leakcheck	ea	1	50.00	eu	0.1	2	20.0	40	MU	35.92	1.4	1.5
3	Installation alignment		0	0.00		0.0	2	32.0	64	MU	35.92	2.3	2.3
4	Mech install,test,debug	ea	1	500.00	eu	0.5	2	20.0	40	MU	35.92	1.4	1.9
5	Electrical installation		0	0.00		0.0	1	20.0	20	IEL	62.85	1.3	1.3
** Subtotal **						0.8			196			7.6	8.3
** WBS: 1.2.1.2.5.8.1	Fab/Buy Mech Parts & Subassy's												
1	Linear device mech	ea	1	4000.00	cp	4.0	0	0.0	0		0.00	0.0	4.0
2	Mods for water cooling	ea	1	200.00	eu	0.2	1	20.0	20	MS	37.73	0.8	1.0
3	In-vac part fab.	ea	1	1000.00	eu	1.0	1	80.0	80	MS	37.73	3.0	4.0
4	Brazing & welding assy	ea	1	200.00	A91	0.2	1	20.0	20	MS	37.73	0.8	1.0
5	Detector,feedthru,phosphr	ea	1	500.00	eu	0.5	1	40.0	40	MS	37.73	1.5	2.0
** Subtotal **						5.9			160			6.0	11.9
** WBS: 1.2.1.2.5.8.3	Fab/Buy Vacuum Chamber & Supports												
1	Spool piece	ea	2	2000.00	eu	4.0	0	0.0	0		0.00	0.0	4.0
2	Struts & Mounting hardwar	ea	6	500.00	eu	3.0	6	8.0	48	MS	37.73	1.8	4.8
3	Support post & hardware	ea	1	300.00	eu	0.3	1	20.0	20	MS	37.73	0.8	1.1
4	Misc flanges & feedthrus	lot	1	2000.00	eu	2.0	1	20.0	20	MS	37.73	0.8	2.8
** Subtotal **						9.3			88			3.3	12.6
** WBS: 1.2.1.2.5.8.4	Vacuum Pumping, Gauges, Controllers, P.S.												
1	Ion pump, 60l/s	ea	1	2700.00	A91	2.7	1	4.0	4	MU	35.92	0.1	2.8
2	Ion pump controller	ea	1	1600.00	A91	1.6	1	4.0	4	EI	33.00	0.1	1.7
3	Ion pump cable, bakeable	ea	1	250.00	A91	0.2	0	0.0	0		0.00	0.0	0.2
4	IEEE-488 cable, 3m	ea	1	150.00	cp	0.1	0	0.0	0		0.00	0.0	0.1
5	Roughing valve	ea	2	650.00	A91	1.3	0	0.0	0		0.00	0.0	1.3
6	Ion gauge & contrls	ea	1	3500.00	A91	3.5	1	4.0	4	MU	35.92	0.1	3.6
7	Ion gauge cable, bakeable	ea	1	250.00	cp	0.2	1	4.0	4	EI	33.00	0.1	0.4
8	Junction box, IG cable	ea	1	200.00	eu	0.2	1	4.0	4	EI	33.00	0.1	0.3
9	Interlock cable	ea	1	100.00	eu	0.1	0	0.0	0		0.00	0.0	0.1

Technical Components Cost Estimate

ITM NBR	ITM DESCRIPTION	UNIT MEAS	NBR UNITS	UNIT COST	COST BASIS	TOTAL ISC K$	LBR UNTS	HRS/ UNIT	TOTAL HRS	CRAFT CODE	CRAFT RATE	TOTAL LABOR K$	ISC + LABOR K$
** Subtotal **						10.0			20			0.7	10.7
** WBS: 1.2.1.2.5.8.5	Assemble, Bakeout, Test												
1	Assemble & test	ea	2	500.00	eu	1.0	2	20.0	40	MS	37.73	1.5	2.5
2	Bakeout & UHV qualify	ea	2	500.00	eu	1.0	2	40.0	80	MS	37.73	3.0	4.0
3	Survey/calibration		0	0.00		0.0	2	16.0	32	MS	37.73	1.2	1.2
** Subtotal **						2.0			152			5.7	7.7
** WBS: 1.2.1.2.5.8.6	Installation												
1	Transport & on-site setup		0	0.00		0.0	2	4.0	8	MU	35.92	0.3	0.3
2	Vac assemble & leak check	ea	1	100.00	eu	0.1	2	20.0	40	MU	35.92	1.4	1.5
3	Mech install/test/debug	ea	1	100.00	eu	0.1	2	20.0	40	MU	35.92	1.4	1.5
** Subtotal **						0.2			88			3.2	3.4
** WBS: 1.2.1.2.5.9.1	Fab/Buy Mech Parts & Subassy's												
1	Misc machine shop effort	lot	1	1000.00	eu	1.0	1	40.0	40	MS	37.73	1.5	2.5
2	Misc mech tech & tools	lot	1	1000.00	eu	1.0	1	40.0	40	MU	35.92	1.4	2.4
** Subtotal **						2.0			80			2.9	4.9
** WBS: 1.2.1.2.5.9.2	Fab/Buy Electrical and Controls												
1	Cables,valve actuation &	lot	3	100.00	eu	0.3	3	4.0	12	EI	33.00	0.4	0.7
2	X-connect blocks & frame	ea	1	500.00	eu	0.5	1	24.0	24	EI	33.00	0.8	1.3
3	Relays blocks & frame	ea	1	580.00	cp	0.6	1	24.0	24	EI	33.00	0.8	1.4
4	48 channel opto-isolators	ea	1	700.00	cp	0.7	1	24.0	24	EI	33.00	0.8	1.5
5	Cable trays, conduit, etc	lot	1	2000.00	eu	2.0	1	120.0	120	IEL	62.85	7.5	9.5
6	Double elec. rack	ea	1	1300.00	cp	1.3	1	16.0	16	EI	33.00	0.5	1.8
7	BA panel 3 ph 30A	ea	1	50.00	eu	0.1	1	16.0	16	EI	33.00	0.5	0.6
8	Breaker panel	ea	2	200.00	eu	0.4	2	2.0	4	EI	33.00	0.1	0.5
9	Plug strip	ea	2	20.00	eu	0.0	2	1.0	2	EI	33.00	0.1	0.1
10	Rack fans	ea	2	50.00	eu	0.1	2	2.0	4	EI	33.00	0.1	0.2
11	Misc. hardware	lot	1	1000.00	eu	1.0	1	40.0	40	EI	33.00	1.3	2.3
12	Programmabl logic cntrllr	ea	1	8000.00	eu	8.0	1	40.0	40	CP	59.40	2.4	10.4
13	PLC Cabling	ea	1	500.00	eu	0.5	1	20.0	20	EI	33.00	0.7	1.2
14	Operator Console	ea	1	8000.00	eu	8.0	0	0.0	0		0.00	0.0	8.0
15	Branch line device server		0	0.00		0.0	0	0.0	0		0.00	0.0	0.0
16	VME crate w/power spply	ea	1	3000.00	cp	3.0	1	0.0	0		0.00	0.0	3.0
17	VME processor	ea	1	3500.00	cp	3.5	0	40.0	0	CP	59.40	0.0	3.5
18	IEEE-48 module	ea	1	800.00	cp	0.8	0	0.0	0		0.00	0.0	0.8
19	Real time O/S	ea	1	500.00	cp	0.5	0	0.0	0		0.00	0.0	0.5
20	Network interface		0	0.00		0.0	0	0.0	0		0.00	0.0	0.0
21	Ethernet router	ea	1	2000.00	eu	2.0	1	20.0	20	EI	33.00	0.7	2.7
22	Ethernet distribution	ea	1	2000.00	eu	2.0	0	0.0	0		0.00	0.0	2.0
23	Cables, thicknet	ea	5	200.00	eu	1.0	0	0.0	0		0.00	0.0	1.0
24	Display/control station		0	0.00		0.0	0	0.0	0		0.00	0.0	0.0
25	Display station	ea	1	10000.00	eu	10.0	0	0.0	0		0.00	0.0	10.0
26	Display software	ea	1	3000.00	eu	3.0	1	40.0	40	CP	59.40	2.4	5.4
27	TV display controls		0	0.00		0.0	0	0.0	0		0.00	0.0	0.0
28	TV monitor	ea	1	500.00	eu	0.5	0	0.0	0		0.00	0.0	0.5
29	TV patch panel	ea	1	200.00	eu	0.2	1	20.0	20	EI	33.00	0.7	0.9
30	TV scanner	ea	1	1000.00	eu	1.0	0	0.0	0		0.00	0.0	1.0
31	TV camera	ea	6	500.00	eu	3.0	0	0.0	0		0.00	0.0	3.0
32	Cabling, patch	ea	6	20.00	eu	0.1	0	0.0	0		0.00	0.0	0.1
33	24VDC power distribution		0	0.00		0.0	0	0.0	0		0.00	0.0	0.0
34	24VDC power supply	ea	1	2000.00	eu	2.0	1	20.0	20	EI	33.00	0.7	2.7
35	24VDC distribution	ea	1	2000.00	eu	2.0	1	40.0	40	EI	33.00	1.3	3.3
** Subtotal **						58.1			486			21.7	79.8
** WBS: 1.2.1.2.5.9.3	Fab/Buy Vacuum Chamber & Supports												
1	Misc flanges,viewprts,etc	lot	1	3000.00	eu	3.0	0	0.0	0		0.00	0.0	3.0
2	Roughing valve	ea	4	650.00	cp	2.6	0	0.0	0		0.00	0.0	2.6
3	Misc. unistrut/hardware	lot	1	500.00	eu	0.5	1	40.0	40	MU	35.92	1.4	1.9

Technical Components Cost Estimate

ITM NBR	ITM DESCRIPTION	UNIT MEAS	NBR UNITS	UNIT COST COST	BASIS	TOTAL ISC K$	LBR UNTS	HRS/ UNIT	TOTAL HRS	CRAFT CODE	CRAFT RATE	TOTAL LABOR K$	ISC LABOR K$
** Subtotal **						6.1			40			1.4	7.5
** WBS: 1.2.1.2.5.9.5	Assemble, Bakeout, Test												
1	Misc assemble & test	ea	1	1000.00	eu	1.0	2	80.0	160	MU	35.92	5.7	6.7
2	Misc bakeout/UHV qualify	lot	1	1000.00	eu	1.0	2	80.0	160	MU	35.92	5.7	6.7
3	Survey/calibration		0	0.00		0.0	3	32.0	96	MU	35.92	3.4	3.4
** Subtotal **						2.0			416			14.9	16.9
** WBS: 1.2.1.2.5.9.6	Installation												
1	Transport & on-site setup	lot	1	100.00	eu	0.1	2	40.0	80	MU	35.92	2.9	3.0
2	Vac assmble & leak checks	lot	1	500.00	eu	0.5	2	40.0	80	MU	35.92	2.9	3.4
4	Lead shielding installatn	lot	1	200.00	eu	0.2	1	40.0	40	MU	35.92	1.4	1.6
5	Installation alignment		0	0.00		0.0	3	32.0	96	MU	35.92	3.4	3.4
6	Pneumatic service	ea	1	1000.00	eu	1.0	1	40.0	40	MU	35.92	1.4	2.4
7	LCW service	lot	1	1000.00	eu	1.0	1	40.0	40	MU	35.92	1.4	2.4
8	Mech install/test/debug	lot	1	100.00	eu	0.1	2	40.0	80	MU	35.92	2.9	3.0
9	Elec installation		0	0.00		0.0	1	40.0	40	IEL	62.85	2.5	2.5
10			0	0.00		0.0	1	40.0	40	EI	33.00	1.3	1.3
** Subtotal **						2.9			536			20.2	23.1
** WBS: 1.2.1.2.5.10	Branch Line Safety Systems												
1	ILC & SBX	ea	2	1500.00	eu	3.0	0	0.0	0		0.00	0.0	3.0
2	Eurocard crate	ea	1	1000.00	eu	1.0	0	0.0	0		0.00	0.0	1.0
3	Key panel	ea	1	300.00	cp	0.3	0	0.0	0		0.00	0.0	0.3
4	Monitor lights panel	ea	6	250.00	cp	1.5	0	0.0	0		0.00	0.0	1.5
5	Push button panel	ea	1	250.00	eu	0.2	0	0.0	0		0.00	0.0	0.2
6	Breaker panel	ea	1	250.00	eu	0.2	0	0.0	0		0.00	0.0	0.2
7	Cables	lot	1	100.00	eu	0.1	0	0.0	0		0.00	0.0	0.1
8	Wiring assembly		0	0.00		0.0	1	80.0	80	EI	33.00	2.6	2.6
9	Misc hardware & locks	lot	1	1000.00	eu	1.0	0	0.0	0		0.00	0.0	1.0
10	Elec installation		0	0.00		0.0	1	40.0	40	IEL	62.85	2.5	2.5
** Subtotal **						7.4			120			5.2	12.6
** WBS: 1.2.1.2.5.11	Bend Magnet Branchline Delay Line												
1	50 Inch Translation Stage	ea	1	50043.00	CP	50.0	0	0.0	0		0.00	0.0	50.0
2	4 Inch Translation Stage	ea	2	3449.00	EU	6.9	0	0.0	0		0.00	0.0	6.9
3	3 Axis Stppr Mtr Contrllr	ea	1	2999.00	CP	3.0	0	0.0	0		0.00	0.0	3.0
4	Driver Card, 4 inch stage	ea	2	846.00	CP	1.7	0	0.0	0		0.00	0.0	1.7
5	Driver Card,50 inch stage	ea	5	26.45	VQ	0.1	0	0.0	0		0.00	0.0	0.1
6	6 Inch Copper Gaskets	ea	2	26.45	VQ	0.1	0	0.0	0		0.00	0.0	0.1
7	8 Inch Flange Bolt Kit	ea	20	28.57	VQ	0.6	0	0.0	0		0.00	0.0	0.6
8	8 Inch Copper Gaskets	ea	10	38.09	VQ	0.4	0	0.0	0		0.00	0.0	0.4
9	End Bellows	ea	2	3650.00	EU	7.3	0	0.0	0		0.00	0.0	7.3
10	Pressure Compnstd Bellows	ea	2	4073.00	EU	8.1	0	0.0	0		0.00	0.0	8.1
11	Straight Pipe, 6" O.D.	ea	2	1137.00	EU	2.3	0	0.0	0		0.00	0.0	2.3
12	30 L/S Ion Pump	ea	2	1878.00	CP	3.8	0	0.0	0		0.00	0.0	3.8
13	60 L/S Ion Pump	ea	2	3359.00	CP	6.7	0	0.0	0		0.00	0.0	6.7
14	120V Heater	ea	4	291.00	CP	1.2	0	0.0	0		0.00	0.0	1.2
15	Pump Power Supply	ea	4	2111.00	CP	8.4	0	0.0	0		0.00	0.0	8.4
16	High Voltage Cable	ea	4	391.00	CP	1.6	0	0.0	0		0.00	0.0	1.6
17	Scissor Assy	ea	4	1077.00	EU	4.3	0	0.0	0		0.00	0.0	4.3
18	Center Gimbal Assy	ea	1	60940.00	EU	60.9	0	0.0	0		0.00	0.0	60.9
19	End Single Axis Gimbal	ea	1	30470.00	EU	30.5	0	0.0	0		0.00	0.0	30.5
20	End Two Axis Gimbal	ea	1	32586.00	EU	32.6	0	0.0	0		0.00	0.0	32.6
21	Tubing Guide	ea	2	2978.00	EU	6.0	0	0.0	0		0.00	0.0	6.0
22	Support Structure	ea	1	15447.00	EU	15.4	0	0.0	0		0.00	0.0	15.4
23	Mirror Cell	ea	4	5290.00	EU	21.2	0	0.0	0		0.00	0.0	21.2
24	Mirrors, MD1 - MD4	ea	4	9649.00	VQ	38.6	0	0.0	0		0.00	0.0	38.6
25	Mirror Coating	ea	4	5279.00	VQ	21.1	0	0.0	0		0.00	0.0	21.1
26	Assembly		0	0.00		0.0	1	800.0	800	MT	27.85	22.3	22.3
27			0	0.00		0.0	1	120.0	120	MS	37.73	4.5	4.5
28	Test		0	0.00		0.0	1	120.0	120	MT	27.85	3.3	3.3

Technical Components Cost Estimate

ITM NBR	ITM DESCRIPTION	UNIT MEAS	NBR UNITS	UNIT COST	COST BASIS	TOTAL ISC K$	LBR UNTS	HRS/ UNIT	TOTAL HRS	CRAFT CODE	CRAFT RATE	TOTAL LABOR K$	ISC + LABOR K$
29	Installation		0	0.00		0.0	1	160.0	160	MT	27.85	4.5	4.5
30			0	0.00		0.0	1	80.0	80	IEL	62.85	5.0	5.0
31			0	0.00		0.0	1	120.0	120	EI	33.00	4.0	4.0
32	Alignment		0	0.00		0.0	1	120.0	120	MT	27.85	3.3	3.3
** Subtotal **						332.7			1520			46.9	379.7
** WBS: 1.2.1.2.5.12.1	Vertical Refocus Mirror												
1	Vertical Refocus Mirror	ea	1	20000.00	eu	20.0	0	0.0	0		0.00	0.0	20.0
2	Piezo-tranducer	ea	1	10000.00	eu	10.0	0	0.0	0		0.00	0.0	10.0
3	Mirror mount	ea	1	5000.00	eu	5.0	1	120.0	120	MS	37.73	4.5	9.5
4	Vacuum vessel	ea	1	10000.00	eu	10.0	0	0.0	0		0.00	0.0	10.0
5	Stand	ea	1	5000.00	eu	5.0	1	80.0	80	MS	37.73	3.0	8.0
6	Ion pump 220 l/s	ea	1	7000.00	eu	7.0	1	8.0	8	MU	35.92	0.3	7.3
7	Ion pump controller	ea	1	2500.00	eu	2.5	1	8.0	8	EI	33.00	0.3	2.8
8	Ion gauge	ea	1	700.00	eu	0.7	1	8.0	8	MU	35.92	0.3	1.0
9	Ion gauge controller	ea	1	2100.00	eu	2.1	1	8.0	8	EI	33.00	0.3	2.4
10	Horizontl deflectn mirror	ea	2	2000.00	eu	4.0	0	0.0	0		0.00	0.0	4.0
11	Mirror mount	ea	1	5000.00	eu	5.0	1	120.0	120	MS	37.73	4.5	9.5
12	Installation	lot	1	200.00	eu	0.2	1	24.0	24	MU	35.92	0.9	1.1
** Subtotal **						71.5			376			14.0	85.5
** WBS: 1.2.1.2.5.12.2	Diagnostic Systems												
1	Diagnostics	ea	1	2000.00	eu	2.0	1	80.0	80	EI	33.00	2.6	4.6
2	Vacuum vessel	ea	1	2000.00	eu	2.0	0	0.0	0		0.00	0.0	2.0
3	Stand	ea	1	2000.00	eu	2.0	1	80.0	80	MS	37.73	3.0	5.0
4	Ion pump 120 l/s	ea	1	4500.00	eu	4.5	1	8.0	8	MU	35.92	0.3	4.8
5	Ion pump controller	ea	1	2500.00	eu	2.5	1	8.0	8	EI	33.00	0.3	2.8
6	Ion gauge	ea	1	700.00	eu	0.7	1	8.0	8	MU	35.92	0.3	1.0
7	Installation	lot	1	200.00	eu	0.2	1	24.0	24	MU	35.92	0.9	1.1
** Subtotal **						13.9			208			7.4	21.3
** WBS: 1.2.1.2.5.12.3	Beam Transport												
1	Bellows	ea	4	1000.00	eu	4.0	4	16.0	64	MU	35.92	2.3	6.3
2	Beam Pipe	ea	4	500.00	eu	2.0	4	8.0	32	MU	35.92	1.1	3.1
3	Isolation valves	ea	3	5000.00	eu	15.0	3	16.0	48	MU	35.92	1.7	16.7
4	Installation	lot	1	200.00	eu	0.2	1	24.0	24	MU	35.92	0.9	1.1
** Subtotal **						21.2			168			6.0	27.2
** WBS: 1.2.2.1.1	U10 Undulator EDI												
1	Engineering		0	0.00		0.0	1	4000.0	4000	ME	59.40	237.6	237.6
2	Design		0	0.00		0.0	1	4000.0	4000	MD	42.25	169.0	169.0
3	S&E	lot	1	16800.00	eu	16.8	0	0.0	0		0.00	0.0	16.8
** Subtotal **						16.8			8000			406.6	423.4
** WBS: 1.2.2.1.2	U10 Front End EDI												
1	Design		0	0.00		0.0	1	2000.0	2000	MD	42.25	84.5	84.5
2	S&E	lot	1	3600.00	eu	3.6	0	0.0	0		0.00	0.0	3.6
** Subtotal **						3.6			2000			84.5	88.1
** WBS: 1.2.2.1.3	U10 Branchline EDI												
1	Engineering		0	0.00		0.0	1	2660.0	2660	ME	59.40	158.0	158.0
2	Design		0	0.00		0.0	1	7970.0	7970	MD	42.25	336.7	336.7
3	S&E	lot	1	30545.00	eu	30.5	0	0.0	0		0.00	0.0	30.5
** Subtotal **						30.5			10630			494.7	525.3
** WBS: 1.2.2.2.1.1.1	Magnetic Material												
1	NDFE Blocks	ea	1150	330.00	VQ	379.5	0	0.0	0		0.00	0.0	379.5
2	Gauges/Field Coils/Holdrs	lot	1	315.00	EU	0.3	1	160.0	160	MU	35.92	5.7	6.1
3	Measurement Prep		0	0.00		0.0	1	20.0	20	EM	33.00	0.7	0.7

Technical Components Cost Estimate

ITM NBR	ITM DESCRIPTION	UNIT MEAS	NBR UNITS	UNIT COST	COST BASIS	TOTAL ISC K$	LBR UNTS	HRS/ UNIT	TOTAL HRS	CRAFT CODE	CRAFT RATE	TOTAL LABOR K$	ISC LABOR K$
4			0	0.00		0.0	1	20.0	20	EE	59.40	1.2	1.2
5	Measurements	LOT	1	105.00	EU	0.1	0	0.0	0		0.00	0.0	0.1
6	3-Axis H.C. Meas		0	0.00		0.0	1150	0.1	138	EM	33.00	4.6	4.6
7	Supervision		0	0.00		0.0	1	100.0	100	EE	59.40	5.9	5.9
** Subtotal **						379.9			438			18.1	398.0
** WBS: 1.2.2.2.1.1.3	Pole Assemblies												
1	Vanadium Permendur	ea	198	120.20	A91	23.8	0	0.0	0		0.00	0.0	23.8
2	Keepers	ea	198	246.00	A91	48.7	0	0.0	0		0.00	0.0	48.7
3	Keeper Inspection	lot	1	1050.00	EU	1.1	198	0.8	148	MM	38.60	5.7	6.8
4	Containers	ea	198	15.75	EU	3.1	0	0.0	0		0.00	0.0	3.1
5	Assy Fixtures	ea	10	52.50	A82	0.5	12	30.0	360	MM	38.60	13.9	14.4
6	Assembly	ea	198	10.50	A82	2.1	198	6.0	1188	MM	38.60	45.9	47.9
7	Pole Assembly Mounts	ea	10	1414.00	A91	14.1	10	24.0	240	MM	38.60	9.3	23.4
** Subtotal **						93.4			1936			74.7	168.2
** WBS: 1.2.2.2.1.1.4	End Pole Assemblies												
1	End Pole Keepers	LOT	1	12157.00	A91	12.2	0	0.0	0		0.00	0.0	12.2
2	NdFe Block Cutting		0	0.00		0.0	24	4.0	96	MS	37.73	3.6	3.6
3	Assembly - Keepers		0	0.00		0.0	8	24.0	192	MA	38.60	7.4	7.4
4	Rotator		0	0.00		0.0	8	32.0	256	MM	38.60	9.9	9.9
5	Rotator Block Cutting		0	0.00		0.0	24	4.0	96	MS	37.73	3.6	3.6
6	Assemble - Rotator		0	0.00		0.0	8	4.0	32	MA	38.60	1.2	1.2
7	Rotator Linkage	ea	8	105.00	EU	0.8	8	4.0	32	MM	38.60	1.2	2.1
8	Manual Rotatr Drv	ea	8	525.00	CP	4.2	8	16.0	128	MM	38.60	4.9	9.1
9			0	0.00		0.0	8	4.0	32	MA	38.60	1.2	1.2
10	End pole mounts/levelers	lot	1	7595.00	A91	7.6	0	0.0	0		0.00	0.0	7.6
** Subtotal **						24.8			864			33.2	58.0
** WBS: 1.2.2.2.1.1.5	Backing Beams												
1	Backing Beams (2)	lot	1	74900.00	A91	74.9	1	50.0	50	MM	38.60	1.9	76.8
2	Flux Shunt	ea	1	6500.00	eu	6.5	1	206.0	206	MA	38.60	8.0	14.5
3	Rigging Hardware	lot	1	900.00	EU	0.9	1	80.0	80	MM	38.60	3.1	4.0
4	Misc.	lot	1	1000.00	eu	1.0	1	80.0	80	MA	38.60	3.1	4.1
5	Shimes	lot	1	100.00	eu	0.1	1	40.0	40	MM	38.60	1.5	1.6
6	Adjusters/guides	lot	1	9257.00	A91	9.3	0	0.0	0		0.00	0.0	9.3
** Subtotal **						92.7			456			17.6	110.3
** WBS: 1.2.2.2.1.1.6	Magnet Structure Assembly												
1	Keeper Pole Mount Assembl	ea	10	235.00	A91	2.4	10	60.0	600	MA	38.60	23.2	25.5
2	End Pole Assembly		0	0.00		0.0	4	16.0	64	MM	38.60	2.5	2.5
3	Pole Mount/Bckg Bm Assy	ea	10	105.00	EU	1.1	10	48.0	480	MA	38.60	18.5	19.6
4	Fiducializing	lot	1	105.00	EU	0.1	2	40.0	80	MA	38.60	3.1	3.2
5	Interferometer Hardware	lot	1	1000.00	eu	1.0	1	80.0	80	MM	38.60	3.1	4.1
** Subtotal **						4.5			1304			50.3	54.8
** WBS: 1.2.2.2.1.1.7	Magnetic Measurements: Mechanical												
1	Coil & Probe Mounts		0	0.00		0.0	1	40.0	40	MU	35.92	1.4	1.4
2	Assembly Section Setup		0	0.00		0.0	12	12.0	144	MA	38.60	5.6	5.6
3	Coils	ea	2	105.00	eu	0.2	2	120.0	240	MU	35.92	8.6	8.8
4	Gap Spacers		0	0.00		0.0	1	24.0	24	MU	35.92	0.9	0.9
5	ID Setup	lot	1	315.00	eu	0.3	1	160.0	160	MA	38.60	6.2	6.5
** Subtotal **						0.5			608			22.7	23.2
** WBS: 1.2.2.2.1.1.8	Magnetic Measurements: Electrical												
1	Setup Assembly Sections		0	0.00		0.0	1	16.0	16	EE	59.40	1.0	1.0
2			0	0.00		0.0	12	4.0	48	ES	33.00	1.6	1.6
3	Data Acquire: Assy Sectns		0	0.00		0.0	12	3.0	36	EE	59.40	2.1	2.1
4			0	0.00		0.0	12	8.0	96	ES	33.00	3.2	3.2
5	Data Analysis:Assy Sectns		0	0.00		0.0	1	80.0	80	EE	59.40	4.8	4.8

Technical Components Cost Estimate

ITM NBR	ITM DESCRIPTION	UNIT MEAS	NBR UNITS	UNIT COST	COST BASIS	TOTAL ISC K$	LBR UNTS	HRS/ UNIT	TOTAL HRS	CRAFT CODE	CRAFT RATE	TOTAL LABOR K$	ISC + LABOR K$
6	Calibrate Null Coil		0	0.00		0.0	1	20.0	20	EE	59.40	1.2	1.2
7			0	0.00		0.0	1	20.0	20	ES	33.00	0.7	0.7
8	Code Software Coil Paramt		0	0.00		0.0	1	8.0	8	CP	59.40	0.5	0.5
9			0	0.00		0.0	1	8.0	8	EE	59.40	0.5	0.5
10	ID Setup: Electronic		0	0.00		0.0	1	16.0	16	EE	59.40	1.0	1.0
11			0	0.00		0.0	1	40.0	40	ES	33.00	1.3	1.3
12	ID Setup: Electrical		0	0.00		0.0	1	40.0	40	ES	33.00	1.3	1.3
13	ID: Data Acquisition		0	0.00		0.0	1	40.0	40	EE	59.40	2.4	2.4
14			0	0.00		0.0	1	240.0	240	ES	33.00	7.9	7.9
15	ID: Data Analysis		0	0.00		0.0	1	40.0	40	EE	59.40	2.4	2.4
16	Data Preparation		0	0.00		0.0	1	80.0	80	ES	33.00	2.6	2.6
17	Q/C Verification		0	0.00		0.0	1	20.0	20	EE	59.40	1.2	1.2
18			0	0.00		0.0	1	20.0	20	ES	33.00	0.7	0.7
19	Shutdown/Storage		0	0.00		0.0	1	20.0	20	EE	59.40	1.2	1.2
20			0	0.00		0.0	1	40.0	40	ES	33.00	1.3	1.3
** Subtotal **						0.0			928			38.6	38.6
** WBS: 1.2.2.2.1.2.1	Support System Fabrication												
1	Support System Assembly	ea	1	55200.00	EU	55.2	1	20.0	20	MA	38.60	0.8	56.0
2	Associated Parts	lot	1	1000.00	EU	1.0	1	80.0	80	MM	38.60	3.1	4.1
3	Miscellaneous	lot	1	1900.00	EU	1.9	1	210.0	210	MM	38.60	8.1	10.0
4	Assembly	lot	1	1800.00	EU	1.8	1	835.0	835	MA	38.60	32.2	34.0
** Subtotal **						59.9			1145			44.2	104.1
** WBS: 1.2.2.2.1.2.2	Drive System Fabrication												
1	Roller Screw Assembly	ea	1	53200.00	A91	53.2	1	32.0	32	MM	38.60	1.2	54.4
2	Spring System	ea	1	1000.00	eu	1.0	1	130.0	130	MM	38.60	5.0	6.0
3	Bearing System	lot	1	900.00	EU	0.9	1	105.0	105	MM	38.60	4.1	5.0
4	Sprocket/Chain System	lot	1	700.00	eu	0.7	1	50.0	50	MM	38.60	1.9	2.6
5	Gear Box & Mtg.	ea	1	1700.00	EU	1.7	1	20.0	20	MM	38.60	0.8	2.5
6	Encoder System	lot	1	500.00	eu	0.5	1	50.0	50	MM	38.60	1.9	2.4
7	Motor Mounting Bracket	ea	1	400.00	eu	0.4	1	40.0	40	MM	38.60	1.5	1.9
8	Fan System	lot	1	200.00	eu	0.2	1	40.0	40	MM	38.60	1.5	1.7
9	Miscellaneous	lot	1	1200.00	EU	1.2	1	235.0	235	MM	38.60	9.1	10.3
10	Assembly	lot	1	900.00	EU	0.9	1	365.0	365	MA	38.60	14.1	15.0
11	Roller Screw Kinematc Mnt	ea	8	1400.00	eu	11.2	1	170.0	170	MM	38.60	6.6	17.8
** Subtotal **						71.9			1237			47.7	119.6
** WBS: 1.2.2.2.1.2.3	Local Temperature Control Fabrication												
1	Frame & Curtain	lot	1	3000.00	EU	3.0	1	200.0	200	MA	38.60	7.7	10.7
2	Blower & Dryer System	lot	1	1100.00	EU	1.1	1	80.0	80	MA	38.60	3.1	4.2
3	Miscellaneous	lot	1	2000.00	EU	2.0	1	40.0	40	MA	38.60	1.5	3.5
4	Electrical Installation	ea	1	200.00	eu	0.2	1	80.0	80	EI	33.00	2.6	2.8
** Subtotal **						6.3			400			15.0	21.3
** WBS: 1.2.2.2.1.3.1	Vacuum Chamber												
1	Vacuum Chamber (1 cm)		0	0.00		0.0	0	0.0	0		0.00	0.0	0.0
2	Material	lbs	2275	2.32	VQ	5.3	0	0.0	0		0.00	0.0	5.3
3	Fabrication	ea	1	58810.00	A91	58.8	0	0.0	0		0.00	0.0	58.8
4		ea	1	55260.00	A91	55.3	0	0.0	0		0.00	0.0	55.3
5	Fabricate Flanges	lot	1	2620.00	A91	2.6	1	120.0	120	MM	38.60	4.6	7.3
6	Fab Flange Transitions	lot	1	1144.00	A91	1.1	6	30.0	180	MM	38.60	6.9	8.1
7	Assemble/Test		0	0.00		0.0	1	320.0	320	MA	38.60	12.4	12.4
8	System Assembly		0	0.00		0.0	1	80.0	80	MA	38.60	3.1	3.1
9	UHV Bakeout		0	0.00		0.0	1	160.0	160	MA	38.60	6.2	6.2
10	Trial Installation		0	0.00		0.0	1	80.0	80	MA	38.60	3.1	3.1
11	Final Installation		0	0.00		0.0	1	120.0	120	MA	38.60	4.6	4.6
12	Vacuum Chamber Inspection		0	0.00		0.0	1	80.0	80	MM	38.60	3.1	3.1
** Subtotal **						123.1			1140			44.0	167.1

Technical Components Cost Estimate

ITM NBR	ITM DESCRIPTION	UNIT MEAS	NBR UNITS	UNIT COST COST	BASIS	TOTAL ISC K$	LBR UNTS	HRS/ UNIT	TOTAL HRS	CRAFT CODE	CRAFT RATE	TOTAL LABOR K$	ISC LABOR K$
** WBS: 1.2.2.2.1.3.2	Pumping Systems & Instrumentation												
1	Photon Stop/TSP Pump	ea	1	21000.00	EU	21.0	0	0.0	0		0.00	0.0	21.0
2	Ion Pump/TSP Combination	ea	3	4200.00	CP	12.6	0	0.0	0		0.00	0.0	12.6
3	90 deg Elbow to Pump	ea	3	610.00	CP	1.8	0	0.0	0		0.00	0.0	1.8
4	Right Angle Valve	ea	2	880.00	CP	1.8	0	0.0	0		0.00	0.0	1.8
5	Aluminum Conflats	ea	5	95.00	CP	0.5	0	0.0	0		0.00	0.0	0.5
6	NEG Electrical Feedthru	ea	2	200.00	eu	0.4	0	0.0	0		0.00	0.0	0.4
7	NEG Strip	ea	2	1340.00	CP	2.7	0	0.0	0		0.00	0.0	2.7
8	NEG Strip Mountng Hardwre	ea	2	312.00	eu	0.6	2	60.0	120	MM	38.60	4.6	5.3
9	NEG Strip Assembly	ea	1	104.00	eu	0.1	2	40.0	80	MA	38.60	3.1	3.2
** Subtotal **						41.5			200			7.7	49.2
** WBS: 1.2.2.2.1.3.3	Support Structure												
1	Vacuum Chamber Support	lot	1	2100.00	EU	2.1	1	160.0	160	MM	38.60	6.2	8.3
2	Ion Pump Supports	ea	3	210.00	EU	0.6	3	20.0	60	MM	38.60	2.3	2.9
3	Installation Fixture	ea	1	525.00	EU	0.5	1	80.0	80	MM	38.60	3.1	3.6
** Subtotal **						3.3			300			11.6	14.8
** WBS: 1.2.2.2.1.3.4	Vacuum Diagnostics												
1	IG Controller	eaa	1	895.00	CP	0.9	1	2.0	2	ES	33.00	0.1	1.0
2	Degas Module	ea	1	157.50	CP	0.2	0	0.0	0		0.00	0.0	0.2
3	Second IG Module	ea	1	78.75	CP	0.1	0	0.0	0		0.00	0.0	0.1
4	Process Control Module	ea	1	367.50	CP	0.4	0	0.0	0		0.00	0.0	0.4
5	Rack Mount	ea	1	52.50	CP	0.1	1	1.0	1	ES	33.00	0.0	0.1
6	Remote I/O Module	ea	1	85.00	CP	0.1	0	0.0	0		0.00	0.0	0.1
7	Dual Convectron Module	ea	1	420.00	CP	0.4	0	0.0	0		0.00	0.0	0.4
8	UHV Electrometer Module	ea	1	420.00	CP	0.4	0	0.0	0		0.00	0.0	0.4
9	IEEE-488 Interface	ea	1	378.00	CP	0.4	0	0.0	0		0.00	0.0	0.4
10	Nude Ion Gauge	ea	1	326.55	CP	0.3	1	1.0	1	MS	37.73	0.0	0.[illegible]
11	IG Cable: 50 feet	ea	1	204.75	CP	0.2	1	1.0	1	ES	33.00	0.0	0.2
12	Convectron Gauge	ea	1	145.95	CP	0.1	1	1.0	1	MS	37.73	0.0	0.2
13	Convectron Cable: 50 feet	ea	1	220.50	CP	0.2	1	1.0	1	ES	33.00	0.0	0.3
14	IG Connector	ea	1	10.50	EU	0.0	1	1.0	1	MS	37.73	0.0	0.0
15	IG Cable Interface	ea	1	52.50	EU	0.1	1	4.0	4	ES	33.00	0.1	0.2
16	Ion Pump Controller	ea	3	2045.40	CP	6.1	3	2.0	6	ES	33.00	0.2	6.3
17	Ion Pump Cable	ea	3	234.15	CP	0.7	3	4.0	12	ES	33.00	0.4	1.1
18	Ion Pump Cable Interface	ea	3	105.00	EU	0.3	3	4.0	12	ES	33.00	0.4	0.7
19	IEEE-488 Interface	ea	3	522.90	CP	1.6	0	0.0	0		0.00	0.0	1.6
20	ILC Crate	ea	1	1000.00	EU	1.0	1	40.0	40	ES	33.00	1.3	2.3
21	ILC	ea	2	1100.00	EU	2.2	1	40.0	40	ES	33.00	1.3	3.5
22	Sublimation Controller	ea	1	2100.00	CP	2.1	1	4.0	4	ES	33.00	0.1	2.2
23	Sublimation Mux	ea	1	2100.00	EU	2.1	1	80.0	80	ES	33.00	2.6	4.7
24	Filament Cables	set	1	525.00	EU	0.5	1	40.0	40	ES	33.00	1.3	1.8
25	NEG Power Supply	ea	1	2000.00	eu	2.0	0	0.0	0		0.00	0.0	2.0
** Subtotal **						22.5			246			8.1	30.6
** WBS: 1.2.2.2.1.4	Motor Control System												
1	Controller 500 Indexer	ea	1	1515.00	CP	1.5	0	0.0	0		0.00	0.0	1.5
2	Motor Package PK130M-T	ea	1	4703.00	CP	4.7	0	0.0	0		0.00	0.0	4.7
3	Absolute Encoder	ea	1	1805.00	CP	1.8	0	0.0	0		0.00	0.0	1.8
4	100 Ft cables	set	1	1000.00	CP	1.0	0	0.0	0		0.00	0.0	1.0
5	ILC	ea	1	1100.00	eu	1.1	0	0.0	0		0.00	0.0	1.1
6	ILC Crate (holds 6 ILCs)	ea	1	1000.00	eu	1.0	0	0.0	0		0.00	0.0	1.0
7	Final Installation	lot	1	4000.00	eu	4.0	1	180.0	180	EI	33.00	5.9	9.9
8	Indexer/Cont.	lot	1	2000.00	eu	2.0	1	60.0	60	IEL	62.85	3.8	5.8
9	Shop Installation	lot	1	3000.00	eu	3.0	1	120.0	120	EI	33.00	4.0	7.0
** Subtotal **						20.1			360			13.7	33.8
** WBS: 1.2.2.2.1.5	Installation												
1	Prepare & Truck to Site	lot	1	525.00	eu	0.5	1	80.0	80	MA	38.60	3.1	3.6
2	Rigger's Work	lot	1	1200.00	eu	1.2	1	64.0	64	RG	37.65	2.4	3.6
3	Survey & Alignment		0	0.00		0.0	1	80.0	80	MA	38.60	3.1	3.1

Technical Components Cost Estimate

ITM NBR	ITM DESCRIPTION	UNIT MEAS	NBR UNITS	UNIT COST COST	BASIS	TOTAL ISC K$	LBR UNTS	HRS/ UNIT	TOTAL HRS	CRAFT CODE	CRAFT RATE	TOTAL LABOR K$	ISC + LABOR K$
4	Installation	lot	1	315.00	eu	0.3	1	100.0	100	MA	38.60	3.9	4.2
5	Vacuum Hookup/Pumpdown	lot	1	105.00	eu	0.1	1	40.0	40	MA	38.60	1.5	1.6
6	Reinstall Temp Ctrl Housg		0	0.00		0.0	1	40.0	40	MA	38.60	1.5	1.5
7	Miscellaneous		0	0.00		0.0	1	50.0	50	MA	38.60	1.9	1.9
** Subtotal **						2.1			454			17.5	19.6
** WBS: 1.2.2.2.2.1.1	Aperture Plate												
1	Water Cooled Absorber	ea	1	800.00	A91	0.8	1	40.0	40	MS	37.73	1.5	2.3
2	Brazing Fixtures/Tooling	LOT	1	200.00	EU	0.2	1	30.0	30	MU	35.92	1.1	1.3
3	Flange Gaskets & Hardware	lot	2	200.00	eu	0.4	1	10.0	10	MS	37.73	0.4	0.8
** Subtotal **						1.4			80			3.0	4.4
** WBS: 1.2.2.2.2.1.2	Bellows												
1	Welded Bellows Assy	ea	1	3000.00	A91	3.0	1	1.0	1	MS	37.73	0.0	3.0
2	Inspect,Clean,Bake	ea	1	50.00	eu	0.1	1	2.0	2	MU	35.92	0.1	0.1
** Subtotal **						3.0			3			0.1	3.2
** WBS: 1.2.2.2.2.1.3	Collimating Spool												
1	Spool Piece	ea	1	1250.00	A91	1.2	1	8.0	8	MU	35.92	0.3	1.5
2	Misc. Flanges/UHV Hardwre	lot	1	500.00	eu	0.5	1	8.0	8	MS	37.73	0.3	0.8
3	Lead Shielding & Mounting	lot	1	500.00	eu	0.5	1	40.0	40	MS	37.73	1.5	2.0
** Subtotal **						2.2			56			2.1	4.3
** WBS: 1.2.2.2.2.1.4	Isolation Valve												
1	Valve & Controller Proc.	ea	1	22140.00	A91	22.1	0	0.0	0		0.00	0.0	22.1
2	Prelim Assemble & Test	lot	1	50.00	ea	0.1	1	8.0	8	MU	35.92	0.3	0.3
3	Inspect/Clean/Etc.	lot	1	50.00	eu	0.1	1	4.0	4	MU	35.92	0.1	0.2
4	Cables & connectors	lot	1	200.00	eu	0.2	1	4.0	4	EI	33.00	0.1	0.3
5	Blank flngs & mntng hrdwr	lot	2	200.00	eu	0.4	1	20.0	20	MS	37.73	0.8	1.2
** Subtotal **						22.8			36			1.3	24.2
** WBS: 1.2.2.2.2.1.5	Support Stand												
1	Support stand, misc. hrdw	ea	1	1500.00	eu	1.5	1	40.0	40	MS	37.73	1.5	3.0
2	Struts & hardware	ea	6	500.00	A91	3.0	6	8.0	48	MU	35.92	1.7	4.7
3	Misc.	lot	1	1000.00	eu	1.0	1	40.0	40	MS	37.73	1.5	2.5
** Subtotal **						5.5			128			4.7	10.2
** WBS: 1.2.2.2.2.1.6	Assemble, Bakeout, Test												
1	Clean parts	lot	1	100.00	eu	0.1	1	16.0	16	MU	35.92	0.6	0.7
2	Final vac assy,leak check	lot	1	100.00	eu	0.1	1	16.0	16	MU	35.92	0.6	0.7
3	Bakeout jackets	ea	1	1500.00	A91	1.5	1	8.0	8	MU	35.92	0.3	1.8
3	Fiducialize		0	0.00		0.0	2	8.0	16	MS	37.73	0.6	0.6
4	RGA scans, UHV pre-qualfy		0	0.00		0.0	1	16.0	16	MS	37.73	0.6	0.6
** Subtotal **						1.7			72			2.6	4.3
** WBS: 1.2.2.2.2.1.7	Installation												
1	Install/check valvs/cntrl	lot	1	200.00	eu	0.2	1	16.0	16	EI	33.00	0.5	0.7
2	Install utilities	lot	1	500.00	eu	0.5	1	16.0	16	MU	35.92	0.6	1.1
3	Install/align supprt stnd	lot	1	200.00	eu	0.2	2	16.0	32	MU	35.92	1.1	1.3
4	Instll/align vac hardware		0	0.00		0.0	2	16.0	32	MU	35.92	1.1	1.1
5	Vac cnnctns, leak check		0	0.00		0.0	2	16.0	32	MU	35.92	1.1	1.1
6	Bakeout		0	0.00		0.0	2	16.0	32	MU	35.92	1.1	1.1
7	Elec. installation		0	0.00		0.0	1	8.0	8	IEL	62.85	0.5	0.5
** Subtotal **						0.9			168			6.2	7.1
** WBS: 1.2.2.2.2.2.1	Fab/Buy Mech Parts & Subassy's												
1	Flange/mntng plate fab	ea	1	600.00	eu	0.6	1	40.0	40	MS	37.73	1.5	2.1
2	CF feed-thrus for electrn	ea	8	200.00	eu	1.6	0	0.0	0		0.00	0.0	1.6

Technical Components Cost Estimate

ITM NBR	ITM DESCRIPTION	UNIT MEAS	NBR UNITS	UNIT COST	COST BASIS	TOTAL ISC K$	LBR UNTS	HRS/ UNIT	TOTAL HRS	CRAFT CODE	CRAFT RATE	TOTAL LABOR K$	ISC LABOR K$
3	Brazing & fixtures	lot	1	100.00	eu	0.1	1	20.0	20	MU	35.92	0.7	0.8
4	Feedthrus welding	lot	1	50.00	eu	0.1	1	20.0	20	MS	37.73	0.8	0.8
5	Blades fab	ea	2	100.00	eu	0.2	2	20.0	40	MS	37.73	1.5	1.7
6	In-vac parts & elec fab	lot	1	200.00	eu	0.2	1	40.0	40	MS	37.73	1.5	1.7
7	LCW hardware	lot	1	100.00	eu	0.1	1	8.0	8	MU	35.92	0.3	0.4
8	2-axis translation mech	ea	1	3000.00	eu	3.0	0	0.0	0		0.00	0.0	3.0
9	Outside vac mntng hardwre	lot	1	500.00	eu	0.5	1	20.0	20	MS	37.73	0.8	1.3
10	Blade alignment fixtures	lot	1	200.00	eu	0.2	1	20.0	20	MS	37.73	0.8	1.0
** Subtotal **						6.6			208			7.8	14.3
** WBS: 1.2.2.2.2.2.2	Fab/Buy Electrical and Controls												
1	Bias power supply	ea	2	3000.00	eu	6.0	2	8.0	16	EI	33.00	0.5	6.5
2	ILC & SBX	ea	3	1500.00	eu	4.5	3	20.0	60	EI	33.00	2.0	6.5
3	Electrometer	ea	2	1695.00	cp	3.4	2	8.0	16	EI	33.00	0.5	3.9
4	Eurocard crate	ea	1	1000.00	eu	1.0	1	16.0	16	EI	33.00	0.5	1.5
5	Thermocouples & controls	ea	2	500.00	eu	1.0	2	8.0	16	EI	33.00	0.5	1.5
6	Stepper motor controller	ea	1	3000.00	eu	3.0	1	16.0	16	EI	33.00	0.5	3.5
7	Cables	lot	1	1000.00	eu	1.0	1	40.0	40	EI	33.00	1.3	2.3
8	Flow switch	ea	2	400.00	eu	0.8	2	4.0	8	EI	33.00	0.3	1.1
** Subtotal **						20.7			188			6.2	26.9
** WBS: 1.2.2.2.2.2.3	Fab/Buy Support Stand												
1	Slides mounting hardwre	ea	1	200.00	eu	0.2	1	8.0	8	MS	37.73	0.3	0.5
2	Support post & hardware	lot	1	3000.00	eu	3.0	1	8.0	8	MS	37.73	0.3	3.3
3	Misc hardwre & fixtures	lot	1	1000.00	eu	1.0	1	40.0	40	MS	37.73	1.5	2.5
** Subtotal **						4.2			56			2.1	6.3
** WBS: 1.2.2.2.2.2.4	Bellows												
1	Welded bellows assy	ea	2	4000.00	A91	8.0	0	0.0	0		0.00	0.0	8.0
2	Blank flanges,gaskets,etc	lot	2	300.00	cp	0.6	0	0.0	0		0.00	0.0	0.6
3	Inspect,clean,bake	lot	2	50.00	eu	0.1	2	2.0	4	MU	35.92	0.1	0.2
** Subtotal **						8.7			4			0.1	8.8
** WBS: 1.2.2.2.2.2.5	Assemble, Bakeout, Test (Assembly Shop)												
1	Assemble/test PBPM mech	ea	1	500.00	eu	0.5	2	20.0	40	MU	35.92	1.4	1.9
2	Assemble/test PBPM elec	ea	1	500.00	eu	0.5	1	40.0	40	EI	33.00	1.3	1.8
3	Bakeout/UHV pre-qualify	ea	1	500.00	eu	0.5	1	40.0	40	MU	35.92	1.4	1.9
4	Fiducialization		0	0.00		0.0	2	16.0	32	MU	35.92	1.1	1.1
5	Misc assy equip,jackets,	lot	1	1000.00	eu	1.0	1	20.0	20	MU	35.92	0.7	1.7
** Subtotal **						2.5			172			6.1	8.6
** WBS: 1.2.2.2.2.2.6	Installation												
1	LCW Hardware & connection	lot	1	300.00	eu	0.3	2	20.0	40	MU	35.92	1.4	1.7
2	Transport & on-site setup	lot	1	200.00	eu	0.2	2	8.0	16	MU	35.92	0.6	0.8
3	Vac assemble & leak check	lot	1	100.00	eu	0.1	2	16.0	32	MU	35.92	1.1	1.2
4	Installation alignment		0	0.00		0.0	2	16.0	32	MS	37.73	1.2	1.2
5	Mech install,test,debug	lot	1	100.00	eu	0.1	2	20.0	40	MU	35.92	1.4	1.5
6	ELec. installation	lot	1	100.00	eu	0.1	1	20.0	20	IEL	62.85	1.3	1.4
7	Final bake & UHV qualify		0	0.00		0.0	2	20.0	40	MU	35.92	1.4	1.4
** Subtotal **						0.8			220			8.5	9.3
** WBS: 1.2.2.2.2.3.1	Fab/Buy Mech Parts & Subassy's												
1	Machine absorber blades	ea	2	1000.00	A91	2.0	2	40.0	80	MS	37.73	3.0	5.0
2	Braze absorber blades	ea	2	100.00	eu	0.2	2	20.0	40	MS	37.73	1.5	1.7
3	Brazing tooling/fixtures	ea	1	200.00	eu	0.2	1	20.0	20	MS	37.73	0.8	1.0
4	Blade/pivot mounting	ea	2	500.00	A91	1.0	2	60.0	120	MS	37.73	4.5	5.5
5	Pneumatic actuator mechan	ea	2	500.00	eu	1.0	2	40.0	80	MS	37.73	3.0	4.0
6	Limit stops & switches	ea	2	100.00	eu	0.2	2	20.0	40	MS	37.73	1.5	1.7
7	Bellws/conflat ass'y/weld	ea	2	1000.00	A91	2.0	2	40.0	80	MS	37.73	3.0	5.0

Technical Components Cost Estimate

ITM NBR	ITM DESCRIPTION	UNIT MEAS	NBR UNITS	UNIT COST COST BASIS	TOTAL ISC K$	LBR UNTS	HRS/ UNIT	TOTAL HRS	CRAFT CODE	CRAFT RATE	TOTAL LABOR K$	ISC + LABOR K$
** Subtotal **					6.6			460			17.4	24.0
** WBS: 1.2.2.2.2.3.2	Fab/Buy Electrical and Controls											
1	ILC & SBX	ea	1	1500.00 eu	1.5	1	20.0	20	EI	33.00	0.7	2.2
2	Cables	lot	1	200.00 eu	0.2	1	8.0	8	EI	33.00	0.3	0.5
3	Flow switch & interlocks	ea	2	400.00 eu	0.8	2	4.0	8	EI	33.00	0.3	1.1
4	Position indicators	set	1	500.00 eu	0.5	1	8.0	8	EI	33.00	0.3	0.8
5	Air solenoids	ea	4	500.00 eu	2.0	4	8.0	32	EI	33.00	1.1	3.1
6	Air pressure interlocks	ea	1	500.00 eu	0.5	1	16.0	16	EI	33.00	0.5	1.0
** Subtotal **					5.5			92			3.0	8.5
** WBS: 1.2.2.2.2.3.3	Fab/Buy Vacuum Chamber & Supports											
1	Custom vacuum chamber	ea	1	8000.00 A91	8.0	1	40.0	40	MU	35.92	1.4	9.4
2	Misc flanges & UHV hardwr	lot	1	2500.00 eu	2.5	0	0.0	0		0.00	0.0	2.5
3	Mounting struts/hardware	ea	6	500.00 A91	3.0	6	8.0	48	MS	37.73	1.8	4.8
4	Support posts,frame,hrdwr	lot	1	1500.00 A91	1.5	1	40.0	40	MS	37.73	1.5	3.0
** Subtotal **					15.0			128			4.8	19.8
** WBS: 1.2.2.2.2.3.4	Vacuum Pumping, Gauges, Controllers, P.S.											
1	Ion pump, 400 l/s	ea	1	7527.00 A92	7.5	1	4.0	4	MU	35.92	0.1	7.7
2	Ion pump controller	ea	1	2180.00 A92	2.2	1	4.0	4	EI	33.00	0.1	2.3
3	Ion pump cable,bakeable	ea	1	250.00 A91	0.2	1	4.0	4	EI	33.00	0.1	0.4
4	IEEE-48 cable,3m cntrller	ea	1	421.00 A92	0.4	0	0.0	0		0.00	0.0	0.4
5	Roughing valve	ea	2	650.00 A91	1.3	0	0.0	0		0.00	0.0	1.3
6	Ion gauge & controls	ea	1	3500.00 A91	3.5	1	4.0	4	MU	35.92	0.1	3.6
7	Ion gauge cable, bakeable	ea	1	250.00 cp	0.2	1	4.0	4	EI	33.00	0.1	0.4
8	Junction box,IG cable	ea	1	200.00 eu	0.2	1	4.0	4	EI	33.00	0.1	0.3
9	Interlock cable	ea	1	100.00 eu	0.1	0	0.0	0		0.00	0.0	0.1
** Subtotal **					15.7			24			0.8	16.5
** WBS: 1.2.2.2.2.3.5	Assemble, Bakeout, Test											
1	Assemble & test	ea	1	500.00 eu	0.5	2	80.0	160	MU	35.92	5.7	6.2
2	Bakeout & UHV qualify	lot	1	500.00 eu	0.5	2	40.0	80	MS	37.73	3.0	3.5
3	Survey/calibration		0	0.00	0.0	2	16.0	32	MU	35.92	1.1	1.1
4	Misc tools,fixtures,cart,	lot	1	1000.00 eu	1.0	1	80.0	80	MU	35.92	2.9	3.9
** Subtotal **					2.0			352			12.8	14.8
** WBS: 1.2.2.2.2.3.6	Installation											
1	LCW hardware/connections	lot	1	300.00 eu	0.3	2	16.0	32	MU	35.92	1.1	1.4
2	Transport/on-site setup	lot	1	200.00 eu	0.2	2	16.0	32	MU	35.92	1.1	1.3
3	Vac assemble & leak check	lot	1	50.00 eu	0.1	2	16.0	32	MU	35.92	1.1	1.2
4	Installation alignment		0	0.00	0.0	2	16.0	32	MS	37.73	1.2	1.2
5	Pneumatic hardware/cnnctn	lot	1	300.00 eu	0.3	2	16.0	32	MU	35.92	1.1	1.4
6	Mech install/test/debug	lot	1	50.00 eu	0.1	2	16.0	32	MU	35.92	1.1	1.2
7	Elec installation		0	0.00	0.0	1	16.0	16	IEL	62.85	1.0	1.0
** Subtotal **					0.9			208			8.0	8.9
** WBS: 1.2.2.2.2.3.7	Titanium Sublimation Pump											
1	TSP pump spool piece	ea	1	2700.00 A91	2.7	0	0.0	0		0.00	0.0	2.7
2	TSP filaments & controllr	ea	1	3500.00 eu	3.5	1	8.0	8	EI	33.00	0.3	3.8
3	Flanges & UHV hardware	lot	1	500.00 eu	0.5	0	0.0	0		0.00	0.0	0.5
4	Misc (extrusions, etc.)	lot	1	1000.00 eu	1.0	1	20.0	20	MS	37.73	0.8	1.8
** Subtotal **					7.7			28			1.0	8.7
** WBS: 1.2.2.2.2.3.8	Isolation Valve											
1	Valve & controllr proc.	ea	1	18000.00 A91	18.0	0	0.0	0		0.00	0.0	18.0
2	Prelim assemble & test	lot	1	50.00 eu	0.1	1	8.0	8	MU	35.92	0.3	0.3
3	Inspection, cleaning, etc	lot	1	50.00 eu	0.1	1	4.0	4	MU	35.92	0.1	0.2
4	Cables & connectors	lot	1	200.00 eu	0.2	1	2.0	2	EI	33.00	0.1	0.3

Technical Components Cost Estimate

ITM NBR	ITM DESCRIPTION	UNIT MEAS	NBR UNITS	UNIT COST COST	BASIS	TOTAL ISC K$	LBR UNTS	HRS/ UNIT	TOTAL HRS	CRAFT CODE	CRAFT RATE	TOTAL LABOR K$	ISC LABOR K$
5	Blank flanges & hardware	lot	2	200.00	eu	0.4	0	0.0	0		0.00	0.0	0.4
** Subtotal **						18.7			14			0.5	19.2
** WBS: 1.2.2.2.2.4.1	Fast Valve												
1	Modified VAT fast shutter	ea	1	26000.00	A91	26.0	0	0.0	0		0.00	0.0	26.0
** Subtotal **						26.0			0			0.0	26.0
** WBS: 1.2.2.2.2.4.2	Fab/Buy Electrical and Controls												
1	Cables & connectors	lot	1	500.00	A91	0.5	1	8.0	8	EI	33.00	0.3	0.8
2	Air pressure interlocks	ea	1	500.00	eu	0.5	1	16.0	16	EI	33.00	0.5	1.0
3	Junction box,IG cable	ea	3	200.00	eu	0.6	0	0.0	0		0.00	0.0	0.6
4	Interlock cable	ea	1	500.00	eu	0.5	0	0.0	0		0.00	0.0	0.5
** Subtotal **						2.1			24			0.8	2.9
** WBS: 1.2.2.2.2.4.3	Bellows												
1	Welded bellows assy	ea	1	3000.00	A91	3.0	1	4.0	4	MS	37.73	0.2	3.2
2	Blank flanges,gaskets,etc	lot	1	300.00	cp	0.3	0	0.0	0		0.00	0.0	0.3
3	Inspect,clean,bake	lot	1	50.00	eu	0.1	1	4.0	4	MU	35.92	0.1	0.2
** Subtotal **						3.3			8			0.3	3.6
** WBS: 1.2.2.2.2.4.4	Aperture Plate												
1	Water-cooled absorber	ea	1	800.00	A91	0.8	1	40.0	40	MS	37.73	1.5	2.3
2	Brazing,fixtures,tooling	lot	1	200.00	eu	0.2	1	30.0	30	MU	35.92	1.1	1.3
3	Flange gaskets & hardware	lot	2	200.00	eu	0.4	1	10.0	10	MS	37.73	0.4	0.8
** Subtotal **						1.4			80			3.0	4.4
** WBS: 1.2.2.2.2.4.5	Assemble, Bakeout, Test												
1	Assemble & test	ea	1	500.00	eu	0.5	1	80.0	80	MU	35.92	2.9	3.4
2	Survey/calibration		0	0.00		0.0	1	16.0	16	MU	35.92	0.6	0.6
** Subtotal **						0.5			96			3.4	3.9
** WBS: 1.2.2.2.2.4.6	Installation												
1	Pneumatic hardwar/cnnctns	lot	1	300.00	eu	0.3	1	16.0	16	MU	35.92	0.6	0.9
2	Mech install/test/debug	lot	1	50.00	eu	0.1	1	16.0	16	MU	35.92	0.6	0.6
3	Elec installation		0	0.00		0.0	1	16.0	16	IEL	62.85	1.0	1.0
** Subtotal **						0.3			48			2.2	2.5
** WBS: 1.2.2.2.2.5.1	Fab/Buy Mech Parts & Subassy's												
1	Sintered tungsten shutter	ea	1	4000.00	eu	4.0	1	40.0	40	MS	37.73	1.5	5.5
2	Shutter flange-mounting	ea	1	500.00	eu	0.5	1	40.0	40	MS	37.73	1.5	2.0
3	In-vac position stops/mon	ea	1	1500.00	eu	1.5	1	80.0	80	MS	37.73	3.0	4.5
4	Bellows/cnflat ass'y/weld	ea	1	2000.00	eu	2.0	1	20.0	20	MS	37.73	0.8	2.8
5	Pneumatic actuatr/mountng	ea	1	2000.00	eu	2.0	1	120.0	120	MS	37.73	4.5	6.5
** Subtotal **						10.0			300			11.3	21.3
** WBS: 1.2.2.2.2.5.2	Fab/Buy Electrical and Controls												
1	ILC & SBX	ea	1	1500.00	eu	1.5	1	16.0	16	EI	33.00	0.5	2.0
2	Cables	lot	1	200.00	eu	0.2	1	16.0	16	EI	33.00	0.5	0.7
3	Position indicators	set	1	200.00	eu	0.2	1	16.0	16	EI	33.00	0.5	0.7
4	Air solenoids	ea	1	200.00	eu	0.2	1	8.0	8	EI	33.00	0.3	0.5
5	Air pressure interlocks	ea	1	200.00	eu	0.2	1	16.0	16	EI	33.00	0.5	0.7
** Subtotal **						2.3			72			2.4	4.7
** WBS: 1.2.2.2.2.5.3	Fab/Buy Vacuum Chamber & Supports												
1	Custom vacuum chamber	ea	1	5000.00	A91	5.0	1	20.0	20	MU	35.92	0.7	5.7
2	Misc flanges & UHV hardwr	lot	1	1000.00	eu	1.0	0	0.0	0		0.00	0.0	1.0
3	Roughing valve	ea	2	650.00	A91	1.3	0	0.0	0		0.00	0.0	1.3

Technical Components Cost Estimate

ITM NBR	ITM DESCRIPTION	UNIT MEAS	NBR UNITS	UNIT COST	COST BASIS	TOTAL ISC K$	LBR UNTS	HRS/ UNIT	TOTAL HRS	CRAFT CODE	CRAFT RATE	TOTAL LABOR K$	ISC + LABOR K$
4	Mounting struts/hardware	ea	6	500.00	A91	3.0	6	8.0	48	MS	37.73	1.8	4.8
5	Support posts	ea	2	1000.00	eu	2.0	2	20.0	40	MS	37.73	1.5	3.5
** Subtotal **						12.3			108			4.0	16.3
** WBS: 1.2.2.2.2.5.4	Vacuum Pumping, Gauges, Controllers, P.S.												
1	Ion pump, 220 l/s	ea	1	4865.00	A91	4.9	1	4.0	4	MU	35.92	0.1	5.0
2	Ion pump controller	ea	1	2500.00	A91	2.5	1	4.0	4	EI	33.00	0.1	2.6
3	Ion pump cable, bakeable	ea	1	250.00	A91	0.2	0	0.0	0		0.00	0.0	0.2
4	IEEE-488 cable,3m cntller	ea	1	150.00	cp	0.1	0	0.0	0		0.00	0.0	0.1
5	Ion gauge & controls	ea	1	3500.00	A91	3.5	1	4.0	4	MU	35.92	0.1	3.6
6	Ion gauge cable, bakeable	ea	1	250.00	cp	0.2	1	4.0	4	EI	33.00	0.1	0.4
7	Junction box, IG cable	ea	1	200.00	eu	0.2	0	0.0	0		0.00	0.0	0.2
8	Ion gauge controller	ea	1	3500.00	cp	3.5	0	0.0	0		0.00	0.0	3.5
9	Interlock cable	ea	1	100.00	eu	0.1	0	0.0	0		0.00	0.0	0.1
** Subtotal **						15.3			16			0.6	15.9
** WBS: 1.2.2.2.2.5.5	Assemble, Bakeout, Test												
1	Assemble & test	lot	1	500.00	eu	0.5	2	80.0	160	MU	35.92	5.7	6.2
2	Pre-bakeout tungstn block	ea	1	300.00	eu	0.3	1	20.0	20	MU	35.92	0.7	1.0
3	Survey/calibration		0	0.00		0.0	2	16.0	32	MU	35.92	1.1	1.1
3	Bakeout & UHV qualify	ea	1	500.00	eu	0.5	2	40.0	80	MU	35.92	2.9	3.4
4	Misc tools,fixtures,cart,	lot	1	1000.00	eu	1.0	1	40.0	40	MU	35.92	1.4	2.4
** Subtotal **						2.3			332			11.9	14.2
** WBS: 1.2.2.2.2.5.6	Installation												
1	Transport & on-site setup	lot	1	200.00	eu	0.2	2	16.0	32	MU	35.92	1.1	1.3
2	Vac assemble & leak check	lot	1	50.00	eu	0.1	2	16.0	32	MU	35.92	1.1	1.2
3	Instlltn algnmnt (stnd)		0	0.00		0.0	2	16.0	32	MS	37.73	1.2	1.2
4	Pneumatic hardwar/cnnctns	lot	1	300.00	eu	0.3	1	16.0	16	MU	35.92	0.6	0.9
5	Mech install,test,debug	lot	1	50.00	eu	0.1	2	16.0	32	MU	35.92	1.1	1.2
6	Elec installation		0	0.00		0.0	1	16.0	16	EI	33.00	0.5	0.5
** Subtotal **						0.6			160			5.8	6.4
** WBS: 1.2.2.2.2.5.7	Shield Wall Transition Spool												
1	SWT spool piece	ea	1	2500.00	A91	2.5	1	4.0	4	MS	37.73	0.2	2.7
2	Misc. flanges & UHV hrdwr	lot	1	500.00	eu	0.5	1	4.0	4	MS	37.73	0.2	0.7
3	Lead shielding & supports	lot	1	500.00	eu	0.5	1	40.0	40	MS	37.73	1.5	2.0
4	Struts and hardware	lot	2	500.00	A91	1.0	2	8.0	16	MS	37.73	0.6	1.6
5	Misc extrusions, etc.	lot	1	1000.00	eu	1.0	1	40.0	40	MS	37.73	1.5	2.5
** Subtotal **						5.5			104			3.9	9.4
** WBS: 1.2.2.2.2.5.8	Isolation Valve												
1	Valve & controller proc	ea	1	15000.00	vq	15.0	0	0.0	0		0.00	0.0	15.0
2	Prelim assy & test	lot	1	50.00	eu	0.1	1	8.0	8	MU	35.92	0.3	0.3
3	Inspection,cleaning,etc.	lot	1	50.00	eu	0.1	1	4.0	4	MU	35.92	0.1	0.2
4	Cables & connectors	ea	1	200.00	eu	0.2	1	2.0	2	EI	33.00	0.1	0.3
5	Blank flanges & hardware	lot	2	200.00	eu	0.4	0	0.0	0		0.00	0.0	0.4
** Subtotal **						15.7			14			0.5	16.2
** WBS: 1.2.2.2.2.6.1	Fab/Buy Mech Parts & Subassy's												
1	Flange & mntng plate fab	ea	1	600.00	eu	0.6	1	40.0	40	MS	37.73	1.5	2.1
2	Cf feedthru for electrncs	ea	8	200.00	eu	1.6	0	0.0	0		0.00	0.0	1.6
3	Brazing & fixtures	ea	1	100.00	eu	0.1	1	20.0	20	MU	35.92	0.7	0.8
4	Feedthrus - welding	ea	1	50.00	eu	0.1	1	20.0	20	MS	37.73	0.8	0.8
5	Blades fab	ea	4	100.00	eu	0.4	4	20.0	80	MS	37.73	3.0	3.4
6	In-vac parts & elec fab	lot	1	200.00	eu	0.2	1	40.0	40	MS	37.73	1.5	1.7
7	LCW Hardware	lot	1	100.00	eu	0.1	1	8.0	8	MU	35.92	0.3	0.4
8	2-axis transltn mechanism	ea	1	3000.00	eu	3.0	0	0.0	0		0.00	0.0	3.0
9	Outside-vac mntng hardwre	lot	1	500.00	eu	0.5	1	20.0	20	MS	37.73	0.8	1.3
10	Blade alignment fixtures	ea	1	200.00	eu	0.2	1	20.0	20	MS	37.73	0.8	1.0

Technical Components Cost Estimate

ITM NBR	ITM DESCRIPTION	UNIT MEAS	NBR UNITS	UNIT COST	COST BASIS	TOTAL ISC K$	LBR UNTS	HRS/ UNIT	TOTAL HRS	CRAFT CODE	CRAFT RATE	TOTAL LABOR K$	ISC LABOR K$
** Subtotal **						6.8			248			9.3	16.1
** WBS: 1.2.2.2.2.6.2	Fab/Buy Electrical and Controls												
1	Bias power supply	ea	2	3000.00	eu	6.0	2	8.0	16	EI	33.00	0.5	6.5
2	ILC & SBX	ea	3	1500.00	eu	4.5	3	20.0	60	EI	33.00	2.0	6.5
3	Electrometer	ea	4	1695.00	cp	6.8	4	8.0	32	EI	33.00	1.1	7.8
4	Eurocard crate	ea	1	1000.00	eu	1.0	1	16.0	16	EI	33.00	0.5	1.5
5	Thermocouples & controls	ea	2	500.00	eu	1.0	2	8.0	16	EI	33.00	0.5	1.5
6	Stepper motor controller	ea	1	3000.00	eu	3.0	1	16.0	16	EI	33.00	0.5	3.5
7	Cables	lot	1	1000.00	eu	1.0	1	32.0	32	EI	33.00	1.1	2.1
8	Flow switch	ea	2	400.00	eu	0.8	2	4.0	8	EI	33.00	0.3	1.1
** Subtotal **						24.1			196			6.5	30.5
** WBS: 1.2.2.2.2.6.3	Fab/Buy Support Stand												
1	Slides mounting hardwr	ea	1	200.00	EU	0.2	1	8.0	8	MS	37.73	0.3	0.5
2	Support post & hardware	ea	1	3000.00	eu	3.0	1	8.0	8	MS	37.73	0.3	3.3
3	Misc hardware & fixtures	ea	1	1000.00	eu	1.0	1	40.0	40	MS	37.73	1.5	2.5
** Subtotal **						4.2			56			2.1	6.3
** WBS: 1.2.2.2.2.6.4	Bellows												
1	Welded bellows assy	ea	2	4000.00	A91	8.0	0	0.0	0		0.00	0.0	8.0
2	Blank flanges, gaskets,	lot	2	300.00	cp	0.6	0	0.0	0		0.00	0.0	0.6
3	Inspection,cleaning,bake	lot	2	50.00	eu	0.1	2	2.0	4	MU	35.92	0.1	0.2
** Subtotal **						8.7			4			0.1	8.8
** WBS: 1.2.2.2.2.6.5	Assemble, Bakeout, Test												
1	Assemble/test PBPM mech	ea	1	500.00	eu	0.5	2	20.0	40	MU	35.92	1.4	1.9
2	Assemble/test PBPM elec	ea	1	500.00	eu	0.5	1	40.0	40	EI	33.00	1.3	1.8
3	Bakeout/UHV pre-qualify	ea	1	500.00	eu	0.5	1	40.0	40	MU	35.92	1.4	1.9
4	Fiducialization		0	0.00		0.0	2	16.0	32	MU	35.92	1.1	1.1
5	Misc assy equip,jackets,	lot	1	1000.00	eu	1.0	1	20.0	20	MU	35.92	0.7	1.7
** Subtotal **						2.5			172			6.1	8.6
** WBS: 1.2.2.2.2.6.6	Installation												
1	LCW Hardware & connection	lot	1	300.00	eu	0.3	2	20.0	40	MU	35.92	1.4	1.7
2	Transport & on-site setup	lot	1	200.00	eu	0.2	2	8.0	16	MU	35.92	0.6	0.8
3	Vac assemble & leak check	lot	1	100.00	eu	0.1	2	16.0	32	MU	35.92	1.1	1.2
4	Installation alignment		0	0.00		0.0	2	16.0	32	MU	35.92	1.1	1.1
5	Mech install,test,debug	lot	1	100.00	eu	0.1	2	20.0	40	MU	35.92	1.4	1.5
6	ELec. installation	lot	1	100.00	eu	0.1	1	20.0	20	IEL	62.85	1.3	1.4
7	Final bake & UHV qualify		0	0.00		0.0	2	20.0	40	MU	35.92	1.4	1.4
** Subtotal **						0.8			220			8.4	9.2
** WBS: 1.2.2.2.2.7.1	Fab/Buy Mech Parts & Subassy's												
1	Misc machine shop effort	lot	1	1000.00	eu	1.0	1	80.0	80	MS	37.73	3.0	4.0
2	Misc mech tech & tools	lot	1	1000.00	eu	1.0	1	80.0	80	MU	35.92	2.9	3.9
** Subtotal **						2.0			160			5.9	7.9
** WBS: 1.2.2.2.2.7.2	Fab/Buy Electical and Controls												
1	Cables,valve actuation &	lot	3	100.00	eu	0.3	3	8.0	24	EI	33.00	0.8	1.1
2	X-connect blocks & frame	ea	1	500.00	eu	0.5	1	40.0	40	EI	33.00	1.3	1.8
3	Relays blocks & frame	ea	1	580.00	cp	0.6	1	40.0	40	EI	33.00	1.3	1.9
4	48 Ch. opto-isolator	ea	1	700.00	cp	0.7	1	40.0	40	EI	33.00	1.3	2.0
5	Cable trays, conduit, etc	lot	1	2000.00	eu	2.0	1	80.0	80	IEL	62.85	5.0	7.0
6	Double elec. rack	ea	1	1300.00	eu	1.3	1	40.0	40	EI	33.00	1.3	2.6
7	BA panel 3 ph 30A	ea	1	50.00	cp	0.1	1	1.0	1	EI	33.00	0.0	0.1
8	Breaker panel	ea	2	200.00	cp	0.4	2	4.0	8	EI	33.00	0.3	0.7
9	Plug strip	ea	2	20.00	eu	0.0	2	4.0	8	EI	33.00	0.3	0.3
10	Rack fans	ea	2	50.00	eu	0.1	2	2.0	4	EI	33.00	0.1	0.2

Technical Components Cost Estimate

ITM NBR	ITM DESCRIPTION	UNIT MEAS	NBR UNITS	UNIT COST COST	BASIS	TOTAL ISC K$	LBR UNTS	HRS/ UNIT	TOTAL HRS	CRAFT CODE	CRAFT RATE	TOTAL LABOR K$	ISC + LABOR K$
11	Flow switches/interlocks	ea	2	400.00	eu	0.8	2	8.0	16	EI	33.00	0.5	1.3
** Subtotal **						6.8			301			12.3	19.1
** WBS: 1.2.2.2.2.7.3	Fab/Buy Vacuum Chamber & Supports												
1	Misc flanges,viewprts,etc	lot	1	3000.00	eu	3.0	0	0.0	0		0.00	0.0	3.0
2	Roughing valves	ea	4	650.00	cp	2.6	0	0.0	0		0.00	0.0	2.6
3	Misc. unistrut/hardware	lot	1	500.00	eu	0.5	1	20.0	20	MU	35.92	0.7	1.2
** Subtotal **						6.1			20			0.7	6.8
** WBS: 1.2.2.2.2.7.4	Vacuum Pumping, Gauges, Controllers, P.S.												
1	RGA system	ea	1	12000.00	cp	12.0	1	40.0	40	MU	35.92	1.4	13.4
2	RGA cable, bakeable	ea	1	250.00	cp	0.2	1	8.0	8	EI	33.00	0.3	0.5
3	Junction box, RGA cable	ea	1	200.00	eu	0.2	0	0.0	0		0.00	0.0	0.2
4	Interlock cable	ea	1	100.00	eu	0.1	0	0.0	0		0.00	0.0	0.1
** Subtotal **						12.5			48			1.7	14.3
** WBS: 1.2.2.2.2.7.5	Assemble, Bakeout, Test												
1	Misc assemble & test	ea	1	1000.00	eu	1.0	2	40.0	80	MU	35.92	2.9	3.9
2	Misc bakeout/UHV qualify	lot	1	1000.00	eu	1.0	2	40.0	80	MU	35.92	2.9	3.9
3	Survey/calibration		0	0.00		0.0	3	32.0	96	MU	35.92	3.4	3.4
** Subtotal **						2.0			256			9.2	11.2
** WBS: 1.2.2.2.2.7.6	Installation												
1	Shielding wall modify	lot	1	500.00	eu	0.5	2	40.0	80	MU	35.92	2.9	3.4
2	Lead shielding installatn	lot	1	500.00	eu	0.5	1	40.0	40	MU	35.92	1.4	1.9
3	Installatn final alignment		0	0.00		0.0	2	40.0	80	MU	35.92	2.9	2.9
4	F.E. pneumatic service	ea	1	1000.00	eu	1.0	1	40.0	40	MU	35.92	1.4	2.4
5	F.E. LCW service	lot	1	1000.00	eu	1.0	1	40.0	40	MU	35.92	1.4	2.4
6	Mech install/test/debug	lot	1	50.00	eu	0.1	1	40.0	40	MU	35.92	1.4	1.5
7	Elec installation		0	0.00		0.0	1	80.0	80	IEL	62.85	5.0	5.0
8	LCW temp control system	ea	1	5000.00	A90	5.0	1	40.0	40	EI	33.00	1.3	6.3
** Subtotal **						8.1			440			17.8	25.9
** WBS: 1.2.2.2.2.8	Safety Systems												
1	ILC & SBX	ea	2	1500.00	eu	3.0	2	20.0	40	EI	33.00	1.3	4.3
2	Eurocard crate	ea	2	800.00	eu	1.6	0	0.0	0		0.00	0.0	1.6
3	Key panel	ea	1	400.00	cp	0.4	0	0.0	0		0.00	0.0	0.4
4	Monitor lights panel	ea	6	500.00	cp	3.0	0	0.0	0		0.00	0.0	3.0
5	Push button panel	ea	1	500.00	cp	0.5	0	0.0	0		0.00	0.0	0.5
6	Breaker panel	ea	1	500.00	cp	0.5	0	0.0	0		0.00	0.0	0.5
7	Cables	lot	1	500.00	eu	0.5	0	0.0	0		0.00	0.0	0.5
8	Wiring assembly		0	0.00		0.0	1	120.0	120	EI	33.00	4.0	4.0
9	Video camera & lens	ea	1	800.00	cp	0.8	0	0.0	0		0.00	0.0	0.8
10	Video monitor	ea	1	300.00	cp	0.3	0	0.0	0		0.00	0.0	0.3
11	RG59 coax,camera/monitor	ea	1	50.00	eu	0.1	1	2.0	2	EI	33.00	0.1	0.1
12	Video connectors	ea	2	5.00	eu	0.0	2	0.5	1	EI	33.00	0.0	0.0
13	Misc hardware	lot	1	1000.00	eu	1.0	1	80.0	80	MS	37.73	3.0	4.0
14	Elec. installation		0	0.00		0.0	1	40.0	40	IEL	62.85	2.5	2.5
** Subtotal **						11.7			283			10.9	22.6
** WBS: 1.2.2.2.3.1	Horiz. & Vert. Beam Defining Apertures												
1	Fab/procure mech parts	lot	1	30000.00	eu	30.0	1	460.0	460	MS	37.73	17.4	47.4
2	Fab/procure elec & cntrls	lot	1	12300.00	eu	12.3	1	40.0	40	MS	37.73	1.5	13.8
3			0	0.00		0.0	1	72.0	72	EI	33.00	2.4	2.4
4	Fab/procure vac chamber	lot	1	15000.00	eu	15.0	1	128.0	128	MS	37.73	4.8	19.8
5	Vac pumpng,gages,ps,etc.	lot	1	15800.00	eu	15.8	1	16.0	16	MU	35.92	0.6	16.4
6			0	0.00		0.0	1	16.0	16	EI	33.00	0.5	0.5
7	Assemble,bakeout,test	lot	1	2000.00	eu	2.0	1	352.0	352	MU	35.92	12.6	14.6
8	Installation	lot	1	600.00	eu	0.6	1	130.0	130	MU	35.92	4.7	5.3
9			0	0.00		0.0	1	32.0	32	MS	37.73	1.2	1.2

Technical Components Cost Estimate

ITM NBR	ITM DESCRIPTION	UNIT MEAS	NBR UNITS	UNIT COST	COST BASIS	TOTAL ISC K$	LBR UNTS	HRS/ UNIT	TOTAL HRS	CRAFT CODE	CRAFT RATE	TOTAL LABOR K$	ISC LABOR K$
10			0	0.00		0.0	1	16.0	16	IEL	62.85	1.0	1.0
** Subtotal **						75.7			1262			46.7	122.4
** WBS: 1.2.2.2.3.2		M1 Mirror											
1	Fab/procure	lot	1	32200.00	eu	32.2	1	1116.0	1116	MS	37.73	42.1	74.3
2	Fab/procure	lot	1	16700.00	eu	16.7	1	40.0	40	MS	37.73	1.5	18.2
3			0	0.00		0.0	1	16.0	16	EI	33.00	0.5	0.5
4	Fab/procure vac chamber	lot	1	15150.00	eu	15.2	1	100.0	100	MS	37.73	3.8	18.9
5	Vac pumpng,gages,ps,etc.	lot	1	16850.00	eu	16.9	1	16.0	16	MS	37.73	0.6	17.5
6			0	0.00		0.0	1	16.0	16	EI	33.00	0.5	0.5
7	Assemble,bakeout,test	lot	1	500.00	eu	0.5	1	230.0	230	MS	37.73	8.7	9.2
8	Installation	lot	1	600.00	eu	0.6	1	100.0	100	MU	35.92	3.6	4.2
9			0	0.00		0.0	1	20.0	20	MS	37.73	0.8	0.8
10			0	0.00		0.0	1	40.0	40	ES	33.00	1.3	1.3
** Subtotal **						82.0			1694			63.4	145.4
** WBS: 1.2.2.2.3.3		M2 Mirror											
1	Fab/procure mech parts	lot	1	31200.00	eu	31.2	1	816.0	816	MS	37.73	30.8	62.0
2	Fab/procure elec & cntrls	lot	1	7700.00	eu	7.7	1	40.0	40	MS	37.73	1.5	9.2
3			0	0.00		0.0	1	52.0	52	ES	33.00	1.7	1.7
4	Fab/procure vac chamber	lot	1	15350.00	eu	15.3	1	100.0	100	MS	37.73	3.8	19.1
5	Vac pumpng,gages,ps,etc.	lot	1	12750.00	eu	12.8	1	16.0	16	MS	37.73	0.6	13.4
6			0	0.00		0.0	1	16.0	16	EI	33.00	0.5	0.5
7	Assemble,bakeout,test	lot	1	500.00	eu	0.5	1	232.0	232	MS	37.73	8.8	9.3
8	Installation	lot	1	600.00	eu	0.6	1	100.0	100	MU	35.92	3.6	4.2
9			0	0.00		0.0	1	20.0	20	MS	37.73	0.8	0.8
10			0	0.00		0.0	1	40.0	40	ES	33.00	1.3	1.3
** Subtotal **						68.1			1432			53.3	121.4
** WBS: 1.2.2.2.3.4		M3 Mirror											
1	Fab/procure mech parts	lot	1	15900.00	eu	15.9	1	536.0	536	MS	37.73	20.2	36.1
2	Fab/procure elect & cntrl	lot	1	4950.00	eu	5.0	1	20.0	20	MS	37.73	0.8	5.7
3			0	0.00		0.0	1	36.0	36	ES	33.00	1.2	1.2
4	Fab/procure vac chamber	lot	1	9350.00	eu	9.3	1	100.0	100	MS	37.73	3.8	13.1
5	Vac pumpng,gages,ps,etc.	lot	1	12750.00	eu	12.8	1	16.0	16	MS	37.73	0.6	13.4
6			0	0.00		0.0	1	16.0	16	EI	33.00	0.5	0.5
7	Assemble,bakeout,test	lot	1	500.00	eu	0.5	1	192.0	192	MS	37.73	7.2	7.7
8	Installation	lot	1	600.00	eu	0.6	1	100.0	100	MU	35.92	3.6	4.2
9			0	0.00		0.0	1	20.0	20	MS	37.73	0.8	0.8
10			0	0.00		0.0	1	40.0	40	ES	33.00	1.3	1.3
** Subtotal **						44.1			1076			40.0	84.0
** WBS: 1.2.2.2.3.5		Monochromator (NIM)											
1	Fab/procure mech parts	lot	1	323600.00	eu	323.6	1	932.0	932	MS	37.73	35.2	358.8
2	Fab/procure elec & cntrls	lot	1	1000.00	eu	1.0	0	0.0	0		0.00	0.0	1.0
3	Fab/procure vac chamber	lot	1	12800.00	eu	12.8	1	480.0	480	MS	37.73	18.1	30.9
4	Vac pumpng,gages,ps,etc.	lot	1	34200.00	eu	34.2	1	32.0	32	MS	37.73	1.2	35.4
5			0	0.00		0.0	1	16.0	16	EI	33.00	0.5	0.5
6	Assemble,bakeout,test	lot	1	400.00	eu	0.4	1	616.0	616	MS	37.73	23.2	23.6
7	Installation	lot	1	600.00	eu	0.6	1	240.0	240	MS	37.73	9.1	9.7
8			0	0.00		0.0	1	40.0	40	ES	33.00	1.3	1.3
9			0	0.00		0.0	1	80.0	80	MS	37.73	3.0	3.0
** Subtotal **						372.6			2436			91.6	464.2
** WBS: 1.2.2.2.3.6		M4 Mirror											
1	Fab/procure mech parts	lot	1	30000.00	eu	30.0	1	256.0	256	MS	37.73	9.7	39.7
2	Fab/procure	lot	1	1000.00	eu	1.0	0	0.0	0		0.00	0.0	1.0
3	Fab/procure vac chamber	lot	1	11350.00	eu	11.3	1	100.0	100	MS	37.73	3.8	15.1
4	Vac pumpng,gages,ps,etc.	lot	1	11600.00	eu	11.6	1	16.0	16	MS	37.73	0.6	12.2
5			0	0.00		0.0	1	16.0	16	EI	33.00	0.5	0.5
6	Assemble,bakeout,test	lot	1	200.00	eu	0.2	1	152.0	152	MS	37.73	5.7	5.9

Technical Components Cost Estimate

ITM NBR	ITM DESCRIPTION	UNIT MEAS	NBR UNITS	UNIT COST	COST BASIS	TOTAL ISC K$	LBR UNTS	HRS/ UNIT	TOTAL HRS	CRAFT CODE	CRAFT RATE	TOTAL LABOR K$	ISC + LABOR K$
7	Installation	lot	1	300.00	eu	0.3	1	60.0	60	MU	35.92	2.2	2.5
8			0	0.00		0.0	1	16.0	16	MS	37.73	0.6	0.6
** Subtotal **						54.5			616			23.1	77.5
** WBS: 1.2.2.2.3.7	M5 Mirror												
1	Fab/procure	lot	1	30000.00	eu	30.0	1	256.0	256	MS	37.73	9.7	39.7
2	Fab/procure	lot	1	1000.00	eu	1.0	0	0.0	0		0.00	0.0	1.0
3	Fab/procure vac chamber	lot	1	11350.00	eu	11.3	1	100.0	100	MS	37.73	3.8	15.1
4	Vac pumpng,gages,ps,etc.	lot	1	11600.00	eu	11.6	1	16.0	16	MS	37.73	0.6	12.2
5			0	0.00		0.0	1	16.0	16	EI	33.00	0.5	0.5
6	Assemble,bakeout,test	lot	1	100.00	eu	0.1	1	72.0	72	MS	37.73	2.7	2.8
7	Installation	lot	1	50.00	eu	0.1	1	16.0	16	MS	37.73	0.6	0.7
8			0	0.00		0.0	1	20.0	20	MU	35.92	0.7	0.7
** Subtotal **						54.1			496			18.6	72.7
** WBS: 1.2.2.2.3.8	Branch Line Diagnostics												
1	Fab/procure mech parts	lot	1	18000.00	eu	18.0	1	480.0	480	MS	37.73	18.1	36.1
2	Fab/procure vac chamber	lot	1	13200.00	eu	13.2	1	84.0	84	MS	37.73	3.2	16.4
3	Assemble,bakeout,test	lot	1	600.00	eu	0.6	1	228.0	228	MS	37.73	8.6	9.2
4	Installation	lot	1	100.00	eu	0.1	1	84.0	84	MU	35.92	3.0	3.1
** Subtotal **						31.9			876			32.9	64.8
** WBS: 1.2.2.2.3.9	Vacuum System: Controls & Installation												
1	Fab/procure mech parts	lot	1	17500.00	eu	17.5	1	100.0	100	MU	35.92	3.6	21.1
2			0	0.00		0.0	1	52.0	52	MS	37.73	2.0	2.0
3	Fab/procure elec & cntrls	lot	1	48790.00	eu	48.8	1	120.0	120	EM	33.00	4.0	52.8
4			0	0.00		0.0	1	162.0	162	ES	33.00	5.3	5.3
5			0	0.00		0.0	1	120.0	120	CP	59.40	7.1	7.1
6			0	0.00		0.0	1	60.0	60	EI	33.00	2.0	2.0
7	Fab/procure vac chamber	lot	1	45150.00	eu	45.1	1	288.0	288	MS	37.73	10.9	56.0
8	Vac pumpng,gages,ps,etc.	lot	1	11850.00	eu	11.8	1	16.0	16	MS	37.73	0.6	12.5
9			0	0.00		0.0	1	16.0	16	EI	33.00	0.5	0.5
10	Assemble,bakeout,test	lot	1	300.00	eu	0.3	1	168.0	168	MS	37.73	6.3	6.6
11	Installation	lot	1	4200.00	eu	4.2	1	340.0	340	MU	35.92	12.2	16.4
12			0	0.00		0.0	1	48.0	48	MS	37.73	1.8	1.8
13			0	0.00		0.0	1	40.0	40	CP	59.40	2.4	2.4
14			0	0.00		0.0	1	120.0	120	ES	33.00	4.0	4.0
** Subtotal **						127.8			1650			62.7	190.5
** WBS: 1.2.2.2.3.10	Branch Line Safety Systems												
1	Branch Line Safety System	lot	1	6900.00	eu	6.9	1	80.0	80	ES	33.00	2.6	9.5
2			0	0.00		0.0	1	80.0	80	EM	33.00	2.6	2.6
** Subtotal **						6.9			160			5.3	12.2
** WBS: 1.2.2.2.3.11	Harmonic Suppression & Optical Filters												
1	Fab/procure mech parts	lot	1	23000.00	eu	23.0	1	160.0	160	MS	37.73	6.0	29.0
2	Fab/procure vac chamber	lot	1	26850.00	lot	26.9	1	100.0	100	MS	37.73	3.8	30.6
3	Vac pumpng,gages,ps,etc.	lot	1	63700.00	eu	63.7	1	56.0	56	MS	37.73	2.1	65.8
4			0	0.00		0.0	1	16.0	16	EI	33.00	0.5	0.5
5	Assemble,bakeout,test	lot	1	400.00	eu	0.4	1	288.0	288	MS	37.73	10.9	11.3
6	Installation	lot	1	300.00	eu	0.3	1	120.0	120	MU	35.92	4.3	4.6
7			0	0.00		0.0	1	40.0	40	MS	37.73	1.5	1.5
8			0	0.00		0.0	1	60.0	60	ES	33.00	2.0	2.0
** Subtotal **						114.3			840			31.1	145.4
** WBS: 1.2.2.2.3.12	Secondary Branchline												
1	Sec. Branchline Allowance	lot	1	250000.00		250.0	0	0.0	0		0.00	0.0	250.0
** Subtotal **						250.0			0			0.0	250.0

Technical Components Cost Estimate

ITM NBR	ITM DESCRIPTION	UNIT MEAS	NBR UNITS	UNIT COST	COST BASIS	TOTAL ISC K$	LBR UNTS	HRS/ UNIT	TOTAL HRS	CRAFT CODE	CRAFT RATE	TOTAL LABOR K$	ISC LABOR K$
** WBS: 1.2.3.1.1		UX Undulator EDI											
1	Engineering		0	0.00		0.0	1	4500.0	4500	ME	59.40	267.3	267.3
2	Design		0	0.00		0.0	1	4600.0	4600	MD	42.25	194.3	194.3
3	S&E	lot	1	29130.00	eu	29.1	0	0.0	0		0.00	0.0	29.1
** Subtotal **						29.1			9100			461.6	490.8
** WBS: 1.2.3.1.2		UX Front End EDI											
1	Design		0	0.00		0.0	1	2000.0	2000	MD	42.25	84.5	84.5
2	S&E	lot	1	3600.00	eu	3.6	0	0.0	0		0.00	0.0	3.6
** Subtotal **						3.6			2000			84.5	88.1
** WBS: 1.2.3.1.3		UX Branchline EDI											
1	Engineering		0	0.00		0.0	1	2400.0	2400	ME	59.40	142.6	142.6
2	Design		0	0.00		0.0	1	7200.0	7200	MD	42.25	304.2	304.2
3	S&E	lot	1	31900.00	eu	31.9	0	0.0	0		0.00	0.0	31.9
** Subtotal **						31.9			9600			446.8	478.7
** WBS: 1.2.3.2.1		UX Undulator											
1	Undulators (BLX)	ea	2	721200.00	A87	1442.4	0	0.0	0		0.00	0.0	1442.4
2	Controls	lot	1	40000.00	eu	40.0	1	320.0	320	EE	59.40	19.0	59.0
3	" "		0	0.00		0.0	1	240.0	240	EI	33.00	7.9	7.9
4	" "		0	0.00		0.0	1	120.0	120	EM	33.00	4.0	4.0
5	" "		0	0.00		0.0	1	40.0	40	IEL	62.85	2.5	2.5
6	Installation		0	0.00		0.0	1	240.0	240	MU	35.92	8.6	8.6
7	" "		0	0.00		0.0	1	160.0	160	EI	33.00	5.3	5.3
8	" "		0	0.00		0.0	1	80.0	80	EM	33.00	2.6	2.6
9	" "		0	0.00		0.0	1	160.0	160	IEL	62.85	10.1	10.1
10	" "		0	0.00		0.0	1	64.0	64	RG	37.65	2.4	2.4
11	Magnetic Modulator System	lot	1	20000.00	eu	20.0	1	400.0	400	MS	37.73	15.1	35.1
12	" "		0	0.00		0.0	1	400.0	400	MA	38.60	15.4	15.4
13	" "		0	0.00		0.0	1	240.0	240	MU	35.92	8.6	8.6
14	" "	lot	1	10000.00	eu	10.0	1	320.0	320	EI	33.00	10.6	20.6
14	" "		0	0.00		0.0	1	120.0	120	IEL	62.85	7.5	7.5
15	" "		0	0.00		0.0	1	120.0	120	EM	33.00	4.0	4.0
** Subtotal **						1512.4			3024			123.6	1636.0
** WBS: 1.2.3.2.2.1.1		Aperture Plate											
1	Water Cooled Absorber	ea	1	800.00	A91	0.8	1	40.0	40	MS	37.73	1.5	2.3
2	Brazing Fixtures/Tooling	LOT	1	200.00	EU	0.2	1	30.0	30	MU	35.92	1.1	1.3
3	Flange Gaskets & Hardware	lot	2	200.00	eu	0.4	1	10.0	10	MS	37.73	0.4	0.8
** Subtotal **						1.4			80			3.0	4.4
** WBS: 1.2.3.2.2.1.2		Bellows											
1	Welded Bellows Assy	ea	1	3000.00	A91	3.0	1	1.0	1	MS	37.73	0.0	3.0
2	Inspect,Clean,Bake	ea	1	50.00	eu	0.1	1	2.0	2	MU	35.92	0.1	0.1
** Subtotal **						3.0			3			0.1	3.2
** WBS: 1.2.3.2.2.1.3		Collimating Spool											
1	Spool Piece	ea	1	1250.00	A91	1.2	1	8.0	8	MU	35.92	0.3	1.5
2	Misc. Flanges/UHV Hardwre	lot	1	500.00	eu	0.5	1	8.0	8	MS	37.73	0.3	0.8
3	Lead Shielding & Mounting	lot	1	500.00	eu	0.5	1	40.0	40	MS	37.73	1.5	2.0
** Subtotal **						2.2			56			2.1	4.3
** WBS: 1.2.3.2.2.1.4		Isolation Valve											
1	Valve & Controller Proc.	ea	1	22140.00	A91	22.1	0	0.0	0		0.00	0.0	22.1
2	Prelim Assemble & Test	lot	1	50.00	ea	0.1	1	8.0	8	MU	35.92	0.3	0.3
3	Inspect/Clean/Etc.	lot	1	50.00	eu	0.1	1	4.0	4	MU	35.92	0.1	0.2
4	Cables & connectors	lot	1	200.00	eu	0.2	1	4.0	4	EI	33.00	0.1	0.3
5	Blank flngs & mntng hrdwr	lot	2	200.00	eu	0.4	1	20.0	20	MS	37.73	0.8	1.2

Technical Components Cost Estimate

ITM NBR	ITM DESCRIPTION	UNIT MEAS	NBR UNITS	UNIT COST	COST BASIS	TOTAL ISC K$	LBR UNTS	HRS/ UNIT	TOTAL HRS	CRAFT CODE	CRAFT RATE	TOTAL LABOR K$	ISC + LABOR K$
** Subtotal **						22.8			36			1.3	24.2
** WBS: 1.2.3.2.2.1.5	Support Stand												
1	Support stand, misc. hrdw	ea	1	1500.00	eu	1.5	1	40.0	40	MS	37.73	1.5	3.0
2	Struts & hardware	ea	6	500.00	A91	3.0	6	8.0	48	MU	35.92	1.7	4.7
3	Misc.	lot	1	1000.00	eu	1.0	1	40.0	40	MS	37.73	1.5	2.5
** Subtotal **						5.5			128			4.7	10.2
** WBS: 1.2.3.2.2.1.6	Assemble, Bakeout, Test												
1	Clean parts	lot	1	100.00	eu	0.1	1	16.0	16	MU	35.92	0.6	0.7
2	Final vac assy,leak check	lot	1	100.00	eu	0.1	1	16.0	16	MU	35.92	0.6	0.7
3	Bakeout jackets	ea	1	1500.00	A91	1.5	1	8.0	8	MU	35.92	0.3	1.8
3	Fiducialize		0	0.00		0.0	2	8.0	16	MS	37.73	0.6	0.6
4	RGA scans, UHV pre-qualfy		0	0.00		0.0	1	16.0	16	MS	37.73	0.6	0.6
** Subtotal **						1.7			72			2.6	4.3
** WBS: 1.2.3.2.2.1.7	Installation												
1	Install/check valvs/cntrl	lot	1	200.00	eu	0.2	1	16.0	16	EI	33.00	0.5	0.7
2	Install utilities	lot	1	500.00	eu	0.5	1	16.0	16	MU	35.92	0.6	1.1
3	Install/align supprt stnd	lot	1	200.00	eu	0.2	2	16.0	32	MU	35.92	1.1	1.3
4	Instll/align vac hardware		0	0.00		0.0	2	16.0	32	MU	35.92	1.1	1.1
5	Vac cnnctns, leak check		0	0.00		0.0	2	16.0	32	MU	35.92	1.1	1.1
6	Bakeout		0	0.00		0.0	2	16.0	32	MU	35.92	1.1	1.1
7	Elec. installation		0	0.00		0.0	1	8.0	8	IEL	62.85	0.5	0.5
** Subtotal **						0.9			168			6.2	7.1
* WBS: 1.2.3.2.2.2.1	Fab/Buy Mech Parts & Subassy's												
1	Flange/mntng plate fab	ea	1	600.00	eu	0.6	1	40.0	40	MS	37.73	1.5	2.1
2	CF feed-thrus for electrn	ea	8	200.00	eu	1.6	0	0.0	0		0.00	0.0	1.6
3	Brazing & fixtures	lot	1	100.00	eu	0.1	1	20.0	20	MU	35.92	0.7	0.8
4	Feedthrus welding	lot	1	50.00	eu	0.1	1	20.0	20	MS	37.73	0.8	0.8
5	Blades fab	ea	2	100.00	eu	0.2	2	20.0	40	MS	37.73	1.5	1.7
6	In-vac parts & elec fab	lot	1	200.00	eu	0.2	1	40.0	40	MS	37.73	1.5	1.7
7	LCW hardware	lot	1	100.00	eu	0.1	1	8.0	8	MU	35.92	0.3	0.4
8	2-axis translation mech	ea	1	3000.00	eu	3.0	0	0.0	0		0.00	0.0	3.0
9	Outside vac mntng hardwre	lot	1	500.00	eu	0.5	1	20.0	20	MS	37.73	0.8	1.3
10	Blade alignment fixtures	lot	1	200.00	eu	0.2	1	20.0	20	MS	37.73	0.8	1.0
** Subtotal **						6.6			208			7.8	14.3
** WBS: 1.2.3.2.2.2.2	Fab/Buy Electrical and Controls												
1	Bias power supply	ea	2	3000.00	eu	6.0	2	8.0	16	EI	33.00	0.5	6.5
2	ILC & SBX	ea	3	1500.00	eu	4.5	3	20.0	60	EI	33.00	2.0	6.5
3	Electrometer	ea	2	1695.00	cp	3.4	2	8.0	16	EI	33.00	0.5	3.9
4	Eurocard crate	ea	1	1000.00	eu	1.0	1	16.0	16	EI	33.00	0.5	1.5
5	Thermocouples & controls	ea	2	500.00	eu	1.0	2	8.0	16	EI	33.00	0.5	1.5
6	Stepper motor controller	ea	1	3000.00	eu	3.0	1	16.0	16	EI	33.00	0.5	3.5
7	Cables	lot	1	1000.00	eu	1.0	1	40.0	40	EI	33.00	1.3	2.3
8	Flow switch	ea	2	400.00	eu	0.8	2	4.0	8	EI	33.00	0.3	1.1
** Subtotal **						20.7			188			6.2	26.9
** WBS: 1.2.3.2.2.2.3	Fab/Buy Support Stand												
1	Slides mounting hardwre	ea	1	200.00	eu	0.2	1	8.0	8	MS	37.73	0.3	0.5
2	Support post & hardware	lot	1	3000.00	eu	3.0	1	8.0	8	MS	37.73	0.3	3.3
3	Misc hardwre & fixtures	lot	1	1000.00	eu	1.0	1	40.0	40	MS	37.73	1.5	2.5
** Subtotal **						4.2			56			2.1	6.3
** WBS: 1.2.3.2.2.2.4	Bellows												
1	Welded bellows assy	ea	2	4000.00	A91	8.0	0	0.0	0		0.00	0.0	8.0
2	Blank flanges,gaskets,etc	lot	2	300.00	cp	0.6	0	0.0	0		0.00	0.0	0.6

Technical Components Cost Estimate

ITM NBR	ITM DESCRIPTION	UNIT MEAS	NBR UNITS	UNIT COST	COST BASIS	TOTAL ISC K$	LBR UNTS	HRS/ UNIT	TOTAL HRS	CRAFT CODE	CRAFT RATE	TOTAL LABOR K$	ISC LABOR K$
3	Inspect,clean,bake	lot	2	50.00	eu	0.1	2	2.0	4	MU	35.92	0.1	0.2
** Subtotal **						8.7			4			0.1	8.8
** WBS: 1.2.3.2.2.2.5	Assemble, Bakeout, Test (Assembly Shop)												
1	Assemble/test PBPM mech	ea	1	500.00	eu	0.5	2	20.0	40	MU	35.92	1.4	1.9
2	Assemble/test PBPM elec	ea	1	500.00	eu	0.5	1	40.0	40	EI	33.00	1.3	1.8
3	Bakeout/UHV pre-qualify	ea	1	500.00	eu	0.5	1	40.0	40	MU	35.92	1.4	1.9
4	Fiducialization		0	0.00		0.0	2	16.0	32	MU	35.92	1.1	1.1
5	Misc assy equip,jackets,	lot	1	1000.00	eu	1.0	1	20.0	20	MU	35.92	0.7	1.7
** Subtotal **						2.5			172			6.1	8.6
** WBS: 1.2.3.2.2.2.6	Installation												
1	LCW Hardware & connection	lot	1	300.00	eu	0.3	2	20.0	40	MU	35.92	1.4	1.7
2	Transport & on-site setup	lot	1	200.00	eu	0.2	2	8.0	16	MU	35.92	0.6	0.8
3	Vac assemble & leak check	lot	1	100.00	eu	0.1	2	16.0	32	MU	35.92	1.1	1.2
4	Installation alignment		0	0.00		0.0	2	16.0	32	MS	37.73	1.2	1.2
5	Mech install,test,debug	lot	1	100.00	eu	0.1	2	20.0	40	MU	35.92	1.4	1.5
6	ELec. installation	lot	1	100.00	eu	0.1	1	20.0	20	IEL	62.85	1.3	1.4
7	Final bake & UHV qualify		0	0.00		0.0	2	20.0	40	MU	35.92	1.4	1.4
** Subtotal **						0.8			220			8.5	9.3
** WBS: 1.2.3.2.2.3.1	Fab/Buy Mech Parts & Subassy's												
1	Machine absorber blades	ea	2	1000.00	A91	2.0	2	40.0	80	MS	37.73	3.0	5.0
2	Braze absorber blades	ea	2	100.00	eu	0.2	2	20.0	40	MS	37.73	1.5	1.7
3	Brazing tooling/fixtures	ea	1	200.00	eu	0.2	1	20.0	20	MS	37.73	0.8	1.0
4	Blade/pivot mounting	ea	2	500.00	A91	1.0	2	60.0	120	MS	37.73	4.5	5.5
5	Pneumatic actuator mechan	ea	2	500.00	eu	1.0	2	40.0	80	MS	37.73	3.0	4.0
6	Limit stops & switches	ea	2	100.00	eu	0.2	2	20.0	40	MS	37.73	1.5	1.7
7	Bellws/conflat ass'y/weld	ea	2	1000.00	A91	2.0	2	40.0	80	MS	37.73	3.0	5.0
** Subtotal **						6.6			460			17.4	24.0
** WBS: 1.2.3.2.2.3.2	Fab/Buy Electrical and Controls												
1	ILC & SBX	ea	1	1500.00	eu	1.5	1	20.0	20	EI	33.00	0.7	2.2
2	Cables	lot	1	200.00	eu	0.2	1	8.0	8	EI	33.00	0.3	0.5
3	Flow switch & interlocks	ea	2	400.00	eu	0.8	2	4.0	8	EI	33.00	0.3	1.1
4	Position indicators	set	1	500.00	eu	0.5	1	8.0	8	EI	33.00	0.3	0.8
5	Air solenoids	ea	4	500.00	eu	2.0	4	8.0	32	EI	33.00	1.1	3.1
6	Air pressure interlocks	ea	1	500.00	eu	0.5	1	16.0	16	EI	33.00	0.5	1.0
** Subtotal **						5.5			92			3.0	8.5
** WBS: 1.2.3.2.2.3.3	Fab/Buy Vacuum Chamber & Supports												
1	Custom vacuum chamber	ea	1	8000.00	A91	8.0	1	40.0	40	MU	35.92	1.4	9.4
2	Misc flanges & UHV hardwr	lot	1	2500.00	eu	2.5	0	0.0	0		0.00	0.0	2.5
3	Mounting struts/hardware	ea	6	500.00	A91	3.0	6	8.0	48	MS	37.73	1.8	4.8
4	Support posts,frame,hrdwr	lot	1	1500.00	A91	1.5	1	40.0	40	MS	37.73	1.5	3.0
** Subtotal **						15.0			128			4.8	19.8
** WBS: 1.2.3.2.2.3.4	Vacuum Pumping, Gauges, Controllers, P.S.												
1	Ion pump, 400 l/s	ea	1	7527.00	A92	7.5	1	4.0	4	MU	35.92	0.1	7.7
2	Ion pump controller	ea	1	2180.00	A92	2.2	1	4.0	4	EI	33.00	0.1	2.3
3	Ion pump cable,bakeable	ea	1	250.00	A91	0.2	1	4.0	4	EI	33.00	0.1	0.4
4	IEEE-48 cable,3m cntrller	ea	1	421.00	A92	0.4	0	0.0	0		0.00	0.0	0.4
5	Roughing valve	ea	2	650.00	A91	1.3	0	0.0	0		0.00	0.0	1.3
6	Ion gauge & controls	ea	1	3500.00	A91	3.5	1	4.0	4	MU	35.92	0.1	3.6
7	Ion gauge cable, bakeable	ea	1	250.00	cp	0.2	1	4.0	4	EI	33.00	0.1	0.4
8	Junction box,IG cable	ea	1	200.00	eu	0.2	1	4.0	4	EI	33.00	0.1	0.3
9	Interlock cable	ea	1	100.00	eu	0.1	0	0.0	0		0.00	0.0	0.1
** Subtotal **						15.7			24			0.8	16.5

Technical Components Cost Estimate

ITM NBR	ITM DESCRIPTION	UNIT MEAS	NBR UNITS	UNIT COST COST	BASIS	TOTAL ISC K$	LBR UNTS	HRS/ UNIT	TOTAL HRS	CRAFT CODE	CRAFT RATE	TOTAL LABOR K$	ISC + LABOR K$
** WBS: 1.2.3.2.2.3.5	Assemble, Bakeout, Test												
1	Assemble & test	ea	1	500.00	eu	0.5	2	80.0	160	MU	35.92	5.7	6.2
2	Bakeout & UHV qualify	lot	1	500.00	eu	0.5	2	40.0	80	MS	37.73	3.0	3.5
3	Survey/calibration		0	0.00		0.0	2	16.0	32	MU	35.92	1.1	1.1
4	Misc tools,fixtures,cart,	lot	1	1000.00	eu	1.0	1	80.0	80	MU	35.92	2.9	3.9
** Subtotal **						2.0			352			12.8	14.8
** WBS: 1.2.3.2.2.3.6	Installation												
1	LCW hardware/connections	lot	1	300.00	eu	0.3	2	16.0	32	MU	35.92	1.1	1.4
2	Transport/on-site setup	lot	1	200.00	eu	0.2	2	16.0	32	MU	35.92	1.1	1.3
3	Vac assemble & leak check	lot	1	50.00	eu	0.1	2	16.0	32	MU	35.92	1.1	1.2
4	Installation alignment		0	0.00		0.0	2	16.0	32	MS	37.73	1.2	1.2
5	Pneumatic hardware/cnnctn	lot	1	300.00	eu	0.3	2	16.0	32	MU	35.92	1.1	1.4
6	Mech install/test/debug	lot	1	50.00	eu	0.1	2	16.0	32	MU	35.92	1.1	1.2
7	Elec installation		0	0.00		0.0	1	16.0	16	IEL	62.85	1.0	1.0
** Subtotal **						0.9			208			8.0	8.9
** WBS: 1.2.3.2.2.3.7	Titanium Sublimation Pump												
1	TSP pump spool piece	ea	1	2700.00	A91	2.7	0	0.0	0		0.00	0.0	2.7
2	TSP filaments & controllr	ea	1	3500.00	eu	3.5	1	8.0	8	EI	33.00	0.3	3.8
3	Flanges & UHV hardware	lot	1	500.00	eu	0.5	0	0.0	0		0.00	0.0	0.5
4	Misc (extrusions, etc.)	lot	1	1000.00	eu	1.0	1	20.0	20	MS	37.73	0.8	1.8
** Subtotal **						7.7			28			1.0	8.7
** WBS: 1.2.3.2.2.3.8	Isolation Valve												
1	Valve & controllr proc.	ea	1	18000.00	A91	18.0	0	0.0	0		0.00	0.0	18.0
2	Prelim assemble & test	lot	1	50.00	eu	0.1	1	8.0	8	MU	35.92	0.3	0.3
3	Inspection, cleaning, etc	lot	1	50.00	eu	0.1	1	4.0	4	MU	35.92	0.1	0.2
4	Cables & connectors	lot	1	200.00	eu	0.2	1	2.0	2	EI	33.00	0.1	0.3
5	Blank flanges & hardware	lot	2	200.00	eu	0.4	0	0.0	0		0.00	0.0	0.4
** Subtotal **						18.7			14			0.5	19.2
** WBS: 1.2.3.2.2.4.1	Fast Valve												
1	Modified VAT fast shutter	ea	1	26000.00	A91	26.0	0	0.0	0		0.00	0.0	26.0
** Subtotal **						26.0			0			0.0	26.0
** WBS: 1.2.3.2.2.4.2	Fab/Buy Electrical and Controls												
1	Cables & connectors	lot	1	500.00	A91	0.5	1	8.0	8	EI	33.00	0.3	0.8
2	Air pressure interlocks	ea	1	500.00	eu	0.5	1	16.0	16	EI	33.00	0.5	1.0
3	Junction box,IG cable	ea	3	200.00	eu	0.6	0	0.0	0		0.00	0.0	0.6
4	Interlock cable	ea	1	500.00	eu	0.5	0	0.0	0		0.00	0.0	0.5
** Subtotal **						2.1			24			0.8	2.9
** WBS: 1.2.3.2.2.4.3	Bellows												
1	Welded bellows assy	ea	1	3000.00	A91	3.0	1	4.0	4	MS	37.73	0.2	3.2
2	Blank flanges,gaskets,etc	lot	1	300.00	cp	0.3	0	0.0	0		0.00	0.0	0.3
3	Inspect,clean,bake	lot	1	50.00	eu	0.1	1	4.0	4	MU	35.92	0.1	0.2
** Subtotal **						3.3			8			0.3	3.6
** WBS: 1.2.3.2.2.4.4	Aperture Plate												
1	Water-cooled absorber	ea	1	800.00	A91	0.8	1	40.0	40	MS	37.73	1.5	2.3
2	Brazing,fixtures,tooling	lot	1	200.00	eu	0.2	1	30.0	30	MU	35.92	1.1	1.3
3	Flange gaskets & hardware	lot	2	200.00	eu	0.4	1	10.0	10	MS	37.73	0.4	0.8
** Subtotal **						1.4			80			3.0	4.4
** WBS: 1.2.3.2.2.4.5	Assemble, Bakeout, Test												
1	Assemble & test	ea	1	500.00	eu	0.5	1	80.0	80	MU	35.92	2.9	3.4
2	Survey/calibration		0	0.00		0.0	1	16.0	16	MU	35.92	0.6	0.6

Technical Components Cost Estimate

ITM NBR	ITM DESCRIPTION	UNIT MEAS	NBR UNITS	UNIT COST	COST BASIS	TOTAL ISC K$	LBR UNTS	HRS/ UNIT	TOTAL HRS	CRAFT CODE	CRAFT RATE	TOTAL LABOR K$	ISC LABOR K$
** Subtotal **						0.5			96			3.4	3.9
** WBS: 1.2.3.2.2.4.6	Installation												
1	Pneumatic hardwar/cnnctns	lot	1	300.00	eu	0.3	1	16.0	16	MU	35.92	0.6	0.9
2	Mech install/test/debug	lot	1	50.00	eu	0.1	1	16.0	16	MU	35.92	0.6	0.6
3	Elec installation		0	0.00		0.0	1	16.0	16	IEL	62.85	1.0	1.0
** Subtotal **						0.3			48			2.2	2.5
** WBS: 1.2.3.2.2.5.1	Fab/Buy Mech Parts & Subassy's												
1	Sintered tungsten shutter	ea	1	4000.00	eu	4.0	1	40.0	40	MS	37.73	1.5	5.5
2	Shutter flange-mounting	ea	1	500.00	eu	0.5	1	40.0	40	MS	37.73	1.5	2.0
3	In-vac position stops/mon	ea	1	1500.00	eu	1.5	1	80.0	80	MS	37.73	3.0	4.5
4	Bellows/cnflat ass'y/weld	ea	1	2000.00	eu	2.0	1	20.0	20	MS	37.73	0.8	2.8
5	Pneumatic actuatr/mountng	ea	1	2000.00	eu	2.0	1	120.0	120	MS	37.73	4.5	6.5
** Subtotal **						10.0			300			11.3	21.3
** WBS: 1.2.3.2.2.5.2	Fab/Buy Electrical and Controls												
1	ILC & SBX	ea	1	1500.00	eu	1.5	1	16.0	16	EI	33.00	0.5	2.0
2	Cables	lot	1	200.00	eu	0.2	1	16.0	16	EI	33.00	0.5	0.7
3	Position indicators	set	1	200.00	eu	0.2	1	16.0	16	EI	33.00	0.5	0.7
4	Air solenoids	ea	1	200.00	eu	0.2	1	8.0	8	EI	33.00	0.3	0.5
5	Air pressure interlocks	ea	1	200.00	eu	0.2	1	16.0	16	EI	33.00	0.5	0.7
** Subtotal **						2.3			72			2.4	4.7
** WBS: 1.2.3.2.2.5.3	Fab/Buy Vacuum Chamber & Supports												
1	Custom vacuum chamber	ea	1	5000.00	A91	5.0	1	20.0	20	MU	35.92	0.7	5.7
2	Misc flanges & UHV hardwr	lot	1	1000.00	eu	1.0	0	0.0	0		0.00	0.0	1.0
3	Roughing valve	ea	2	650.00	A91	1.3	0	0.0	0		0.00	0.0	1.3
4	Mounting struts/hardware	ea	6	500.00	A91	3.0	6	8.0	48	MS	37.73	1.8	4.8
5	Support posts	ea	2	1000.00	eu	2.0	2	20.0	40	MS	37.73	1.5	3.5
** Subtotal **						12.3			108			4.0	16.3
** WBS: 1.2.3.2.2.5.4	Vacuum Pumping, Gauges, Controllers, P.S.												
1	Ion pump, 220 l/s	ea	1	4865.00	A91	4.9	1	4.0	4	MU	35.92	0.1	5.0
2	Ion pump controller	ea	1	2500.00	A91	2.5	1	4.0	4	EI	33.00	0.1	2.6
3	Ion pump cable, bakeable	ea	1	250.00	A91	0.2	0	0.0	0		0.00	0.0	0.2
4	IEEE-488 cable,3m cntller	ea	1	150.00	cp	0.1	0	0.0	0		0.00	0.0	0.1
5	Ion gauge & controls	ea	1	3500.00	A91	3.5	1	4.0	4	MU	35.92	0.1	3.6
6	Ion gauge cable, bakeable	ea	1	250.00	cp	0.2	1	4.0	4	EI	33.00	0.1	0.4
7	Junction box, IG cable	ea	1	200.00	eu	0.2	0	0.0	0		0.00	0.0	0.2
8	Ion gauge controller	ea	1	3500.00	cp	3.5	0	0.0	0		0.00	0.0	3.5
9	Interlock cable	ea	1	100.00	eu	0.1	0	0.0	0		0.00	0.0	0.1
** Subtotal **						15.3			16			0.6	15.9
** WBS: 1.2.3.2.2.5.5	Assemble, Bakeout, Test												
1	Assemble & test	lot	1	500.00	eu	0.5	2	80.0	160	MU	35.92	5.7	6.2
2	Pre-bakeout tungstn block	ea	1	300.00	eu	0.3	1	20.0	20	MU	35.92	0.7	1.0
3	Survey/calibration		0	0.00		0.0	2	16.0	32	MU	35.92	1.1	1.1
3	Bakeout & UHV qualify	ea	1	500.00	eu	0.5	2	40.0	80	MU	35.92	2.9	3.4
4	Misc tools,fixtures,cart,	lot	1	1000.00	eu	1.0	1	40.0	40	MU	35.92	1.4	2.4
** Subtotal **						2.3			332			11.9	14.2
** WBS: 1.2.3.2.2.5.6	Installation												
1	Transport & on-site setup	lot	1	200.00	eu	0.2	2	16.0	32	MU	35.92	1.1	1.3
2	Vac assemble & leak check	lot	1	50.00	eu	0.1	2	16.0	32	MU	35.92	1.1	1.2
3	Instlltn algnmnt (stnd)		0	0.00		0.0	2	16.0	32	MS	37.73	1.2	1.2
4	Pneumatic hardwar/cnnctns	lot	1	300.00	eu	0.3	1	16.0	16	MU	35.92	0.6	0.9
5	Mech install,test,debug	lot	1	50.00	eu	0.1	2	16.0	32	MU	35.92	1.1	1.2
6	Elec installation		0	0.00		0.0	1	16.0	16	EI	33.00	0.5	0.5

Technical Components Cost Estimate

ITM NBR	ITM DESCRIPTION	UNIT MEAS	NBR UNITS	UNIT COST	COST BASIS	TOTAL ISC K$	LBR UNTS	HRS/ UNIT	TOTAL HRS	CRAFT CODE	CRAFT RATE	TOTAL LABOR K$	ISC + LABOR K$
** Subtotal **						0.6			160			5.8	6.4
** WBS: 1.2.3.2.2.5.7	Shield Wall Transition Spool												
1	SWT spool piece	ea	1	2500.00	A91	2.5	1	4.0	4	MS	37.73	0.2	2.7
2	Misc. flanges & UHV hrdwr	lot	1	500.00	eu	0.5	1	4.0	4	MS	37.73	0.2	0.7
3	Lead shielding & supports	lot	1	500.00	eu	0.5	1	40.0	40	MS	37.73	1.5	2.0
4	Struts and hardware	lot	2	500.00	A91	1.0	2	8.0	16	MS	37.73	0.6	1.6
5	Misc extrusions, etc.	lot	1	1000.00	eu	1.0	1	40.0	40	MS	37.73	1.5	2.5
** Subtotal **						5.5			104			3.9	9.4
** WBS: 1.2.3.2.2.5.8	Isolation Valve												
1	Valve & controller proc	ea	1	15000.00	vq	15.0	0	0.0	0		0.00	0.0	15.0
2	Prelim assy & test	lot	1	50.00	eu	0.1	1	8.0	8	MU	35.92	0.3	0.3
3	Inspection,cleaning,etc.	lot	1	50.00	eu	0.1	1	4.0	4	MU	35.92	0.1	0.2
4	Cables & connectors	ea	1	200.00	eu	0.2	1	2.0	2	EI	33.00	0.1	0.3
5	Blank flanges & hardware	lot	2	200.00	eu	0.4	0	0.0	0		0.00	0.0	0.4
** Subtotal **						15.7			14			0.5	16.2
** WBS: 1.2.3.2.2.6.1	Fab/Buy Mech Parts & Subassy's												
1	Flange & mntng plate fab	ea	1	600.00	eu	0.6	1	40.0	40	MS	37.73	1.5	2.1
2	Cf feedthru for electrncs	ea	8	200.00	eu	1.6	0	0.0	0		0.00	0.0	1.6
3	Brazing & fixtures	ea	1	100.00	eu	0.1	1	20.0	20	MU	35.92	0.7	0.8
4	Feedthrus - welding	ea	1	50.00	eu	0.1	1	20.0	20	MS	37.73	0.8	0.8
5	Blades fab	ea	4	100.00	eu	0.4	4	20.0	80	MS	37.73	3.0	3.4
6	In-vac parts & elec fab	lot	1	200.00	eu	0.2	1	40.0	40	MS	37.73	1.5	1.7
7	LCW Hardware	lot	1	100.00	eu	0.1	1	8.0	8	MU	35.92	0.3	0.4
8	2-axis transltn mechanism	ea	1	3000.00	eu	3.0	0	0.0	0		0.00	0.0	3.0
9	Outside-vac mntng hardwre	lot	1	500.00	eu	0.5	1	20.0	20	MS	37.73	0.8	1.3
10	Blade alignment fixtures	ea	1	200.00	eu	0.2	1	20.0	20	MS	37.73	0.8	1.0
** Subtotal **						6.8			248			9.3	16.1
** WBS: 1.2.3.2.2.6.2	Fab/Buy Electrical and Controls												
1	Bias power supply	ea	2	3000.00	eu	6.0	2	8.0	16	EI	33.00	0.5	6.5
2	ILC & SBX	ea	3	1500.00	eu	4.5	3	20.0	60	EI	33.00	2.0	6.5
3	Electrometer	ea	4	1695.00	cp	6.8	4	8.0	32	EI	33.00	1.1	7.8
4	Eurocard crate	ea	1	1000.00	eu	1.0	1	16.0	16	EI	33.00	0.5	1.5
5	Thermocouples & controls	ea	2	500.00	eu	1.0	2	8.0	16	EI	33.00	0.5	1.5
6	Stepper motor controller	ea	1	3000.00	eu	3.0	1	16.0	16	EI	33.00	0.5	3.5
7	Cables	lot	1	1000.00	eu	1.0	1	32.0	32	EI	33.00	1.1	2.1
8	Flow switch	ea	2	400.00	eu	0.8	2	4.0	8	EI	33.00	0.3	1.1
** Subtotal **						24.1			196			6.5	30.5
** WBS: 1.2.3.2.2.6.3	Fab/Buy Support Stand												
1	Slides mounting hardwr	ea	1	200.00	EU	0.2	1	8.0	8	MS	37.73	0.3	0.5
2	Support post & hardware	ea	1	3000.00	eu	3.0	1	8.0	8	MS	37.73	0.3	3.3
3	Misc hardware & fixtures	ea	1	1000.00	eu	1.0	1	40.0	40	MS	37.73	1.5	2.5
** Subtotal **						4.2			56			2.1	6.3
** WBS: 1.2.3.2.2.6.4	Bellows												
1	Welded bellows assy	ea	2	4000.00	A91	8.0	0	0.0	0		0.00	0.0	8.0
2	Blank flanges, gaskets,	lot	2	300.00	cp	0.6	0	0.0	0		0.00	0.0	0.6
3	Inspection,cleaning,bake	lot	2	50.00	eu	0.1	2	2.0	4	MU	35.92	0.1	0.2
** Subtotal **						8.7			4			0.1	8.8
** WBS: 1.2.3.2.2.6.5	Assemble, Bakeout, Test												
1	Assemble/test PBPM mech	ea	1	500.00	eu	0.5	2	20.0	40	MU	35.92	1.4	1.9
2	Assemble/test PBPM elec	ea	1	500.00	eu	0.5	1	40.0	40	EI	33.00	1.3	1.8
3	Bakeout/UHV pre-qualify	ea	1	500.00	eu	0.5	1	40.0	40	MU	35.92	1.4	1.9
4	Fiducialization		0	0.00		0.0	2	16.0	32	MU	35.92	1.1	1.1

Technical Components Cost Estimate

ITM NBR	ITM DESCRIPTION	UNIT MEAS	NBR UNITS	UNIT COST	COST BASIS	TOTAL ISC K$	LBR UNTS	HRS/ UNIT	TOTAL HRS	CRAFT CODE	CRAFT RATE	TOTAL LABOR K$	ISC + LABOR K$
5	Misc assy equip,jackets,	lot	1	1000.00	eu	1.0	1	20.0	20	MU	35.92	0.7	1.7
** Subtotal **						2.5			172			6.1	8.6
** WBS: 1.2.3.2.2.6.6	Installation												
1	LCW Hardware & connection	lot	1	300.00	eu	0.3	2	20.0	40	MU	35.92	1.4	1.7
2	Transport & on-site setup	lot	1	200.00	eu	0.2	2	8.0	16	MU	35.92	0.6	0.8
3	Vac assemble & leak check	lot	1	100.00	eu	0.1	2	16.0	32	MU	35.92	1.1	1.2
4	Installation alignment		0	0.00		0.0	2	16.0	32	MU	35.92	1.1	1.1
5	Mech install,test,debug	lot	1	100.00	eu	0.1	2	20.0	40	MU	35.92	1.4	1.5
6	ELec. installation	lot	1	100.00	eu	0.1	1	20.0	20	IEL	62.85	1.3	1.4
7	Final bake & UHV qualify		0	0.00		0.0	2	20.0	40	MU	35.92	1.4	1.4
** Subtotal **						0.8			220			8.4	9.2
** WBS: 1.2.3.2.2.7.1	Fab/Buy Mech Parts & Subassy's												
1	Misc machine shop effort	lot	1	1000.00	eu	1.0	1	80.0	80	MS	37.73	3.0	4.0
2	Misc mech tech & tools	lot	1	1000.00	eu	1.0	1	80.0	80	MU	35.92	2.9	3.9
** Subtotal **						2.0			160			5.9	7.9
** WBS: 1.2.3.2.2.7.2	Fab/Buy Electical and Controls												
1	Cables,valve actuation &	lot	3	100.00	eu	0.3	3	8.0	24	EI	33.00	0.8	1.1
2	X-connect blocks & frame	ea	1	500.00	eu	0.5	1	40.0	40	EI	33.00	1.3	1.8
3	Relays blocks & frame	ea	1	580.00	cp	0.6	1	40.0	40	EI	33.00	1.3	1.9
4	48 Ch. opto-isolator	ea	1	700.00	cp	0.7	1	40.0	40	EI	33.00	1.3	2.0
5	Cable trays, conduit, etc	lot	1	2000.00	eu	2.0	1	80.0	80	IEL	62.85	5.0	7.0
6	Double elec. rack	ea	1	1300.00	eu	1.3	1	40.0	40	EI	33.00	1.3	2.6
7	BA panel 3 ph 30A	ea	1	50.00	cp	0.1	1	1.0	1	EI	33.00	0.0	0.1
8	Breaker panel	ea	2	200.00	cp	0.4	2	4.0	8	EI	33.00	0.3	0.7
9	Plug strip	ea	2	20.00	eu	0.0	2	4.0	8	EI	33.00	0.3	0.3
10	Rack fans	ea	2	50.00	eu	0.1	2	2.0	4	EI	33.00	0.1	0.2
11	Flow switches/interlocks	ea	2	400.00	eu	0.8	2	8.0	16	EI	33.00	0.5	1.3
** Subtotal **						6.8			301			12.3	19.1
** WBS: 1.2.3.2.2.7.3	Fab/Buy Vacuum Chamber & Supports												
1	Misc flanges,viewprts,etc	lot	1	3000.00	eu	3.0	0	0.0	0		0.00	0.0	3.0
2	Roughing valves	ea	4	650.00	cp	2.6	0	0.0	0		0.00	0.0	2.6
3	Misc. unistrut/hardware	lot	1	500.00	eu	0.5	1	20.0	20	MU	35.92	0.7	1.2
** Subtotal **						6.1			20			0.7	6.8
** WBS: 1.2.3.2.2.7.4	Vacuum Pumping, Gauges, Controllers, P.S.												
1	RGA system	ea	1	12000.00	cp	12.0	1	40.0	40	MU	35.92	1.4	13.4
2	RGA cable, bakeable	ea	1	250.00	cp	0.2	1	8.0	8	EI	33.00	0.3	0.5
3	Junction box, RGA cable	ea	1	200.00	eu	0.2	0	0.0	0		0.00	0.0	0.2
4	Interlock cable	ea	1	100.00	eu	0.1	0	0.0	0		0.00	0.0	0.1
** Subtotal **						12.5			48			1.7	14.3
** WBS: 1.2.3.2.2.7.5	Assemble, Bakeout, Test												
1	Misc assemble & test	ea	1	1000.00	eu	1.0	2	40.0	80	MU	35.92	2.9	3.9
2	Misc bakeout/UHV qualify	lot	1	1000.00	eu	1.0	2	40.0	80	MU	35.92	2.9	3.9
3	Survey/calibration		0	0.00		0.0	3	32.0	96	MU	35.92	3.4	3.4
** Subtotal **						2.0			256			9.2	11.2
** WBS: 1.2.3.2.2.7.6	Installation												
1	Shielding wall modify	lot	1	500.00	eu	0.5	2	40.0	80	MU	35.92	2.9	3.4
2	Lead shielding installatn	lot	1	500.00	eu	0.5	1	40.0	40	MU	35.92	1.4	1.9
3	Installatn final alignment		0	0.00		0.0	2	40.0	80	MU	35.92	2.9	2.9
4	F.E. pneumatic service	ea	1	1000.00	eu	1.0	1	40.0	40	MU	35.92	1.4	2.4
5	F.E. LCW service	lot	1	1000.00	eu	1.0	1	40.0	40	MU	35.92	1.4	2.4
6	Mech install/test/debug	lot	1	50.00	eu	0.1	1	40.0	40	MU	35.92	1.4	1.5
7	Elec installation		0	0.00		0.0	1	80.0	80	IEL	62.85	5.0	5.0

Technical Components Cost Estimate

ITM NBR	ITM DESCRIPTION	UNIT MEAS	NBR UNITS	UNIT COST	COST BASIS	TOTAL ISC K$	LBR UNTS	HRS/ UNIT	TOTAL HRS	CRAFT CODE	CRAFT RATE	TOTAL LABOR K$	ISC + LABOR K$
8	LCW temp control system	ea	1	5000.00	A90	5.0	1	40.0	40	EI	33.00	1.3	6.3
** Subtotal **						8.1			440			17.8	25.9
** WBS: 1.2.3.2.2.8		Safety Systems											
1	ILC & SBX	ea	2	1500.00	eu	3.0	2	20.0	40	EI	33.00	1.3	4.3
2	Eurocard crate	ea	2	800.00	eu	1.6	0	0.0	0		0.00	0.0	1.6
3	Key panel	ea	1	400.00	cp	0.4	0	0.0	0		0.00	0.0	0.4
4	Monitor lights panel	ea	6	500.00	cp	3.0	0	0.0	0		0.00	0.0	3.0
5	Push button panel	ea	1	500.00	cp	0.5	0	0.0	0		0.00	0.0	0.5
6	Breaker panel	ea	1	500.00	cp	0.5	0	0.0	0		0.00	0.0	0.5
7	Cables	lot	1	500.00	eu	0.5	0	0.0	0		0.00	0.0	0.5
8	Wiring assembly		0	0.00		0.0	1	120.0	120	EI	33.00	4.0	4.0
9	Video camera & lens	ea	1	800.00	cp	0.8	0	0.0	0		0.00	0.0	0.8
10	Video monitor	ea	1	300.00	cp	0.3	0	0.0	0		0.00	0.0	0.3
11	RG59 coax,camera/monitor	ea	1	50.00	eu	0.1	1	2.0	2	EI	33.00	0.1	0.1
12	Video connectors	ea	2	5.00	eu	0.0	2	0.5	1	EI	33.00	0.0	0.0
13	Misc hardware	lot	1	1000.00	eu	1.0	1	80.0	80	MS	37.73	3.0	4.0
14	Elec. installation		0	0.00		0.0	1	40.0	40	IEL	62.85	2.5	2.5
** Subtotal **						11.7			283			10.9	22.6
** WBS: 1.2.3.2.3.1.1		Fab/Buy Machined Parts & Subassy's											
1	Machine absorber blades	ea	2	1000.00	A91	2.0	2	40.0	80	MS	37.73	3.0	5.0
2	Braze absorber blades	ea	2	100.00	A91	0.2	2	20.0	40	MS	37.73	1.5	1.7
3	Brazing tooling/fixtures	ea	1	200.00	A91	0.2	1	20.0	20	MS	37.73	0.8	1.0
4	Blade/pivot mounting	ea	2	500.00	A91	1.0	2	60.0	120	MS	37.73	4.5	5.5
5	Actuator mechanism	ea	2	500.00	A91	1.0	2	40.0	80	MS	37.73	3.0	4.0
6	Limit stops & switches	ea	2	100.00	A91	0.2	2	20.0	40	MS	37.73	1.5	1.7
7	Bellws/conflat ass'y/weld	ea	2	1000.00	A91	2.0	2	40.0	80	MS	37.73	3.0	5.0
** Subtotal **						6.6			460			17.4	24.0
** WBS: 1.2.3.2.3.1.2		Fab/Buy Electrical and Controls											
1	Stepper/encoder/limits	ea	2	3000.00	eu	6.0	2	20.0	40	MS	37.73	1.5	7.5
2	Driver/encoder cables	ea	2	200.00	eu	0.4	1	16.0	16	EI	33.00	0.5	0.9
3	Flow switch & interlocks	ea	2	400.00	eu	0.8	2	4.0	8	EI	33.00	0.3	1.1
4	VME module,RS232,B-port	eat	1	800.00	eu	0.8	1	16.0	16	EI	33.00	0.5	1.3
5	CAble, RS232	ea	2	50.00	eu	0.1	0	0.0	0		0.00	0.0	0.1
6	Motor/encoder controllers	ea	2	2000.00	eu	4.0	2	8.0	16	EI	33.00	0.5	4.5
7	Triax cable, 100 '	lot	2	100.00	eu	0.2	2	8.0	16	EI	33.00	0.5	0.7
** Subtotal **						12.3			112			3.9	16.2
** WBS: 1.2.3.2.3.1.3		Fab/Buy Vacuum Chamber & Supports											
1	Custom vacuum chamber	ea	1	8000.00	A91	8.0	1	40.0	40	MU	35.92	1.4	9.4
2	Misc flanges/UHV hardware	lot	1	2500.00	eu	2.5	0	0.0	0		0.00	0.0	2.5
3	Mounting struts/hardware	ea	6	500.00	A91	3.0	6	8.0	48	MS	37.73	1.8	4.8
4	Support posts,frame,hrdwr	lot	1	1500.00	A91	1.5	1	40.0	40	MS	37.73	1.5	3.0
** Subtotal **						15.0			128			4.8	19.8
** WBS: 1.2.3.2.3.1.4		Vacuum Pumping, Gauges, Controllers, P.S.											
1	Ion pump, 400 l/s	ea	1	7500.00	A91	7.5	1	4.0	4	MU	35.92	0.1	7.6
2	Ion pump controller	ea	1	2500.00	A91	2.5	0	4.0	0	EI	33.00	0.0	2.5
3	Ion pump cable,bakeable	ea	1	250.00	A91	0.2	0	0.0	0		0.00	0.0	0.2
4	IEEE-48 cable,3m cntrller	ea	1	150.00	cp	0.1	0	0.0	0		0.00	0.0	0.1
5	Roughing valve	ea	2	650.00	A91	1.3	0	0.0	0		0.00	0.0	1.3
6	Ion gauge & controls	ea	1	3500.00	A91	3.5	1	4.0	4	MU	35.92	0.1	3.6
7	Ion gauge cable, bakeable	ea	1	250.00	cp	0.2	1	4.0	4	EI	33.00	0.1	0.4
8	Junction box,IG cable	ea	1	200.00	eu	0.2	1	4.0	4	EI	33.00	0.1	0.3
9	Interlock cable	ea	1	100.00	eu	0.1	0	0.0	0		0.00	0.0	0.1
** Subtotal **						15.8			16			0.6	16.3

Technical Components Cost Estimate

ITM NBR	ITM DESCRIPTION	UNIT MEAS	NBR UNITS	UNIT COST	COST BASIS	TOTAL ISC K$	LBR UNTS	HRS/ UNIT	TOTAL HRS	CRAFT CODE	CRAFT RATE	TOTAL LABOR K$	ISC + LABOR K$
** WBS: 1.2.3.2.3.1.5	Assemble, Bakeout, Test												
1	Assemble & test	ea	1	500.00	eu	0.5	2	80.0	160	MU	35.92	5.7	6.2
2	Bakeout & UHV qualify	lot	1	500.00	eu	0.5	2	40.0	80	MU	35.92	2.9	3.4
3	Survey/calibration		0	0.00		0.0	2	16.0	32	MU	35.92	1.1	1.1
4	Misc tools,fixtures,cart	lot	1	1000.00	eu	1.0	1	80.0	80	MU	35.92	2.9	3.9
** Subtotal **						2.0			352			12.6	14.6
** WBS: 1.2.3.2.3.1.6	Installation												
1	LCW hardware/connections	lot	1	300.00	eu	0.3	2	16.0	32	MU	35.92	1.1	1.4
2	Transport/on-site setup	lot	1	200.00	eu	0.2	2	16.0	32	MU	35.92	1.1	1.3
3	Vac assemble & leak check	lot	1	50.00	eu	0.1	2	16.0	32	MU	35.92	1.1	1.2
4	Installation alignment		0	0.00		0.0	2	16.0	32	MS	37.73	1.2	1.2
5	Mech install/test/debug	lot	1	50.00	eu	0.1	2	16.0	32	MU	35.92	1.1	1.2
6	Elec installation		0	0.00		0.0	1	16.0	16	IEL	62.85	1.0	1.0
** Subtotal **						0.6			176			6.8	7.4
** WBS: 1.2.3.2.3.1.7	Beam Diagnostic Device												
1	Linear drive mech(VGassy)	ea	1	3000.00	cp	3.0	0	0.0	0		0.00	0.0	3.0
2	Mods for water cooling	ea	1	200.00	eu	0.2	1	20.0	20	MS	37.73	0.8	1.0
3	In-vac parts fab	lot	1	1000.00	eu	1.0	1	80.0	80	MS	37.73	3.0	4.0
4	Brazing & welding assy	ea	1	200.00	A91	0.2	1	20.0	20	MS	37.73	0.8	1.0
5	Phosphor coating	ea	1	500.00	eu	0.5	0	0.0	0		0.00	0.0	0.5
** Subtotal **						4.9			120			4.5	9.4
** WBS: 1.2.3.2.3.1.8	Collimating Spool												
1	Spool piece	ea	1	1250.00	A91	1.2	1	8.0	8	MU	35.92	0.3	1.5
2	Misc flanges,UHV hardware	lot	1	500.00	eu	0.5	0	0.0	0		0.00	0.0	0.5
3	Lead shielding & mounting	lot	1	500.00	eu	0.5	1	40.0	40	MS	37.73	1.5	2.0
** Subtotal **						2.2			48			1.8	4.0
** WBS: 1.2.3.2.3.1.9	Bellows												
1	Welded bellows assy	ea	1	3000.00	A91	3.0	1	4.0	4	MS	37.73	0.2	3.2
2	Blank flanges,gaskets,etc	lot	1	300.00	cp	0.3	0	0.0	0		0.00	0.0	0.3
3	Inspection,cleaning,bake	ea	1	50.00	eu	0.1	1	4.0	4	MU	35.92	0.1	0.2
** Subtotal **						3.3			8			0.3	3.6
** WBS: 1.2.3.2.3.1.10	Titanium Sublimation Pump												
1	TSP pump spool piece	ea	1	2700.00	A91	2.7	0	0.0	0		0.00	0.0	2.7
2	TSP filaments&controller	ea	1	3500.00	eu	3.5	1	8.0	8	EI	33.00	0.3	3.8
3	Flanges,& UHV hardware	lot	1	500.00	eu	0.5	0	0.0	0		0.00	0.0	0.5
4	Support post, misc hardwr	lot	1	1500.00	eu	1.5	1	20.0	20	MS	37.73	0.8	2.3
5	Struts & hardware	ea	6	500.00	A91	3.0	6	8.0	48	MU	35.92	1.7	4.7
6	Misc extrusns, mounts,etc	lot	1	1000.00	eu	1.0	1	20.0	20	MS	37.73	0.8	1.8
** Subtotal **						12.2			96			3.5	15.7
** WBS: 1.2.3.2.3.1.11	Isolation Valve												
1	Valve & contrllr proc.	ea	1	15000.00	vq	15.0	0	0.0	0		0.00	0.0	15.0
2	Prelim assembl & test	ea	1	50.00	eu	0.1	1	8.0	8	MU	35.92	0.3	0.3
3	Inspection,cleaning,etc.	lot	1	50.00	eu	0.1	1	4.0	4	MU	35.92	0.1	0.2
4	Cables & connectors	lot	1	200.00	eu	0.2	1	2.0	2	EI	33.00	0.1	0.3
5	Blank flanges & hardware	lot	2	200.00	eu	0.4	0	0.0	0		0.00	0.0	0.4
** Subtotal **						15.7			14			0.5	16.2
** WBS: 1.2.3.2.3.2.1	Fab/Buy Mech Parts & Subassy's												
1	Mirror polishing	ea	1	20300.00	A91	20.3	0	0.0	0		0.00	0.0	20.3
2	Optical coating	ea	1	1000.00	A88	1.0	0	0.0	0		0.00	0.0	1.0
3	Substrate parts machining	lot	1	3000.00	A91	3.0	0	0.0	0		0.00	0.0	3.0
4	Substrate brzng/leak chk	ea	1	200.00	eu	0.2	1	20.0	20	MU	35.92	0.7	0.9
5	Braze & leak chk fixtures	ea	1	200.00	A91	0.2	1	40.0	40	MU	35.92	1.4	1.6

Technical Components Cost Estimate

ITM NBR	ITM DESCRIPTION	UNIT MEAS	NBR UNITS	UNIT COST	COST BASIS	TOTAL ISC K$	LBR UNTS	HRS/ UNIT	TOTAL HRS	CRAFT CODE	CRAFT RATE	TOTAL LABOR K$	ISC + LABOR K$
6	UHV mirrr in-vac mounting	ea	1	1000.00	eu	1.0	1	120.0	120	MS	37.73	4.5	5.5
7	Mirror positioning mech	ea	1	1000.00	eu	1.0	1	80.0	80	MS	37.73	3.0	4.0
8	Mirror shippng crate/mnt	ea	1	800.00	A91	0.8	0	32.0	0	MS	37.73	0.0	0.8
9	Misc UHV flanges/hardware	lot	1	1000.00	eu	1.0	0	0.0	0		0.00	0.0	1.0
10	Bellows/conflat ass'y	ea	1	2500.00	A91	2.5	0	0.0	0		0.00	0.0	2.5
11	Tube/joystick ass'y	ea	1	200.00	A86	0.2	1	60.0	60	MS	37.73	2.3	2.5
12	Masks: parts & machining	ea	4	3000.00	A91	12.0	0	0.0	0		0.00	0.0	12.0
13	Masks:Braze & weld assy	ea	4	200.00	A91	0.8	4	40.0	160	MU	35.92	5.7	6.5
14	Lead shielding	ea	1	500.00	eu	0.5	1	40.0	40	MU	35.92	1.4	1.9
** Subtotal **						44.5			520			19.1	63.6
** WBS: 1.2.3.2.3.2.2	Fab/Buy Electrical and Controls												
1	Stepper/encoder/limits	ea	3	2500.00	eu	7.5	3	20.0	60	MS	37.73	2.3	9.8
2	Driver/encoder cables	ea	3	200.00	eu	0.6	3	16.0	48	EI	33.00	1.6	2.2
3	Flow switch & interlocks	ea	1	400.00	eu	0.4	1	4.0	4	EI	33.00	0.1	0.5
4	Module, VME, RS232,B-port	ea	1	800.00	eu	0.8	1	16.0	16	EI	33.00	0.5	1.3
5	Cable, RS232	ea	3	50.00	eu	0.1	0	0.0	0		0.00	0.0	0.1
6	Glow discharg optcl clean	ea	1	10000.00	eu	10.0	1	40.0	40	EI	33.00	1.3	11.3
** Subtotal **						19.5			168			5.8	25.3
** WBS: 1.2.3.2.3.2.3	Fab/Buy Vacuum Chamber & Supports												
1	Custom vacuum chamber	ea	1	10000.00	A91	10.0	0	0.0	0		0.00	0.0	10.0
2	Downstream mask chamber	ea	1	2500.00	cp	2.5	0	0.0	0		0.00	0.0	2.5
3	Misc. flanges/UHV hardwre	lot	1	1000.00	eu	1.0	0	0.0	0		0.00	0.0	1.0
4	Roughing valve	ea	2	650.00	cp	1.3	0	0.0	0		0.00	0.0	1.3
5	Mounting struts/hardware	ea	2	500.00	A91	1.0	2	8.0	16	MS	37.73	0.6	1.6
6	Motorized struts/hardware	ea	4	1000.00	eu	4.0	4	16.0	64	MS	37.73	2.4	6.4
7	Support posts	ea	1	1500.00	A91	1.5	1	40.0	40	MS	37.73	1.5	3.0
8	Pump welded bellws assy	ea	1	4000.00	A91	4.0	0	0.0	0		0.00	0.0	4.0
9	Bellws inspect/clean/bake	ea	1	50.00	eu	0.1	1	4.0	4	MU	35.92	0.1	0.2
** Subtotal **						25.4			124			4.7	30.0
** WBS: 1.2.3.2.3.2.4	Vacuum Pumping, Gauges, Controllers, P.S.												
1	Ion pump, 400 l/s	ea	1	7500.00	A91	7.5	1	8.0	8	MU	35.92	0.3	7.8
2	Ion pump controller	ea	1	2500.00	A91	2.5	1	8.0	8	EI	33.00	0.3	2.8
3	Ion pump cable,bakeable	ea	1	250.00	A91	0.2	0	0.0	0		0.00	0.0	0.2
4	IEEE-48 cable,3m cntrller	ea	1	150.00	cp	0.1	0	0.0	0		0.00	0.0	0.1
5	Ion gauge & controls	ea	1	3500.00	A91	3.5	1	8.0	8	MU	35.92	0.3	3.8
6	Ion gauge cable, bakeable	ea	1	250.00	cp	0.2	1	8.0	8	EI	33.00	0.3	0.5
7	Junction box,IG cable	ea	1	250.00	eu	0.2	0	0.0	0		0.00	0.0	0.2
8	Interlock cable	ea	1	100.00	eu	0.1	0	0.0	0		0.00	0.0	0.1
** Subtotal **						14.5			32			1.1	15.6
** WBS: 1.2.3.2.3.2.5	Assemble, Bakeout, Test												
1	Assemble & test	ea	1	500.00	eu	0.5	1	120.0	120	MS	37.73	4.5	5.0
2	Bakeout & UHV qualify	lot	1	500.00	eu	0.5	1	120.0	120	MU	35.92	4.3	4.8
3	Survey/calibration		0	0.00		0.0	2	16.0	32	MU	35.92	1.1	1.1
4	Misc tools/fixtrs/cart	ea	1	1000.00	eu	1.0	1	80.0	80	MS	37.73	3.0	4.0
** Subtotal **						2.0			352			13.0	15.0
** WBS: 1.2.3.2.3.2.6	Installation												
1	LCW hardware/connections	lot	1	300.00	eu	0.3	1	16.0	16	MU	35.92	0.6	0.9
2	Transport/on-site setup	lot	1	200.00	eu	0.2	2	16.0	32	MU	35.92	1.1	1.3
3	Vac assemble & leak check	lot	1	50.00	eu	0.1	1	20.0	20	MU	35.92	0.7	0.8
4	Installation alignment		0	0.00		0.0	2	32.0	64	MU	35.92	2.3	2.3
5	Mech install/test/debug	lot	1	500.00	eu	0.5	2	40.0	80	MU	35.92	2.9	3.4
6	Elec installation		0	0.00		0.0	1	20.0	20	IEL	62.85	1.3	1.3
** Subtotal **						1.1			232			8.9	9.9

Technical Components Cost Estimate

ITM NBR	ITM DESCRIPTION	UNIT MEAS	NBR UNITS	UNIT COST COST	BASIS	TOTAL ISC K$	LBR UNTS	HRS/ UNIT	TOTAL HRS	CRAFT CODE	CRAFT RATE	TOTAL LABOR K$	ISC LABOR K$
** WBS: 1.2.3.2.3.2.7	Bellows												
1	Welded bellows assy	ea	1	4000.00	A91	4.0	0	0.0	0		0.00	0.0	4.0
2	Blank flnges,gskts,etc	lot	2	300.00	cp	0.6	0	0.0	0		0.00	0.0	0.6
3	Inspct,clean,prelim bake	ea	2	50.00	eu	0.1	2	4.0	8	MU	35.92	0.3	0.4
** Subtotal **						4.7			8			0.3	5.0
** WBS: 1.2.3.2.3.2.8	Collimating Spool												
1	Spool piece	ea	1	2000.00	A91	2.0	1	8.0	8	MU	35.92	0.3	2.3
2	Misc flanges & UHV hrdwre	ea	1	500.00	eu	0.5	1	8.0	8	MS	37.73	0.3	0.8
3	Lead shielding/mounting	ea	1	500.00	eu	0.5	1	40.0	40	MS	37.73	1.5	2.0
** Subtotal **						3.0			56			2.1	5.1
** WBS: 1.2.3.2.3.2.9	Isolation Valve												
1	Valve & contrllr proc.	ea	1	15000.00	A91	15.0	1	8.0	8	MU	35.92	0.3	15.3
2	Prelim assmble & test	ea	1	50.00	eu	0.1	1	4.0	4	MU	35.92	0.1	0.2
3	Inspect,clean, etc	ea	1	50.00	eu	0.1	1	4.0	4	MU	35.92	0.1	0.2
4	Cables & connectors	lot	1	200.00	eu	0.2	1	2.0	2	EI	33.00	0.1	0.3
5	Blank flanges & hardware	lot	2	200.00	eu	0.4	0	0.0	0		0.00	0.0	0.4
** Subtotal **						15.7			18			0.6	16.3
** WBS: 1.2.3.2.3.3.1	Fab/Buy Mech Parts & Subassy's												
1	Mirror polishing	ea	1	20300.00	A91	20.3	0	0.0	0		0.00	0.0	20.3
2	Optical coating	ea	1	1000.00	A88	1.0	0	0.0	0		0.00	0.0	1.0
3	Substrate parts machining	lot	1	3000.00	A91	3.0	0	0.0	0		0.00	0.0	3.0
4	Substrate brzng/leak chk	ea	1	200.00	eu	0.2	1	40.0	40	MU	35.92	1.4	1.6
5	Braze & leak chk fixtures	ea	1	200.00	A91	0.2	1	40.0	40	MU	35.92	1.4	1.6
6	UHV mirrr in-vac mounting	ea	1	1000.00	eu	1.0	1	120.0	120	MS	37.73	4.5	5.5
7	Mirror positioning mech	ea	1	1000.00	eu	1.0	1	80.0	80	MS	37.73	3.0	4.0
8	Mirror shippng crate/mnt	ea	1	800.00	A91	0.8	1	32.0	32	MS	37.73	1.2	2.0
9	Misc UHV flanges/hardware	lot	1	1000.00	eu	1.0	0	0.0	0		0.00	0.0	1.0
10	Bellows/conflat ass'y	ea	1	2500.00	A91	2.5	0	0.0	0		0.00	0.0	2.5
11	Tube/joystick ass'y	ea	1	200.00	A86	0.2	1	60.0	60	MS	37.73	2.3	2.5
12	Masks: parts & machining	ea	4	3000.00	A91	12.0	0	0.0	0		0.00	0.0	12.0
13	Masks:Braze & weld assy	ea	4	200.00	A91	0.8	4	40.0	160	MU	35.92	5.7	6.5
14	Lead shielding	ea	1	500.00	eu	0.5	1	40.0	40	MU	35.92	1.4	1.9
** Subtotal **						44.5			572			21.1	65.6
** WBS: 1.2.3.2.3.3.2	Fab/Buy Electrical and Controls												
1	Stepper/encoder/limits	ea	3	2500.00	eu	7.5	3	20.0	60	MS	37.73	2.3	9.8
2	Driver/encoder cables	ea	3	200.00	eu	0.6	3	16.0	48	EI	33.00	1.6	2.2
3	Flow switch & interlocks	ea	1	400.00	eu	0.4	1	4.0	4	EI	33.00	0.1	0.5
4	Module, VME, RS232,B-port	ea	1	800.00	eu	0.8	1	16.0	16	EI	33.00	0.5	1.3
5	Cable, RS232	ea	3	50.00	eu	0.1	0	0.0	0		0.00	0.0	0.1
6	Glow discharg optcl clean	ea	1	10000.00	eu	10.0	1	40.0	40	EI	33.00	1.3	11.3
** Subtotal **						19.5			168			5.8	25.3
** WBS: 1.2.3.2.3.3.3	Fab/Buy Vacuum Chamber & Supports												
1	Custom vacuum chamber	ea	1	10000.00	A91	10.0	0	0.0	0		0.00	0.0	10.0
3	Misc. flanges/UHV hardwre	lot	1	1000.00	eu	1.0	0	0.0	0		0.00	0.0	1.0
4	Roughing valve	ea	2	650.00	cp	1.3	0	0.0	0		0.00	0.0	1.3
5	Mounting struts/hardware	ea	3	500.00	A91	1.5	3	8.0	24	MS	37.73	0.9	2.4
6	Motorized struts/hardware	ea	3	1000.00	eu	3.0	3	16.0	48	MS	37.73	1.8	4.8
7	Support posts	ea	1	1500.00	A91	1.5	1	40.0	40	MS	37.73	1.5	3.0
8	Pump welded bellws assy	ea	1	4000.00	A91	4.0	0	0.0	0		0.00	0.0	4.0
9	Bellws inspect/clean/bake	ea	1	50.00	eu	0.1	1	4.0	4	MU	35.92	0.1	0.2
** Subtotal **						22.4			116			4.4	26.7
** WBS: 1.2.3.2.3.3.4	Vacuum Pumping, Gauges, Controllers, P.S.												
1	Ion pump, 400 l/s	ea	1	7500.00	A91	7.5	1	8.0	8	MU	35.92	0.3	7.8
2	Ion pump controller	ea	1	2500.00	A91	2.5	1	8.0	8	EI	33.00	0.3	2.8

Technical Components Cost Estimate

ITM NBR	ITM DESCRIPTION	UNIT MEAS	NBR UNITS	UNIT COST	COST BASIS	TOTAL ISC K$	LBR UNTS	HRS/ UNIT	TOTAL HRS	CRAFT CODE	CRAFT RATE	TOTAL LABOR K$	ISC + LABOR K$
3	Ion pump cable,bakeable	ea	1	250.00	A91	0.2	0	0.0	0		0.00	0.0	0.2
4	IEEE-48 cable,3m cntrller	ea	1	150.00	cp	0.1	0	0.0	0		0.00	0.0	0.1
5	Ion gauge & controls	ea	1	3500.00	A91	3.5	1	8.0	8	MU	35.92	0.3	3.8
6	Ion gauge cable, bakeable	ea	1	250.00	cp	0.2	1	8.0	8	EI	33.00	0.3	0.5
7	Junction box,IG cable	ea	1	200.00	eu	0.2	0	0.0	0		0.00	0.0	0.2
8	Interlock cable	ea	1	100.00	eu	0.1	0	0.0	0		0.00	0.0	0.1
9	LCW 0.1deg temp cntrllr	ea	1	2000.00	eu	2.0	0	0.0	0		0.00	0.0	2.0
** Subtotal **						16.4			32			1.1	17.6
** WBS: 1.2.3.2.3.3.5	Assemble, Bakeout, Test												
1	Assemble & test	ea	1	500.00	eu	0.5	1	120.0	120	MS	37.73	4.5	5.0
2	Bakeout & UHV qualify	lot	1	500.00	eu	0.5	1	120.0	120	MU	35.92	4.3	4.8
3	Survey/calibration		0	0.00		0.0	2	16.0	32	MU	35.92	1.1	1.1
4	Misc tools/fixtrs/cart	ea	1	1000.00	eu	1.0	1	80.0	80	MS	37.73	3.0	4.0
** Subtotal **						2.0			352			13.0	15.0
** WBS: 1.2.3.2.3.3.6	Installation												
1	LCW hardware/connections	lot	1	300.00	eu	0.3	1	16.0	16	MU	35.92	0.6	0.9
2	Transport/on-site setup	lot	1	200.00	eu	0.2	2	16.0	32	MU	35.92	1.1	1.3
3	Vac assemble & leak check	lot	1	50.00	eu	0.1	1	20.0	20	MU	35.92	0.7	0.8
4	Installation alignment		0	0.00		0.0	2	32.0	64	MU	35.92	2.3	2.3
5	Mech install/test/debug	lot	1	500.00	eu	0.5	2	40.0	80	MU	35.92	2.9	3.4
6	Elec installation		0	0.00		0.0	1	20.0	20	IEL	62.85	1.3	1.3
** Subtotal **						1.1			232			8.9	9.9
** WBS: 1.2.3.2.3.3.7	Bellows												
1	Welded bellows assy	ea	2	4000.00	A91	8.0	0	0.0	0		0.00	0.0	8.0
2	Blank flnges,gskts,etc	lot	2	300.00	cp	0.6	0	0.0	0		0.00	0.0	0.6
3	Inspct,clean,prelim bake	ea	2	50.00	eu	0.1	2	4.0	8	MU	35.92	0.3	0.4
** Subtotal **						8.7			8			0.3	9.0
** WBS: 1.2.3.2.3.3.8	Collimating Spool												
1	Spool piece	ea	1	1000.00	A91	1.0	1	8.0	8	MU	35.92	0.3	1.3
2	Supprt post&mountng hrdwr	ea	1	1000.00	eu	1.0	1	20.0	20	MS	37.73	0.8	1.8
** Subtotal **						2.0			28			1.0	3.0
** WBS: 1.2.3.2.3.3.9	Isolation Valve												
1	Valve & contrllr proc.	ea	1	15000.00	A91	15.0	1	8.0	8	MU	35.92	0.3	15.3
2	Prelim assmble & test	ea	1	50.00	eu	0.1	1	4.0	4	MU	35.92	0.1	0.2
3	Inspect,clean, etc	ea	1	50.00	eu	0.1	1	4.0	4	MU	35.92	0.1	0.2
4	Cables & connectors	lot	1	200.00	eu	0.2	1	2.0	2	EI	33.00	0.1	0.3
5	Blank flanges & hardware	lot	2	200.00	eu	0.4	0	0.0	0		0.00	0.0	0.4
** Subtotal **						15.7			18			0.6	16.3
** WBS: 1.2.3.2.3.5.1.1	Bellows												
1	Welded bellows assy	ea	2	2500.00	A91	5.0	2	4.0	8	MS	37.73	0.3	5.3
2	Blank flanges,gaskets,etc	lot	2	300.00	cp	0.6	0	0.0	0		0.00	0.0	0.6
3	Inspection,cleaning,bake	ea	2	50.00	eu	0.1	2	4.0	8	MU	35.92	0.3	0.4
** Subtotal **						5.7			16			0.6	6.3
** WBS: 1.2.3.2.3.5.1.2	Slit Mechanical Assembly												
1	Flanges & flexure plate	ea	1	1000.00	eu	1.0	1	80.0	80	MS	37.73	3.0	4.0
2	Cf feedthrus for elctncs	ea	4	200.00	eu	0.8	0	0.0	0		0.00	0.0	0.8
3	Viewports & mirrors	ea	2	200.00	eu	0.4	2	8.0	16	MS	37.73	0.6	1.0
4	Brazing & fixtures	ea	1	100.00	eu	0.1	1	20.0	20	MU	35.92	0.7	0.8
5	Feedthrus - welding	ea	1	50.00	eu	0.1	1	8.0	8	MS	37.73	0.3	0.4
6	Blades fab/buy	ea	2	5000.00	eu	10.0	0	0.0	0		0.00	0.0	10.0
7	LCW hardware	ea	1	100.00	eu	0.1	1	8.0	8	MU	35.92	0.3	0.4
8	Micrometer mech	ea	1	1000.00	eu	1.0	1	20.0	20	MS	37.73	0.8	1.8

Technical Components Cost Estimate

ITM NBR	ITM DESCRIPTION	UNIT MEAS	NBR UNITS	UNIT COST	COST BASIS	TOTAL ISC K$	LBR UNTS	HRS/ UNIT	TOTAL HRS	CRAFT CODE	CRAFT RATE	TOTAL LABOR K$	ISC + LABOR K$
9	Outside vac mntng hrdware	lot	1	500.00	eu6	0.5	1	20.0	20	MS	37.73	0.8	1.3
10	Blade alignment fixtures	lot	1	200.00	eu	0.2	1	20.0	20	MS	37.73	0.8	1.0
** Subtotal **						14.1			192			7.2	21.3
** WBS: 1.2.3.2.3.5.1.3	Support Systems												
1	Slit assy mntng hardwre	ea	6	1000.00	eu	6.0	6	8.0	48	MS	37.73	1.8	7.8
2	Support post & hardware	ea	1	500.00	eu	0.5	1	40.0	40	MS	37.73	1.5	2.0
3	Struts & mntng hardwre	ea	6	500.00	eu	3.0	6	8.0	48	MS	37.73	1.8	4.8
4	Support post & hardware	ea	1	300.00	eu	0.3	1	20.0	20	MS	37.73	0.8	1.1
** Subtotal **						9.8			156			5.9	15.7
** WBS: 1.2.3.2.3.5.1.4	Spools												
1	Diagnostic spool piece	ea	1	2000.00	eu	2.0	0	0.0	0		0.00	0.0	2.0
2	Collmtng spool piece	ea	1	1250.00	A91	1.2	1	8.0	8	MU	35.92	0.3	1.5
3	Misc flanges & UHV hardwr	lot	1	500.00	eu	0.5	0	0.0	0		0.00	0.0	0.5
4	Lead shielding & mounting	ea	1	500.00	eu	0.5	1	40.0	40	MS	37.73	1.5	2.0
** Subtotal **						4.2			48			1.8	6.0
** WBS: 1.2.3.2.3.5.1.5	Vacuum System												
1	Ion pump 120 l/s	ea	1	4000.00	A91	4.0	1	4.0	4	MU	35.92	0.1	4.1
2	Ion pump controller	ea	1	1600.00	A91	1.6	1	4.0	4	EI	33.00	0.1	1.7
3	Ion pump cable, bakeable	ea	1	250.00	cp	0.2	0	0.0	0		0.00	0.0	0.2
4	IEEE-48 cable, 3m cntrllr	ea	1	150.00	cp	0.1	0	0.0	0		0.00	0.0	0.1
5	Roughing valve	ea	2	650.00	A91	1.3	0	0.0	0		0.00	0.0	1.3
6	Ion gauge & controls	ea	1	3500.00	A91	3.5	1	4.0	4	MU	35.92	0.1	3.6
7	Ion gauge cable, bakeable	ea	1	250.00	cp	0.2	1	4.0	4	EI	33.00	0.1	0.4
8	Junction box, IG cable	ea	1	200.00	eu	0.2	1	4.0	4	EI	33.00	0.1	0.3
9	Interlock cable	ea	1	100.00	eu	0.1	0	0.0	0		0.00	0.0	0.1
** Subtotal **						11.3			20			0.7	12.0
** WBS: 1.2.3.2.3.5.1.6	Isolation Valve												
1	Valve & controller proc	ea	1	10000.00	vq	10.0	0	0.0	0		0.00	0.0	10.0
2	Prelim assemble & test	ea	1	50.00	eu	0.1	1	8.0	8	MU	35.92	0.3	0.3
3	Inspect,clean,etc	ea	1	50.00	eu	0.1	1	4.0	4	MU	35.92	0.1	0.2
4	Cables & connectors	ea	1	200.00	eu	0.2	1	2.0	2	EI	33.00	0.1	0.3
5	Blank flanges & hardware	lot	2	200.00	eu	0.4	0	0.0	0		0.00	0.0	0.4
** Subtotal **						10.7			14			0.5	11.2
** WBS: 1.2.3.2.3.5.1.7	Assemble and Test												
1	Assemble & test	ea	1	500.00	eu	0.5	2	40.0	80	MU	35.92	2.9	3.4
2	Bakeout & UHV qualify	ea	1	500.00	eu	0.5	2	40.0	80	MU	35.92	2.9	3.4
3	Survey & calibrate		0	0.00		0.0	2	16.0	32	MU	35.92	1.1	1.1
4	Misc tools, fixtures,cart	lot	1	500.00	eu8	0.5	1	40.0	40	MS	37.73	1.5	2.0
** Subtotal **						1.5			232			8.4	9.9
** WBS: 1.2.3.2.3.5.1.8	Install and Align												
1	LCW hardware & cnnections	lot	1	300.00	eu8	0.3	1	16.0	16	MU	35.92	0.6	0.9
2	Transport & onsite setup	ea	1	200.00	eu	0.2	2	16.0	32	MU	35.92	1.1	1.3
3	Vac assmble & leak check	ea	1	50.00	eu8	0.1	2	20.0	40	MU	35.92	1.4	1.5
4	Installation alignment		0	0.00		0.0	2	32.0	64	MU	35.92	2.3	2.3
5	Mech install/test/debug	lot	1	500.00	eu	0.5	2	20.0	40	MU	35.92	1.4	1.9
6	Elec installation		0	0.00		0.0	1	20.0	20	IEL	62.85	1.3	1.3
** Subtotal **						1.1			212			8.2	9.2
** WBS: 1.2.3.2.3.5.2.1	Bellows												
1	Welded bellows assy	ea	2	2500.00	A91	5.0	2	4.0	8	MS	37.73	0.3	5.3
2	Blank flanges & gaskets	lot	2	300.00	cp	0.6	0	0.0	0		0.00	0.0	0.6
3	Inspect,clean,bakeout	ea	2	50.00	eu	0.1	2	4.0	8	MU	35.92	0.3	0.4

Technical Components Cost Estimate

ITM NBR	ITM DESCRIPTION	UNIT MEAS	NBR UNITS	UNIT COST COST	BASIS	TOTAL ISC K$	LBR UNTS	HRS/ UNIT	TOTAL HRS	CRAFT CODE	CRAFT RATE	TOTAL LABOR K$	ISC + LABOR K$
** Subtotal **						5.7			16			0.6	6.3
** WBS: 1.2.3.2.3.5.2.2	Gratings												
1	Brazed substrate parts	ea	3	3500.00	A91	10.5	0	0.0	0		0.00	0.0	10.5
2	Substrate brazing,welding	ea	3	200.00	A91	0.6	3	20.0	60	MU	35.92	2.2	2.8
3	Misc leak & flow tests	ea	3	100.00	A91	0.3	3	8.0	24	MU	35.92	0.9	1.2
4	Polishing	ea	3	20000.00	A91	60.0	0	0.0	0		0.00	0.0	60.0
5	Ruling	ea	3	15000.00	eu	45.0	0	0.0	0		0.00	0.0	45.0
6	Optical coatings	ea	3	1000.00	eu	3.0	0	0.0	0		0.00	0.0	3.0
7	Shipping & handling	ea	3	200.00	eu	0.6	4	4.0	16	MU	35.92	0.6	1.2
** Subtotal **						120.0			100			3.6	123.6
** WBS: 1.2.3.2.3.5.2.3	Grating Mechanical Assembly												
1	Invac mounting hardware	ea	1	20000.00	eu	20.0	1	800.0	800	MS	37.73	30.2	50.2
2	Scan drive mechanism	ea	1	5000.00	eu	5.0	1	200.0	200	MS	37.73	7.5	12.5
3	Slide	ea	1	20000.00	A87	20.0	0	0.0	0		0.00	0.0	20.0
4	Grating intrchnge actuatr	ea	1	2000.00	A87	2.0	1	80.0	80	MS	37.73	3.0	5.0
5	Alignmnt manipulator	ea	1	2000.00	A87	2.0	1	80.0	80	MS	37.73	3.0	5.0
** Subtotal **						49.0			1160			43.8	92.8
** WBS: 1.2.3.2.3.5.2.4	Mask & VBDA												
1	Blade mechanism	ea	2	1000.00	eu	2.0	2	80.0	160	MS	37.73	6.0	8.0
2	Vacuum housing	ea	1	2000.00	eu	2.0	0	0.0	0		0.00	0.0	2.0
3	Manual actuator/micometer	ea	2	1500.00	eu	3.0	2	20.0	40	MS	37.73	1.5	4.5
4	LCW hardware	ea	1	500.00	cp	0.5	1	20.0	20	MS	37.73	0.8	1.3
5	Misc parts & tools	lot	1	1000.00	eu	1.0	1	40.0	40	MS	37.73	1.5	2.5
** Subtotal **						8.5			260			9.8	18.3
** WBS: 1.2.3.2.3.5.2.5	Electrical & Controls												
1	Scan drive electronics	ea	1	40000.00	A87	40.0	0	0.0	0		0.00	0.0	40.0
2	Interferometer positionng	ea	1	25000.00	A87	25.0	0	0.0	0		0.00	0.0	25.0
3	Glow dschrge optcl cleang	ea	1	10000.00	eu	10.0	1	16.0	16	EI	33.00	0.5	10.5
** Subtotal **						75.0			16			0.5	75.5
** WBS: 1.2.3.2.3.5.2.6	Vacuum System												
1	Ion pump 400 l/s	ea	1	7500.00	A91	7.5	1	4.0	4	MU	35.92	0.1	7.6
2	Ion pump heater	ea	1	1000.00	A91	1.0	1	4.0	4	EI	33.00	0.1	1.1
3	Ion pump controller	ea	1	2500.00	A91	2.5	1	4.0	4	EI	33.00	0.1	2.6
4	Ion pump cable,bakeable	ea	1	250.00	A91	0.2	0	0.0	0		0.00	0.0	0.2
5	IEEE-48 cable, 3 meter	ea	1	150.00	cp	0.1	0	0.0	0		0.00	0.0	0.1
6	Roughing valve	ea	2	650.00	A91	1.3	0	0.0	0		0.00	0.0	1.3
7	Ion gauge & controls	ea	1	3500.00	A91	3.5	1	4.0	4	MU	35.92	0.1	3.6
8	Ion gauge cable,bakeable	ea	1	250.00	cp	0.2	1	4.0	4	EI	33.00	0.1	0.4
9	Junction box, IG cable	ea	1	200.00	eu	0.2	1	4.0	4	EI	33.00	0.1	0.3
10	Interlock cable	ea	1	100.00	eu	0.1	0	0.0	0		0.00	0.0	0.1
11	TSP pump spool piece	ea	1	3000.00	A91	3.0	0	0.0	0		0.00	0.0	3.0
12	TSP filaments/controller	ea	1	3500.00	eu	3.5	1	8.0	8	EI	33.00	0.3	3.8
13	Flanges & UHV hardware	lot	1	500.00	eu	0.5	0	0.0	0		0.00	0.0	0.5
14	Support stand misc hardwr	ea	1	500.00	eu	0.5	1	20.0	20	MS	37.73	0.8	1.3
15	Pump welded bellws assy	ea	1	2500.00	A91	2.5	0	0.0	0		0.00	0.0	2.5
16	Bellows inspect,clean,bak	ea	1	50.00	eu	0.1	1	4.0	4	MU	35.92	0.1	0.2
17	Misc extrusions,mounting	lot	1	1000.00	eu	1.0	1	20.0	20	MS	37.73	0.8	1.8
** Subtotal **						27.8			76			2.7	30.5
** WBS: 1.2.3.2.3.5.2.7	Support Systems												
1	Grating chamber	ea	1	40000.00	A88	40.0	1	800.0	800	MS	37.73	30.2	70.2
2	Struts & mounting hardwre	ea	6	1000.00	eu	6.0	6	8.0	48	MS	37.73	1.8	7.8
3	Support stand & hardware	ea	1	2000.00	eu	2.0	1	80.0	80	MS	37.73	3.0	5.0
4	Misc blank-off flanges	lot	8	500.00	cp	4.0	0	0.0	0		0.00	0.0	4.0
5	Misc UHV tools,parts,etc	lot	1	2500.00	eu	2.5	1	40.0	40	MS	37.73	1.5	4.0

Technical Components Cost Estimate

ITM NBR	ITM DESCRIPTION	UNIT MEAS	NBR UNITS	UNIT COST	COST BASIS	TOTAL ISC K$	LBR UNTS	HRS/ UNIT	TOTAL HRS	CRAFT CODE	CRAFT RATE	TOTAL LABOR K$	ISC LABOR K$
** Subtotal **						54.5			968			36.5	91.0
** WBS: 1.2.3.2.3.5.2.8	Assemble & Test												
1	Assemble grating BDA	ea	1	500.00	eu	0.5	2	80.0	160	MS	37.73	6.0	6.5
2	Assemble grating mounting	ea	1	500.00	A88	0.5	2	80.0	160	MS	37.73	6.0	6.5
3	Assemble drive mechanism	ea	1	500.00	A88	0.5	2	80.0	160	MS	37.73	6.0	6.5
4	Assemble grating chamber	ea	1	500.00	A88	0.5	2	80.0	160	MS	37.73	6.0	6.5
5	Bakeout & UHV qualify	ea	1	500.00	eu	0.5	2	80.0	160	MU	35.92	5.7	6.2
6	Survey/calibration		0	0.00		0.0	2	16.0	32	MU	35.92	1.1	1.1
7	Misc tools,fixtures,cart	lot	1	1000.00	eu	1.0	1	40.0	40	MS	37.73	1.5	2.5
** Subtotal **						3.5			872			32.6	36.1
** WBS: 1.2.3.2.3.5.2.9	Install & Align												
1	LCW hardware & connctions	ea	1	300.00	eu	0.3	1	16.0	16	MU	35.92	0.6	0.9
2	Transport & onsite setup	ea	1	500.00	eu	0.5	2	40.0	80	MU	35.92	2.9	3.4
3	Vac assemble & leakcheck	ea	1	50.00	eu	0.1	2	40.0	80	MU	35.92	2.9	2.9
4	Installation alignment		0	0.00		0.0	2	40.0	80	MU	35.92	2.9	2.9
5	Mech install,test,debug	ea	1	500.00	eu	0.5	2	40.0	80	MU	35.92	2.9	3.4
6	Electrical installation		0	0.00		0.0	1	40.0	40	IEL	62.85	2.5	2.5
** Subtotal **						1.4			376			14.6	15.9
** WBS: 1.2.3.2.3.5.3.1	Bellows												
1	Welded bellows assy	ea	2	8000.00	A86	16.0	2	4.0	8	MS	37.73	0.3	16.3
2	Inspection,cleaning,bake	ea	2	50.00	eu	0.1	2	4.0	8	MU	35.92	0.3	0.4
3	Anti-sag supports	ea	2	1000.00	eu	2.0	2	60.0	120	MS	37.73	4.5	6.5
** Subtotal **						18.1			136			5.1	23.2
** WBS: 1.2.3.2.3.5.3.2	Isolation Valves												
1	Valve & controller proc.	ea	2	10000.00	vq	20.0	0	0.0	0		0.00	0.0	20.0
2	Prelim assemble & test	lot	2	50.00	eu	0.1	2	8.0	16	MU	35.92	0.6	0.7
3	Inspection, clean,bake	lot	2	50.00	eu	0.1	2	4.0	8	MU	35.92	0.3	0.4
4	Cables & connectors	lot	2	200.00	eu	0.4	2	2.0	4	EI	33.00	0.1	0.5
5	Blank flanges & hardware	lot	4	200.00	eu	0.8	0	0.0	0		0.00	0.0	0.8
** Subtotal **						21.4			28			1.0	22.4
** WBS: 1.2.3.2.3.5.3.3	Vacuum System												
1	Ion pump 60 l/s	ea	1	2700.00	A91	2.7	1	4.0	4	MU	35.92	0.1	2.8
2	Ion pump controller	ea	1	1600.00	A91	1.6	1	4.0	4	EI	33.00	0.1	1.7
3	Ion pump cable,bakeable	ea	1	250.00	A91	0.2	0	0.0	0		0.00	0.0	0.2
4	IEEE-48 cable, 3 m	ea	1	150.00	cp	0.1	0	0.0	0		0.00	0.0	0.1
5	Roughing valve	ea	2	650.00	A91	1.3	0	0.0	0		0.00	0.0	1.3
6	Ion gauge & controls	ea	1	3500.00	A91	3.5	1	4.0	4	MU	35.92	0.1	3.6
7	Ion gauge cable, bakeable	ea	1	250.00	cp	0.2	1	4.0	4	EI	33.00	0.1	0.4
8	Junction box, IG cable	ea	1	200.00	eu	0.2	1	4.0	4	EI	33.00	0.1	0.3
9	Interlock cable	ea	1	100.00	eu	0.1	0	0.0	0		0.00	0.0	0.1
10	Spool pieces	ea	3	2000.00	eu	6.0	0	0.0	0		0.00	0.0	6.0
** Subtotal **						16.0			20			0.7	16.7
** WBS: 1.2.3.2.3.5.3.4	Slit Mechanical Assembly												
1	Flanges & flexure plate	ea	1	1000.00	eu	1.0	1	80.0	80	MS	37.73	3.0	4.0
2	CF feed-thrus for elctncs	ea	4	200.00	eu	0.8	0	0.0	0		0.00	0.0	0.8
3	Viewports & mirrors	ea	2	200.00	eu	0.4	2	8.0	16	MS	37.73	0.6	1.0
4	Brazing & fixtures	ea	1	100.00	eu	0.1	1	20.0	20	MU	35.92	0.7	0.8
5	Feedthrus welding	ea	1	50.00	eu	0.1	1	8.0	8	MS	37.73	0.3	0.4
6	Blades fab/buy	ea	2	200.00	eu	0.4	2	20.0	40	MS	37.73	1.5	1.9
8	LCW hardware	ea	1	100.00	eu	0.1	1	8.0	8	MU	35.92	0.3	0.4
9	Micrometer mechanism	ea	1	1000.00	eu	1.0	1	20.0	20	MS	37.73	0.8	1.8
10	Outside vac mnting hardwr	ea	1	500.00	eu	0.5	1	20.0	20	MS	37.73	0.8	1.3
11	Blade alignment fixtures	lot	1	200.00	eu	0.2	1	20.0	20	MS	37.73	0.8	1.0
12	Exit slit motion system	ea	1	60000.00	A87	60.0	0	0.0	0		0.00	0.0	60.0

Technical Components Cost Estimate

ITM NBR	ITM DESCRIPTION	UNIT MEAS	NBR UNITS	UNIT COST COST BASIS	TOTAL ISC K$	LBR UNTS	HRS/ UNIT	TOTAL HRS	CRAFT CODE	CRAFT RATE	TOTAL LABOR K$	ISC + LABOR K$
** Subtotal **					64.5			232			8.7	73.3
** WBS: 1.2.3.2.3.5.3.5	Support Systems											
1	Slit assy mounting hardwr	ea	6	1000.00 eu	6.0	6	8.0	48	MS	37.73	1.8	7.8
2	Support post & hardware	ea	1	1000.00 eu	1.0	1	40.0	40	MS	37.73	1.5	2.5
** Subtotal **					7.0			88			3.3	10.3
** WBS: 1.2.3.2.3.5.3.6	Assemble & Test											
1	Assemble & test	ea	1	500.00 eu	0.5	1	120.0	120	MU	35.92	4.3	4.8
2	Bakeout & UHV qualify	ea	1	500.00 eu	0.5	1	120.0	120	MU	35.92	4.3	4.8
3	Survey/calibration		0	0.00	0.0	2	16.0	32	MU	35.92	1.1	1.1
4	Misc tools,fixtures,cart	lot	1	500.00 eu	0.5	1	40.0	40	MS	37.73	1.5	2.0
** Subtotal **					1.5			312			11.3	12.8
** WBS: 1.2.3.2.3.5.3.7	Install & Align											
1	Transport & onsite setup	lot	1	200.00 eu	0.2	2	16.0	32	MU	35.92	1.1	1.3
2	Vac assmble & leakcheck	ea	1	50.00 eu	0.1	2	20.0	40	MU	35.92	1.4	1.5
3	Installation alignment		0	0.00	0.0	2	32.0	64	MU	35.92	2.3	2.3
4	Mech install,test,debug	ea	1	500.00 eu	0.5	2	20.0	40	MU	35.92	1.4	1.9
5	Electrical installation		0	0.00	0.0	1	20.0	20	IEL	62.85	1.3	1.3
** Subtotal **					0.8			196			7.6	8.3
** WBS: 1.2.3.2.3.8.1	Fab/Buy Mech Parts & Subassy's											
1	Linear device mech	ea	1	4000.00 cp	4.0	0	0.0	0		0.00	0.0	4.0
2	Mods for water cooling	ea	1	200.00 eu	0.2	1	20.0	20	MS	37.73	0.8	1.0
3	In-vac part fab.	ea	1	1000.00 eu	1.0	1	80.0	80	MS	37.73	3.0	4.0
4	Brazing & welding assy	ea	1	200.00 A91	0.2	1	20.0	20	MS	37.73	0.8	1.0
5	Detector,feedthru,phosphr	ea	1	500.00 eu	0.5	1	40.0	40	MS	37.73	1.5	2.0
** Subtotal **					5.9			160			6.0	11.9
** WBS: 1.2.3.2.3.8.3	Fab/Buy Vacuum Chamber & Supports											
1	Spool piece	ea	2	2000.00 eu	4.0	0	0.0	0		0.00	0.0	4.0
2	Struts & Mounting hardwar	ea	6	500.00 eu	3.0	6	8.0	48	MS	37.73	1.8	4.8
3	Support post & hardware	ea	1	300.00 eu	0.3	1	20.0	20	MS	37.73	0.8	1.1
4	Misc flanges & feedthrus	lot	1	2000.00 eu	2.0	1	20.0	20	MS	37.73	0.8	2.8
** Subtotal **					9.3			88			3.3	12.6
** WBS: 1.2.3.2.3.8.4	Vacuum Pumping, Gauges, Controllers, P.S.											
1	Ion pump, 60l/s	ea	1	2700.00 A91	2.7	1	4.0	4	MU	35.92	0.1	2.8
2	Ion pump controller	ea	1	1600.00 A91	1.6	1	4.0	4	EI	33.00	0.1	1.7
3	Ion pump cable, bakeable	ea	1	250.00 A91	0.2	0	0.0	0		0.00	0.0	0.2
4	IEEE-488 cable, 3m	ea	1	150.00 cp	0.1	0	0.0	0		0.00	0.0	0.1
5	Roughing valve	ea	2	650.00 A91	1.3	0	0.0	0		0.00	0.0	1.3
6	Ion gauge & contrls	ea	1	3500.00 A91	3.5	1	4.0	4	MU	35.92	0.1	3.6
7	Ion gauge cable, bakeable	ea	1	250.00 cp	0.2	1	4.0	4	EI	33.00	0.1	0.4
8	Junction box, IG cable	ea	1	200.00 eu	0.2	1	4.0	4	EI	33.00	0.1	0.3
9	Interlock cable	ea	1	100.00 eu	0.1	0	0.0	0		0.00	0.0	0.1
** Subtotal **					10.0			20			0.7	10.7
** WBS: 1.2.3.2.3.8.5	Assemble, Bakeout, Test											
1	Assemble & test	ea	2	500.00 eu	1.0	2	20.0	40	MS	37.73	1.5	2.5
2	Bakeout & UHV qualify	ea	2	500.00 eu	1.0	2	40.0	80	MS	37.73	3.0	4.0
3	Survey/calibration		0	0.00	0.0	2	16.0	32	MS	37.73	1.2	1.2
** Subtotal **					2.0			152			5.7	7.7
** WBS: 1.2.3.2.3.8.6	Installation											
1	Transport & on-site setup		0	0.00	0.0	2	4.0	8	MU	35.92	0.3	0.3
2	Vac assemble & leak check	ea	1	100.00 eu	0.1	2	20.0	40	MU	35.92	1.4	1.5

Technical Components Cost Estimate

ITM NBR	ITM DESCRIPTION	UNIT MEAS	NBR UNITS	UNIT COST COST	BASIS	TOTAL ISC K$	LBR UNTS	HRS/ UNIT	TOTAL HRS	CRAFT CODE	CRAFT RATE	TOTAL LABOR K$	ISC LABOR K$
3	Mech install/test/debug	ea	1	100.00	eu	0.1	2	20.0	40	MU	35.92	1.4	1.5
** Subtotal **						0.2			88			3.2	3.4
** WBS: 1.2.3.2.3.9.1	Fab/Buy Mech Parts & Subassy's												
1	Misc machine shop effort	lot	1	1000.00	eu	1.0	1	40.0	40	MS	37.73	1.5	2.5
2	Misc mech tech & tools	lot	1	1000.00	eu	1.0	1	40.0	40	MU	35.92	1.4	2.4
** Subtotal **						2.0			80			2.9	4.9
** WBS: 1.2.3.2.3.9.2	Fab/Buy Electrical and Controls												
1	Cables,valve actuation &	lot	3	100.00	eu	0.3	3	4.0	12	EI	33.00	0.4	0.7
2	X-connect blocks & frame	ea	1	500.00	eu	0.5	1	24.0	24	EI	33.00	0.8	1.3
3	Relays blocks & frame	ea	1	580.00	cp	0.6	1	24.0	24	EI	33.00	0.8	1.4
4	48 channel opto-isolators	ea	1	700.00	cp	0.7	1	24.0	24	EI	33.00	0.8	1.5
5	Cable trays, conduit, etc	lot	1	2000.00	eu	2.0	1	120.0	120	IEL	62.85	7.5	9.5
6	Double elec. rack	ea	1	1300.00	cp	1.3	1	16.0	16	EI	33.00	0.5	1.8
7	BA panel 3 ph 30A	ea	1	50.00	eu	0.1	1	16.0	16	EI	33.00	0.5	0.6
8	Breaker panel	ea	2	200.00	eu	0.4	2	2.0	4	EI	33.00	0.1	0.5
9	Plug strip	ea	2	20.00	eu	0.0	2	1.0	2	EI	33.00	0.1	0.1
10	Rack fans	ea	2	50.00	eu	0.1	2	2.0	4	EI	33.00	0.1	0.2
11	Misc. hardware	lot	1	1000.00	eu	1.0	1	40.0	40	EI	33.00	1.3	2.3
12	Programmabl logic cntrllr	ea	1	8000.00	eu	8.0	1	40.0	40	CP	59.40	2.4	10.4
13	PLC Cabling	ea	1	500.00	eu	0.5	1	20.0	20	EI	33.00	0.7	1.2
14	Operator Console	ea	1	8000.00	eu	8.0	0	0.0	0		0.00	0.0	8.0
15	Branch line device server		0	0.00		0.0	0	0.0	0		0.00	0.0	0.0
16	VME crate w/power spply	ea	1	3000.00	cp	3.0	1	0.0	0		0.00	0.0	3.0
17	VME processor	ea	1	3500.00	cp	3.5	0	40.0	0	CP	59.40	0.0	3.5
18	IEEE-48 module	ea	1	800.00	cp	0.8	0	0.0	0		0.00	0.0	0.8
19	Real time O/S	ea	1	500.00	cp	0.5	0	0.0	0		0.00	0.0	0.5
20	Network interface		0	0.00		0.0	0	0.0	0		0.00	0.0	0.0
21	Ethernet router	ea	1	2000.00	eu	2.0	1	20.0	20	EI	33.00	0.7	2.7
22	Ethernet distribution	ea	1	2000.00	eu	2.0	0	0.0	0		0.00	0.0	2.0
23	Cables, thicknet	ea	5	200.00	eu	1.0	0	0.0	0		0.00	0.0	1.0
24	Display/control station		0	0.00		0.0	0	0.0	0		0.00	0.0	0.0
25	Display station	ea	1	10000.00	eu	10.0	0	0.0	0		0.00	0.0	10.0
26	Display software	ea	1	3000.00	eu	3.0	1	40.0	40	CP	59.40	2.4	5.4
27	TV display controls		0	0.00		0.0	0	0.0	0		0.00	0.0	0.0
28	TV monitor	ea	1	500.00	eu	0.5	0	0.0	0		0.00	0.0	0.5
29	TV patch panel	ea	1	200.00	eu	0.2	1	20.0	20	EI	33.00	0.7	0.9
30	TV scanner	ea	1	1000.00	eu	1.0	0	0.0	0		0.00	0.0	1.0
31	TV camera	ea	6	500.00	eu	3.0	0	0.0	0		0.00	0.0	3.0
32	Cabling, patch	ea	6	20.00	eu	0.1	0	0.0	0		0.00	0.0	0.1
33	24VDC power distribution		0	0.00		0.0	0	0.0	0		0.00	0.0	0.0
34	24VDC power supply	ea	1	2000.00	eu	2.0	1	20.0	20	EI	33.00	0.7	2.7
35	24VDC distribution	ea	1	2000.00	eu	2.0	1	40.0	40	EI	33.00	1.3	3.3
** Subtotal **						58.1			486			21.7	79.8
** WBS: 1.2.3.2.3.9.3	Fab/Buy Vacuum Chamber & Supports												
1	Misc flanges,viewprts,etc	lot	1	3000.00	eu	3.0	0	0.0	0		0.00	0.0	3.0
2	Roughing valve	ea	4	650.00	cp	2.6	0	0.0	0		0.00	0.0	2.6
3	Misc. unistrut/hardware	lot	1	500.00	eu	0.5	1	40.0	40	MU	35.92	1.4	1.9
** Subtotal **						6.1			40			1.4	7.5
** WBS: 1.2.3.2.3.9.5	Assemble, Bakeout, Test												
1	Misc assemble & test	ea	1	1000.00	eu	1.0	2	80.0	160	MU	35.92	5.7	6.7
2	Misc bakeout/UHV qualify	lot	1	1000.00	eu	1.0	2	80.0	160	MU	35.92	5.7	6.7
3	Survey/calibration		0	0.00		0.0	3	32.0	96	MU	35.92	3.4	3.4
** Subtotal **						2.0			416			14.9	16.9
** WBS: 1.2.3.2.3.9.6	Installation												
1	Transport & on-site setup	lot	1	100.00	eu	0.1	2	40.0	80	MU	35.92	2.9	3.0
2	Vac assmble & leak checks	lot	1	500.00	eu	0.5	2	40.0	80	MU	35.92	2.9	3.4

Technical Components Cost Estimate

ITM NBR	ITM DESCRIPTION	UNIT MEAS	NBR UNITS	UNIT COST COST	BASIS	TOTAL ISC K$	LBR UNTS	HRS/ UNIT	TOTAL HRS	CRAFT CODE	CRAFT RATE	TOTAL LABOR K$	ISC + LABOR K$
4	Lead shielding installatn	lot	1	200.00	eu	0.2	1	40.0	40	MU	35.92	1.4	1.6
5	Installation alignment		0	0.00		0.0	3	32.0	96	MU	35.92	3.4	3.4
6	Pneumatic service	ea	1	1000.00	eu	1.0	1	40.0	40	MU	35.92	1.4	2.4
7	LCW service	lot	1	1000.00	eu	1.0	1	40.0	40	MU	35.92	1.4	2.4
8	Mech install/test/debug	lot	1	100.00	eu	0.1	2	40.0	80	MU	35.92	2.9	3.0
9	Elec installation		0	0.00		0.0	1	40.0	40	IEL	62.85	2.5	2.5
10			0	0.00		0.0	1	40.0	40	EI	33.00	1.3	1.3
** Subtotal **						2.9			536			20.2	23.1
** WBS: 1.2.3.2.3.10	Branch Line Safety Systems												
1	ILC & SBX	ea	2	1500.00	eu	3.0	0	0.0	0		0.00	0.0	3.0
2	Eurocard crate	ea	1	1000.00	eu	1.0	0	0.0	0		0.00	0.0	1.0
3	Key panel	ea	1	300.00	cp	0.3	0	0.0	0		0.00	0.0	0.3
4	Monitor lights panel	ea	6	250.00	cp	1.5	0	0.0	0		0.00	0.0	1.5
5	Push button panel	ea	1	250.00	eu	0.2	0	0.0	0		0.00	0.0	0.2
6	Breaker panel	ea	1	250.00	eu	0.2	0	0.0	0		0.00	0.0	0.2
7	Cables	lot	1	100.00	eu	0.1	0	0.0	0		0.00	0.0	0.1
8	Wiring assembly		0	0.00		0.0	1	80.0	80	EI	33.00	2.6	2.6
9	Misc hardware & locks	lot	1	1000.00	eu	1.0	0	0.0	0		0.00	0.0	1.0
10	Elec installation		0	0.00		0.0	1	40.0	40	IEL	62.85	2.5	2.5
** Subtotal **						7.4			120			5.2	12.6
** WBS: 1.2.3.2.3.11.1	Vertical Refocus Mirror												
1	Vertical Refocus Mirror	ea	1	20000.00	eu	20.0	0	0.0	0		0.00	0.0	20.0
2	Piezo-tranducer	ea	1	10000.00	eu	10.0	0	0.0	0		0.00	0.0	10.0
3	Mirror mount	ea	1	5000.00	eu	5.0	1	120.0	120	MS	37.73	4.5	9.5
4	Vacuum vessel	ea	1	10000.00	eu	10.0	0	0.0	0		0.00	0.0	10.0
5	Stand	ea	1	5000.00	eu	5.0	1	80.0	80	MS	37.73	3.0	8.0
6	Ion pump 220 l/s	ea	1	7000.00	eu	7.0	1	8.0	8	MU	35.92	0.3	7.3
7	Ion pump controller	ea	1	2500.00	eu	2.5	1	8.0	8	EI	33.00	0.3	2.8
8	Ion gauge	ea	1	700.00	eu	0.7	1	8.0	8	MU	35.92	0.3	1.0
9	Ion gauge controller	ea	1	2100.00	eu	2.1	1	8.0	8	EI	33.00	0.3	2.4
10	Horizontl deflectn mirror	ea	2	2000.00	eu	4.0	0	0.0	0		0.00	0.0	4.0
11	Mirror mount	ea	1	5000.00	eu	5.0	1	120.0	120	MS	37.73	4.5	9.5
12	Installation	lot	1	200.00	eu	0.2	1	24.0	24	MU	35.92	0.9	1.1
** Subtotal **						71.5			376			14.0	85.5
** WBS: 1.2.3.2.3.11.2	Diagnostic Systems												
1	Diagnostics	ea	1	2000.00	eu	2.0	1	80.0	80	EI	33.00	2.6	4.6
2	Vacuum vessel	ea	1	2000.00	eu	2.0	0	0.0	0		0.00	0.0	2.0
3	Stand	ea	1	2000.00	eu	2.0	1	80.0	80	MS	37.73	3.0	5.0
4	Ion pump 120 l/s	ea	1	4500.00	eu	4.5	1	8.0	8	MU	35.92	0.3	4.8
5	Ion pump controller	ea	1	2500.00	eu	2.5	1	8.0	8	EI	33.00	0.3	2.8
6	Ion gauge	ea	1	700.00	eu	0.7	1	8.0	8	MU	35.92	0.3	1.0
7	Installation	lot	1	200.00	eu	0.2	1	24.0	24	MU	35.92	0.9	1.1
** Subtotal **						13.9			208			7.4	21.3
** WBS: 1.2.3.2.3.11.3	Beam Transport												
1	Bellows	ea	4	1000.00	eu	4.0	4	16.0	64	MU	35.92	2.3	6.3
2	Beam Pipe	ea	4	500.00	eu	2.0	4	8.0	32	MU	35.92	1.1	3.1
3	Isolation valves	ea	3	5000.00	eu	15.0	3	16.0	48	MU	35.92	1.7	16.7
4	Installation	lot	1	200.00	eu	0.2	1	24.0	24	MU	35.92	0.9	1.1
** Subtotal **						21.2			168			6.0	27.2
** WBS: 1.2.4.1.1	W16 Wiggler EDI												
1	Engineering		0	0.00		0.0	1	2800.0	2800	ME	59.40	166.3	166.3
2	Design		0	0.00		0.0	1	3000.0	3000	MD	42.25	126.8	126.8
3	S&E	lot	1	24650.00	eu	24.6	0	0.0	0		0.00	0.0	24.6
** Subtotal **						24.6			5800			293.1	317.7

Technical Components Cost Estimate

ITM NBR	ITM DESCRIPTION	UNIT MEAS	NBR UNITS	UNIT COST	COST BASIS	TOTAL ISC K$	LBR UNTS	HRS/ UNIT	TOTAL HRS	CRAFT CODE	CRAFT RATE	TOTAL LABOR K$	ISC LABOR K$
** WBS: 1.2.4.1.2	W16 Front End EDI												
1	Design		0	0.00		0.0	1	2075.0	2075	MD	42.25	87.7	87.7
2	S&E	lot	1	5730.00	eu	5.7	0	0.0	0		0.00	0.0	5.7
** Subtotal **						5.7			2075			87.7	93.4
** WBS: 1.2.4.1.3	W16 Branchline EDI												
1	Engineering		0	0.00		0.0	1	4810.0	4810	ME	59.40	285.7	285.7
2	Design		0	0.00		0.0	1	11200.0	11200	MD	42.25	473.2	473.2
3	S&E	lot	1	29500.00	eu	29.5	0	0.0	0		0.00	0.0	29.5
** Subtotal **						29.5			16010			758.9	788.4
** WBS: 1.2.4.2.1.1.1	Magnetic Material												
1	NDFE Blocks	ea	940	209.50	A90	196.9	0	0.0	0		0.00	0.0	196.9
2	Gauges/Holders	lot	1	100.00	eu	0.1	1	160.0	160	MU	35.92	5.7	5.8
3	Measurement Prep		0	0.00		0.0	1	20.0	20	EM	33.00	0.7	0.7
4			0	0.00		0.0	1	20.0	20	EE	59.40	1.2	1.2
5	Measurements	LOT	1	105.00	EU	0.1	0	0.0	0		0.00	0.0	0.1
6	HC Meas & Mech Inspectn		0	0.00		0.0	940	0.1	141	EM	33.00	4.7	4.7
7			0	0.00		0.0	1	60.0	60	EE	59.40	3.6	3.6
** Subtotal **						197.1			401			15.8	212.9
** WBS: 1.2.4.2.1.1.2	Model-Pole & Pole Assembly (not req'd)												
1	NdFe Blocks		0	0.00		0.0	8	4.0	32	MS	37.73	1.2	1.2
2	Test Fixture & Assembly	lot	1	105.00	eu	0.1	1	240.0	240	MU	35.92	8.6	8.7
3	Model Measurements		0	0.00		0.0	1	8.0	8	ME	59.40	0.5	0.5
** Subtotal **						0.1			280			10.3	10.4
** WBS: 1.2.4.2.1.1.3	Pole Assemblies												
1	Vanadium Permendur	ea	80	127.70	A90	10.2	0	0.0	0		0.00	0.0	10.2
2	Keepers	ea	80	300.00	A90	24.0	0	0.0	0		0.00	0.0	24.0
3	Keeper Inspection		0	0.00		0.0	80	0.8	64	MM	38.60	2.5	2.5
4	Containers	ea	80	10.00	eu	0.8	0	0.0	0		0.00	0.0	0.8
5	Assy Fixtures	ea	4	1800.00	eu	7.2	4	8.0	32	MM	38.60	1.2	8.4
6	Assembly	ea	80	10.50	A82	0.8	80	12.0	960	MM	38.60	37.1	37.9
7	Pole Assembly Mounts	ea	6	1914.00	A91	11.5	6	12.0	72	MM	38.60	2.8	14.3
** Subtotal **						54.5			1128			43.5	98.1
** WBS: 1.2.4.2.1.1.4	End Pole Assemblies												
1	End Pole Keepers	LOT	1	12157.00	A91	12.2	0	0.0	0		0.00	0.0	12.2
2	NdFe Block Cutting		0	0.00		0.0	24	4.0	96	MS	37.73	3.6	3.6
3	Assembly - Keepers		0	0.00		0.0	8	48.0	384	MA	38.60	14.8	14.8
4	Rotator		0	0.00		0.0	8	40.0	320	MM	38.60	12.4	12.4
5	Rotator Block Cutting		0	0.00		0.0	24	4.0	96	MS	37.73	3.6	3.6
6	Assemble - Rotator		0	0.00		0.0	8	16.0	128	MA	38.60	4.9	4.9
7	Rotator Linkage	ea	8	105.00	EU	0.8	8	8.0	64	MM	38.60	2.5	3.3
8	Manual Rotatr Drv	ea	8	525.00	CP	4.2	8	16.0	128	MM	38.60	4.9	9.1
9			0	0.00		0.0	8	12.0	96	MA	38.60	3.7	3.7
10	End pole mounts/levelers	lot	1	7595.00	A91	7.6	4	8.0	32	MM	38.60	1.2	8.8
** Subtotal **						24.8			1344			51.7	76.5
** WBS: 1.2.4.2.1.1.5	Backing Beams												
1	Backing Beams (2) Fab	lot	1	23600.00	A91	23.6	0	0.0	0		0.00	0.0	23.6
2	Machine	ea	1	19700.00	eu	19.7	0	0.0	0		0.00	0.0	19.7
3	Keys	lot	1	3000.00	EU	3.0	0	0.0	0		0.00	0.0	3.0
4	Adjusters	lot	1	9257.00	A91	9.3	1	40.0	40	MM	38.60	1.5	10.8
5	Pole Shields	lot	6	400.00	eu	2.4	0	0.0	0		0.00	0.0	2.4
6	Rigging hardware	lot	1	500.00	EU	0.5	0	0.0	0		0.00	0.0	0.5
7	Magnetic Shields	lot	1	200.00	eu	0.2	1	64.0	64	MA	38.60	2.5	2.7
8	Misc.	lot	1	1000.00	eu	1.0	1	80.0	80	MA	38.60	3.1	4.1

Technical Components Cost Estimate

ITM NBR	ITM DESCRIPTION	UNIT MEAS	NBR UNITS	UNIT COST COST BASIS	TOTAL ISC K$	LBR UNTS	HRS/ UNIT	TOTAL HRS	CRAFT CODE	CRAFT RATE	TOTAL LABOR K$	ISC + LABOR K$
** Subtotal **					59.7			184			7.1	66.8
** WBS: 1.2.4.2.1.1.6	Magnet Structure Assembly											
1	Keeper Installation Tool		0	0.00	0.0	1	21.0	21	MM	38.60	0.8	0.8
2	Keeper Pole Mount Assembl	ea	6	105.00 eu	0.6	6	60.0	360	MA	38.60	13.9	14.5
3	End Pole Assembly		0	0.00	0.0	4	60.0	240	MM	38.60	9.3	9.3
4	Pole Mount/Bckg Bm Assy	ea	6	105.00 eu	0.6	6	32.0	192	MA	38.60	7.4	8.0
5	Fiducializing	lot	1	105.00 EU	0.1	1	80.0	80	MA	38.60	3.1	3.2
6	Miscellaneous	lot	1	1000.00 eu	1.0	1	80.0	80	MM	38.60	3.1	4.1
** Subtotal **					2.4			973			37.6	39.9
** WBS: 1.2.4.2.1.1.7	Magnetic Measurements: Mechanical											
1	Assembly Section Setup		0	0.00	0.0	10	4.0	40	MA	38.60	1.5	1.5
2	ID Setup	lot	1	315.00 eu	0.3	1	160.0	160	MA	38.60	6.2	6.5
** Subtotal **					0.3			200			7.7	8.0
** WBS: 1.2.4.2.1.1.8	Magnetic Measurements: Electrical											
1	Setup Assembly Sections		0	0.00	0.0	1	16.0	16	EE	59.40	1.0	1.0
2			0	0.00	0.0	10	4.0	40	ES	33.00	1.3	1.3
3	Data Acquire: Assy Sectns		0	0.00	0.0	10	3.0	30	EE	59.40	1.8	1.8
4			0	0.00	0.0	10	4.0	40	ES	33.00	1.3	1.3
5	Data Analysis:Assy Sectns		0	0.00	0.0	1	80.0	80	EE	59.40	4.8	4.8
6	Code Software Coil Paramt		0	0.00	0.0	1	8.0	8	CP	59.40	0.5	0.5
7			0	0.00	0.0	1	8.0	8	EE	59.40	0.5	0.5
8	ID Setup: Electronic		0	0.00	0.0	1	16.0	16	EE	59.40	1.0	1.0
9			0	0.00	0.0	1	40.0	40	ES	33.00	1.3	1.3
10	ID Setup: Electrical		0	0.00	0.0	1	40.0	40	ES	33.00	1.3	1.3
11	ID: Data Acquisition		0	0.00	0.0	1	40.0	40	EE	59.40	2.4	2.4
12			0	0.00	0.0	1	240.0	240	ES	33.00	7.9	7.9
13	ID: Data Analysis		0	0.00	0.0	1	40.0	40	EE	59.40	2.4	2.4
14	Data Preparation		0	0.00	0.0	1	80.0	80	ES	33.00	2.6	2.6
15	Q/C Verification		0	0.00	0.0	1	20.0	20	EE	59.40	1.2	1.2
16			0	0.00	0.0	1	20.0	20	ES	33.00	0.7	0.7
17	Shutdown/Storage		0	0.00	0.0	1	20.0	20	EE	59.40	1.2	1.2
18			0	0.00	0.0	1	40.0	40	ES	33.00	1.3	1.3
** Subtotal **					0.0			818			34.3	34.3
** WBS: 1.2.4.2.1.2.1	Support System Fabrication											
1	Support System Assembly	ea	1	55200.00 EU	55.2	1	20.0	20	MA	38.60	0.8	56.0
2	Associated Parts	lot	1	1000.00 EU	1.0	1	80.0	80	MM	38.60	3.1	4.1
3	Miscellaneous	lot	1	1900.00 EU	1.9	1	210.0	210	MM	38.60	8.1	10.0
4	Assembly	lot	1	1800.00 EU	1.8	1	835.0	835	MA	38.60	32.2	34.0
** Subtotal **					59.9			1145			44.2	104.1
** WBS: 1.2.4.2.1.2.2	Drive System Fabrication											
1	Roller Screw Assembly	ea	1	53200.00 A91	53.2	1	32.0	32	MM	38.60	1.2	54.4
2	Spring System	ea	1	1000.00 eu	1.0	1	130.0	130	MM	38.60	5.0	6.0
3	Bearing System	lot	1	900.00 EU	0.9	1	105.0	105	MM	38.60	4.1	5.0
4	Sprocket/Chain System	lot	1	700.00 eu	0.7	1	50.0	50	MM	38.60	1.9	2.6
5	Gear Box & Mtg.	ea	1	1700.00 EU	1.7	1	20.0	20	MM	38.60	0.8	2.5
6	Encoder System	lot	1	500.00 eu	0.5	1	50.0	50	MM	38.60	1.9	2.4
7	Motor Mounting Bracket	ea	1	400.00 eu	0.4	1	40.0	40	MM	38.60	1.5	1.9
8	Fan System	lot	1	200.00 eu	0.2	1	40.0	40	MM	38.60	1.5	1.7
9	Miscellaneous	lot	1	1200.00 EU	1.2	1	235.0	235	MM	38.60	9.1	10.3
10	Assembly	lot	1	900.00 EU	0.9	1	365.0	365	MA	38.60	14.1	15.0
11	Roller Screw Kinematc Mnt	ea	8	1400.00 eu	11.2	1	170.0	170	MM	38.60	6.6	17.8
** Subtotal **					71.9			1237			47.7	119.6
* WBS: 1.2.4.2.1.2.3	Local Temperature Control Fabrication											
1	Frame & Curtain	lot	1	3000.00 EU	3.0	1	200.0	200	MA	38.60	7.7	10.7

Technical Components Cost Estimate

ITM NBR	ITM DESCRIPTION	UNIT MEAS	NBR UNITS	UNIT COST	COST BASIS	TOTAL ISC K$	LBR UNTS	HRS/ UNIT	TOTAL HRS	CRAFT CODE	CRAFT RATE	TOTAL LABOR K$	ISC LABOR K$
2	Blower & Dryer System	lot	1	1100.00	EU	1.1	1	80.0	80	MA	38.60	3.1	4.2
3	Miscellaneous	lot	1	2000.00	EU	2.0	1	40.0	40	MA	38.60	1.5	3.5
4	Electrical Installation	ea	1	200.00	eu	0.2	1	80.0	80	EI	33.00	2.6	2.8
** Subtotal **						6.3			400			15.0	21.3
** WBS: 1.2.4.2.1.3.1		Vacuum Chamber											
1	Vacuum Chamber (1 cm)		0	0.00		0.0	0	0.0	0		0.00	0.0	0.0
2	Material	lbs	2275	2.32	VQ	5.3	0	0.0	0		0.00	0.0	5.3
3	Fabrication	ea	1	45310.00	A91	45.3	0	0.0	0		0.00	0.0	45.3
4		ea	1	41750.00	A91	41.8	0	0.0	0		0.00	0.0	41.8
5	Fabricate Flanges	lot	1	2620.00	A91	2.6	1	120.0	120	MM	38.60	4.6	7.3
6	Fab Flange Transitions	lot	1	1144.00	A91	1.1	6	30.0	180	MM	38.60	6.9	8.1
7	Assemble/Test		0	0.00		0.0	1	320.0	320	MA	38.60	12.4	12.4
8	System Assembly		0	0.00		0.0	1	80.0	80	MA	38.60	3.1	3.1
9	UHV Bakeout		0	0.00		0.0	1	160.0	160	MA	38.60	6.2	6.2
10	Trial Installation		0	0.00		0.0	1	80.0	80	MA	38.60	3.1	3.1
11	Final Installation		0	0.00		0.0	1	120.0	120	MA	38.60	4.6	4.6
12	Vacuum Chamber Inspection		0	0.00		0.0	1	80.0	80	MM	38.60	3.1	3.1
** Subtotal **						96.1			1140			44.0	140.1
** WBS: 1.2.4.2.1.3.2		Pumping Systems & Instrumentation											
1	Ion Pump/TSP Combination	ea	3	4200.00	CP	12.6	0	0.0	0		0.00	0.0	12.6
2	90 deg Elbow to Pump	ea	3	610.00	CP	1.8	0	0.0	0		0.00	0.0	1.8
3	Right Angle Valve	ea	2	880.00	CP	1.8	0	0.0	0		0.00	0.0	1.8
4	Aluminum Conflats	ea	5	95.00	CP	0.5	0	0.0	0		0.00	0.0	0.5
5	NEG Electrical Feedthru	ea	2	200.00	eu	0.4	0	0.0	0		0.00	0.0	0.4
6	NEG Strip	ea	2	1340.00	CP	2.7	0	0.0	0		0.00	0.0	2.7
7	NEG Strip Mountng Hardwre	ea	2	312.00	eu	0.6	2	60.0	120	MM	38.60	4.6	5.3
8	NEG Strip Assembly	ea	1	104.00	eu	0.1	2	40.0	80	MA	38.60	3.1	3.2
** Subtotal **						20.5			200			7.7	28.2
** WBS: 1.2.4.2.1.3.3		Support Structure											
1	Vacuum Chamber Support	lot	1	2100.00	EU	2.1	1	160.0	160	MM	38.60	6.2	8.3
2	Ion Pump Supports	ea	3	210.00	EU	0.6	3	20.0	60	MM	38.60	2.3	2.9
3	Installation Fixture	ea	1	525.00	EU	0.5	1	80.0	80	MM	38.60	3.1	3.6
** Subtotal **						3.3			300			11.6	14.8
** WBS: 1.2.4.2.1.3.4		Vacuum Diagnostics											
1	IG Controller	eaa	1	895.00	CP	0.9	1	2.0	2	ES	33.00	0.1	1.0
2	Degas Module	ea	1	157.50	CP	0.2	0	0.0	0		0.00	0.0	0.2
3	Second IG Module	ea	1	78.75	CP	0.1	0	0.0	0		0.00	0.0	0.1
4	Process Control Module	ea	1	367.50	CP	0.4	0	0.0	0		0.00	0.0	0.4
5	Rack Mount	ea	1	52.50	CP	0.1	1	1.0	1	ES	33.00	0.0	0.1
6	Remote I/O Module	ea	1	85.00	CP	0.1	0	0.0	0		0.00	0.0	0.1
7	Dual Convectron Module	ea	1	420.00	CP	0.4	0	0.0	0		0.00	0.0	0.4
8	UHV Electrometer Module	ea	1	420.00	CP	0.4	0	0.0	0		0.00	0.0	0.4
9	IEEE-488 Interface	ea	1	378.00	CP	0.4	0	0.0	0		0.00	0.0	0.4
10	Nude Ion Gauge	ea	1	326.55	CP	0.3	1	1.0	1	MS	37.73	0.0	0.4
11	IG Cable: 50 feet	ea	1	204.75	CP	0.2	1	1.0	1	ES	33.00	0.0	0.2
12	Convectron Gauge	ea	1	145.95	CP	0.1	1	1.0	1	MS	37.73	0.0	0.2
13	Convectron Cable: 50 feet	ea	1	220.50	CP	0.2	1	1.0	1	ES	33.00	0.0	0.3
14	IG Connector	ea	1	10.50	EU	0.0	1	1.0	1	MS	37.73	0.0	0.0
15	IG Cable Interface	ea	1	52.50	EU	0.1	1	4.0	4	ES	33.00	0.1	0.2
16	Ion Pump Controller	ea	3	2045.40	CP	6.1	3	2.0	6	ES	33.00	0.2	6.3
17	Ion Pump Cable	ea	3	234.15	CP	0.7	3	4.0	12	ES	33.00	0.4	1.1
18	Ion Pump Cable Interface	ea	3	105.00	EU	0.3	3	4.0	12	ES	33.00	0.4	0.7
19	IEEE-488 Interface	ea	3	522.90	CP	1.6	0	0.0	0		0.00	0.0	1.6
20	ILC Crate	ea	1	1000.00	EU	1.0	1	40.0	40	ES	33.00	1.3	2.3
21	ILC	ea	2	1100.00	EU	2.2	1	40.0	40	ES	33.00	1.3	3.5
22	Sublimation Controller	ea	1	2100.00	CP	2.1	1	4.0	4	ES	33.00	0.1	2.2
23	Sublimation Mux	ea	1	2100.00	EU	2.1	1	80.0	80	ES	33.00	2.6	4.7
24	Filament Cables	set	1	525.00	EU	0.5	1	40.0	40	ES	33.00	1.3	1.8

Technical Components Cost Estimate

ITM NBR	ITM DESCRIPTION	UNIT MEAS	NBR UNITS	UNIT COST COST	BASIS	TOTAL ISC K$	LBR UNTS	HRS/ UNIT	TOTAL HRS	CRAFT CODE	CRAFT RATE	TOTAL LABOR K$	ISC + LABOR K$
25	NEG Power Supply	ea	1	2000.00	eu	2.0	0	0.0	0		0.00	0.0	2.0
** Subtotal **						22.5			246			8.1	30.6
** WBS: 1.2.4.2.1.4	Motor Control System												
1	Controller 500 Indexer	ea	1	1515.00	CP	1.5	0	0.0	0		0.00	0.0	1.5
2	Motor Package PK130M-T	ea	1	4703.00	CP	4.7	0	0.0	0		0.00	0.0	4.7
3	Absolute Encoder	ea	1	1805.00	CP	1.8	0	0.0	0		0.00	0.0	1.8
4	100 Ft cables	set	1	1000.00	CP	1.0	0	0.0	0		0.00	0.0	1.0
5	ILC	ea	1	1100.00	eu	1.1	0	0.0	0		0.00	0.0	1.1
6	ILC Crate (holds 6 ILCs)	ea	1	1000.00	eu	1.0	0	0.0	0		0.00	0.0	1.0
7	Final Installation	lot	1	4000.00	eu	4.0	1	180.0	180	EI	33.00	5.9	9.9
8	Indexer/Cont.	lot	1	2000.00	eu	2.0	1	60.0	60	IEL	62.85	3.8	5.8
9	Shop Installation	lot	1	3000.00	eu	3.0	1	120.0	120	EI	33.00	4.0	7.0
** Subtotal **						20.1			360			13.7	33.8
** WBS: 1.2.4.2.1.5	Installation												
1	Prepare & Truck to Site	lot	1	525.00	eu	0.5	1	80.0	80	MA	38.60	3.1	3.6
2	Rigger's Work	lot	1	1200.00	eu	1.2	1	64.0	64	RG	37.65	2.4	3.6
3	Survey & Alignment		0	0.00		0.0	1	80.0	80	MA	38.60	3.1	3.1
4	Installation	lot	1	315.00	eu	0.3	1	100.0	100	MA	38.60	3.9	4.2
5	Vacuum Hookup/Pumpdown	lot	1	105.00	eu	0.1	1	40.0	40	MA	38.60	1.5	1.6
6	Reinstall Temp Ctrl Housg		0	0.00		0.0	1	40.0	40	MA	38.60	1.5	1.5
7	Miscellaneous		0	0.00		0.0	1	50.0	50	MA	38.60	1.9	1.9
** Subtotal **						2.1			454			17.5	19.6
** WBS: 1.2.4.2.2.1.1	Fixed Aperture												
1	Water coold absorbr assmb	ea	1	523.26	eu	0.5	1	120.0	120	MS	37.73	4.5	5.1
2	Brazing fixtures/tooling	ea	1	209.30	eu	0.2	1	20.0	20	MS	37.73	0.8	1.0
3	Assemble		0	0.00		0.0	1	80.0	80	MS	37.73	3.0	3.0
4	Survey/calibration		0	0.00		0.0	1	16.0	16	MS	37.73	0.6	0.6
5	Vac. checks & bakeout	ea	1	52.33	eu	0.1	1	80.0	80	MS	37.73	3.0	3.1
** Subtotal **						0.8			316			11.9	12.7
** WBS: 1.2.4.2.2.1.2	PBPM #1												
1	Photon BPM System	ea	2	1569.79	A86	3.1	2	160.0	320	MS	37.73	12.1	15.2
2	Vacuum chamber	ea	1	6279.15	eu	6.3	0	0.0	0		0.00	0.0	6.3
3	1-axis transltn mechanism	ea	2	2616.31	eu	5.2	2	40.0	80	MS	37.73	3.0	8.3
4	Assemble	ea	2	523.26	eu	1.0	2	60.0	120	MS	37.73	4.5	5.6
5	Tank Mounting Hardware	ea	6	209.30	eu	1.3	6	4.0	24	MS	37.73	0.9	2.2
6	Survey/calibration		0	0.00		0.0	1	32.0	32	MS	37.73	1.2	1.2
7	Support post	ea	1	3139.57	eu	3.1	0	0.0	0		0.00	0.0	3.1
8	Bakeout & leak checks	ea	1	104.65	eu	0.1	1	80.0	80	MS	37.73	3.0	3.1
9	Pre-installation		10	0.00		0.0	1	80.0	80	MS	37.73	3.0	3.0
10	LCW hardware & connctions	ea	1	313.96	eu	0.3	1	20.0	20	MS	37.73	0.8	1.1
** Subtotal **						20.5			756			28.5	49.0
** WBS: 1.2.4.2.2.1.3	Front End Photon Shutter												
1	Thermal absorber blades	lot	1	1412.81	eu	1.4	2	68.0	136	MS	37.73	5.1	6.5
2	Vacuum chamber	lot	1	7011.72	eu	7.0	1	320.0	320	MS	37.73	12.1	19.1
3	Knuckle assembly	lot	1	261.63	eu	0.3	1	99.0	99	MS	37.73	3.7	4.0
4	Final Assmbly/Instllation	lot	1	1674.44	eu	1.7	1	254.0	254	MS	37.73	9.6	11.3
5	Support post	ea	1	209.30	eu	0.2	1	40.0	40	MS	37.73	1.5	1.7
** Subtotal **						10.6			849			32.0	42.6
** WBS: 1.2.4.2.2.1.4	Fast Valve												
1	Modified Fast Shutter	ea	1	20930.50	eu	20.9	0	0.0	0		0.00	0.0	20.9
2	Assemble & Test	ea	1	104.65	eu	0.1	1	60.0	60	MS	37.73	2.3	2.4
** Subtotal **						21.0			60			2.3	23.3

Technical Components Cost Estimate

ITM NBR	ITM DESCRIPTION	UNIT MEAS	NBR UNITS	UNIT COST	COST BASIS	TOTAL ISC K$	LBR UNTS	HRS/ UNIT	TOTAL HRS	CRAFT CODE	CRAFT RATE	TOTAL LABOR K$	ISC LABOR K$
** WBS: 1.2.4.2.2.1.5	Personnel Safety Shut.												
1	Lead Plunger	ea	1	575.59	eu	0.6	1	52.0	52	MS	37.73	2.0	2.5
2	Vacuum System	ea	1	5311.11	eu	5.3	1	190.0	190	MS	37.73	7.2	12.5
3	Actuator Hardware	ea	1	2825.62	A87	2.8	1	80.0	80	MS	37.73	3.0	5.8
4	Assemble & Test	ea	1	2511.66	eu	2.5	1	156.0	156	MS	37.73	5.9	8.4
** Subtotal **						11.2			478			18.0	29.3
** WBS: 1.2.4.2.2.1.6	Front End Vacuum System												
1	Bellows Assembly	ea	2	2302.36	A86	4.6	0	0.0	0		0.00	0.0	4.6
2	4" UHV Isolation Valve	ea	1	10465.25	cp	10.5	0	0.0	0		0.00	0.0	10.5
3	6" UHV Isolation Valve	ea	2	13604.82	cp	27.2	0	0.0	0		0.00	0.0	27.2
4	4" Pipe Tee/Spool	ea	2	1569.79	eu	3.1	0	0.0	0		0.00	0.0	3.1
5	Spool Support Post	ea	1	523.26	eu	0.5	0	0.0	0		0.00	0.0	0.5
6	Shieldng Wall Transition	ea	1	2616.31	eu	2.6	0	0.0	0		0.00	0.0	2.6
7	Misc UHV Hardware	lot	1	2616.31	eu	2.6	1	40.0	40	MS	37.73	1.5	4.1
8	Bakeout/leak check	lot	1	523.26	eu	0.5	1	80.0	80	MS	37.73	3.0	3.5
9	S.R. REM to conflat	ea	1	313.96	cp	0.3	1	4.0	4	MS	37.73	0.2	0.5
10	Survey/calibration		0	0.00		0.0	2	16.0	32	MS	37.73	1.2	1.2
** Subtotal **						52.0			156			5.9	57.9
** WBS: 1.2.4.2.2.1.7	Splitting Mirror System												
1	Fab/procure mech parts	lot	1	54628.60	eu	54.6	1	1116.0	1116	MS	37.73	42.1	96.7
2	Fab/procure elec & cntrls	lot	1	17476.97	eu	17.5	1	40.0	40	MS	37.73	1.5	19.0
3			0	0.00		0.0	1	90.0	90	ES	33.00	3.0	3.0
4	Fab/procure vac chamber	lot	1	16064.16	eu	16.1	1	100.0	100	MS	37.73	3.8	19.8
5	Vac pumpng,gages,ps,etc.	lot	1	17633.95	eu	17.6	1	16.0	16	MS	37.73	0.6	18.2
6			0	0.00		0.0	1	16.0	16	EI	33.00	0.5	0.5
7	Assemble,bakeout,test	lot	1	523.26	eu	0.5	1	232.0	232	MS	37.73	8.8	9.3
8	Installation	lot	1	627.91	eu	0.6	1	100.0	100	MU	35.92	3.6	4.2
9			0	0.00		0.0	1	20.0	20	MS	37.73	0.8	0.8
10			0	0.00		0.0	1	20.0	20	ES	33.00	0.7	0.7
11			0	0.00		0.0	1	20.0	20	EM	33.00	0.7	0.7
** Subtotal **						107.0			1770			65.9	172.9
** WBS: 1.2.4.2.2.1.8	Front End Mechanical Installation												
1	Assemble/leak check	lot	3	523.26	eu	1.6	3	16.0	48	MU	35.92	1.7	3.3
2	Transport/set-up	lot	4	209.30	eu	0.8	4	32.0	128	MU	35.92	4.6	5.4
3	Unistrit/misc hardware	lot	1	523.26	eu	0.5	1	40.0	40	MU	35.92	1.4	2.0
4	Tools & Misc	lot	1	523.26	eu	0.5	1	40.0	40	MS	37.73	1.5	2.0
5	Misc. machine shop	lot	1	523.26	eu	0.5	1	40.0	40	MS	37.73	1.5	2.0
6	Lead Sheilding Installatn	lot	1	3139.57	eu	3.1	1	80.0	80	MU	35.92	2.9	6.0
7	Shielding Wall modificatn	lot	1	523.26	eu	0.5	1	100.0	100	MU	35.92	3.6	4.1
8	F.E. Support Rail	ea	1	523.26	eu	0.5	1	120.0	120	MS	37.73	4.5	5.1
9	Survey & Alignment	lot	1	209.30	eu	0.2	1	103.0	103	MS	37.73	3.9	4.1
** Subtotal **						8.4			699			25.7	34.0
** WBS: 1.2.4.2.2.2.1	Fixed Aperture Controls												
1	Vacuum Feedthru	ea	1	261.63	eu	0.3	1	8.0	8	MU	35.92	0.3	0.5
2	Electrometer	ea	1	2925.04	cp	2.9	1	8.0	8	ES	33.00	0.3	3.2
3	Eurocard Crate	ea	1	837.22	eu	0.8	1	16.0	16	ES	33.00	0.5	1.4
4	ILC	ea	1	1046.52	eu	1.0	1	16.0	16	ES	33.00	0.5	1.6
5	Cables	lot	1	313.96	eu	0.3	1	16.0	16	ES	33.00	0.5	0.8
6	Installation		0	0.00		0.0	1	40.0	40	ES	33.00	1.3	1.3
7	Test		0	0.00		0.0	1	16.0	16	EM	33.00	0.5	0.5
** Subtotal **						5.4			120			4.0	9.4
** WBS: 1.2.4.2.2.2.2	PBPM #1 Controls												
1	Ion Pump 110/LS	ea	1	4970.99	cp	5.0	1	16.0	16	MS	37.73	0.6	5.6
2	Ion Pump PS	ea	1	2093.05	cp	2.1	1	16.0	16	ES	33.00	0.5	2.6
3	Bias Power Supply	ea	1	523.26	eu	0.5	1	8.0	8	ES	33.00	0.3	0.8
4	Vacuum Feedthru	ea	5	261.63	eu	1.3	5	2.0	10	MS	37.73	0.4	1.7

Technical Components Cost Estimate

ITM NBR	ITM DESCRIPTION	UNIT MEAS	NBR UNITS	UNIT COST	COST BASIS	TOTAL ISC K$	LBR UNTS	HRS/ UNIT	TOTAL HRS	CRAFT CODE	CRAFT RATE	TOTAL LABOR K$	ISC + LABOR K$
5	ILC & SBX	ea	2	1465.13	eu	2.9	2	16.0	32	ES	33.00	1.1	4.0
6	Electrometer	ea	4	1773.86	eu	7.1	4	4.0	16	ES	33.00	0.5	7.6
7	Eurocard Crate	ea	1	837.22	eu	0.8	1	16.0	16	ES	33.00	0.5	1.4
8	Motor Controller	ea	1	2511.66	eu	2.5	1	16.0	16	ES	33.00	0.5	3.0
9	Water Temp Controller	ea	1	2066.89	cp	2.1	1	16.0	16	MU	35.92	0.6	2.6
10	Cables	lot	1	523.26	eu	0.5	1	16.0	16	ES	33.00	0.5	1.1
11	Installation		0	0.00		0.0	1	40.0	40	ES	33.00	1.3	1.3
12	Test		0	0.00		0.0	1	40.0	40	EM	33.00	1.3	1.3
13	Flow Switch	ea	2	418.61	eu	0.8	2	4.0	8	MU	35.92	0.3	1.1
14	Ion Gauge	ea	1	3139.57	eu	3.1	1	8.0	8	ES	33.00	0.3	3.4
** Subtotal **						28.8			258			8.7	37.5
** WBS: 1.2.4.2.2.2.3	Photon Shutter Controls												
1	Ion Pump 400 l/s	ea	1	10360.60	cp	10.4	1	8.0	8	MU	35.92	0.3	10.6
2	Ion Pump PS	ea	1	2066.89	cp	2.1	1	8.0	8	ES	33.00	0.3	2.3
3	Ion Gauge	ea	1	3139.57	eu	3.1	1	8.0	8	ES	33.00	0.3	3.4
4	ILC & SBX	ea	1	1465.13	eu	1.5	1	16.0	16	ES	33.00	0.5	2.0
5	Position Indicators	set	1	523.26	eu	0.5	1	16.0	16	ES	33.00	0.5	1.1
6	Air Solenoids	ea	4	523.26	eu	2.1	4	8.0	32	MU	35.92	1.1	3.2
7	Air Press Interlock	ea	1	523.26	eu	0.5	1	16.0	16	MU	35.92	0.6	1.1
8	Installation		0	0.00		0.0	1	40.0	40	ES	33.00	1.3	1.3
9	Test		0	0.00		0.0	1	24.0	24	EM	33.00	0.8	0.8
** Subtotal **						20.2			168			5.7	25.9
** WBS: 1.2.4.2.2.2.4	Fast Valve Controls												
1	Ion Gauge	ea	3	3139.57	eu	9.4	3	8.0	24	ES	33.00	0.8	10.2
2	Trigger Unit	ea	1	5232.62	eu	5.2	1	80.0	80	ES	33.00	2.6	7.9
3	ILC	ea	1	1046.52	eu	1.0	1	16.0	16	ES	33.00	0.5	1.6
4	Eurocard Crate	ea	1	837.22	eu	0.8	1	16.0	16	ES	33.00	0.5	1.4
5	Installation		0	0.00		0.0	1	40.0	40	ES	33.00	1.3	1.3
6	Test		0	0.00		0.0	1	40.0	40	EM	33.00	1.3	1.3
** Subtotal **						16.5			216			7.1	23.7
** WBS: 1.2.4.2.2.2.5	Personnel Safety Shutter Controls												
1	Ion Pump 200 l/s	ea	1	6174.50	cp	6.2	1	8.0	8	MU	35.92	0.3	6.5
2	Ion Pump PS	ea	1	2066.89	cp	2.1	1	8.0	8	ES	33.00	0.3	2.3
3	Ion Gauge	ea	1	3139.57	eu	3.1	1	8.0	8	ES	33.00	0.3	3.4
4	ILC & SBX	ea	1	1465.13	eu	1.5	1	16.0	16	ES	33.00	0.5	2.0
5	Position Indicators	set	1	523.26	eu	0.5	1	16.0	16	ES	33.00	0.5	1.1
6	Air Solenoids	ea	4	523.26	eu	2.1	4	8.0	32	MU	35.92	1.1	3.2
7	Air Press Interlock	ea	1	523.26	eu	0.5	1	16.0	16	MU	35.92	0.6	1.1
8	Installation		0	0.00		0.0	1	40.0	40	ES	33.00	1.3	1.3
9	Test		0	0.00		0.0	1	24.0	24	EM	33.00	0.8	0.8
** Subtotal **						16.0			168			5.7	21.7
** WBS: 1.2.4.2.2.2.6	Vacuum System Controls												
0	X-connect	ea	1	282.56	cp	0.3	1	24.0	24	ES	33.00	0.8	1.1
1	Cable Set	lot	3	104.65	eu	0.3	3	4.0	12	ES	33.00	0.4	0.7
3	Relay blocks	ea	1	606.98	cp	0.6	1	24.0	24	ES	33.00	0.8	1.4
4	48 Chan Opto-isolator	ea	1	732.57	cp	0.7	1	24.0	24	ES	33.00	0.8	1.5
** Subtotal **						1.9			84			2.8	4.7
** WBS: 1.2.4.2.2.3	Front End Safety Systems												
1	ILC & SBX	ea	2	1465.13	eu	2.9	0	0.0	0		0.00	0.0	2.9
2	Eurocard Crate	ea	1	837.22	eu	0.8	0	0.0	0		0.00	0.0	0.8
3	Key Panel	ea	1	313.96	cp	0.3	0	0.0	0		0.00	0.0	0.3
4	Monitor Lights Panel	ea	6	261.63	cp	1.6	0	0.0	0		0.00	0.0	1.6
5	Push Button Panel	ea	1	261.63	cp	0.3	0	0.0	0		0.00	0.0	0.3
6	Breaker Panel	ea	1	261.63	cp	0.3	0	0.0	0		0.00	0.0	0.3
7	Cables	lot	1	104.65	eu	0.1	0	0.0	0		0.00	0.0	0.1
8	Wiring Assembly		0	0.00		0.0	1	80.0	80	ES	33.00	2.6	2.6

Technical Components Cost Estimate

ITM NBR	ITM DESCRIPTION	UNIT MEAS	NBR UNITS	UNIT COST	COST BASIS	TOTAL ISC K$	LBR UNTS	HRS/ UNIT	TOTAL HRS	CRAFT CODE	CRAFT RATE	TOTAL LABOR K$	ISC + LABOR K$
9	PLIC radiation monitor	ft	100	11.51	cp	1.2	0	0.0	0		0.00	0.0	1.2
10	PLIC Camac HV PS	ea	1	1046.52	eu	1.0	0	0.0	0		0.00	0.0	1.0
11	PLIC Monitoring Card	ea	1	2825.62	cp	2.8	0	0.0	0		0.00	0.0	2.8
12	PLIC Other Electronics	lot	1	3139.57	eu	3.1	1	20.0	20	ES	33.00	0.7	3.8
13	PLIC Installation	lot	1	837.22	eu	0.8	1	8.0	8	EI	33.00	0.3	1.1
14	PLIC Installation	ea	100	1.05	eu	0.1	1	8.0	8	EI	33.00	0.3	0.4
15	Systems Test		0	0.00		0.0	1	80.0	80	EM	33.00	2.6	2.6
16	Video Camera & Lens	ea	1	837.22	cp	0.8	0	0.0	0		0.00	0.0	0.8
17	Video Monitor	ea	1	313.96	cp	0.3	0	0.0	0		0.00	0.0	0.3
18	Coax: camera to monitor	ea	1	52.33	eu	0.1	1	2.0	2	EI	33.00	0.1	0.1
19	Video Connectors	ea	2	5.23	eu	0.0	2	0.5	1	ES	33.00	0.0	0.0
20	Padlocks & misc hardware	lot	1	523.26	eu	0.5	0	0.0	0		0.00	0.0	0.5
** Subtotal **						17.1			199			6.6	23.7
** WBS: 1.2.4.2.2.4	Front End Utilities												
1	F.E. pneumatic service	lot	1	2093.05	eu	2.1	1	120.0	120	MU	35.92	4.3	6.4
2	F.E. LCW service	lot	1	2093.05	eu	2.1	1	120.0	120	MU	35.92	4.3	6.4
3	Cable trays, conduit, etc	lot	1	2093.05	eu	2.1	1	120.0	120	PE	38.90	4.7	6.8
4	Unistrut & misc hardware	lot	1	1046.52	eu	1.0	1	40.0	40	MS	37.73	1.5	2.6
5	Double elec rack	ea	1	1255.83	eu	1.3	1	16.0	16	ES	33.00	0.5	1.8
6	BA panel 3 ph 30A	ea	1	52.33	cp	0.1	1	0.5	0	EI	33.00	0.0	0.1
7	Breaker panel	ea	2	209.30	cp	0.4	2	4.0	8	EI	33.00	0.3	0.7
8	Plug Strip	ea	2	20.93	eu	0.0	2	1.0	2	EI	33.00	0.1	0.1
9	Rack Fans	ea	2	52.33	cp	0.1	2	1.0	2	ES	33.00	0.1	0.2
10	X-conn blocks & frame	ea	1	523.26	cp	0.5	1	24.0	24	EI	33.00	0.8	1.3
11	Relay blocks & frame	ea	1	523.26	cp	0.5	1	24.0	24	EI	33.00	0.8	1.3
** Subtotal **						10.2			476			17.3	27.6
** WBS: 1.2.4.2.2.5	Front End Mech/Elect System Integration												
1	Controls Checkout/Debug		0	0.00		0.0	7	16.0	112	MT	27.85	3.1	3.1
2			0	0.00		0.0	7	16.0	112	EM	33.00	3.7	3.7
3			0	0.00		0.0	7	16.0	112	CP	59.40	6.7	6.7
4			0	0.00		0.0	7	16.0	112	EI	33.00	3.7	3.7
5	Safety System Check/Debug		0	0.00		0.0	4	8.0	32	MT	27.85	0.9	0.9
6			0	0.00		0.0	4	8.0	32	EM	33.00	1.1	1.1
7			0	0.00		0.0	4	8.0	32	EI	33.00	1.1	1.1
8	Vacuum System Checks		0	0.00		0.0	4	16.0	64	MT	27.85	1.8	1.8
9			0	0.00		0.0	4	16.0	64	EM	33.00	2.1	2.1
10	Misc. Hardware	lot	1	1046.52	eu	1.0	1	40.0	40	MS	37.73	1.5	2.6
** Subtotal **						1.0			712			25.6	26.6
** WBS: 1.2.4.2.3.1.1	Fab/Buy Machined Parts & Subassy's												
1	Machine absorber blades	ea	2	1000.00	A91	2.0	2	40.0	80	MS	37.73	3.0	5.0
2	Braze absorber blades	ea	2	100.00	A91	0.2	2	20.0	40	MS	37.73	1.5	1.7
3	Brazing tooling/fixtures	ea	1	200.00	A91	0.2	1	20.0	20	MS	37.73	0.8	1.0
4	Blade/pivot mounting	ea	2	500.00	A91	1.0	2	60.0	120	MS	37.73	4.5	5.5
5	Actuator mechanism	ea	2	500.00	A91	1.0	2	40.0	80	MS	37.73	3.0	4.0
6	Limit stops & switches	ea	2	100.00	A91	0.2	2	20.0	40	MS	37.73	1.5	1.7
7	Bellws/conflat ass'y/weld	ea	2	1000.00	A91	2.0	2	40.0	80	MS	37.73	3.0	5.0
** Subtotal **						6.6			460			17.4	24.0
** WBS: 1.2.4.2.3.1.2	Fab/Buy Electrical and Controls												
1	Stepper/encoder/limits	ea	2	3000.00	eu	6.0	2	20.0	40	MS	37.73	1.5	7.5
2	Driver/encoder cables	ea	2	200.00	eu	0.4	1	16.0	16	EI	33.00	0.5	0.9
3	Flow switch & interlocks	ea	2	400.00	eu	0.8	2	4.0	8	EI	33.00	0.3	1.1
4	VME module,RS232,B-port	eat	1	800.00	eu	0.8	1	16.0	16	EI	33.00	0.5	1.3
5	CAble, RS232	ea	2	50.00	eu	0.1	0	0.0	0		0.00	0.0	0.1
6	Motor/encoder controllers	ea	2	2000.00	eu	4.0	2	8.0	16	EI	33.00	0.5	4.5
7	Triax cable, 100 '	lot	2	100.00	eu	0.2	2	8.0	16	EI	33.00	0.5	0.7
** Subtotal **						12.3			112			3.9	16.2

Technical Components Cost Estimate

ITM NBR	ITM DESCRIPTION	UNIT MEAS	NBR UNITS	UNIT COST COST BASIS	TOTAL ISC K$	LBR UNTS	HRS/ UNIT	TOTAL HRS	CRAFT CODE	CRAFT RATE	TOTAL LABOR K$	ISC + LABOR K$
** WBS: 1.2.4.2.3.1.3	Fab/Buy Vacuum Chamber & Supports											
1	Custom vacuum chamber	ea	1	8000.00 A91	8.0	1	40.0	40	MU	35.92	1.4	9.4
2	Misc flanges/UHV hardware	lot	1	2500.00 eu	2.5	0	0.0	0		0.00	0.0	2.5
3	Mounting struts/hardware	ea	6	500.00 A91	3.0	6	8.0	48	MS	37.73	1.8	4.8
4	Support posts,frame,hrdwr	lot	1	1500.00 A91	1.5	1	40.0	40	MS	37.73	1.5	3.0
** Subtotal **					15.0			128			4.8	19.8
** WBS: 1.2.4.2.3.1.4	Vacuum Pumping, Gauges, Controllers, P.S.											
1	Ion pump, 400 l/s	ea	1	7500.00 A91	7.5	1	4.0	4	MU	35.92	0.1	7.6
2	Ion pump controller	ea	1	2500.00 A91	2.5	0	4.0	0	EI	33.00	0.0	2.5
3	Ion pump cable,bakeable	ea	1	250.00 A91	0.2	0	0.0	0		0.00	0.0	0.2
4	IEEE-48 cable,3m cntrller	ea	1	150.00 cp	0.1	0	0.0	0		0.00	0.0	0.1
5	Roughing valve	ea	2	650.00 A91	1.3	0	0.0	0		0.00	0.0	1.3
6	Ion gauge & controls	ea	1	3500.00 A91	3.5	1	4.0	4	MU	35.92	0.1	3.6
7	Ion gauge cable, bakeable	ea	1	250.00 cp	0.2	1	4.0	4	EI	33.00	0.1	0.4
8	Junction box,IG cable	ea	1	200.00 eu	0.2	1	4.0	4	EI	33.00	0.1	0.3
9	Interlock cable	ea	1	100.00 eu	0.1	0	0.0	0		0.00	0.0	0.1
** Subtotal **					15.8			16			0.6	16.3
** WBS: 1.2.4.2.3.1.5	Assemble, Bakeout, Test											
1	Assemble & test	ea	1	500.00 eu	0.5	2	80.0	160	MU	35.92	5.7	6.2
2	Bakeout & UHV qualify	lot	1	500.00 eu	0.5	2	40.0	80	MU	35.92	2.9	3.4
3	Survey/calibration		0	0.00	0.0	2	16.0	32	MU	35.92	1.1	1.1
4	Misc tools,fixtures,cart	lot	1	1000.00 eu	1.0	1	80.0	80	MU	35.92	2.9	3.9
** Subtotal **					2.0			352			12.6	14.6
** WBS: 1.2.4.2.3.1.6	Installation											
1	LCW hardware/connections	lot	1	300.00 eu	0.3	2	16.0	32	MU	35.92	1.1	1.4
2	Transport/on-site setup	lot	1	200.00 eu	0.2	2	16.0	32	MU	35.92	1.1	1.3
3	Vac assemble & leak check	lot	1	50.00 eu	0.1	2	16.0	32	MU	35.92	1.1	1.2
4	Installation alignment		0	0.00	0.0	2	16.0	32	MS	37.73	1.2	1.2
5	Mech install/test/debug	lot	1	50.00 eu	0.1	2	16.0	32	MU	35.92	1.1	1.2
6	Elec installation		0	0.00	0.0	1	16.0	16	IEL	62.85	1.0	1.0
** Subtotal **					0.6			176			6.8	7.4
** WBS: 1.2.4.2.3.1.7	Beam Diagnostic Device											
1	Linear drive mech(VGassy)	ea	1	3000.00 cp	3.0	0	0.0	0		0.00	0.0	3.0
2	Mods for water cooling	ea	1	200.00 eu	0.2	1	20.0	20	MS	37.73	0.8	1.0
3	In-vac parts fab	lot	1	1000.00 eu	1.0	1	80.0	80	MS	37.73	3.0	4.0
4	Brazing & welding assy	ea	1	200.00 A91	0.2	1	20.0	20	MS	37.73	0.8	1.0
5	Phosphor coating	ea	1	500.00 eu	0.5	0	0.0	0		0.00	0.0	0.5
** Subtotal **					4.9			120			4.5	9.4
** WBS: 1.2.4.2.3.1.8	Collimating Spool											
1	Spool piece	ea	1	1250.00 A91	1.2	1	8.0	8	MU	35.92	0.3	1.5
2	Misc flanges,UHV hardware	lot	1	500.00 eu	0.5	0	0.0	0		0.00	0.0	0.5
3	Lead shielding & mounting	lot	1	500.00 eu	0.5	1	40.0	40	MS	37.73	1.5	2.0
** Subtotal **					2.2			48			1.8	4.0
** WBS: 1.2.4.2.3.1.9	Bellows											
1	Welded bellows assy	ea	1	3000.00 A91	3.0	1	4.0	4	MS	37.73	0.2	3.2
2	Blank flanges,gaskets,etc	lot	1	300.00 cp	0.3	0	0.0	0		0.00	0.0	0.3
3	Inspection,cleaning,bake	ea	1	50.00 eu	0.1	1	4.0	4	MU	35.92	0.1	0.2
** Subtotal **					3.3			8			0.3	3.6
** WBS: 1.2.4.2.3.1.10	Titanium Sublimation Pump											
1	TSP pump spool piece	ea	1	2700.00 A91	2.7	0	0.0	0		0.00	0.0	2.7
2	TSP filaments&controller	ea	1	3500.00 eu	3.5	1	8.0	8	EI	33.00	0.3	3.8
3	Flanges,& UHV hardware	lot	1	500.00 eu	0.5	0	0.0	0		0.00	0.0	0.5

Technical Components Cost Estimate

ITM NBR	ITM DESCRIPTION	UNIT MEAS	NBR UNITS	UNIT COST COST	BASIS	TOTAL ISC K$	LBR UNTS	HRS/ UNIT	TOTAL HRS	CRAFT CODE	CRAFT RATE	TOTAL LABOR K$	ISC + LABOR K$
4	Support post, misc hardwr	lot	1	1500.00	eu	1.5	1	20.0	20	MS	37.73	0.8	2.3
5	Struts & hardware	ea	6	500.00	A91	3.0	6	8.0	48	MU	35.92	1.7	4.7
6	Misc extrusns, mounts,etc	lot	1	1000.00	eu	1.0	1	20.0	20	MS	37.73	0.8	1.8
** Subtotal **						12.2			96			3.5	15.7
** WBS: 1.2.4.2.3.1.11	Isolation Valve												
1	Valve & contrllr proc.	ea	1	15000.00	vq	15.0	0	0.0	0		0.00	0.0	15.0
2	Prelim assembl & test	ea	1	50.00	eu	0.1	1	8.0	8	MU	35.92	0.3	0.3
3	Inspection,cleaning,etc.	lot	1	50.00	eu	0.1	1	4.0	4	MU	35.92	0.1	0.2
4	Cables & connectors	lot	1	200.00	eu	0.2	1	2.0	2	EI	33.00	0.1	0.3
5	Blank flanges & hardware	lot	2	200.00	eu	0.4	0	0.0	0		0.00	0.0	0.4
** Subtotal **						15.7			14			0.5	16.2
** WBS: 1.2.4.2.3.2.1	Fab/Buy Mech Parts & Subassy's												
1	Mirror polishing	ea	1	20300.00	A91	20.3	0	0.0	0		0.00	0.0	20.3
2	Optical coating	ea	1	1000.00	A88	1.0	0	0.0	0		0.00	0.0	1.0
3	Substrate parts machining	lot	1	3000.00	A91	3.0	0	0.0	0		0.00	0.0	3.0
4	Substrate brzng/leak chk	ea	1	200.00	eu	0.2	1	20.0	20	MU	35.92	0.7	0.9
5	Braze & leak chk fixtures	ea	1	200.00	A91	0.2	1	40.0	40	MU	35.92	1.4	1.6
6	UHV mirrr in-vac mounting	ea	1	1000.00	eu	1.0	1	120.0	120	MS	37.73	4.5	5.5
7	Mirror positioning mech	ea	1	1000.00	eu	1.0	1	80.0	80	MS	37.73	3.0	4.0
8	Mirror shippng crate/mnt	ea	1	800.00	A91	0.8	0	32.0	0	MS	37.73	0.0	0.8
9	Misc UHV flanges/hardware	lot	1	1000.00	eu	1.0	0	0.0	0		0.00	0.0	1.0
10	Bellows/conflat ass'y	ea	1	2500.00	A91	2.5	0	0.0	0		0.00	0.0	2.5
11	Tube/joystick ass'y	ea	1	200.00	A86	0.2	1	60.0	60	MS	37.73	2.3	2.5
12	Masks: parts & machining	ea	4	3000.00	A91	12.0	0	0.0	0		0.00	0.0	12.0
13	Masks:Braze & weld assy	ea	4	200.00	A91	0.8	4	40.0	160	MU	35.92	5.7	6.5
14	Lead shielding	ea	1	500.00	eu	0.5	1	40.0	40	MU	35.92	1.4	1.9
** Subtotal **						44.5			520			19.1	63.6
** WBS: 1.2.4.2.3.2.2	Fab/Buy Electrical and Controls												
1	Stepper/encoder/limits	ea	3	2500.00	eu	7.5	3	20.0	60	MS	37.73	2.3	9.8
2	Driver/encoder cables	ea	3	200.00	eu	0.6	3	16.0	48	EI	33.00	1.6	2.2
3	Flow switch & interlocks	ea	1	400.00	eu	0.4	1	4.0	4	EI	33.00	0.1	0.5
4	Module, VME, RS232,B-port	ea	1	800.00	eu	0.8	1	16.0	16	EI	33.00	0.5	1.3
5	Cable, RS232	ea	3	50.00	eu	0.1	0	0.0	0		0.00	0.0	0.1
6	Glow discharg optcl clean	ea	1	10000.00	eu	10.0	1	40.0	40	EI	33.00	1.3	11.3
** Subtotal **						19.5			168			5.8	25.3
** WBS: 1.2.4.2.3.2.3	Fab/Buy Vacuum Chamber & Supports												
1	Custom vacuum chamber	ea	1	10000.00	A91	10.0	0	0.0	0		0.00	0.0	10.0
2	Downstream mask chamber	ea	1	2500.00	cp	2.5	0	0.0	0		0.00	0.0	2.5
3	Misc. flanges/UHV hardwre	lot	1	1000.00	eu	1.0	0	0.0	0		0.00	0.0	1.0
4	Roughing valve	ea	2	650.00	cp	1.3	0	0.0	0		0.00	0.0	1.3
5	Mounting struts/hardware	ea	2	500.00	A91	1.0	2	8.0	16	MS	37.73	0.6	1.6
6	Motorized struts/hardware	ea	4	1000.00	eu	4.0	4	16.0	64	MS	37.73	2.4	6.4
7	Support posts	ea	1	1500.00	A91	1.5	1	40.0	40	MS	37.73	1.5	3.0
8	Pump welded bellws assy	ea	1	4000.00	A91	4.0	0	0.0	0		0.00	0.0	4.0
9	Bellws inspect/clean/bake	ea	1	50.00	eu	0.1	1	4.0	4	MU	35.92	0.1	0.2
** Subtotal **						25.4			124			4.7	30.0
** WBS: 1.2.4.2.3.2.4	Vacuum Pumping, Gauges, Controllers, P.S.												
1	Ion pump, 400 l/s	ea	1	7500.00	A91	7.5	1	8.0	8	MU	35.92	0.3	7.8
2	Ion pump controller	ea	1	2500.00	A91	2.5	1	8.0	8	EI	33.00	0.3	2.8
3	Ion pump cable,bakeable	ea	1	250.00	A91	0.2	0	0.0	0		0.00	0.0	0.2
4	IEEE-48 cable,3m cntrller	ea	1	150.00	cp	0.1	0	0.0	0		0.00	0.0	0.1
5	Ion gauge & controls	ea	1	3500.00	A91	3.5	1	8.0	8	MU	35.92	0.3	3.8
6	Ion gauge cable, bakeable	ea	1	250.00	cp	0.2	1	8.0	8	EI	33.00	0.3	0.5
7	Junction box,IG cable	ea	1	250.00	eu	0.2	0	0.0	0		0.00	0.0	0.2
8	Interlock cable	ea	1	100.00	eu	0.1	0	0.0	0		0.00	0.0	0.1

Technical Components Cost Estimate

ITM NBR	ITM DESCRIPTION	UNIT MEAS	NBR UNITS	UNIT COST	COST BASIS	TOTAL ISC K$	LBR UNTS	HRS/ UNIT	TOTAL HRS	CRAFT CODE	CRAFT RATE	TOTAL LABOR K$	ISC + LABOR K$
** Subtotal **						14.5			32			1.1	15.6
** WBS: 1.2.4.2.3.2.5	Assemble, Bakeout, Test												
1	Assemble & test	ea	1	500.00	eu	0.5	1	120.0	120	MS	37.73	4.5	5.0
2	Bakeout & UHV qualify	lot	1	500.00	eu	0.5	1	120.0	120	MU	35.92	4.3	4.8
3	Survey/calibration		0	0.00		0.0	2	16.0	32	MU	35.92	1.1	1.1
4	Misc tools/fixtrs/cart	ea	1	1000.00	eu	1.0	1	80.0	80	MS	37.73	3.0	4.0
** Subtotal **						2.0			352			13.0	15.0
** WBS: 1.2.4.2.3.2.6	Installation												
1	LCW hardware/connections	lot	1	300.00	eu	0.3	1	16.0	16	MU	35.92	0.6	0.9
2	Transport/on-site setup	lot	1	200.00	eu	0.2	2	16.0	32	MU	35.92	1.1	1.3
3	Vac assemble & leak check	lot	1	50.00	eu	0.1	1	20.0	20	MU	35.92	0.7	0.8
4	Installation alignment		0	0.00		0.0	2	32.0	64	MU	35.92	2.3	2.3
5	Mech install/test/debug	lot	1	500.00	eu	0.5	2	40.0	80	MU	35.92	2.9	3.4
6	Elec installation		0	0.00		0.0	1	20.0	20	IEL	62.85	1.3	1.3
** Subtotal **						1.1			232			8.9	9.9
** WBS: 1.2.4.2.3.2.7	Bellows												
1	Welded bellows assy	ea	1	4000.00	A91	4.0	0	0.0	0		0.00	0.0	4.0
2	Blank flnges,gskts,etc	lot	2	300.00	cp	0.6	0	0.0	0		0.00	0.0	0.6
3	Inspct,clean,prelim bake	ea	2	50.00	eu	0.1	2	4.0	8	MU	35.92	0.3	0.4
** Subtotal **						4.7			8			0.3	5.0
** WBS: 1.2.4.2.3.2.8	Collimating Spool												
1	Spool piece	ea	1	2000.00	A91	2.0	1	8.0	8	MU	35.92	0.3	2.3
2	Misc flanges & UHV hrdwre	ea	1	500.00	eu	0.5	1	8.0	8	MS	37.73	0.3	0.8
3	Lead shielding/mounting	ea	1	500.00	eu	0.5	1	40.0	40	MS	37.73	1.5	2.0
** Subtotal **						3.0			56			2.1	5.1
** WBS: 1.2.4.2.3.2.9	Isolation Valve												
1	Valve & contrllr proc.	ea	1	15000.00	A91	15.0	1	8.0	8	MU	35.92	0.3	15.3
2	Prelim assmble & test	ea	1	50.00	eu	0.1	1	4.0	4	MU	35.92	0.1	0.2
3	Inspect,clean, etc	ea	1	50.00	eu	0.1	1	4.0	4	MU	35.92	0.1	0.2
4	Cables & connectors	lot	1	200.00	eu	0.2	1	2.0	2	EI	33.00	0.1	0.3
5	Blank flanges & hardware	lot	2	200.00	eu	0.4	0	0.0	0		0.00	0.0	0.4
** Subtotal **						15.7			18			0.6	16.3
** WBS: 1.2.4.2.3.5.1.1	Bellows												
1	Welded bellows assy	ea	2	2500.00	A91	5.0	2	4.0	8	MS	37.73	0.3	5.3
2	Blank flanges,gaskets,etc	lot	2	300.00	cp	0.6	0	0.0	0		0.00	0.0	0.6
3	Inspection,cleaning,bake	ea	2	50.00	eu	0.1	2	4.0	8	MU	35.92	0.3	0.4
** Subtotal **						5.7			16			0.6	6.3
** WBS: 1.2.4.2.3.5.1.2	Slit Mechanical Assembly												
1	Flanges & flexure plate	ea	1	1000.00	eu	1.0	1	80.0	80	MS	37.73	3.0	4.0
2	Cf feedthrus for elctncs	ea	4	200.00	eu	0.8	0	0.0	0		0.00	0.0	0.8
3	Viewports & mirrors	ea	2	200.00	eu	0.4	2	8.0	16	MS	37.73	0.6	1.0
4	Brazing & fixtures	ea	1	100.00	eu	0.1	1	20.0	20	MU	35.92	0.7	0.8
5	Feedthrus - welding	ea	1	50.00	eu	0.1	1	8.0	8	MS	37.73	0.3	0.4
6	Blades fab/buy	ea	2	5000.00	eu	10.0	0	0.0	0		0.00	0.0	10.0
7	LCW hardware	ea	1	100.00	eu	0.1	1	8.0	8	MU	35.92	0.3	0.4
8	Micrometer mech	ea	1	1000.00	eu	1.0	1	20.0	20	MS	37.73	0.8	1.8
9	Outside vac mntng hrdware	lot	1	500.00	eu6	0.5	1	20.0	20	MS	37.73	0.8	1.3
10	Blade alignment fixtures	lot	1	200.00	eu	0.2	1	20.0	20	MS	37.73	0.8	1.0
** Subtotal **						14.1			192			7.2	21.3

Technical Components Cost Estimate

ITM NBR	ITM DESCRIPTION	UNIT MEAS	NBR UNITS	UNIT COST	COST BASIS	TOTAL ISC K$	LBR UNTS	HRS/ UNIT	TOTAL HRS	CRAFT CODE	CRAFT RATE	TOTAL LABOR K$	ISC LABOR K$
** WBS: 1.2.4.2.3.5.1.3	Support Systems												
1	Slit assy mntng hardwre	ea	6	1000.00	eu	6.0	6	8.0	48	MS	37.73	1.8	7.8
2	Support post & hardware	ea	1	500.00	eu	0.5	1	40.0	40	MS	37.73	1.5	2.0
3	Struts & mntng hardwre	ea	6	500.00	eu	3.0	6	8.0	48	MS	37.73	1.8	4.8
4	Support post & hardware	ea	1	300.00	eu	0.3	1	20.0	20	MS	37.73	0.8	1.1
** Subtotal **						9.8			156			5.9	15.7
** WBS: 1.2.4.2.3.5.1.4	Spools												
1	Diagnostic spool piece	ea	1	2000.00	eu	2.0	0	0.0	0		0.00	0.0	2.0
2	Collmtng spool piece	ea	1	1250.00	A91	1.2	1	8.0	8	MU	35.92	0.3	1.5
3	Misc flanges & UHV hardwr	lot	1	500.00	eu	0.5	0	0.0	0		0.00	0.0	0.5
4	Lead shielding & mounting	ea	1	500.00	eu	0.5	1	40.0	40	MS	37.73	1.5	2.0
** Subtotal **						4.2			48			1.8	6.0
** WBS: 1.2.4.2.3.5.1.5	Vacuum System												
1	Ion pump 120 l/s	ea	1	4000.00	A91	4.0	1	4.0	4	MU	35.92	0.1	4.1
2	Ion pump controller	ea	1	1600.00	A91	1.6	1	4.0	4	EI	33.00	0.1	1.7
3	Ion pump cable, bakeable	ea	1	250.00	cp	0.2	0	0.0	0		0.00	0.0	0.2
4	IEEE-48 cable, 3m cntrllr	ea	1	150.00	cp	0.1	0	0.0	0		0.00	0.0	0.1
5	Roughing valve	ea	2	650.00	A91	1.3	0	0.0	0		0.00	0.0	1.3
6	Ion gauge & controls	ea	1	3500.00	A91	3.5	1	4.0	4	MU	35.92	0.1	3.6
7	Ion gauge cable, bakeable	ea	1	250.00	cp	0.2	1	4.0	4	EI	33.00	0.1	0.4
8	Junction box, IG cable	ea	1	200.00	eu	0.2	1	4.0	4	EI	33.00	0.1	0.3
9	Interlock cable	ea	1	100.00	eu	0.1	0	0.0	0		0.00	0.0	0.1
** Subtotal **						11.3			20			0.7	12.0
** WBS: 1.2.4.2.3.5.1.6	Isolation Valve												
1	Valve & controller proc	ea	1	10000.00	vq	10.0	0	0.0	0		0.00	0.0	10.0
2	Prelim assemble & test	ea	1	50.00	eu	0.1	1	8.0	8	MU	35.92	0.3	0.3
3	Inspect,clean,etc	ea	1	50.00	eu	0.1	1	4.0	4	MU	35.92	0.1	0.2
4	Cables & connectors	ea	1	200.00	eu	0.2	1	2.0	2	EI	33.00	0.1	0.3
5	Blank flanges & hardware	lot	2	200.00	eu	0.4	0	0.0	0		0.00	0.0	0.4
** Subtotal **						10.7			14			0.5	11.2
** WBS: 1.2.4.2.3.5.1.7	Assemble and Test												
1	Assemble & test	ea	1	500.00	eu	0.5	2	40.0	80	MU	35.92	2.9	3.4
2	Bakeout & UHV qualify	ea	1	500.00	eu	0.5	2	40.0	80	MU	35.92	2.9	3.4
3	Survey & calibrate		0	0.00		0.0	2	16.0	32	MU	35.92	1.1	1.1
4	Misc tools, fixtures,cart	lot	1	500.00	eu8	0.5	1	40.0	40	MS	37.73	1.5	2.0
** Subtotal **						1.5			232			8.4	9.9
** WBS: 1.2.4.2.3.5.1.8	Install and Align												
1	LCW hardware & cnnections	lot	1	300.00	eu8	0.3	1	16.0	16	MU	35.92	0.6	0.9
2	Transport & onsite setup	ea	1	200.00	eu	0.2	2	16.0	32	MU	35.92	1.1	1.3
3	Vac assmble & leak check	ea	1	50.00	eu8	0.1	2	20.0	40	MU	35.92	1.4	1.5
4	Installation alignment		0	0.00		0.0	2	32.0	64	MU	35.92	2.3	2.3
5	Mech install/test/debug	lot	1	500.00	eu	0.5	2	20.0	40	MU	35.92	1.4	1.9
6	Elec installation		0	0.00		0.0	1	20.0	20	IEL	62.85	1.3	1.3
** Subtotal **						1.1			212			8.2	9.2
** WBS: 1.2.4.2.3.5.2.1	Bellows												
1	Welded bellows assy	ea	2	2500.00	A91	5.0	2	4.0	8	MS	37.73	0.3	5.3
2	Blank flanges & gaskets	lot	2	300.00	cp	0.6	0	0.0	0		0.00	0.0	0.6
3	Inspect,clean,bakeout	ea	2	50.00	eu	0.1	2	4.0	8	MU	35.92	0.3	0.4
** Subtotal **						5.7			16			0.6	6.3
** WBS: 1.2.4.2.3.5.2.2	Gratings												
1	Brazed substrate parts	ea	3	3500.00	A91	10.5	0	0.0	0		0.00	0.0	10.5
2	Substrate brazing,welding	ea	3	200.00	A91	0.6	3	20.0	60	MU	35.92	2.2	2.8

Technical Components Cost Estimate

ITM NBR	ITM DESCRIPTION	UNIT MEAS	NBR UNITS	UNIT COST	COST BASIS	TOTAL ISC K$	LBR UNTS	HRS/ UNIT	TOTAL HRS	CRAFT CODE	CRAFT RATE	TOTAL LABOR K$	ISC + LABOR K$
3	Misc leak & flow tests	ea	3	100.00	A91	0.3	3	8.0	24	MU	35.92	0.9	1.2
4	Polishing	ea	3	20000.00	A91	60.0	0	0.0	0		0.00	0.0	60.0
5	Ruling	ea	3	15000.00	eu	45.0	0	0.0	0		0.00	0.0	45.0
6	Optical coatings	ea	3	1000.00	eu	3.0	0	0.0	0		0.00	0.0	3.0
7	Shipping & handling	ea	3	200.00	eu	0.6	4	4.0	16	MU	35.92	0.6	1.2
** Subtotal **						120.0			100			3.6	123.6
** WBS: 1.2.4.2.3.5.2.3	Grating Mechanical Assembly												
1	Invac mounting hardware	ea	1	20000.00	eu	20.0	1	800.0	800	MS	37.73	30.2	50.2
2	Scan drive mechanism	ea	1	5000.00	eu	5.0	1	200.0	200	MS	37.73	7.5	12.5
3	Slide	ea	1	20000.00	A87	20.0	0	0.0	0		0.00	0.0	20.0
4	Grating intrchnge actuatr	ea	1	2000.00	A87	2.0	1	80.0	80	MS	37.73	3.0	5.0
5	Alignmnt manipulator	ea	1	2000.00	A87	2.0	1	80.0	80	MS	37.73	3.0	5.0
** Subtotal **						49.0			1160			43.8	92.8
** WBS: 1.2.4.2.3.5.2.4	Mask & VBDA												
1	Blade mechanism	ea	2	1000.00	eu	2.0	2	80.0	160	MS	37.73	6.0	8.0
2	Vacuum housing	ea	1	2000.00	eu	2.0	0	0.0	0		0.00	0.0	2.0
3	Manual actuator/micometer	ea	2	1500.00	eu	3.0	2	20.0	40	MS	37.73	1.5	4.5
4	LCW hardware	ea	1	500.00	cp	0.5	1	20.0	20	MS	37.73	0.8	1.3
5	Misc parts & tools	lot	1	1000.00	eu	1.0	1	40.0	40	MS	37.73	1.5	2.5
** Subtotal **						8.5			260			9.8	18.3
** WBS: 1.2.4.2.3.5.2.5	Electrical & Controls												
1	Scan drive electronics	ea	1	40000.00	A87	40.0	0	0.0	0		0.00	0.0	40.0
2	Interferometer positionng	ea	1	25000.00	A87	25.0	0	0.0	0		0.00	0.0	25.0
3	Glow dschrge optcl cleang	ea	1	10000.00	eu	10.0	1	16.0	16	EI	33.00	0.5	10.5
** Subtotal **						75.0			16			0.5	75.5
** WBS: 1.2.4.2.3.5.2.6	Vacuum System												
1	Ion pump 400 l/s	ea	1	7500.00	A91	7.5	1	4.0	4	MU	35.92	0.1	7.6
2	Ion pump heater	ea	1	1000.00	A91	1.0	1	4.0	4	EI	33.00	0.1	1.1
3	Ion pump controller	ea	1	2500.00	A91	2.5	1	4.0	4	EI	33.00	0.1	2.6
4	Ion pump cable,bakeable	ea	1	250.00	A91	0.2	0	0.0	0		0.00	0.0	0.2
5	IEEE-48 cable, 3 meter	ea	1	150.00	cp	0.1	0	0.0	0		0.00	0.0	0.1
6	Roughing valve	ea	2	650.00	A91	1.3	0	0.0	0		0.00	0.0	1.3
7	Ion gauge & controls	ea	1	3500.00	A91	3.5	1	4.0	4	MU	35.92	0.1	3.6
8	Ion gauge cable,bakeable	ea	1	250.00	cp	0.2	1	4.0	4	EI	33.00	0.1	0.4
9	Junction box, IG cable	ea	1	200.00	eu	0.2	1	4.0	4	EI	33.00	0.1	0.3
10	Interlock cable	ea	1	100.00	eu	0.1	0	0.0	0		0.00	0.0	0.1
11	TSP pump spool piece	ea	1	3000.00	A91	3.0	0	0.0	0		0.00	0.0	3.0
12	TSP filaments/controller	ea	1	3500.00	eu	3.5	1	8.0	8	EI	33.00	0.3	3.8
13	Flanges & UHV hardware	lot	1	500.00	eu	0.5	0	0.0	0		0.00	0.0	0.5
14	Support stand misc hardwr	ea	1	500.00	eu	0.5	1	20.0	20	MS	37.73	0.8	1.3
15	Pump welded bellws assy	ea	1	2500.00	A91	2.5	0	0.0	0		0.00	0.0	2.5
16	Bellows inspect,clean,bak	ea	1	50.00	eu	0.1	1	4.0	4	MU	35.92	0.1	0.2
17	Misc extrusions,mounting	lot	1	1000.00	eu	1.0	1	20.0	20	MS	37.73	0.8	1.8
** Subtotal **						27.8			76			2.7	30.5
** WBS: 1.2.4.2.3.5.2.7	Support Systems												
1	Grating chamber	ea	1	40000.00	A88	40.0	1	800.0	800	MS	37.73	30.2	70.2
2	Struts & mounting hardwre	ea	6	1000.00	eu	6.0	6	8.0	48	MS	37.73	1.8	7.8
3	Support stand & hardware	ea	1	2000.00	eu	2.0	1	80.0	80	MS	37.73	3.0	5.0
4	Misc blank-off flanges	lot	8	500.00	cp	4.0	0	0.0	0		0.00	0.0	4.0
5	Misc UHV tools,parts,etc	lot	1	2500.00	eu	2.5	1	40.0	40	MS	37.73	1.5	4.0
** Subtotal **						54.5			968			36.5	91.0
** WBS: 1.2.4.2.3.5.2.8	Assemble & Test												
1	Assemble grating BDA	ea	1	500.00	eu	0.5	2	80.0	160	MS	37.73	6.0	6.5
2	Assemble grating mounting	ea	1	500.00	A88	0.5	2	80.0	160	MS	37.73	6.0	6.5

Technical Components Cost Estimate

ITM NBR	ITM DESCRIPTION	UNIT MEAS	NBR UNITS	UNIT COST	COST BASIS	TOTAL ISC K$	LBR UNTS	HRS/ UNIT	TOTAL HRS	CRAFT CODE	CRAFT RATE	TOTAL LABOR K$	ISC LABOR K$
3	Assemble drive mechanism	ea	1	500.00	A88	0.5	2	80.0	160	MS	37.73	6.0	6.5
4	Assemble grating chamber	ea	1	500.00	A88	0.5	2	80.0	160	MS	37.73	6.0	6.5
5	Bakeout & UHV qualify	ea	1	500.00	eu	0.5	2	80.0	160	MU	35.92	5.7	6.2
6	Survey/calibration		0	0.00		0.0	2	16.0	32	MU	35.92	1.1	1.1
7	Misc tools,fixtures,cart	lot	1	1000.00	eu	1.0	1	40.0	40	MS	37.73	1.5	2.5
** Subtotal **						3.5			872			32.6	36.1
** WBS: 1.2.4.2.3.5.2.9	Install & Align												
1	LCW hardware & connctions	ea	1	300.00	eu	0.3	1	16.0	16	MU	35.92	0.6	0.9
2	Transport & onsite setup	ea	1	500.00	eu	0.5	2	40.0	80	MU	35.92	2.9	3.4
3	Vac assemble & leakcheck	ea	1	50.00	eu	0.1	2	40.0	80	MU	35.92	2.9	2.9
4	Installation alignment		0	0.00		0.0	2	40.0	80	MU	35.92	2.9	2.9
5	Mech install,test,debug	ea	1	500.00	eu	0.5	2	40.0	80	MU	35.92	2.9	3.4
6	Electrical installation		0	0.00		0.0	1	40.0	40	IEL	62.85	2.5	2.5
** Subtotal **						1.4			376			14.6	15.9
** WBS: 1.2.4.2.3.5.3.1	Bellows												
1	Welded bellows assy	ea	2	8000.00	A86	16.0	2	4.0	8	MS	37.73	0.3	16.3
2	Inspection,cleaning,bake	ea	2	50.00	eu	0.1	2	4.0	8	MU	35.92	0.3	0.4
3	Anti-sag supports	ea	2	1000.00	eu	2.0	2	60.0	120	MS	37.73	4.5	6.5
** Subtotal **						18.1			136			5.1	23.2
** WBS: 1.2.4.2.3.5.3.2	Isolation Valves												
1	Valve & controller proc.	ea	2	10000.00	vq	20.0	0	0.0	0		0.00	0.0	20.0
2	Prelim assemble & test	lot	2	50.00	eu	0.1	2	8.0	16	MU	35.92	0.6	0.7
3	Inspection, clean,bake	lot	2	50.00	eu	0.1	2	4.0	8	MU	35.92	0.3	0.4
4	Cables & connectors	lot	2	200.00	eu	0.4	2	2.0	4	EI	33.00	0.1	0.5
5	Blank flanges & hardware	lot	4	200.00	eu	0.8	0	0.0	0		0.00	0.0	0.8
** Subtotal **						21.4			28			1.0	22.4
** WBS: 1.2.4.2.3.5.3.3	Vacuum System												
1	Ion pump 60 l/s	ea	1	2700.00	A91	2.7	1	4.0	4	MU	35.92	0.1	2.8
2	Ion pump controller	ea	1	1600.00	A91	1.6	1	4.0	4	EI	33.00	0.1	1.7
3	Ion pump cable,bakeable	ea	1	250.00	A91	0.2	0	0.0	0		0.00	0.0	0.2
4	IEEE-48 cable, 3 m	ea	1	150.00	cp	0.1	0	0.0	0		0.00	0.0	0.1
5	Roughing valve	ea	2	650.00	A91	1.3	0	0.0	0		0.00	0.0	1.3
6	Ion gauge & controls	ea	1	3500.00	A91	3.5	1	4.0	4	MU	35.92	0.1	3.6
7	Ion gauge cable, bakeable	ea	1	250.00	cp	0.2	1	4.0	4	EI	33.00	0.1	0.4
8	Junction box, IG cable	ea	1	200.00	eu	0.2	1	4.0	4	EI	33.00	0.1	0.3
9	Interlock cable	ea	1	100.00	eu	0.1	0	0.0	0		0.00	0.0	0.1
10	Spool pieces	ea	3	2000.00	eu	6.0	0	0.0	0		0.00	0.0	6.0
** Subtotal **						16.0			20			0.7	16.7
** WBS: 1.2.4.2.3.5.3.4	Slit Mechanical Assembly												
1	Flanges & flexure plate	ea	1	1000.00	eu	1.0	1	80.0	80	MS	37.73	3.0	4.0
2	CF feed-thrus for elctncs	ea	4	200.00	eu	0.8	0	0.0	0		0.00	0.0	0.8
3	Viewports & mirrors	ea	2	200.00	eu	0.4	2	8.0	16	MS	37.73	0.6	1.0
4	Brazing & fixtures	ea	1	100.00	eu	0.1	1	20.0	20	MU	35.92	0.7	0.8
5	Feedthrus welding	ea	1	50.00	eu	0.1	1	8.0	8	MS	37.73	0.3	0.4
6	Blades fab/buy	ea	2	200.00	eu	0.4	2	20.0	40	MS	37.73	1.5	1.9
8	LCW hardware	ea	1	100.00	eu	0.1	1	8.0	8	MU	35.92	0.3	0.4
9	Micrometer mechanism	ea	1	1000.00	eu	1.0	1	20.0	20	MS	37.73	0.8	1.8
10	Outside vac mnting hardwr	ea	1	500.00	eu	0.5	1	20.0	20	MS	37.73	0.8	1.3
11	Blade alignment fixtures	lot	1	200.00	eu	0.2	1	20.0	20	MS	37.73	0.8	1.0
12	Exit slit motion system	ea	1	60000.00	A87	60.0	0	0.0	0		0.00	0.0	60.0
** Subtotal **						64.5			232			8.7	73.3
** WBS: 1.2.4.2.3.5.3.5	Support Systems												
1	Slit assy mounting hardwr	ea	6	1000.00	eu	6.0	6	8.0	48	MS	37.73	1.8	7.8
2	Support post & hardware	ea	1	1000.00	eu	1.0	1	40.0	40	MS	37.73	1.5	2.5

Technical Components Cost Estimate

ITM NBR	ITM DESCRIPTION	UNIT MEAS	NBR UNITS	UNIT COST COST BASIS	TOTAL ISC K$	LBR UNTS	HRS/ UNIT	TOTAL HRS	CRAFT CODE	CRAFT RATE	TOTAL LABOR K$	ISC + LABOR K$
** Subtotal **					7.0			88			3.3	10.3
** WBS: 1.2.4.2.3.5.3.6	Assemble & Test											
1	Assemble & test	ea	1	500.00 eu	0.5	1	120.0	120	MU	35.92	4.3	4.8
2	Bakeout & UHV qualify	ea	1	500.00 eu	0.5	1	120.0	120	MU	35.92	4.3	4.8
3	Survey/calibration		0	0.00	0.0	2	16.0	32	MU	35.92	1.1	1.1
4	Misc tools,fixtures,cart	lot	1	500.00 eu	0.5	1	40.0	40	MS	37.73	1.5	2.0
** Subtotal **					1.5			312			11.3	12.8
** WBS: 1.2.4.2.3.5.3.7	Install & Align											
1	Transport & onsite setup	lot	1	200.00 eu	0.2	2	16.0	32	MU	35.92	1.1	1.3
2	Vac assmble & leakcheck	ea	1	50.00 eu	0.1	2	20.0	40	MU	35.92	1.4	1.5
3	Installation alignment		0	0.00	0.0	2	32.0	64	MU	35.92	2.3	2.3
4	Mech install,test,debug	ea	1	500.00 eu	0.5	2	20.0	40	MU	35.92	1.4	1.9
5	Electrical installation		0	0.00	0.0	1	20.0	20	IEL	62.85	1.3	1.3
** Subtotal **					0.8			196			7.6	8.3
** WBS: 1.2.4.2.3.8.1	Fab/Buy Mech Parts & Subassy's											
1	Linear device mech	ea	1	4000.00 cp	4.0	0	0.0	0		0.00	0.0	4.0
2	Mods for water cooling	ea	1	200.00 eu	0.2	1	20.0	20	MS	37.73	0.8	1.0
3	In-vac part fab.	ea	1	1000.00 eu	1.0	1	80.0	80	MS	37.73	3.0	4.0
4	Brazing & welding assy	ea	1	200.00 A91	0.2	1	20.0	20	MS	37.73	0.8	1.0
5	Detector,feedthru,phosphr	ea	1	500.00 eu	0.5	1	40.0	40	MS	37.73	1.5	2.0
** Subtotal **					5.9			160			6.0	11.9
** WBS: 1.2.4.2.3.8.3	Fab/Buy Vacuum Chamber & Supports											
1	Spool piece	ea	2	2000.00 eu	4.0	0	0.0	0		0.00	0.0	4.0
2	Struts & Mounting hardwar	ea	6	500.00 eu	3.0	6	8.0	48	MS	37.73	1.8	4.8
3	Support post & hardware	ea	1	300.00 eu	0.3	1	20.0	20	MS	37.73	0.8	1.1
4	Misc flanges & feedthrus	lot	1	2000.00 eu	2.0	1	20.0	20	MS	37.73	0.8	2.8
** Subtotal **					9.3			88			3.3	12.6
** WBS: 1.2.4.2.3.8.4	Vacuum Pumping, Gauges, Controllers, P.S.											
1	Ion pump, 60l/s	ea	1	2700.00 A91	2.7	1	4.0	4	MU	35.92	0.1	2.8
2	Ion pump controller	ea	1	1600.00 A91	1.6	1	4.0	4	EI	33.00	0.1	1.7
3	Ion pump cable, bakeable	ea	1	250.00 A91	0.2	0	0.0	0		0.00	0.0	0.2
4	IEEE-488 cable, 3m	ea	1	150.00 cp	0.1	0	0.0	0		0.00	0.0	0.1
5	Roughing valve	ea	2	650.00 A91	1.3	0	0.0	0		0.00	0.0	1.3
6	Ion gauge & contrls	ea	1	3500.00 A91	3.5	1	4.0	4	MU	35.92	0.1	3.6
7	Ion gauge cable, bakeable	ea	1	250.00 cp	0.2	1	4.0	4	EI	33.00	0.1	0.4
8	Junction box, IG cable	ea	1	200.00 eu	0.2	1	4.0	4	EI	33.00	0.1	0.3
9	Interlock cable	ea	1	100.00 eu	0.1	0	0.0	0		0.00	0.0	0.1
** Subtotal **					10.0			20			0.7	10.7
** WBS: 1.2.4.2.3.8.5	Assemble, Bakeout, Test											
1	Assemble & test	ea	2	500.00 eu	1.0	2	20.0	40	MS	37.73	1.5	2.5
2	Bakeout & UHV qualify	ea	2	500.00 eu	1.0	2	40.0	80	MS	37.73	3.0	4.0
3	Survey/calibration		0	0.00	0.0	2	16.0	32	MS	37.73	1.2	1.2
** Subtotal **					2.0			152			5.7	7.7
** WBS: 1.2.4.2.3.8.6	Installation											
1	Transport & on-site setup		0	0.00	0.0	2	4.0	8	MU	35.92	0.3	0.3
2	Vac assemble & leak check	ea	1	100.00 eu	0.1	2	20.0	40	MU	35.92	1.4	1.5
3	Mech install/test/debug	ea	1	100.00 eu	0.1	2	20.0	40	MU	35.92	1.4	1.5
** Subtotal **					0.2			88			3.2	3.4
* WBS: 1.2.4.2.3.9.1	Fab/Buy Mech Parts & Subassy's											
1	Misc machine shop effort	lot	1	1000.00 eu	1.0	1	40.0	40	MS	37.73	1.5	2.5

Technical Components Cost Estimate

ITM NBR	ITM DESCRIPTION	UNIT MEAS	NBR UNITS	UNIT COST	COST BASIS	TOTAL ISC K$	LBR UNTS	HRS/ UNIT	TOTAL HRS	CRAFT CODE	CRAFT RATE	TOTAL LABOR K$	ISC LABOR K$
2	Misc mech tech & tools	lot	1	1000.00	eu	1.0	1	40.0	40	MU	35.92	1.4	2.4
** Subtotal **						2.0			80			2.9	4.9
** WBS: 1.2.4.2.3.9.2	Fab/Buy Electrical and Controls												
1	Cables,valve actuation &	lot	3	100.00	eu	0.3	3	4.0	12	EI	33.00	0.4	0.7
2	X-connect blocks & frame	ea	1	500.00	eu	0.5	1	24.0	24	EI	33.00	0.8	1.3
3	Relays blocks & frame	ea	1	570.00	cp	0.6	1	24.0	24	EI	33.00	0.8	1.4
4	48 channel opto-isolators	ea	1	700.00	cp	0.7	1	24.0	24	EI	33.00	0.8	1.5
5	Cable trays, conduit, etc	lot	1	2000.00	eu	2.0	1	120.0	120	IEL	62.85	7.5	9.5
6	Double elec. rack	ea	1	1300.00	cp	1.3	1	16.0	16	EI	33.00	0.5	1.8
7	BA panel 3 ph 30A	ea	1	50.00	eu	0.1	1	16.0	16	EI	33.00	0.5	0.6
8	Breaker panel	ea	2	200.00	eu	0.4	2	2.0	4	EI	33.00	0.1	0.5
9	Plug strip	ea	2	20.00	eu	0.0	2	1.0	2	EI	33.00	0.1	0.1
10	Rack fans	ea	2	50.00	eu	0.1	2	2.0	4	EI	33.00	0.1	0.2
11	Misc. hardware	lot	1	1000.00	eu	1.0	1	40.0	40	EI	33.00	1.3	2.3
12	Programmabl logic cntrllr	ea	1	8000.00	eu	8.0	1	40.0	40	CP	59.40	2.4	10.4
13	PLC Cabling	ea	1	500.00	eu	0.5	1	20.0	20	EI	33.00	0.7	1.2
14	Operator Console	ea	1	8000.00	eu	8.0	0	0.0	0		0.00	0.0	8.0
15	Branch line device server		0	0.00		0.0	0	0.0	0		0.00	0.0	0.0
16	VME crate w/power spply	ea	1	3000.00	cp	3.0	1	0.0	0		0.00	0.0	3.0
17	VME processor	ea	1	3500.00	cp	3.5	0	40.0	0	CP	59.40	0.0	3.5
18	IEEE-48 module	ea	1	800.00	cp	0.8	0	0.0	0		0.00	0.0	0.8
19	Real time O/S	ea	1	500.00	cp	0.5	0	0.0	0		0.00	0.0	0.5
20	Network interface		0	0.00		0.0	0	0.0	0		0.00	0.0	0.0
21	Ethernet router	ea	1	2000.00	eu	2.0	1	15.0	15	EI	33.00	0.5	2.5
22	Ethernet distribution	ea	1	2000.00	eu	2.0	0	0.0	0		0.00	0.0	2.0
23	Cables, thicknet	ea	5	200.00	eu	1.0	0	0.0	0		0.00	0.0	1.0
24	Display/control station		0	0.00		0.0	0	0.0	0		0.00	0.0	0.0
26	Display software	ea	1	3000.00	eu	3.0	0	0.0	0		0.00	0.0	3.0
27	TV display controls		0	0.00		0.0	0	0.0	0		0.00	0.0	0.0
28	TV monitor	ea	1	500.00	eu	0.5	0	0.0	0		0.00	0.0	0.5
29	TV patch panel	ea	1	200.00	eu	0.2	1	20.0	20	EI	33.00	0.7	0.9
30	TV scanner	ea	1	1000.00	eu	1.0	0	0.0	0		0.00	0.0	1.0
31	TV camera	ea	6	500.00	eu	3.0	0	0.0	0		0.00	0.0	3.0
32	Cabling, patch	ea	6	20.00	eu	0.1	0	0.0	0		0.00	0.0	0.1
33	24VDC power distribution		0	0.00		0.0	0	0.0	0		0.00	0.0	0.0
34	24VDC power supply	ea	1	2000.00	eu	2.0	1	20.0	20	EI	33.00	0.7	2.7
35	24VDC distribution	ea	1	2000.00	eu	2.0	1	40.0	40	EI	33.00	1.3	3.3
** Subtotal **						48.1			441			19.2	67.3
** WBS: 1.2.4.2.3.9.3	Fab/Buy Vacuum Chamber & Supports												
1	Misc flanges,viewprts,etc	lot	1	3000.00	eu	3.0	0	0.0	0		0.00	0.0	3.0
2	Roughing valve	ea	4	650.00	cp	2.6	0	0.0	0		0.00	0.0	2.6
3	Misc. unistrut/hardware	lot	1	500.00	eu	0.5	1	40.0	40	MU	35.92	1.4	1.9
** Subtotal **						6.1			40			1.4	7.5
** WBS: 1.2.4.2.3.9.5	Assemble, Bakeout, Test												
1	Misc assemble & test	ea	1	1000.00	eu	1.0	2	80.0	160	MU	35.92	5.7	6.7
2	Misc bakeout/UHV qualify	lot	1	1000.00	eu	1.0	2	80.0	160	MU	35.92	5.7	6.7
3	Survey/calibration		0	0.00		0.0	3	32.0	96	MU	35.92	3.4	3.4
** Subtotal **						2.0			416			14.9	16.9
** WBS: 1.2.4.2.3.9.6	Installation												
1	Transport & on-site setup	lot	1	100.00	eu	0.1	2	40.0	80	MU	35.92	2.9	3.0
2	Vac assmble & leak checks	lot	1	500.00	eu	0.5	2	40.0	80	MU	35.92	2.9	3.4
4	Lead shielding installatn	lot	1	200.00	eu	0.2	1	40.0	40	MU	35.92	1.4	1.6
5	Installation alignment		0	0.00		0.0	3	32.0	96	MU	35.92	3.4	3.4
6	Pneumatic service	ea	1	1000.00	eu	1.0	1	40.0	40	MU	35.92	1.4	2.4
7	LCW service	lot	1	1000.00	eu	1.0	1	40.0	40	MU	35.92	1.4	2.4
8	Mech install/test/debug	lot	1	100.00	eu	0.1	2	40.0	80	MU	35.92	2.9	3.0
9	Elec installation		0	0.00		0.0	1	40.0	40	IEL	62.85	2.5	2.5
10			0	0.00		0.0	1	40.0	40	EI	33.00	1.3	1.3

Technical Components Cost Estimate

ITM NBR	ITM DESCRIPTION	UNIT MEAS	NBR UNITS	UNIT COST	COST BASIS	TOTAL ISC K$	LBR UNTS	HRS/ UNIT	TOTAL HRS	CRAFT CODE	CRAFT RATE	TOTAL LABOR K$	ISC + LABOR K$
** Subtotal **						2.9			536			20.2	23.1
** WBS: 1.2.4.2.3.10	Branch Line Safety Systems												
1	ILC & SBX	ea	2	1500.00	eu	3.0	0	0.0	0		0.00	0.0	3.0
2	Eurocard crate	ea	1	1000.00	eu	1.0	0	0.0	0		0.00	0.0	1.0
3	Key panel	ea	1	300.00	cp	0.3	0	0.0	0		0.00	0.0	0.3
4	Monitor lights panel	ea	6	250.00	cp	1.5	0	0.0	0		0.00	0.0	1.5
5	Push button panel	ea	1	250.00	eu	0.2	0	0.0	0		0.00	0.0	0.2
6	Breaker panel	ea	1	250.00	eu	0.2	0	0.0	0		0.00	0.0	0.2
7	Cables	lot	1	100.00	eu	0.1	0	0.0	0		0.00	0.0	0.1
8	Wiring assembly		0	0.00		0.0	1	80.0	80	EI	33.00	2.6	2.6
9	Misc hardware & locks	lot	1	1000.00	eu	1.0	0	0.0	0		0.00	0.0	1.0
10	Elec installation		0	0.00		0.0	1	40.0	40	IEL	62.85	2.5	2.5
** Subtotal **						7.4			120			5.2	12.6
** WBS: 1.2.4.2.4.1.1	H&V Beam Defining Apertures												
1	Vacuum Chamber	ea	1	12000.00	A87	12.0	0	0.0	0		0.00	0.0	12.0
2	Roughing Valve	ea	1	750.00	cp	0.8	0	0.0	0		0.00	0.0	0.8
3	Tank Support Posts	ea	1	1000.00	eu	1.0	0	0.0	0		0.00	0.0	1.0
4	Tank Mounting Struts	ea	6	200.00	eu	1.2	6	20.0	120	MS	37.73	4.5	5.7
5	Brazed Absorber Assy	ea	4	500.00	eu	2.0	4	100.0	400	MS	37.73	15.1	17.1
6	Brazing & Tooling Fixturs	ea	1	100.00	eu	0.1	2	40.0	80	MS	37.73	3.0	3.1
7	UHV Mounting Hardware	lot	4	500.00	eu	2.0	4	20.0	80	MS	37.73	3.0	5.0
8	Bellows Assembly	ea	4	2000.00	eu	8.0	0	0.0	0		0.00	0.0	8.0
9	Stepper/Encoder Positione	ea	4	2500.00	eu	10.0	0	0.0	0		0.00	0.0	10.0
10	Flanges/misc UHV hardware	lot	10	500.00	eu	5.0	0	0.0	0		0.00	0.0	5.0
11	LCW Hardware	ea	2	300.00	eu	0.6	0	0.0	0		0.00	0.0	0.6
12	Assemble UHV subsystems	ea	4	100.00	eu	0.4	4	20.0	80	MS	37.73	3.0	3.4
13	Survey & Calibration		0	0.00		0.0	4	16.0	64	MS	37.73	2.4	2.4
14	Pumpdown & leakcheck	lot	1	50.00	eu	0.1	1	40.0	40	MS	37.73	1.5	1.6
15	Bakout	lot	1	50.00	eu	0.1	1	80.0	80	MS	37.73	3.0	3.1
16	Assemble Positioners	ea	4	50.00	eu	0.2	4	20.0	80	MS	37.73	3.0	3.2
17	Misc. Assembly Hardware	lot	1	1000.00	eu	1.0	1	40.0	40	MS	37.73	1.5	2.5
18	Pre-installation checkout		0	0.00		0.0	1	40.0	40	MS	37.73	1.5	1.5
19	Prep for transportation	lot	1	50.00	eu	0.1	1	8.0	8	MS	37.73	0.3	0.4
** Subtotal **						44.4			1112			42.0	86.4
** WBS: 1.2.4.2.4.1.2	Vertical Deflection Mirrors												
1	Procurement	lot	2	56000.00	eu	112.0	2	60.0	120	MS	37.73	4.5	116.5
2	Fabrication	lot	2	9900.00	eu	19.8	2	1220.0	2440	MS	37.73	92.1	111.9
3	Assemble & Test	lot	2	650.00	eu	1.3	2	292.0	584	MS	37.73	22.0	23.3
4	Installation	lot	2	50.00	eu	0.1	2	8.0	16	MS	37.73	0.6	0.7
** Subtotal **						133.2			3160			119.2	252.4
** WBS: 1.2.4.2.4.1.3	Monochromator												
1	Monochromator	ea	1	365000.00	eu	365.0	0	0.0	0		0.00	0.0	365.0
** Subtotal **						365.0			0			0.0	365.0
** WBS: 1.2.4.2.4.1.4	Beam Line Diagnostics												
1	Diagnostic #1	ea	1	7700.00	eu	7.7	1	208.0	208	MS	37.73	7.8	15.5
2	Diagnostic #2	ea	1	6700.00	eu	6.7	1	148.0	148	MS	37.73	5.6	12.3
3	Diagnostic #3	ea	1	6700.00	eu	6.7	1	148.0	148	MS	37.73	5.6	12.3
** Subtotal **						21.1			504			19.0	40.1
** WBS: 1.2.4.2.4.1.5	Branch Line Vacuum System												
1	4" UHV Isolation Valve	ea	4	9460.00	cp	37.8	0	0.0	0		0.00	0.0	37.8
2	6"cf Spools	ea	4	500.00	cp	2.0	0	0.0	0		0.00	0.0	2.0
3	6"cf Bellows Assembly	ea	6	2000.00	A86	12.0	0	0.0	0		0.00	0.0	12.0
4	Spool Support Posts	ea	4	500.00	eu	2.0	0	0.0	0		0.00	0.0	2.0
5	Misc UHV Hardware	lot	1	2500.00	eu	2.5	1	120.0	120	MS	37.73	4.5	7.0

Technical Components Cost Estimate

ITM NBR	ITM DESCRIPTION	UNIT MEAS	NBR UNITS	UNIT COST	COST BASIS	TOTAL ISC K$	LBR UNTS	HRS/ UNIT	TOTAL HRS	CRAFT CODE	CRAFT RATE	TOTAL LABOR K$	ISC LABOR K$
6	Bakeout & Leak check	lot	1	2500.00	eu	2.5	1	120.0	120	MS	37.73	4.5	7.0
** Subtotal **						58.8			240			9.1	67.9
** WBS: 1.2.4.2.4.1.6	Branch Line Mechanical Installation												
1	Assemble/Leak check	lot	1	1.00	1000	0.0	1	120.0	120	MS	37.73	4.5	4.5
2	Transport & setup	lot	3	200.00	eu	0.6	3	32.0	96	MU	35.92	3.4	4.0
3	Unitstrut & Misc. Hardwar	lot	1	500.00	eu	0.5	1	80.0	80	MU	35.92	2.9	3.4
4	Misc. Mechanical work	lot	1	500.00	eu	0.5	1	40.0	40	MS	37.73	1.5	2.0
5	Misc. Machine shop	lot	1	500.00	eu	0.5	1	40.0	40	MS	37.73	1.5	2.0
6	Lead Shieldng Installatn	lot	1	1000.00	eu	1.0	1	40.0	40	MU	35.92	1.4	2.4
7	Support Rail	ea	1	500.00	eu	0.5	1	120.0	120	MS	37.73	4.5	5.0
8	Survey & Alignment	lot	1	200.00	eu	0.2	1	131.0	131	MS	37.73	4.9	5.1
** Subtotal **						3.8			667			24.8	28.6
** WBS: 1.2.4.2.4.1.7	Defining Slits												
1	Defining Slits	ea	2	45000.00	eu	90.0	0	0.0	0		0.00	0.0	90.0
** Subtotal **						90.0			0			0.0	90.0
** WBS: 1.2.4.2.4.2.1	Photon Transport Controls & Diagnostics												
1	Ion Pump Controls/Cables	lot	1	53600.00	CP	53.6	4	8.0	32	EI	33.00	1.1	54.7
2	Ion Gauges/Controls	lot	1	12700.00	eu	12.7	8	8.0	64	EI	33.00	2.1	14.8
3	Interlocks & Actuators	lot	1	5400.00	eu	5.4	14	2.0	28	EI	33.00	0.9	6.3
4	Positioning Controls	lot	1	22800.00	eu	22.8	8	8.0	64	EI	33.00	2.1	24.9
5	Optical Cleaning Controls	lot	1	10000.00	eu	10.0	1	20.0	20	EI	33.00	0.7	10.7
6	Beam Positioning Controls	ea	1	2100.00	eu	2.1	1	10.0	10	EI	33.00	0.3	2.4
7	Misc. Hardware	lot	1	5000.00	eu	5.0	1	40.0	40	ES	33.00	1.3	6.3
** Subtotal **						111.6			258			8.5	120.1
** WBS: 1.2.4.2.4.2.2	Monochromator Controls												
1	Progrmmabl Logic Cntrllr	lot	1	8500.00	eu	8.5	1	20.0	20	EI	33.00	0.7	9.2
2			0	0.00		0.0	1	40.0	40	CP	59.40	2.4	2.4
3	Branch Line Device Server	ea	1	7800.00	cp	7.8	1	40.0	40	CP	59.40	2.4	10.2
4	Network Interface	lot	1	5000.00	eu	5.0	1	10.0	10	EI	33.00	0.3	5.3
5	Display/Control Station	ea	1	13000.00	eu	13.0	1	40.0	40	CP	59.40	2.4	15.4
6	TV Display Controls	ea	1	5900.00	eu	5.9	1	20.0	20	EI	33.00	0.7	6.6
7	24VDC Distribution	lot	1	4000.00	eu	4.0	1	60.0	60	ES	33.00	2.0	6.0
** Subtotal **						44.2			230			10.8	55.0
** WBS: 1.2.4.2.4.2.3	Branch Line Electrical Installation												
1	Racks & Trays	lot	1	3450.00	CP	3.5	1	80.0	80	EI	33.00	2.6	6.1
2	Ion Pump Interconnects	ft	600	1.00	eu	0.6	1	16.0	16	EI	33.00	0.5	1.1
3	Ion Gauge Interconnect	ft	600	2.00	eu	1.2	1	32.0	32	EI	33.00	1.1	2.3
4	Intrlck/Actuatr Intrcnnct	ft	400	3.00	eu	1.2	1	40.0	40	EI	33.00	1.3	2.5
5	Position Contrls Intrcnnc	ft	800	2.50	eu	2.0	1	40.0	40	EI	33.00	1.3	3.3
6	Optical Cleaning Intrcnnc	ft	200	1.00	eu	0.2	1	10.0	10	EI	33.00	0.3	0.5
** Subtotal **						8.6			218			7.2	15.8
** WBS: 1.2.4.2.4.3	Branch Line Safety Systems												
1	ILC & SBX	ea	1	1400.00	eu	1.4	0	0.0	0		0.00	0.0	1.4
2	Eurocard Crate	ea	1	800.00	eu	0.8	0	0.0	0		0.00	0.0	0.8
3	Key Panel	ea	1	300.00	cp	0.3	0	0.0	0		0.00	0.0	0.3
4	Monitor Lights Panel	ea	6	250.00	cp	1.5	0	0.0	0		0.00	0.0	1.5
5	Push Button Panel	ea	1	250.00	cp	0.2	0	0.0	0		0.00	0.0	0.2
6	Breaker Panel	ea	1	250.00	cp	0.2	0	0.0	0		0.00	0.0	0.2
7	Cables	lot	1	100.00	eu	0.1	0	0.0	0		0.00	0.0	0.1
8	Wiring Assembly		0	0.00		0.0	1	80.0	80	ES	33.00	2.6	2.6
9	Systems Test		0	0.00		0.0	1	80.0	80	EM	33.00	2.6	2.6
10	Padlocks & Misc. Hardware	lot	1	500.00	eu	0.5	0	0.0	0		0.00	0.0	0.5

Technical Components Cost Estimate

ITM NBR	ITM DESCRIPTION	UNIT MEAS	NBR UNITS	UNIT COST	COST BASIS	TOTAL ISC K$	LBR UNTS	HRS/ UNIT	TOTAL HRS	CRAFT CODE	CRAFT RATE	TOTAL LABOR K$	ISC + LABOR K$
** Subtotal **						5.1			160			5.3	10.4
** WBS: 1.2.4.2.4.4	Branch Line Utilities												
1	Pneumatic Service	lot	1	1500.00	eu	1.5	1	120.0	120	MU	35.92	4.3	5.8
2	LCW Service	lot	1	1500.00	eu	1.5	1	120.0	120	MU	35.92	4.3	5.8
3	Cable Trays, Conduit, etc	lot	1	2000.00	eu	2.0	1	120.0	120	PE	38.90	4.7	6.7
4	Unitstrut/Misc. Hardware	lot	1	1000.00	eu	1.0	1	40.0	40	MS	37.73	1.5	2.5
5	Double Elec. Rack	ea	1	1200.00	cp	1.2	0	16.0	0	ES	33.00	0.0	1.2
6	BA panel 3 PH 30A	ea	1	50.00	CP	0.1	1	0.5	0	ESs	0.00	0.0	0.1
7	Breaker Panel	ea	2	200.00	CP	0.4	2	4.0	8	ES	33.00	0.3	0.7
8	Plug Strip	ea	2	20.00	eu	0.0	2	1.0	2	ES	33.00	0.1	0.1
9	Rack Fans	ea	2	50.00	eu	0.1	2	1.0	2	ES	33.00	0.1	0.2
10	X-conn blocks & frame	ea	1	500.00	cp	0.5	1	24.0	24	ES	33.00	0.8	1.3
11	Relay blks & frame	ea	1	500.00	cp	0.5	1	24.0	24	ES	33.00	0.8	1.3
** Subtotal **						8.8			460			16.8	25.6
** WBS: 1.2.4.2.4.5	Branch Line Mech/Elect System Integration												
1	Controls Checkout/Debug		0	0.00		0.0	6	16.0	96	MT	27.85	2.7	2.7
2			0	0.00		0.0	6	16.0	96	EM	33.00	3.2	3.2
3			0	0.00		0.0	6	16.0	96	CP	59.40	5.7	5.7
4			0	0.00		0.0	6	16.0	96	EI	33.00	3.2	3.2
5	Safety Systems Checkout		0	0.00		0.0	4	8.0	32	MT	27.85	0.9	0.9
6			0	0.00		0.0	4	8.0	32	EM	33.00	1.1	1.1
7			0	0.00		0.0	4	8.0	32	EI	33.00	1.1	1.1
8	Vacuum System Checks		0	0.00		0.0	4	16.0	64	MT	27.85	1.8	1.8
9			0	0.00		0.0	4	16.0	64	EM	33.00	2.1	2.1
10	Misc. Hardware	lot	1	1000.00	eu	1.0	1	40.0	40	MS	37.73	1.5	2.5
** Subtotal **						1.0			648			23.1	24.1
** WBS: 1.2.4.2.4.6.1	Fab/Buy Mech Parts & Subassy's												
1	Mirror polishing	ea	1	20300.00	A91	20.3	0	0.0	0		0.00	0.0	20.3
2	Optical coating	ea	1	1000.00	A88	1.0	0	0.0	0		0.00	0.0	1.0
3	Substrate parts machining	lot	1	3000.00	A91	3.0	0	0.0	0		0.00	0.0	3.0
4	Substrate brzng/leak chk	ea	1	200.00	eu	0.2	1	20.0	20	MU	35.92	0.7	0.9
5	Braze & leak chk fixtures	ea	1	200.00	A91	0.2	1	40.0	40	MU	35.92	1.4	1.6
6	UHV mirrr in-vac mounting	ea	1	1000.00	eu	1.0	1	120.0	120	MS	37.73	4.5	5.5
7	Mirror positioning mech	ea	1	1000.00	eu	1.0	1	80.0	80	MS	37.73	3.0	4.0
8	Mirror shippng crate/mnt	ea	1	800.00	A91	0.8	0	32.0	0	MS	37.73	0.0	0.8
9	Misc UHV flanges/hardware	lot	1	1000.00	eu	1.0	0	0.0	0		0.00	0.0	1.0
10	Bellows/conflat ass'y	ea	1	2500.00	A91	2.5	0	0.0	0		0.00	0.0	2.5
11	Tube/joystick ass'y	ea	1	200.00	A86	0.2	1	60.0	60	MS	37.73	2.3	2.5
12	Masks: parts & machining	ea	4	3000.00	A91	12.0	0	0.0	0		0.00	0.0	12.0
13	Masks:Braze & weld assy	ea	4	200.00	A91	0.8	4	40.0	160	MU	35.92	5.7	6.5
14	Lead shielding	ea	1	500.00	eu	0.5	1	40.0	40	MU	35.92	1.4	1.9
** Subtotal **						44.5			520			19.1	63.6
** WBS: 1.2.4.2.4.6.2	Fab/Buy Electrical and Controls												
1	Stepper/encoder/limits	ea	3	2500.00	eu	7.5	3	20.0	60	MS	37.73	2.3	9.8
2	Driver/encoder cables	ea	3	200.00	eu	0.6	3	16.0	48	EI	33.00	1.6	2.2
3	Flow switch & interlocks	ea	1	400.00	eu	0.4	1	4.0	4	EI	33.00	0.1	0.5
4	Module, VME, RS232,B-port	ea	1	800.00	eu	0.8	1	16.0	16	EI	33.00	0.5	1.3
5	Cable, RS232	ea	3	50.00	eu	0.1	0	0.0	0		0.00	0.0	0.1
6	Glow discharg optcl clean	ea	1	10000.00	eu	10.0	1	40.0	40	EI	33.00	1.3	11.3
** Subtotal **						19.5			168			5.8	25.3
** WBS: 1.2.4.2.4.6.3	Fab/Buy Vacuum Chamber & Supports												
1	Custom vacuum chamber	ea	1	10000.00	A91	10.0	0	0.0	0		0.00	0.0	10.0
2	Downstream mask chamber	ea	1	2500.00	cp	2.5	0	0.0	0		0.00	0.0	2.5
3	Misc. flanges/UHV hardwre	lot	1	1000.00	eu	1.0	0	0.0	0		0.00	0.0	1.0
4	Roughing valve	ea	2	650.00	cp	1.3	0	0.0	0		0.00	0.0	1.3
5	Mounting struts/hardware	ea	2	500.00	A91	1.0	2	8.0	16	MS	37.73	0.6	1.6

Technical Components Cost Estimate

ITM NBR	ITM DESCRIPTION	UNIT MEAS	NBR UNITS	UNIT COST	COST BASIS	TOTAL ISC K$	LBR UNTS	HRS/ UNIT	TOTAL HRS	CRAFT CODE	CRAFT RATE	TOTAL LABOR K$	ISC LABOR K$
6	Motorized struts/hardware	ea	4	1000.00	eu	4.0	4	16.0	64	MS	37.73	2.4	6.4
7	Support posts	ea	1	1500.00	A91	1.5	1	40.0	40	MS	37.73	1.5	3.0
8	Pump welded bellws assy	ea	1	4000.00	A91	4.0	0	0.0	0		0.00	0.0	4.0
9	Bellws inspect/clean/bake	ea	1	50.00	eu	0.1	1	4.0	4	MU	35.92	0.1	0.2
** Subtotal **						25.4			124			4.7	30.0
** WBS: 1.2.4.2.4.6.4	Vacuum Pumping, Gauges, Controllers, P.S.												
1	Ion pump, 400 l/s	ea	1	7500.00	A91	7.5	1	8.0	8	MU	35.92	0.3	7.8
2	Ion pump controller	ea	1	2500.00	A91	2.5	1	8.0	8	EI	33.00	0.3	2.8
3	Ion pump cable,bakeable	ea	1	250.00	A91	0.2	0	0.0	0		0.00	0.0	0.2
4	IEEE-48 cable,3m cntrller	ea	1	150.00	cp	0.1	0	0.0	0		0.00	0.0	0.1
5	Ion gauge & controls	ea	1	3500.00	A91	3.5	1	8.0	8	MU	35.92	0.3	3.8
6	Ion gauge cable, bakeable	ea	1	250.00	cp	0.2	1	8.0	8	EI	33.00	0.3	0.5
7	Junction box,IG cable	ea	1	250.00	eu	0.2	0	0.0	0		0.00	0.0	0.2
8	Interlock cable	ea	1	100.00	eu	0.1	0	0.0	0		0.00	0.0	0.1
** Subtotal **						14.5			32			1.1	15.6
** WBS: 1.2.4.2.4.6.5	Assemble, Bakeout, Test												
1	Assemble & test	ea	1	500.00	eu	0.5	1	120.0	120	MS	37.73	4.5	5.0
2	Bakeout & UHV qualify	lot	1	500.00	eu	0.5	1	120.0	120	MU	35.92	4.3	4.8
3	Survey/calibration		0	0.00		0.0	2	16.0	32	MU	35.92	1.1	1.1
4	Misc tools/fixtrs/cart	ea	1	1000.00	eu	1.0	1	80.0	80	MS	37.73	3.0	4.0
** Subtotal **						2.0			352			13.0	15.0
** WBS: 1.2.4.2.4.6.6	Installation												
1	LCW hardware/connections	lot	1	300.00	eu	0.3	1	16.0	16	MU	35.92	0.6	0.9
2	Transport/on-site setup	lot	1	200.00	eu	0.2	2	16.0	32	MU	35.92	1.1	1.3
3	Vac assemble & leak check	lot	1	50.00	eu	0.1	1	20.0	20	MU	35.92	0.7	0.8
4	Installation alignment		0	0.00		0.0	2	32.0	64	MU	35.92	2.3	2.3
5	Mech install/test/debug	lot	1	500.00	eu	0.5	2	40.0	80	MU	35.92	2.9	3.4
6	Elec installation		0	0.00		0.0	1	20.0	20	IEL	62.85	1.3	1.3
** Subtotal **						1.1			232			8.9	9.9
** WBS: 1.2.4.2.4.6.7	Bellows												
1	Welded bellows assy	ea	1	4000.00	A91	4.0	0	0.0	0		0.00	0.0	4.0
2	Blank flnges,gskts,etc	lot	2	300.00	cp	0.6	0	0.0	0		0.00	0.0	0.6
3	Inspct,clean,prelim bake	ea	2	50.00	eu	0.1	2	4.0	8	MU	35.92	0.3	0.4
** Subtotal **						4.7			8			0.3	5.0
** WBS: 1.2.4.2.4.6.8	Collimating Spool												
1	Spool piece	ea	1	2000.00	A91	2.0	1	8.0	8	MU	35.92	0.3	2.3
2	Misc flanges & UHV hrdwre	ea	1	500.00	eu	0.5	1	8.0	8	MS	37.73	0.3	0.8
3	Lead shielding/mounting	ea	1	500.00	eu	0.5	1	40.0	40	MS	37.73	1.5	2.0
** Subtotal **						3.0			56			2.1	5.1
** WBS: 1.2.4.2.4.6.9	Isolation Valve												
1	Valve & contrllr proc.	ea	1	15000.00	A91	15.0	1	8.0	8	MU	35.92	0.3	15.3
2	Prelim assmble & test	ea	1	50.00	eu	0.1	1	4.0	4	MU	35.92	0.1	0.2
3	Inspect,clean, etc	ea	1	50.00	eu	0.1	1	4.0	4	MU	35.92	0.1	0.2
4	Cables & connectors	lot	1	200.00	eu	0.2	1	2.0	2	EI	33.00	0.1	0.3
5	Blank flanges & hardware	lot	2	200.00	eu	0.4	0	0.0	0		0.00	0.0	0.4
** Subtotal **						15.7			18			0.6	16.3
** WBS: 1.2.5.1.1	U3.65 Undulator EDI												
1	Engineering		0	0.00		0.0	1	3100.0	3100	ME	59.40	184.1	184.1
2	Design		0	0.00		0.0	1	3100.0	3100	MD	42.25	131.0	131.0
3	S&E	lot	1	16065.00		16.1	0	0.0	0		0.00	0.0	16.1

Technical Components Cost Estimate

ITM NBR	ITM DESCRIPTION	UNIT MEAS	NBR UNITS	UNIT COST	COST BASIS	TOTAL ISC K$	LBR UNTS	HRS/ UNIT	TOTAL HRS	CRAFT CODE	CRAFT RATE	TOTAL LABOR K$	ISC + LABOR K$
** Subtotal **						16.1			6200			315.1	331.2
** WBS: 1.2.5.1.2	U3.65 Front End EDI												
1	Design		0	0.00		0.0	1	2000.0	2000	MD	42.25	84.5	84.5
3	S&E	lot	1	3600.00	eu	3.6	0	0.0	0		0.00	0.0	3.6
** Subtotal **						3.6			2000			84.5	88.1
** WBS: 1.2.5.1.3	U3.65 Branchline EDI												
1	Engineering		0	0.00		0.0	1	2400.0	2400	ME	59.40	142.6	142.6
2	Design		0	0.00		0.0	1	7200.0	7200	MD	42.25	304.2	304.2
3	S&E	lot	1	31900.00	eu	31.9	0	0.0	0		0.00	0.0	31.9
** Subtotal **						31.9			9600			446.8	478.7
** WBS: 1.2.5.2.1.1.1	Magnetic Material												
1	NDFE Blocks	ea	3020	46.93	VQ	141.7	0	0.0	0		0.00	0.0	141.7
2	Gauges/Field Coils/Holdrs	lot	1	300.00	EU	0.3	1	160.0	160	MT	27.85	4.5	4.8
3	Measurement Prep		0	0.00		0.0	1	20.0	20	EM	33.00	0.7	0.7
4			0	0.00		0.0	1	20.0	20	EE	59.40	1.2	1.2
5	Measurements	LOT	1	100.00	EU	0.1	0	0.0	0		0.00	0.0	0.1
6	3-Axis H.C. Meas		0	0.00		0.0	300	0.4	108	EM	33.00	3.6	3.6
7	1-Axis H.C. Meas		0	0.00		0.0	2720	0.2	653	EM	33.00	21.5	21.5
8	Surface Measurements		0	0.00		0.0	3020	0.2	544	EM	33.00	17.9	17.9
9	Supervision		0	0.00		0.0	1	120.0	120	EE	59.40	7.1	7.1
** Subtotal **						142.1			1624			56.5	198.6
** WBS: 1.2.5.2.1.1.2	Model Pole & Pole Assembly												
1	NdFe Blocks		0	0.00		0.0	4	4.0	16	MS	37.73	0.6	0.6
2	Test Fixture & Assembly	ea	1	100.00	eu	0.1	1	80.0	80	MT	27.85	2.2	2.3
3	Model Measurements		0	0.00		0.0	1	40.0	40	EM	33.00	1.3	1.3
** Subtotal **						0.1			136			4.2	4.3
** WBS: 1.2.5.2.1.1.3	Pole Assemblies												
1	Vanadium Permendur	ea	486	32.40	A85	15.7	0	0.0	0		0.00	0.0	15.7
2	Keepers	ea	486	304.00	A82	147.7	0	0.0	0		0.00	0.0	147.7
3	Keeper Inspection	lot	1	1000.00	EU	1.0	486	0.2	97	MM	38.60	3.8	4.8
4	Containers	ea	486	15.00	EU	7.3	0	0.0	0		0.00	0.0	7.3
5	Assy Fixtures	ea	10	50.00	A82	0.5	12	4.0	48	MM	38.60	1.9	2.4
6	Assembly	ea	486	10.00	A82	4.9	486	5.0	2430	MM	38.60	93.8	98.7
7	Pole Assembly Mounts	ea	12	350.00	CP	4.2	12	32.0	384	MM	38.60	14.8	19.0
** Subtotal **						181.3			2959			114.2	295.6
** WBS: 1.2.5.2.1.1.4	End Pole Assemblies												
1	End Pole Keepers	LOT	1	100.00	EU	0.1	8	12.0	96	MM	38.60	3.7	3.8
2	NdFe Block Cutting		0	0.00		0.0	24	4.0	96	MS	37.73	3.6	3.6
3	Assembly - Keepers		0	0.00		0.0	8	8.0	64	MA	38.60	2.5	2.5
4	Rotator		0	0.00		0.0	8	32.0	256	MM	38.60	9.9	9.9
5	Rotator Block Cutting		0	0.00		0.0	24	4.0	96	MS	37.73	3.6	3.6
6	Assemble - Rotator		0	0.00		0.0	8	4.0	32	MA	38.60	1.2	1.2
7	Rotator Linkage	ea	8	100.00	EU	0.8	8	4.0	32	MM	38.60	1.2	2.0
8	Manual Rotatr Drv (Optnl)	ea	8	500.00	CP	4.0	8	16.0	128	MM	38.60	4.9	8.9
9			0	0.00		0.0	8	4.0	32	MA	38.60	1.2	1.2
** Subtotal **						4.9			832			31.9	36.8
** WBS: 1.2.5.2.1.1.5	Backing Beams												
1	Backing Beams (2)	LBS	19200	0.28	CP	5.4	2	304.0	608	MM	38.60	23.5	28.8
2			0	0.00		0.0	2	16.0	32	MS	37.73	1.2	1.2
3	Backing Beam Heat Treatmt	ea	2	3000.00	EU	6.0	0	0.0	0		0.00	0.0	6.0
4	Flexible Yoke		0	0.00		0.0	1	16.0	16	MA	38.60	0.6	0.6
5	Shims	lot	1	100.00	EU	0.1	1	40.0	40	MM	38.60	1.5	1.6

Technical Components Cost Estimate

ITM NBR	ITM DESCRIPTION	UNIT MEAS	NBR UNITS	UNIT COST	COST BASIS	TOTAL ISC K$	LBR UNTS	HRS/ UNIT	TOTAL HRS	CRAFT CODE	CRAFT RATE	TOTAL LABOR K$	ISC + LABOR K$
6	Pole Shields	lot	1	500.00	EU	0.5	0	0.0	0		0.00	0.0	0.5
7	Pole Shields	LOT	12	50.00	EU	0.6	0	0.0	0		0.00	0.0	0.6
8	Rigging Hardware	lot	1	2000.00	EU	2.0	0	0.0	0		0.00	0.0	2.0
** Subtotal **						14.6			696			26.8	41.4
** WBS: 1.2.5.2.1.1.6	Magnet Structure Assembly												
1	Keeper Installation Tool		0	0.00		0.0	1	21.0	21	MM	38.60	0.8	0.8
2	Keeper Pole Mount Assembl	ea	12	100.00	EU	1.2	12	36.0	432	MA	38.60	16.7	17.9
3	End Pole Assembly		0	0.00		0.0	4	12.0	48	MM	38.60	1.9	1.9
4	Pole Mount/Back Bm Assy		0	0.00		0.0	1	24.0	24	MM	38.60	0.9	0.9
5	Pole Mount/Bckg Bm Assy	ea	12	100.00	EU	1.2	12	24.0	288	MA	38.60	11.1	12.3
6	Fiducializing	lot	1	100.00	EU	0.1	2	16.0	32	MA	38.60	1.2	1.3
** Subtotal **						2.5			845			32.6	35.1
** WBS: 1.2.5.2.1.1.7	Magnetic Measurement: Mechanical												
1	Coil & Probe Mounts		0	0.00		0.0	1	40.0	40	MT	27.85	1.1	1.1
2	Assembly Section Setup		0	0.00		0.0	12	12.0	144	MA	38.60	5.6	5.6
** Subtotal **						0.0			184			6.7	6.7
** WBS: 1.2.5.2.1.1.8	Magnetic Measurements: Electrical												
1	Setup Assembly Sections		0	0.00		0.0	1	16.0	16	EE	59.40	1.0	1.0
2			0	0.00		0.0	12	4.0	48	ES	33.00	1.6	1.6
3	Data Acquire: Assy Sectns		0	0.00		0.0	12	3.0	36	EE	59.40	2.1	2.1
4			0	0.00		0.0	12	8.0	96	ES	33.00	3.2	3.2
5	Data Analysis:Assy Sectns		0	0.00		0.0	1	80.0	80	EE	59.40	4.8	4.8
** Subtotal **						0.0			276			12.6	12.6
** WBS: 1.2.5.2.1.2.1	Support System Fabrication												
1	Support System Assembly	ea	1	40000.00	EU	40.0	0	0.0	0		0.00	0.0	40.0
2	Associated Parts	lot	1	2355.00	EU	2.4	1	66.0	66	MM	38.60	2.5	4.9
3	Miscellaneous	lot	1	500.00	EU	0.5	1	50.0	50	MM	38.60	1.9	2.4
4	Assembly	lot	1	75.00	EU	0.1	1	187.0	187	MA	38.60	7.2	7.3
** Subtotal **						42.9			303			11.7	54.6
** WBS: 1.2.5.2.1.2.2	Drive System Fabrication												
1	Roller Screw Assembly	ea	8	3500.00	EU	28.0	0	0.0	0		0.00	0.0	28.0
2	Spring System	ea	1	4104.00	CP	4.1	8	30.0	240	MM	38.60	9.3	13.4
3	Bearing System	lot	1	3120.00	EU	3.1	1	225.0	225	MM	38.60	8.7	11.8
4	Sprocket/Chain System	lot	1	1759.00	CP	1.8	1	90.0	90	MM	38.60	3.5	5.2
5	Gear Box & Mtg.	ea	1	1000.00	EU	1.0	1	38.0	38	MM	38.60	1.5	2.5
6	Encoder System	lot	1	4607.00	CP	4.6	1	40.0	40	MM	38.60	1.5	6.2
7	Motor Mounting Bracket	ea	1	25.00	CP	0.0	1	38.0	38	MM	38.60	1.5	1.5
8	Fan System	lot	1	70.00	CP	0.1	1	38.0	38	MM	38.60	1.5	1.5
9	Miscellaneous	lot	1	950.00	EU	0.9	1	230.0	230	MM	38.60	8.9	9.8
10	Assembly	lot	1	300.00	EU	0.3	1	397.0	397	MA	38.60	15.3	15.6
11	Roller Screw Kinematc Mnt	ea	8	500.00	eu	4.0	1	120.0	120	MM	38.60	4.6	8.6
** Subtotal **						47.9			1456			56.2	104.1
** WBS: 1.2.5.2.1.2.3	Local Temperature Control												
1	Frame & Curtain	lot	1	1300.00	EU	1.3	1	100.0	100	MA	38.60	3.9	5.2
2	Blower & Dryer System	lot	1	1050.00	EU	1.1	1	30.0	30	MA	38.60	1.2	2.2
3	Miscellaneous	lot	1	50.00	EU	0.1	1	15.0	15	MA	38.60	0.6	0.6
** Subtotal **						2.4			145			5.6	8.0
** WBS: 1.2.5.2.1.3.1	Vacuum Chambers												
1	Vacuum Chamber #1 (2 cm)		0	0.00		0.0	0	0.0	0		0.00	0.0	0.0
2	Material	lbs	2275	2.21	VQ	5.0	0	0.0	0		0.00	0.0	5.0
3	Fabrication		0	0.00		0.0	2	480.0	960	NC	56.50	54.2	54.2
4			0	0.00		0.0	2	160.0	320	MM	38.60	12.4	12.4

Technical Components Cost Estimate

ITM NBR	ITM DESCRIPTION	UNIT MEAS	NBR UNITS	UNIT COST	COST BASIS	TOTAL ISC K$	LBR UNTS	HRS/ UNIT	TOTAL HRS	CRAFT CODE	CRAFT RATE	TOTAL LABOR K$	ISC + LABOR K$
5	Fabricate Flanges	lot	1	2400.00	EU	2.4	1	120.0	120	MM	38.60	4.6	7.0
6	Fab Flange Transitions	lot	1	500.00	EU	0.5	6	20.0	120	MM	38.60	4.6	5.1
7	Assemble/Test		0	0.00		0.0	1	320.0	320	MA	38.60	12.4	12.4
8	System Assembly		0	0.00		0.0	1	80.0	80	MA	38.60	3.1	3.1
9	UHV Bakeout		0	0.00		0.0	1	160.0	160	MA	38.60	6.2	6.2
** Subtotal **						7.9			2080			97.5	105.4
** WBS: 1.2.5.2.1.3.2	Pumping Systems & Instrumentation												
1	Photon Stop/TSP Pump	ea	1	20000.00	EU	20.0	0	0.0	0		0.00	0.0	20.0
2	Ion Pump/TSP Combination	ea	3	4397.00	CP	13.2	0	0.0	0		0.00	0.0	13.2
3	90 deg Elbow to Pump	ea	3	530.00	CP	1.6	0	0.0	0		0.00	0.0	1.6
4	Right Angle Valve	ea	2	876.00	CP	1.8	0	0.0	0		0.00	0.0	1.8
5	View Port	ea	2	206.00	CP	0.4	0	0.0	0		0.00	0.0	0.4
** Subtotal **						36.9			0			0.0	36.9
** WBS: 1.2.5.2.1.3.3	Support Structure												
1	Vacuum Chamber Support	lot	1	2000.00	EU	2.0	1	160.0	160	MM	38.60	6.2	8.2
2	Ion Pump Supports	ea	3	200.00	EU	0.6	3	20.0	60	MM	38.60	2.3	2.9
3	Installation Fixture	ea	1	500.00	EU	0.5	1	80.0	80	MM	38.60	3.1	3.6
** Subtotal **						3.1			300			11.6	14.7
** WBS: 1.2.5.2.1.3.4	Vacuum Diagnostics												
1	IG Controller	eaa	1	755.00	CP	0.8	1	2.0	2	ES	33.00	0.1	0.8
2	Degas Module	ea	1	150.00	CP	0.1	0	0.0	0		0.00	0.0	0.1
3	Second IG Module	ea	1	75.00	CP	0.1	0	0.0	0		0.00	0.0	0.1
4	Process Control Module	ea	1	350.00	CP	0.3	0	0.0	0		0.00	0.0	0.3
5	Rack Mount	ea	1	50.00	CP	0.1	1	1.0	1	ES	33.00	0.0	0.1
6	Remote I/O Module	ea	1	30.00	CP	0.0	0	0.0	0		0.00	0.0	0.0
7	Dual Convectron Module	ea	1	400.00	CP	0.4	0	0.0	0		0.00	0.0	0.4
8	UHV Electrometer Module	ea	1	400.00	CP	0.4	0	0.0	0		0.00	0.0	0.4
9	IEEE-488 Interface	ea	1	360.00	CP	0.4	0	0.0	0		0.00	0.0	0.4
10	Nude Ion Gauge	ea	1	311.00	CP	0.3	1	1.0	1	MS	37.73	0.0	0.3
11	IG Cable: 50 feet	ea	1	195.00	CP	0.2	1	1.0	1	ES	33.00	0.0	0.2
12	Convectron Gauge	ea	1	139.00	CP	0.1	1	1.0	1	MS	37.73	0.0	0.2
13	Convectron Cable: 50 feet	ea	1	210.00	CP	0.2	1	1.0	1	ES	33.00	0.0	0.2
14	IG Connector	ea	1	10.00	EU	0.0	1	1.0	1	MS	37.73	0.0	0.0
15	IG Cable Interface	ea	1	50.00	EU	0.1	1	4.0	4	ES	33.00	0.1	0.2
16	Ion Pump Controller	ea	3	1948.00	CP	5.8	3	2.0	6	ES	33.00	0.2	6.0
17	Ion Pump Cable	ea	3	223.00	CP	0.7	3	4.0	12	ES	33.00	0.4	1.1
18	Ion Pump Cable Interface	ea	3	100.00	EU	0.3	3	4.0	12	ES	33.00	0.4	0.7
19	IEEE-488 Interface	ea	3	498.00	CP	1.5	0	0.0	0		0.00	0.0	1.5
20	ILC Crate	ea	1	1000.00	EU	1.0	1	40.0	40	ES	33.00	1.3	2.3
21	ILC	ea	5	1000.00	EU	5.0	1	40.0	40	ES	33.00	1.3	6.3
22	Sublimation Controller	ea	1	2000.00	CP	2.0	1	4.0	4	ES	33.00	0.1	2.1
23	Sublimation Mux	ea	1	2000.00	EU	2.0	1	80.0	80	ES	33.00	2.6	4.6
24	Filament Cables	set	1	500.00	EU	0.5	1	40.0	40	ES	33.00	1.3	1.8
** Subtotal **						22.3			246			8.1	30.4
** WBS: 1.2.5.2.1.4	Control System												
1	Motor MH172	ea	1	1565.00	VQ	1.6	0	0.0	0		0.00	0.0	1.6
2			0	0.00		0.0	0	0.0	0		0.00	0.0	0.0
3	Fan 172	ea	1	200.00	VQ	0.2	0	0.0	0		0.00	0.0	0.2
4	MH172 Driver	ea	1	3321.00	VQ	3.3	0	0.0	0		0.00	0.0	3.3
5			0	0.00		0.0	0	0.0	0		0.00	0.0	0.0
6	Controller IOD010	ea	1	776.00	VQ	0.8	0	0.0	0		0.00	0.0	0.8
7	Math 009	ea	1	158.00	VQ	0.2	0	0.0	0		0.00	0.0	0.2
8	Indexer/Cont.	ea	1	682.20	VQ	0.7	0	0.0	0		0.00	0.0	0.7
9	Card Cage	ea	1	614.00	VQ	0.6	0	0.0	0		0.00	0.0	0.6
10	P.S. PSD512	ea	1	278.00	VQ	0.3	0	0.0	0		0.00	0.0	0.3
11	UPS	ea	1	350.00	EU	0.3	0	0.0	0		0.00	0.0	0.3
12	Redlion Cont. Readout	ea	5	176.00	EU	0.9	0	0.0	0		0.00	0.0	0.9
13	Final Installation	lot	1	3000.00	EU	3.0	1	80.0	80	EI	33.00	2.6	5.6

Technical Components Cost Estimate

ITM NBR	ITM DESCRIPTION	UNIT MEAS	NBR UNITS	UNIT COST	COST BASIS	TOTAL ISC K$	LBR UNTS	HRS/ UNIT	TOTAL HRS	CRAFT CODE	CRAFT RATE	TOTAL LABOR K$	ISC LABOR K$
14	Final Test		0	0.00		0.0	1	40.0	40	EM	33.00	1.3	1.3
15	Shop Installation	lot	1	2000.00	EU	2.0	1	40.0	40	EI	33.00	1.3	3.3
16	Shop Test		0	0.00		0.0	1	40.0	40	EM	33.00	1.3	1.3
17	ILC	ea	3	1000.00	EU	3.0	3	8.0	24	EM	33.00	0.8	3.8
18	ILC Crate	ea	1	1000.00	EU	1.0	1	40.0	40	EI	33.00	1.3	2.3
** Subtotal **						17.8			264			8.7	26.5
** WBS: 1.2.5.2.1.5.1	Magnetic Measurements: Mechanical												
1	Coil & Probe Mounts		0	0.00		0.0	1	40.0	40	MU	35.92	1.4	1.4
2	Assembly Section Setup		0	0.00		0.0	12	12.0	144	MA	38.60	5.6	5.6
3	Coils	ea	2	105.00	eu	0.2	2	120.0	240	MU	35.92	8.6	8.8
4	Gap Spacers		0	0.00		0.0	1	24.0	24	MU	35.92	0.9	0.9
5	ID Setup	lot	1	315.00	eu	0.3	1	160.0	160	MA	38.60	6.2	6.5
** Subtotal **						0.5			608			22.7	23.2
** WBS: 1.2.5.2.1.5.2	Magnetic Measurements: Electrical												
1	Setup Assembly Sections		0	0.00		0.0	1	16.0	16	EE	59.40	1.0	1.0
2			0	0.00		0.0	12	4.0	48	ES	33.00	1.6	1.6
3	Data Acquire:Assy Section		0	0.00		0.0	12	3.0	36	EE	59.40	2.1	2.1
4			0	0.00		0.0	12	8.0	96	ES	33.00	3.2	3.2
5	Data Analysis:Assy Sectns		0	0.00		0.0	1	80.0	80	EE	59.40	4.8	4.8
6	Calibrate Null Coil		0	0.00		0.0	1	20.0	20	EE	59.40	1.2	1.2
7			0	0.00		0.0	1	20.0	20	ES	33.00	0.7	0.7
8	Code Software Coil Paramt		0	0.00		0.0	1	8.0	8	CP	59.40	0.5	0.5
9			0	0.00		0.0	1	8.0	8	EE	59.40	0.5	0.5
10	ID Setup: Electronic		0	0.00		0.0	1	16.0	16	EE	59.40	1.0	1.0
11			0	0.00		0.0	1	40.0	40	ES	33.00	1.3	1.3
12	ID Setup: Electrical		0	0.00		0.0	1	40.0	40	ES	33.00	1.3	1.3
13	ID: Data Acquisition		0	0.00		0.0	1	40.0	40	EE	59.40	2.4	2.4
14			0	0.00		0.0	1	240.0	240	ES	33.00	7.9	7.9
15	ID: Data Analysis		0	0.00		0.0	1	40.0	40	EE	59.40	2.4	2.4
16	Data Preparation		0	0.00		0.0	1	80.0	80	ES	33.00	2.6	2.6
17	Q/C Verification		0	0.00		0.0	1	20.0	20	EE	59.40	1.2	1.2
18			0	0.00		0.0	1	20.0	20	ES	33.00	0.7	0.7
19	Shutdown/storage		0	0.00		0.0	1	20.0	20	EE	59.40	1.2	1.2
20			0	0.00		0.0	1	40.0	40	ES	33.00	1.3	1.3
** Subtotal **						0.0			928			38.6	38.6
** WBS: 1.2.5.2.1.6	Installation												
1	Prepare & Truck to Site	lot	1	525.00	eu	0.5	1	80.0	80	MA	38.60	3.1	3.6
2	Rigger's Work		0	0.00		0.0	1	50.0	50	ICO	70.70	3.5	3.5
3	Survey & Alignment		0	0.00		0.0	1	46.0	46	IMT	70.70	3.3	3.3
4	Installation	lot	1	315.00	eu	0.3	1	100.0	100	IMT	70.70	7.1	7.4
5	Vacuum Hookup/pumpdown	lot	1	105.00	eu	0.1	1	40.0	40	IMT	70.70	2.8	2.9
6	Reinstall Temp Ctrl Housg		0	0.00		0.0	1	40.0	40	IMT	70.70	2.8	2.8
7	Miscellaneous		0	0.00		0.0	1	50.0	50	IMT	70.70	3.5	3.5
7	Miscellaneous		0	0.00		0.0	1	50.0	50	IMT	70.70	3.5	3.5
** Subtotal **						0.9			456			29.7	30.6
** WBS: 1.2.5.2.2.1.1	Aperture Plate												
1	Water Cooled Absorber	ea	1	800.00	A91	0.8	1	40.0	40	MS	37.73	1.5	2.3
2	Brazing Fixtures/Tooling	LOT	1	200.00	EU	0.2	1	30.0	30	MU	35.92	1.1	1.3
3	Flange Gaskets & Hardware	lot	2	200.00	eu	0.4	1	10.0	10	MS	37.73	0.4	0.8
** Subtotal **						1.4			80			3.0	4.4
** WBS: 1.2.5.2.2.1.2	Bellows												
1	Welded Bellows Assy	ea	1	3000.00	A91	3.0	1	1.0	1	MS	37.73	0.0	3.0
2	Inspect,Clean,Bake	ea	1	50.00	eu	0.1	1	2.0	2	MU	35.92	0.1	0.1
** Subtotal **						3.0			3			0.1	3.2

Technical Components Cost Estimate

ITM NBR	ITM DESCRIPTION	UNIT MEAS	NBR UNITS	UNIT COST	COST BASIS	TOTAL ISC K$	LBR UNTS	HRS/ UNIT	TOTAL HRS	CRAFT CODE	CRAFT RATE	TOTAL LABOR K$	ISC + LABOR K$
** WBS: 1.2.5.2.2.1.3	Collimating Spool												
1	Spool Piece	ea	1	1250.00	A91	1.2	1	8.0	8	MU	35.92	0.3	1.5
2	Misc. Flanges/UHV Hardwre	lot	1	500.00	eu	0.5	1	8.0	8	MS	37.73	0.3	0.8
3	Lead Shielding & Mounting	lot	1	500.00	eu	0.5	1	40.0	40	MS	37.73	1.5	2.0
** Subtotal **						2.2			56			2.1	4.3
** WBS: 1.2.5.2.2.1.4	Isolation Valve												
1	Valve & Controller Proc.	ea	1	22140.00	A91	22.1	0	0.0	0		0.00	0.0	22.1
2	Prelim Assemble & Test	lot	1	50.00	ea	0.1	1	8.0	8	MU	35.92	0.3	0.3
3	Inspect/Clean/Etc.	lot	1	50.00	eu	0.1	1	4.0	4	MU	35.92	0.1	0.2
4	Cables & connectors	lot	1	200.00	eu	0.2	1	4.0	4	EI	33.00	0.1	0.3
5	Blank flngs & mntng hrdwr	lot	2	200.00	eu	0.4	1	20.0	20	MS	37.73	0.8	1.2
** Subtotal **						22.8			36			1.3	24.2
** WBS: 1.2.5.2.2.1.5	Support Stand												
1	Support stand, misc. hrdw	ea	1	1500.00	eu	1.5	1	40.0	40	MS	37.73	1.5	3.0
2	Struts & hardware	ea	6	500.00	A91	3.0	6	8.0	48	MU	35.92	1.7	4.7
3	Misc.	lot	1	1000.00	eu	1.0	1	40.0	40	MS	37.73	1.5	2.5
** Subtotal **						5.5			128			4.7	10.2
** WBS: 1.2.5.2.2.1.6	Assemble, Bakeout, Test												
1	Clean parts	lot	1	100.00	eu	0.1	1	16.0	16	MU	35.92	0.6	0.7
2	Final vac assy,leak check	lot	1	100.00	eu	0.1	1	16.0	16	MU	35.92	0.6	0.7
3	Fiducialize		0	0.00		0.0	2	8.0	16	MS	37.73	0.6	0.6
3	Bakeout jackets	ea	1	1500.00	A91	1.5	1	8.0	8	MU	35.92	0.3	1.8
4	RGA scans, UHV pre-qualfy		0	0.00		0.0	1	16.0	16	MS	37.73	0.6	0.6
** Subtotal **						1.7			72			2.6	4.3
** WBS: 1.2.5.2.2.1.7	Installation												
1	Install/check valvs/cntrl	lot	1	200.00	eu	0.2	1	16.0	16	EI	33.00	0.5	0.7
2	Install utilities	lot	1	500.00	eu	0.5	1	16.0	16	MU	35.92	0.6	1.1
3	Install/align supprt stnd	lot	1	200.00	eu	0.2	2	16.0	32	MU	35.92	1.1	1.3
4	Instll/align vac hardware		0	0.00		0.0	2	16.0	32	MU	35.92	1.1	1.1
5	Vac cnnctns, leak check		0	0.00		0.0	2	16.0	32	MU	35.92	1.1	1.1
6	Bakeout		0	0.00		0.0	2	16.0	32	MU	35.92	1.1	1.1
7	Elec. installation		0	0.00		0.0	1	8.0	8	IEL	62.85	0.5	0.5
** Subtotal **						0.9			168			6.2	7.1
** WBS: 1.2.5.2.2.2.1	Fab/Buy Mech Parts & Subassy's												
1	Flange/mntng plate fab	ea	1	600.00	eu	0.6	1	40.0	40	MS	37.73	1.5	2.1
2	CF feed-thrus for electrn	ea	8	200.00	eu	1.6	0	0.0	0		0.00	0.0	1.6
3	Brazing & fixtures	lot	1	100.00	eu	0.1	1	20.0	20	MU	35.92	0.7	0.8
4	Feedthrus welding	lot	1	50.00	eu	0.1	1	20.0	20	MS	37.73	0.8	0.8
5	Blades fab	ea	2	100.00	eu	0.2	2	20.0	40	MS	37.73	1.5	1.7
6	In-vac parts & elec fab	lot	1	200.00	eu	0.2	1	40.0	40	MS	37.73	1.5	1.7
7	LCW hardware	lot	1	100.00	eu	0.1	1	8.0	8	MU	35.92	0.3	0.4
8	2-axis translation mech	ea	1	3000.00	eu	3.0	0	0.0	0		0.00	0.0	3.0
9	Outside vac mntng hardwre	lot	1	500.00	eu	0.5	1	20.0	20	MS	37.73	0.8	1.3
10	Blade alignment fixtures	lot	1	200.00	eu	0.2	1	20.0	20	MS	37.73	0.8	1.0
** Subtotal **						6.6			208			7.8	14.3
** WBS: 1.2.5.2.2.2.2	Fab/Buy Electrical and Controls												
1	Bias power supply	ea	2	3000.00	eu	6.0	2	8.0	16	EI	33.00	0.5	6.5
2	ILC & SBX	ea	3	1500.00	eu	4.5	3	20.0	60	EI	33.00	2.0	6.5
3	Electrometer	ea	2	1695.00	cp	3.4	2	8.0	16	EI	33.00	0.5	3.9
4	Eurocard crate	ea	1	1000.00	eu	1.0	1	16.0	16	EI	33.00	0.5	1.5
5	Thermocouples & controls	ea	2	500.00	eu	1.0	2	8.0	16	EI	33.00	0.5	1.5
6	Stepper motor controller	ea	1	3000.00	eu	3.0	1	16.0	16	EI	33.00	0.5	3.5
7	Cables	lot	1	1000.00	eu	1.0	1	40.0	40	EI	33.00	1.3	2.3
8	Flow switch	ea	2	400.00	eu	0.8	2	4.0	8	EI	33.00	0.3	1.1

Technical Components Cost Estimate

ITM NBR	ITM DESCRIPTION	UNIT MEAS	NBR UNITS	UNIT COST	COST BASIS	TOTAL ISC K$	LBR UNTS	HRS/ UNIT	TOTAL HRS	CRAFT CODE	CRAFT RATE	TOTAL LABOR K$	ISC + LABOR K$
** Subtotal **						20.7			188			6.2	26.9
** WBS: 1.2.5.2.2.2.3	Fab/Buy Support Stand												
1	Slides mounting hardwre	ea	1	200.00	eu	0.2	1	8.0	8	MS	37.73	0.3	0.5
2	Support post & hardware	lot	1	3000.00	eu	3.0	1	8.0	8	MS	37.73	0.3	3.3
3	Misc hardwre & fixtures	lot	1	1000.00	eu	1.0	1	40.0	40	MS	37.73	1.5	2.5
** Subtotal **						4.2			56			2.1	6.3
** WBS: 1.2.5.2.2.2.4	Bellows												
1	Welded bellows assy	ea	2	4000.00	A91	8.0	0	0.0	0		0.00	0.0	8.0
2	Blank flanges,gaskets,etc	lot	2	300.00	cp	0.6	0	0.0	0		0.00	0.0	0.6
3	Inspect,clean,bake	lot	2	50.00	eu	0.1	2	2.0	4	MU	35.92	0.1	0.2
** Subtotal **						8.7			4			0.1	8.8
** WBS: 1.2.5.2.2.2.5	Assemble, Bakeout, Test (Assembly Shop)												
1	Assemble/test PBPM mech	ea	1	500.00	eu	0.5	2	20.0	40	MU	35.92	1.4	1.9
2	Assemble/test PBPM elec	ea	1	500.00	eu	0.5	1	40.0	40	EI	33.00	1.3	1.8
3	Bakeout/UHV pre-qualify	ea	1	500.00	eu	0.5	1	40.0	40	MU	35.92	1.4	1.9
4	Fiducialization		0	0.00		0.0	2	16.0	32	MU	35.92	1.1	1.1
5	Misc assy equip,jackets,	lot	1	1000.00	eu	1.0	1	20.0	20	MU	35.92	0.7	1.7
** Subtotal **						2.5			172			6.1	8.6
** WBS: 1.2.5.2.2.2.6	Installation												
1	LCW Hardware & connection	lot	1	300.00	eu	0.3	2	20.0	40	MU	35.92	1.4	1.7
2	Transport & on-site setup	lot	1	200.00	eu	0.2	2	8.0	16	MU	35.92	0.6	0.8
3	Vac assemble & leak check	lot	1	100.00	eu	0.1	2	16.0	32	MU	35.92	1.1	1.2
4	Installation alignment		0	0.00		0.0	2	16.0	32	MS	37.73	1.2	1.2
5	Mech install,test,debug	lot	1	100.00	eu	0.1	2	20.0	40	MU	35.92	1.4	1.5
6	ELec. installation	lot	1	100.00	eu	0.1	1	20.0	20	IEL	62.85	1.3	1.4
7	Final bake & UHV qualify		0	0.00		0.0	2	20.0	40	MU	35.92	1.4	1.4
** Subtotal **						0.8			220			8.5	9.3
** WBS: 1.2.5.2.2.3.1	Fab/Buy Mech Parts & Subassy's												
1	Machine absorber blades	ea	2	1000.00	A91	2.0	2	40.0	80	MS	37.73	3.0	5.0
2	Braze absorber blades	ea	2	100.00	eu	0.2	2	20.0	40	MS	37.73	1.5	1.7
3	Brazing tooling/fixtures	ea	1	200.00	eu	0.2	1	20.0	20	MS	37.73	0.8	1.0
4	Blade/pivot mounting	ea	2	500.00	A91	1.0	2	60.0	120	MS	37.73	4.5	5.5
5	Pneumatic actuator mechan	ea	2	500.00	eu	1.0	2	40.0	80	MS	37.73	3.0	4.0
6	Limit stops & switches	ea	2	100.00	eu	0.2	2	20.0	40	MS	37.73	1.5	1.7
7	Bellws/conflat ass'y/weld	ea	2	1000.00	A91	2.0	2	40.0	80	MS	37.73	3.0	5.0
** Subtotal **						6.6			460			17.4	24.0
** WBS: 1.2.5.2.2.3.2	Fab/Buy Electrical and Controls												
1	ILC & SBX	ea	1	1500.00	eu	1.5	1	20.0	20	EI	33.00	0.7	2.2
2	Cables	lot	1	200.00	eu	0.2	1	8.0	8	EI	33.00	0.3	0.5
3	Flow switch & interlocks	ea	2	400.00	eu	0.8	2	4.0	8	EI	33.00	0.3	1.1
4	Position indicators	set	1	500.00	eu	0.5	1	8.0	8	EI	33.00	0.3	0.8
5	Air solenoids	ea	4	500.00	eu	2.0	4	8.0	32	EI	33.00	1.1	3.1
6	Air pressure interlocks	ea	1	500.00	eu	0.5	1	16.0	16	EI	33.00	0.5	1.0
** Subtotal **						5.5			92			3.0	8.5
** WBS: 1.2.5.2.2.3.3	Fab/Buy Vacuum Chamber & Supports												
1	Custom vacuum chamber	ea	1	8000.00	A91	8.0	1	40.0	40	MU	35.92	1.4	9.4
2	Misc flanges & UHV hardwr	lot	1	2500.00	eu	2.5	0	0.0	0		0.00	0.0	2.5
3	Mounting struts/hardware	ea	6	500.00	A91	3.0	6	8.0	48	MS	37.73	1.8	4.8
4	Support posts,frame,hrdwr	lot	1	1500.00	A91	1.5	1	40.0	40	MS	37.73	1.5	3.0
** Subtotal **						15.0			128			4.8	19.8

Technical Components Cost Estimate

ITM NBR	ITM DESCRIPTION	UNIT MEAS	NBR UNITS	UNIT COST	COST BASIS	TOTAL ISC K$	LBR UNTS	HRS/ UNIT	TOTAL HRS	CRAFT CODE	CRAFT RATE	TOTAL LABOR K$	ISC + LABOR K$
** WBS: 1.2.5.2.2.3.4	Vacuum Pumping, Gauges, Controllers, P.S.												
1	Ion pump, 400 l/s	ea	1	7527.00	A92	7.5	1	4.0	4	MU	35.92	0.1	7.7
2	Ion pump controller	ea	1	2180.00	A92	2.2	1	4.0	4	EI	33.00	0.1	2.3
3	Ion pump cable,bakeable	ea	1	250.00	A91	0.2	1	4.0	4	EI	33.00	0.1	0.4
4	IEEE-48 cable,3m cntrller	ea	1	421.00	A92	0.4	0	0.0	0		0.00	0.0	0.4
5	Roughing valve	ea	2	650.00	A91	1.3	0	0.0	0		0.00	0.0	1.3
6	Ion gauge & controls	ea	1	3500.00	A91	3.5	1	4.0	4	MU	35.92	0.1	3.6
7	Ion gauge cable, bakeable	ea	1	250.00	cp	0.2	1	4.0	4	EI	33.00	0.1	0.4
8	Junction box,IG cable	ea	1	200.00	eu	0.2	1	4.0	4	EI	33.00	0.1	0.3
9	Interlock cable	ea	1	100.00	eu	0.1	0	0.0	0		0.00	0.0	0.1
** Subtotal **						15.7			24			0.8	16.5
** WBS: 1.2.5.2.2.3.5	Assemble, Bakeout, Test												
1	Assemble & test	ea	1	500.00	eu	0.5	2	80.0	160	MU	35.92	5.7	6.2
2	Bakeout & UHV qualify	lot	1	500.00	eu	0.5	2	40.0	80	MS	37.73	3.0	3.5
3	Survey/calibration		0	0.00		0.0	2	16.0	32	MU	35.92	1.1	1.1
4	Misc tools,fixtures,cart,	lot	1	1000.00	eu	1.0	1	80.0	80	MU	35.92	2.9	3.9
** Subtotal **						2.0			352			12.8	14.8
** WBS: 1.2.5.2.2.3.6	Installation												
1	LCW hardware/connections	lot	1	300.00	eu	0.3	2	16.0	32	MU	35.92	1.1	1.4
2	Transport/on-site setup	lot	1	200.00	eu	0.2	2	16.0	32	MU	35.92	1.1	1.3
3	Vac assemble & leak check	lot	1	50.00	eu	0.1	2	16.0	32	MU	35.92	1.1	1.2
4	Installation alignment		0	0.00		0.0	2	16.0	32	MS	37.73	1.2	1.2
5	Pneumatic hardware/cnnctn	lot	1	300.00	eu	0.3	2	16.0	32	MU	35.92	1.1	1.4
6	Mech install/test/debug	lot	1	50.00	eu	0.1	2	16.0	32	MU	35.92	1.1	1.2
7	Elec installation		0	0.00		0.0	1	16.0	16	IEL	62.85	1.0	1.0
** Subtotal **						0.9			208			8.0	8.9
** WBS: 1.2.5.2.2.3.7	Titanium Sublimation Pump												
1	TSP pump spool piece	ea	1	2700.00	A91	2.7	0	0.0	0		0.00	0.0	2.7
2	TSP filaments & controllr	ea	1	3500.00	eu	3.5	1	8.0	8	EI	33.00	0.3	3.8
3	Flanges & UHV hardware	lot	1	500.00	eu	0.5	0	0.0	0		0.00	0.0	0.5
4	Misc (extrusions, etc.)	lot	1	1000.00	eu	1.0	1	20.0	20	MS	37.73	0.8	1.8
** Subtotal **						7.7			28			1.0	8.7
** WBS: 1.2.5.2.2.3.8	Isolation Valve												
1	Valve & controllr proc.	ea	1	18000.00	A91	18.0	0	0.0	0		0.00	0.0	18.0
2	Prelim assemble & test	lot	1	50.00	eu	0.1	1	8.0	8	MU	35.92	0.3	0.3
3	Inspection, cleaning, etc	lot	1	50.00	eu	0.1	1	4.0	4	MU	35.92	0.1	0.2
4	Cables & connectors	lot	1	200.00	eu	0.2	1	2.0	2	EI	33.00	0.1	0.3
5	Blank flanges & hardware	lot	2	200.00	eu	0.4	0	0.0	0		0.00	0.0	0.4
** Subtotal **						18.7			14			0.5	19.2
** WBS: 1.2.5.2.2.4.1	Fast Valve												
1	Modified VAT fast shutter	ea	1	26000.00	A91	26.0	0	0.0	0		0.00	0.0	26.0
** Subtotal **						26.0			0			0.0	26.0
** WBS: 1.2.5.2.2.4.2	Fab/Buy Electrical and Controls												
1	Cables & connectors	lot	1	500.00	A91	0.5	1	8.0	8	EI	33.00	0.3	0.8
2	Air pressure interlocks	ea	1	500.00	eu	0.5	1	16.0	16	EI	33.00	0.5	1.0
3	Junction box,IG cable	ea	3	200.00	eu	0.6	0	0.0	0		0.00	0.0	0.6
4	Interlock cable	ea	1	500.00	eu	0.5	0	0.0	0		0.00	0.0	0.5
** Subtotal **						2.1			24			0.8	2.9
** WBS: 1.2.5.2.2.4.3	Bellows												
1	Welded bellows assy	ea	1	3000.00	A91	3.0	1	4.0	4	MS	37.73	0.2	3.2
2	Blank flanges,gaskets,etc	lot	1	300.00	cp	0.3	0	0.0	0		0.00	0.0	0.3
3	Inspect,clean,bake	lot	1	50.00	eu	0.1	1	4.0	4	MU	35.92	0.1	0.2

Technical Components Cost Estimate

ITM NBR	ITM DESCRIPTION	UNIT MEAS	NBR UNITS	UNIT COST COST	BASIS	TOTAL ISC K$	LBR UNTS	HRS/ UNIT	TOTAL HRS	CRAFT CODE	CRAFT RATE	TOTAL LABOR K$	ISC LABOR K$
** Subtotal **						3.3			8			0.3	3.6
** WBS: 1.2.5.2.2.4.4	Aperture Plate												
1	Water-cooled absorber	ea	1	800.00	A91	0.8	1	40.0	40	MS	37.73	1.5	2.3
2	Brazing,fixtures,tooling	lot	1	200.00	eu	0.2	1	30.0	30	MU	35.92	1.1	1.3
3	Flange gaskets & hardware	lot	2	200.00	eu	0.4	1	10.0	10	MS	37.73	0.4	0.8
** Subtotal **						1.4			80			3.0	4.4
** WBS: 1.2.5.2.2.4.5	Assemble, Bakeout, Test												
1	Assemble & test	ea	1	500.00	eu	0.5	1	80.0	80	MU	35.92	2.9	3.4
2	Survey/calibration		0	0.00		0.0	1	16.0	16	MU	35.92	0.6	0.6
** Subtotal **						0.5			96			3.4	3.9
** WBS: 1.2.5.2.2.4.6	Installation												
1	Pneumatic hardwar/cnnctns	lot	1	300.00	eu	0.3	1	16.0	16	MU	35.92	0.6	0.9
2	Mech install/test/debug	lot	1	50.00	eu	0.1	1	16.0	16	MU	35.92	0.6	0.6
3	Elec installation		0	0.00		0.0	1	16.0	16	IEL	62.85	1.0	1.0
** Subtotal **						0.3			48			2.2	2.5
** WBS: 1.2.5.2.2.5.1	Fab/Buy Mech Parts & Subassy's												
1	Sintered tungsten shutter	ea	1	4000.00	eu	4.0	1	40.0	40	MS	37.73	1.5	5.5
2	Shutter flange-mounting	ea	1	500.00	eu	0.5	1	40.0	40	MS	37.73	1.5	2.0
3	In-vac position stops/mon	ea	1	1500.00	eu	1.5	1	80.0	80	MS	37.73	3.0	4.5
4	Bellows/cnflat ass'y/weld	ea	1	2000.00	eu	2.0	1	20.0	20	MS	37.73	0.8	2.8
5	Pneumatic actuatr/mountng	ea	1	2000.00	eu	2.0	1	120.0	120	MS	37.73	4.5	6.5
** Subtotal **						10.0			300			11.3	21.3
** WBS: 1.2.5.2.2.5.2	Fab/Buy Electrical and Controls												
1	ILC & SBX	ea	1	1500.00	eu	1.5	1	16.0	16	EI	33.00	0.5	2.0
2	Cables	lot	1	200.00	eu	0.2	1	16.0	16	EI	33.00	0.5	0.7
3	Position indicators	set	1	200.00	eu	0.2	1	16.0	16	EI	33.00	0.5	0.7
4	Air solenoids	ea	1	200.00	eu	0.2	1	8.0	8	EI	33.00	0.3	0.5
5	Air pressure interlocks	ea	1	200.00	eu	0.2	1	16.0	16	EI	33.00	0.5	0.7
** Subtotal **						2.3			72			2.4	4.7
** WBS: 1.2.5.2.2.5.3	Fab/Buy Vacuum Chamber & Supports												
1	Custom vacuum chamber	ea	1	5000.00	A91	5.0	1	20.0	20	MU	35.92	0.7	5.7
2	Misc flanges & UHV hardwr	lot	1	1000.00	eu	1.0	0	0.0	0		0.00	0.0	1.0
3	Roughing valve	ea	2	650.00	A91	1.3	0	0.0	0		0.00	0.0	1.3
4	Mounting struts/hardware	ea	6	500.00	A91	3.0	6	8.0	48	MS	37.73	1.8	4.8
5	Support posts	ea	2	1000.00	eu	2.0	2	20.0	40	MS	37.73	1.5	3.5
** Subtotal **						12.3			108			4.0	16.3
** WBS: 1.2.5.2.2.5.4	Vacuum Pumping, Gauges, Controllers, P.S.												
1	Ion pump, 220 l/s	ea	1	4865.00	A91	4.9	1	4.0	4	MU	35.92	0.1	5.0
2	Ion pump controller	ea	1	2500.00	A91	2.5	1	4.0	4	EI	33.00	0.1	2.6
3	Ion pump cable, bakeable	ea	1	250.00	A91	0.2	0	0.0	0		0.00	0.0	0.2
4	IEEE-488 cable,3m cntller	ea	1	150.00	cp	0.1	0	0.0	0		0.00	0.0	0.1
5	Ion gauge & controls	ea	1	3500.00	A91	3.5	1	4.0	4	MU	35.92	0.1	3.6
6	Ion gauge cable, bakeable	ea	1	250.00	cp	0.2	1	4.0	4	EI	33.00	0.1	0.4
7	Junction box, IG cable	ea	1	200.00	eu	0.2	0	0.0	0		0.00	0.0	0.2
8	Ion gauge controller	ea	1	3500.00	cp	3.5	0	0.0	0		0.00	0.0	3.5
9	Interlock cable	ea	1	100.00	eu	0.1	0	0.0	0		0.00	0.0	0.1
** Subtotal **						15.3			16			0.6	15.9
** WBS: 1.2.5.2.2.5.5	Assemble, Bakeout, Test												
1	Assemble & test	lot	1	500.00	eu	0.5	2	80.0	160	MU	35.92	5.7	6.2
2	Pre-bakeout tungstn block	ea	1	300.00	eu	0.3	1	20.0	20	MU	35.92	0.7	1.0

Technical Components Cost Estimate

ITM NBR	ITM DESCRIPTION	UNIT MEAS	NBR UNITS	UNIT COST COST	BASIS	TOTAL ISC K$	LBR UNTS	HRS/ UNIT	TOTAL HRS	CRAFT CODE	CRAFT RATE	TOTAL LABOR K$	ISC + LABOR K$
3	Survey/calibration		0	0.00		0.0	2	16.0	32	MU	35.92	1.1	1.1
3	Bakeout & UHV qualify	ea	1	500.00	eu	0.5	2	40.0	80	MU	35.92	2.9	3.4
4	Misc tools,fixtures,cart,	lot	1	1000.00	eu	1.0	1	40.0	40	MU	35.92	1.4	2.4
** Subtotal **						2.3			332			11.9	14.2
** WBS: 1.2.5.2.2.5.6	Installation												
1	Transport & on-site setup	lot	1	200.00	eu	0.2	2	16.0	32	MU	35.92	1.1	1.3
2	Vac assemble & leak check	lot	1	50.00	eu	0.1	2	16.0	32	MU	35.92	1.1	1.2
3	Instlltn algnmnt (stnd)		0	0.00		0.0	2	16.0	32	MS	37.73	1.2	1.2
4	Pneumatic hardwar/cnnctns	lot	1	300.00	eu	0.3	1	16.0	16	MU	35.92	0.6	0.9
5	Mech install,test,debug	lot	1	50.00	eu	0.1	2	16.0	32	MU	35.92	1.1	1.2
6	Elec installation		0	0.00		0.0	1	16.0	16	EI	33.00	0.5	0.5
** Subtotal **						0.6			160			5.8	6.4
** WBS: 1.2.5.2.2.5.7	Shield Wall Transition Spool												
1	SWT spool piece	ea	1	2500.00	A91	2.5	1	4.0	4	MS	37.73	0.2	2.7
2	Misc. flanges & UHV hrdwr	lot	1	500.00	eu	0.5	1	4.0	4	MS	37.73	0.2	0.7
3	Lead shielding & supports	lot	1	500.00	eu	0.5	1	40.0	40	MS	37.73	1.5	2.0
4	Struts and hardware	lot	2	500.00	A91	1.0	2	8.0	16	MS	37.73	0.6	1.6
5	Misc extrusions, etc.	lot	1	1000.00	eu	1.0	1	40.0	40	MS	37.73	1.5	2.5
** Subtotal **						5.5			104			3.9	9.4
** WBS: 1.2.5.2.2.5.8	Isolation Valve												
1	Valve & controller proc	ea	1	15000.00	vq	15.0	0	0.0	0		0.00	0.0	15.0
2	Prelim assy & test	lot	1	50.00	eu	0.1	1	8.0	8	MU	35.92	0.3	0.3
3	Inspection,cleaning,etc.	lot	1	50.00	eu	0.1	1	4.0	4	MU	35.92	0.1	0.2
4	Cables & connectors	ea	1	200.00	eu	0.2	1	2.0	2	EI	33.00	0.1	0.3
5	Blank flanges & hardware	lot	2	200.00	eu	0.4	0	0.0	0		0.00	0.0	0.4
** Subtotal **						15.7			14			0.5	16.2
** WBS: 1.2.5.2.2.6.1	Fab/Buy Mech Parts & Subassy's												
1	Flange & mntng plate fab	ea	1	600.00	eu	0.6	1	40.0	40	MS	37.73	1.5	2.1
2	Cf feedthru for electrncs	ea	8	200.00	eu	1.6	0	0.0	0		0.00	0.0	1.6
3	Brazing & fixtures	ea	1	100.00	eu	0.1	1	20.0	20	MU	35.92	0.7	0.8
4	Feedthrus - welding	ea	1	50.00	eu	0.1	1	20.0	20	MS	37.73	0.8	0.8
5	Blades fab	ea	4	100.00	eu	0.4	4	20.0	80	MS	37.73	3.0	3.4
6	In-vac parts & elec fab	lot	1	200.00	eu	0.2	1	40.0	40	MS	37.73	1.5	1.7
7	LCW Hardware	lot	1	100.00	eu	0.1	1	8.0	8	MU	35.92	0.3	0.4
8	2-axis transltn mechanism	ea	1	3000.00	eu	3.0	0	0.0	0		0.00	0.0	3.0
9	Outside-vac mntng hardwre	lot	1	500.00	eu	0.5	1	20.0	20	MS	37.73	0.8	1.3
10	Blade alignment fixtures	ea	1	200.00	eu	0.2	1	20.0	20	MS	37.73	0.8	1.0
** Subtotal **						6.8			248			9.3	16.1
** WBS: 1.2.5.2.2.6.2	Fab/Buy Electrical and Controls												
1	Bias power supply	ea	2	3000.00	eu	6.0	2	8.0	16	EI	33.00	0.5	6.5
2	ILC & SBX	ea	3	1500.00	eu	4.5	3	20.0	60	EI	33.00	2.0	6.5
3	Electrometer	ea	4	1695.00	cp	6.8	4	8.0	32	EI	33.00	1.1	7.8
4	Eurocard crate	ea	1	1000.00	eu	1.0	1	16.0	16	EI	33.00	0.5	1.5
5	Thermocouples & controls	ea	2	500.00	eu	1.0	2	8.0	16	EI	33.00	0.5	1.5
6	Stepper motor controller	ea	1	3000.00	eu	3.0	1	16.0	16	EI	33.00	0.5	3.5
7	Cables	lot	1	1000.00	eu	1.0	1	32.0	32	EI	33.00	1.1	2.1
8	Flow switch	ea	2	400.00	eu	0.8	2	4.0	8	EI	33.00	0.3	1.1
** Subtotal **						24.1			196			6.5	30.5
** WBS: 1.2.5.2.2.6.3	Fab/Buy Support Stand												
1	Slides mounting hardwr	ea	1	200.00	EU	0.2	1	8.0	8	MS	37.73	0.3	0.5
2	Support post & hardware	ea	1	3000.00	eu	3.0	1	8.0	8	MS	37.73	0.3	3.3
3	Misc hardware & fixtures	ea	1	1000.00	eu	1.0	1	40.0	40	MS	37.73	1.5	2.5

Technical Components Cost Estimate

ITM NBR	ITM DESCRIPTION	UNIT MEAS	NBR UNITS	UNIT COST COST	BASIS	TOTAL ISC K$	LBR UNTS	HRS/ UNIT	TOTAL HRS	CRAFT CODE	CRAFT RATE	TOTAL LABOR K$	ISC LABOR K$
** Subtotal **						4.2			56			2.1	6.3
** WBS: 1.2.5.2.2.6.4	Bellows												
1	Welded bellows assy	ea	2	4000.00	A91	8.0	0	0.0	0		0.00	0.0	8.0
2	Blank flanges, gaskets,	lot	2	300.00	cp	0.6	0	0.0	0		0.00	0.0	0.6
3	Inspection,cleaning,bake	lot	2	50.00	eu	0.1	2	2.0	4	MU	35.92	0.1	0.2
** Subtotal **						8.7			4			0.1	8.8
** WBS: 1.2.5.2.2.6.5	Assemble, Bakeout, Test												
1	Assemble/test PBPM mech	ea	1	500.00	eu	0.5	2	20.0	40	MU	35.92	1.4	1.9
2	Assemble/test PBPM elec	ea	1	500.00	eu	0.5	1	40.0	40	EI	33.00	1.3	1.8
3	Bakeout/UHV pre-qualify	ea	1	500.00	eu	0.5	1	40.0	40	MU	35.92	1.4	1.9
4	Fiducialization		0	0.00		0.0	2	16.0	32	MU	35.92	1.1	1.1
5	Misc assy equip,jackets,	lot	1	1000.00	eu	1.0	1	20.0	20	MU	35.92	0.7	1.7
** Subtotal **						2.5			172			6.1	8.6
** WBS: 1.2.5.2.2.6.6	Installation												
1	LCW Hardware & connection	lot	1	300.00	eu	0.3	2	20.0	40	MU	35.92	1.4	1.7
2	Transport & on-site setup	lot	1	200.00	eu	0.2	2	8.0	16	MU	35.92	0.6	0.8
3	Vac assemble & leak check	lot	1	100.00	eu	0.1	2	16.0	32	MU	35.92	1.1	1.2
4	Installation alignment		0	0.00		0.0	2	16.0	32	MU	35.92	1.1	1.1
5	Mech install,test,debug	lot	1	100.00	eu	0.1	2	20.0	40	MU	35.92	1.4	1.5
6	ELec. installation	lot	1	100.00	eu	0.1	1	20.0	20	IEL	62.85	1.3	1.4
7	Final bake & UHV qualify		0	0.00		0.0	2	20.0	40	MU	35.92	1.4	1.4
** Subtotal **						0.8			220			8.4	9.2
** WBS: 1.2.5.2.2.7.1	Fab/Buy Mech Parts & Subassy's												
1	Misc machine shop effort	lot	1	1000.00	eu	1.0	1	80.0	80	MS	37.73	3.0	4.0
2	Misc mech tech & tools	lot	1	1000.00	eu	1.0	1	80.0	80	MU	35.92	2.9	3.9
** Subtotal **						2.0			160			5.9	7.9
** WBS: 1.2.5.2.2.7.2	Fab/Buy Electical and Controls												
1	Cables,valve actuation &	lot	3	100.00	eu	0.3	3	8.0	24	EI	33.00	0.8	1.1
2	X-connect blocks & frame	ea	1	500.00	eu	0.5	1	40.0	40	EI	33.00	1.3	1.8
3	Relays blocks & frame	ea	1	580.00	cp	0.6	1	40.0	40	EI	33.00	1.3	1.9
4	48 Ch. opto-isolator	ea	1	700.00	cp	0.7	1	40.0	40	EI	33.00	1.3	2.0
5	Cable trays, conduit, etc	lot	1	2000.00	eu	2.0	1	80.0	80	IEL	62.85	5.0	7.0
6	Double elec. rack	ea	1	1300.00	eu	1.3	1	40.0	40	EI	33.00	1.3	2.6
7	BA panel 3 ph 30A	ea	1	50.00	cp	0.1	1	1.0	1	EI	33.00	0.0	0.1
8	Breaker panel	ea	2	200.00	cp	0.4	2	4.0	8	EI	33.00	0.3	0.7
9	Plug strip	ea	2	20.00	eu	0.0	2	4.0	8	EI	33.00	0.3	0.3
10	Rack fans	ea	2	50.00	eu	0.1	2	2.0	4	EI	33.00	0.1	0.2
11	Flow switches/interlocks	ea	2	400.00	eu	0.8	2	8.0	16	EI	33.00	0.5	1.3
** Subtotal **						6.8			301			12.3	19.1
** WBS: 1.2.5.2.2.7.3	Fab/Buy Vacuum Chamber & Supports												
1	Misc flanges,viewprts,etc	lot	1	3000.00	eu	3.0	0	0.0	0		0.00	0.0	3.0
2	Roughing valves	ea	4	650.00	cp	2.6	0	0.0	0		0.00	0.0	2.6
3	Misc. unistrut/hardware	lot	1	500.00	eu	0.5	1	20.0	20	MU	35.92	0.7	1.2
** Subtotal **						6.1			20			0.7	6.8
** WBS: 1.2.5.2.2.7.4	Vacuum Pumping, Gauges, Controllers, P.S.												
1	RGA system	ea	1	12000.00	cp	12.0	1	40.0	40	MU	35.92	1.4	13.4
2	RGA cable, bakeable	ea	1	250.00	cp	0.2	1	8.0	8	EI	33.00	0.3	0.5
3	Junction box, RGA cable	ea	1	200.00	eu	0.2	0	0.0	0		0.00	0.0	0.2
4	Interlock cable	ea	1	100.00	eu	0.1	0	0.0	0		0.00	0.0	0.1
** Subtotal **						12.5			48			1.7	14.3

Technical Components Cost Estimate

ITM NBR	ITM DESCRIPTION	UNIT MEAS	NBR UNITS	UNIT COST	COST BASIS	TOTAL ISC K$	LBR UNTS	HRS/ UNIT	TOTAL HRS	CRAFT CODE	CRAFT RATE	TOTAL LABOR K$	ISC + LABOR K$
** WBS: 1.2.5.2.2.7.5	Assemble, Bakeout, Test												
1	Misc assemble & test	ea	1	1000.00	eu	1.0	2	40.0	80	MU	35.92	2.9	3.9
2	Misc bakeout/UHV qualify	lot	1	1000.00	eu	1.0	2	40.0	80	MU	35.92	2.9	3.9
3	Survey/calibration		0	0.00		0.0	3	32.0	96	MU	35.92	3.4	3.4
** Subtotal **						2.0			256			9.2	11.2
** WBS: 1.2.5.2.2.7.6	Installation												
1	Shielding wall modify	lot	1	500.00	eu	0.5	2	40.0	80	MU	35.92	2.9	3.4
2	Lead shielding installatn	lot	1	500.00	eu	0.5	1	40.0	40	MU	35.92	1.4	1.9
3	Installatn final alignment		0	0.00		0.0	2	40.0	80	MU	35.92	2.9	2.9
4	F.E. pneumatic service	ea	1	1000.00	eu	1.0	1	40.0	40	MU	35.92	1.4	2.4
5	F.E. LCW service	lot	1	1000.00	eu	1.0	1	40.0	40	MU	35.92	1.4	2.4
6	Mech install/test/debug	lot	1	50.00	eu	0.1	1	40.0	40	MU	35.92	1.4	1.5
7	Elec installation		0	0.00		0.0	1	80.0	80	IEL	62.85	5.0	5.0
8	LCW temp control system	ea	1	5000.00	A90	5.0	1	40.0	40	EI	33.00	1.3	6.3
** Subtotal **						8.1			440			17.8	25.9
** WBS: 1.2.5.2.2.8	Safety Systems												
1	ILC & SBX	ea	2	1500.00	eu	3.0	2	20.0	40	EI	33.00	1.3	4.3
2	Eurocard crate	ea	2	800.00	eu	1.6	0	0.0	0		0.00	0.0	1.6
3	Key panel	ea	1	400.00	cp	0.4	0	0.0	0		0.00	0.0	0.4
4	Monitor lights panel	ea	6	500.00	cp	3.0	0	0.0	0		0.00	0.0	3.0
5	Push button panel	ea	1	500.00	cp	0.5	0	0.0	0		0.00	0.0	0.5
6	Breaker panel	ea	1	500.00	cp	0.5	0	0.0	0		0.00	0.0	0.5
7	Cables	lot	1	500.00	eu	0.5	0	0.0	0		0.00	0.0	0.5
8	Wiring assembly		0	0.00		0.0	1	120.0	120	EI	33.00	4.0	4.0
9	Video camera & lens	ea	1	800.00	cp	0.8	0	0.0	0		0.00	0.0	0.8
10	Video monitor	ea	1	300.00	cp	0.3	0	0.0	0		0.00	0.0	0.3
11	RG59 coax,camera/monitor	ea	1	50.00	eu	0.1	1	2.0	2	EI	33.00	0.1	0.1
12	Video connectors	ea	2	5.00	eu	0.0	2	0.5	1	EI	33.00	0.0	0.0
13	Misc hardware	lot	1	1000.00	eu	1.0	1	80.0	80	MS	37.73	3.0	4.0
14	Elec. installation		0	0.00		0.0	1	40.0	40	IEL	62.85	2.5	2.5
** Subtotal **						11.7			283			10.9	22.6
** WBS: 1.2.5.2.3.1.1	Beam Defining Apertures												
1	Vacuum Chamber	ea	1	12000.00	A87	12.0	0	0.0	0		0.00	0.0	12.0
2	Roughing Valve	ea	1	750.00	cp	0.8	0	0.0	0		0.00	0.0	0.8
3	Tank Support Posts	ea	1	1000.00	eu	1.0	0	0.0	0		0.00	0.0	1.0
4	Tank Mounting Struts	ea	6	200.00	eu	1.2	6	20.0	120	MS	37.73	4.5	5.7
5	Brazed Absorber Assy	ea	4	500.00	eu	2.0	4	100.0	400	MS	37.73	15.1	17.1
6	Brazing & Tooling Fixturs	ea	1	100.00	eu	0.1	2	40.0	80	MS	37.73	3.0	3.1
7	UHV Mounting Hardware	lot	4	500.00	eu	2.0	4	20.0	80	MS	37.73	3.0	5.0
8	Bellows Assembly	ea	4	2000.00	eu	8.0	0	0.0	0		0.00	0.0	8.0
9	Stepper/Encoder Positione	ea	4	2500.00	eu	10.0	0	0.0	0		0.00	0.0	10.0
10	Flanges/misc UHV hardware	lot	10	500.00	eu	5.0	0	0.0	0		0.00	0.0	5.0
11	LCW Hardware	ea	2	300.00	eu	0.6	0	0.0	0		0.00	0.0	0.6
12	Assemble UHV subsystems	ea	4	100.00	eu	0.4	4	20.0	80	MS	37.73	3.0	3.4
13	Survey & Calibration		0	0.00		0.0	4	16.0	64	MS	37.73	2.4	2.4
14	Pumpdown & leakcheck	lot	1	50.00	eu	0.1	1	40.0	40	MS	37.73	1.5	1.6
15	Bakout	lot	1	50.00	eu	0.1	1	80.0	80	MS	37.73	3.0	3.1
16	Assemble Positioners	ea	4	50.00	eu	0.2	4	20.0	80	MS	37.73	3.0	3.2
17	Misc. Assembly Hardware	lot	1	1000.00	eu	1.0	1	40.0	40	MS	37.73	1.5	2.5
18	Pre-installation checkout		0	0.00		0.0	1	40.0	40	MS	37.73	1.5	1.5
19	Prep for transportation	lot	1	50.00	eu	0.1	1	8.0	8	MS	37.73	0.3	0.4
** Subtotal **						44.4			1112			42.0	86.4
** WBS: 1.2.5.2.3.1.2	Monochromator												
1	Exit Slit	lot	3	18050.00	eu	54.1	3	200.0	600	MS	37.73	22.6	76.8
2	Grating Mount/Scan Mech	ea	1	49000.00	A87	49.0	1	1160.0	1160	MS	37.73	43.8	92.8
3	Grating Substrates	ea	1	2600.00	eu	2.6	1	464.0	464	MS	37.73	17.5	20.1
4	Grating Polish/Rule/Coat	ea	3	41000.00	eu	123.0	0	0.0	0		0.00	0.0	123.0
5	Vacuum System	lot	1	71850.00	eu	71.8	1	960.0	960	MS	37.73	36.2	108.1

Technical Components Cost Estimate

ITM NBR	ITM DESCRIPTION	UNIT MEAS	NBR UNITS	UNIT COST COST	COST BASIS	TOTAL ISC K$	LBR UNTS	HRS/ UNIT	TOTAL HRS	CRAFT CODE	CRAFT RATE	TOTAL LABOR K$	ISC + LABOR K$
6	Assemble & Bakeout	ea	1	1800.00	eu	1.8	1	680.0	680	MS	37.73	25.7	27.5
7	Installation	lot	1	450.00	eu	0.5	1	16.0	16	MS	37.73	0.6	1.1
8			0	0.00		0.0	1	16.0	16	ICO	70.70	1.1	1.1
9			0	0.00		0.0	1	96.0	96	MU	35.92	3.4	3.4
10	Survey & Alignment		0	0.00		0.0	1	40.0	40	MS	37.73	1.5	1.5
11	Pumps	lot	2	8250.00	eu	16.5	0	0.0	0		0.00	0.0	16.5
12	Ion Gauge Controllers	ea	1	5000.00	eu	5.0	0	0.0	0		0.00	0.0	5.0
** Subtotal **						324.4			4032			152.5	476.8
** WBS: 1.2.5.2.3.1.3	Branch Line Diagnostics												
1	Diagnostic #1	ea	1	7700.00	eu	7.7	1	208.0	208	MS	37.73	7.8	15.5
2	Diagnostic #2	ea	1	6700.00	eu	6.7	1	148.0	148	MS	37.73	5.6	12.3
3	Diagnostic #3	ea	1	6700.00	eu	6.7	1	148.0	148	MS	37.73	5.6	12.3
** Subtotal **						21.1			504			19.0	40.1
** WBS: 1.2.5.2.3.1.4	Branch Line Vacuum System												
1	4" UHV Isolation Valve	ea	4	9460.00	cp	37.8	0	0.0	0		0.00	0.0	37.8
2	6"cf Spools	ea	4	500.00	cp	2.0	0	0.0	0		0.00	0.0	2.0
3	6"cf Bellows Assembly	ea	6	2000.00	A86	12.0	0	0.0	0		0.00	0.0	12.0
4	Spool Support Posts	ea	4	500.00	eu	2.0	0	0.0	0		0.00	0.0	2.0
5	Misc UHV Hardware	lot	1	2500.00	eu	2.5	1	120.0	120	MS	37.73	4.5	7.0
6	Bakeout & Leak check	lot	1	2500.00	eu	2.5	1	120.0	120	MS	37.73	4.5	7.0
** Subtotal **						58.8			240			9.1	67.9
** WBS: 1.2.5.2.3.1.5	Branch Line Mechanical Installation												
1	Assemble/Leak check	lot	1	1000.00	eu	1.0	1	120.0	120	MS	37.73	4.5	5.5
2	Transport & setup	lot	3	200.00	eu	0.6	3	32.0	96	MU	35.92	3.4	4.0
3	Unitstrut & Misc. Hardwar	lot	1	500.00	eu	0.5	1	80.0	80	MU	35.92	2.9	3.4
4	Misc. Mechanical work	lot	1	500.00	eu	0.5	1	40.0	40	MS	37.73	1.5	2.0
5	Misc. Machine shop	lot	1	500.00	eu	0.5	1	40.0	40	MS	37.73	1.5	2.0
6	Lead Shieldng Installatn	lot	1	1000.00	eu	1.0	1	40.0	40	MU	35.92	1.4	2.4
7	Support Rail	ea	1	500.00	eu	0.5	1	120.0	120	MS	37.73	4.5	5.0
8	Survey & Alignment	lot	1	200.00	eu	0.2	1	131.0	131	MS	37.73	4.9	5.1
** Subtotal **						4.8			667			24.8	29.6
** WBS: 1.2.5.2.3.2.1	Photon Transport Controls & Diagnosticss												
1	Ion Pump Controls/Cables	lot	1	65400.00	CP	65.4	1	40.0	40	EI	33.00	1.3	66.7
2	Ion Gauges/Controls	lot	1	18300.00	eu	18.3	1	40.0	40	EI	33.00	1.3	19.6
3	Interlocks & Actuators	lot	1	5400.00	eu	5.4	1	40.0	40	EI	33.00	1.3	6.7
4	Positioning Controls	lot	1	77800.00	eu	77.8	1	80.0	80	EI	33.00	2.6	80.4
5	Optical Cleaning Controls	lot	2	10000.00	eu	20.0	1	20.0	20	EI	33.00	0.7	20.7
6	Beam Positioning Controls	ea	2	2100.00	eu	4.2	1	10.0	10	EI	33.00	0.3	4.5
** Subtotal **						191.1			230			7.6	198.7
** WBS: 1.2.5.2.3.2.2	Monochromator Controls												
1	Progrmmabl Logic Cntrllr	lot	1	8500.00	eu	8.5	1	20.0	20	EI	33.00	0.7	9.2
2			0	0.00		0.0	1	40.0	40	CP	59.40	2.4	2.4
3	Branch Line Device Server	ea	1	7800.00	cp	7.8	1	40.0	40	CP	59.40	2.4	10.2
4	Network Interface	lot	1	5000.00	eu	5.0	1	10.0	10	EI	33.00	0.3	5.3
5	Display/Control Station	ea	1	13000.00	eu	13.0	1	40.0	40	CP	59.40	2.4	15.4
6	TV Display Controls	ea	1	5900.00	eu	5.9	1	20.0	20	EI	33.00	0.7	6.6
7	24VDC Distribution	lot	1	4000.00	eu	4.0	1	60.0	60	ES	33.00	2.0	6.0
** Subtotal **						44.2			230			10.8	55.0
** WBS: 1.2.5.2.3.2.3	Branch Line Electrical Installation												
1	Racks & Trays	lot	1	3450.00	CP	3.5	1	80.0	80	EI	33.00	2.6	6.1
2	Ion Pump Interconnects	ft	600	1.00	eu	0.6	1	16.0	16	EI	33.00	0.5	1.1
3	Ion Gauge Interconnect	ft	600	2.00	eu	1.2	1	32.0	32	EI	33.00	1.1	2.3
4	Intrlck/Actuatr Intrcnnct	ft	400	3.00	eu	1.2	1	40.0	40	EI	33.00	1.3	2.5
5	Position Contrls Intrcnnc	ft	800	2.50	eu	2.0	1	40.0	40	EI	33.00	1.3	3.3

Technical Components Cost Estimate

ITM NBR	ITM DESCRIPTION	UNIT MEAS	NBR UNITS	UNIT COST	COST BASIS	TOTAL ISC K$	LBR UNTS	HRS/ UNIT	TOTAL HRS	CRAFT CODE	CRAFT RATE	TOTAL LABOR K$	ISC + LABOR K$
6	Optical Cleaning Intrcnnc	ft	200	1.00	eu	0.2	1	10.0	10	EI	33.00	0.3	0.5
** Subtotal **						8.6			218			7.2	15.8
** WBS: 1.2.5.2.3.3	Branch Line Safety Systems												
1	ILC & SBX	ea	1	1400.00	eu	1.4	0	0.0	0		0.00	0.0	1.4
2	Eurocard Crate	ea	1	800.00	eu	0.8	0	0.0	0		0.00	0.0	0.8
3	Key Panel	ea	1	300.00	cp	0.3	0	0.0	0		0.00	0.0	0.3
4	Monitor Lights Panel	ea	6	250.00	cp	1.5	0	0.0	0		0.00	0.0	1.5
5	Push Button Panel	ea	1	250.00	cp	0.2	0	0.0	0		0.00	0.0	0.2
6	Breaker Panel	ea	1	250.00	cp	0.2	0	0.0	0		0.00	0.0	0.2
7	Cables	lot	1	100.00	eu	0.1	0	0.0	0		0.00	0.0	0.1
8	Wiring Assembly		0	0.00		0.0	1	80.0	80	ES	33.00	2.6	2.6
9	Systems Test		0	0.00		0.0	1	80.0	80	EM	33.00	2.6	2.6
10	Padlocks & Misc. Hardware	lot	1	500.00	eu	0.5	0	0.0	0		0.00	0.0	0.5
** Subtotal **						5.1			160			5.3	10.4
** WBS: 1.2.5.2.3.4	Branch Line Utilities												
1	Pneumatic Service	lot	1	1500.00	eu	1.5	1	120.0	120	MU	35.92	4.3	5.8
2	LCW Service	lot	1	1500.00	eu	1.5	1	120.0	120	MU	35.92	4.3	5.8
3	Cable Trays, Conduit, etc	lot	1	2000.00	eu	2.0	1	120.0	120	PE	38.90	4.7	6.7
4	Unitstrut/Misc. Hardware	lot	1	1000.00	eu	1.0	1	40.0	40	MS	37.73	1.5	2.5
5	Double Elec. Rack	ea	1	1200.00	cp	1.2	0	16.0	0	ES	33.00	0.0	1.2
6	BA panel 3 PH 30A	ea	1	50.00	CP	0.1	1	0.5	0	ESs	0.00	0.0	0.1
7	Breaker Panel	ea	2	200.00	CP	0.4	2	4.0	8	ES	33.00	0.3	0.7
8	Plug Strip	ea	2	20.00	eu	0.0	2	1.0	2	ES	33.00	0.1	0.1
9	Rack Fans	ea	2	50.00	eu	0.1	2	1.0	2	ES	33.00	0.1	0.2
10	X-conn blocks & frame	ea	1	500.00	cp	0.5	1	24.0	24	ES	33.00	0.8	1.3
11	Relay blks & frame	ea	1	500.00	cp	0.5	1	24.0	24	ES	33.00	0.8	1.3
* Subtotal **						8.8			460			16.8	25.6
** WBS: 1.2.5.2.3.5	Branch Line Mech/Elect System Integration												
1	Controls Checkout/Debug		0	0.00		0.0	6	16.0	96	MT	27.85	2.7	2.7
2			0	0.00		0.0	6	16.0	96	EM	33.00	3.2	3.2
3			0	0.00		0.0	6	16.0	96	CP	59.40	5.7	5.7
4			0	0.00		0.0	6	16.0	96	EI	33.00	3.2	3.2
5	Safety Systems Checkout		0	0.00		0.0	4	8.0	32	MT	27.85	0.9	0.9
6			0	0.00		0.0	4	8.0	32	EM	33.00	1.1	1.1
7			0	0.00		0.0	4	8.0	32	EI	33.00	1.1	1.1
8	Vacuum System Checks		0	0.00		0.0	4	16.0	64	MT	27.85	1.8	1.8
9			0	0.00		0.0	4	16.0	64	EM	33.00	2.1	2.1
10	Misc. Hardware	lot	1	1000.00	eu	1.0	1	40.0	40	MS	37.73	1.5	2.5
** Subtotal **						1.0			648			23.1	24.1
** WBS: 1.2.5.2.3.6	Scanning Microscope Station												
1	Sperical Mirrors		2	10500.00		21.0	0	0.0	0		0.00	0.0	21.0
2	Mirror mount/steer system		2	26250.00		52.5	0	0.0	0		0.00	0.0	52.5
3	Multilayer substates/ctng		1	52500.00		52.5	0	0.0	0		0.00	0.0	52.5
4	M'layer mountng/steering		1	26250.00		26.2	0	0.0	0		0.00	0.0	26.2
5	Part cost:support structr		1	31500.00		31.5	0	0.0	0		0.00	0.0	31.5
6	Building modifications		1	21000.00		21.0	0	0.0	0		0.00	0.0	21.0
7	Smpl stage/environ cntrl		1	10500.00		10.5	0	0.0	0		0.00	0.0	10.5
8	Smpl trgttng microscp sys		1	21000.00		21.0	0	0.0	0		0.00	0.0	21.0
9	White lite interferometer		1	5250.00		5.2	0	0.0	0		0.00	0.0	5.2
10	Piezoelctrc scan motion		1	21000.00		21.0	0	0.0	0		0.00	0.0	21.0
11	Position meas intrfrmtr		1	15750.00		15.8	0	0.0	0		0.00	0.0	15.8
12	Interferometer electronic		1	5250.00		5.2	0	0.0	0		0.00	0.0	5.2
13	Computing sys & interfacs		1	42000.00		42.0	0	0.0	0		0.00	0.0	42.0
14	Part cost:image system		1	26250.00		26.2	0	0.0	0		0.00	0.0	26.2
15	Granite table		1	15750.00		15.8	0	0.0	0		0.00	0.0	15.8
16	Microfab:zone plts/wndws		1	68250.00		68.2	0	0.0	0		0.00	0.0	68.2
17	Software & controls		1	61950.00		62.0	0	0.0	0		0.00	0.0	62.0
18	Vacuum hardware		1	43000.00		43.0	0	0.0	0		0.00	0.0	43.0

Technical Components Cost Estimate

ITM NBR	ITM DESCRIPTION	UNIT MEAS	NBR UNITS	UNIT COST COST BASIS	TOTAL ISC K$	LBR UNTS	HRS/ UNIT	TOTAL HRS	CRAFT CODE	CRAFT RATE	TOTAL LABOR K$	ISC LABOR K$
19	Electronics & interfaces		1	26250.00	26.2	0	0.0	0		0.00	0.0	26.2
** Subtotal **					567.0			0			0.0	567.0
** WBS: 1.3.1.1	Conventional Facilities EDI:LBL											
1	Engineering	lot	1	104850.00 eu	104.8	0	0.0	0		0.00	0.0	104.8
2	Consultants	lot	1	16000.00 eu	16.0	0	0.0	0		0.00	0.0	16.0
3	Inspection	lot	1	48000.00 eu	48.0	0	0.0	0		0.00	0.0	48.0
** Subtotal **					168.8			0			0.0	168.8
** WBS: 1.3.1.2	Conventional Facilities EDI:A/E											
1	Title I	lot	1	100000.00 eu	100.0	0	0.0	0		0.00	0.0	100.0
2	Title II	lot	1	180000.00 eu	180.0	0	0.0	0		0.00	0.0	180.0
3	Title III	lot	1	95000.00 eu	95.0	0	0.0	0		0.00	0.0	95.0
** Subtotal **					375.0			0			0.0	375.0
** WBS: 1.3.2	Office/Light Lab Construction											
1	Concrete	lot	1	26790.00 K/G	26.8	0	0.0	0		0.00	0.0	26.8
2	Metals	lot	1	162030.00 K/G	162.0	0	0.0	0		0.00	0.0	162.0
3	Wood and Plastics	lot	1	42240.00 K/G	42.2	0	0.0	0		0.00	0.0	42.2
4	Thermal/Moisture Protctn	lot	1	41030.00 K/G	41.0	0	0.0	0		0.00	0.0	41.0
5	Doors/Windows	lot	1	133350.00 K/G	133.3	0	0.0	0		0.00	0.0	133.3
6	Finishes	lot	1	404130.00 K/G	404.1	0	0.0	0		0.00	0.0	404.1
7	Specialties	lot	1	22540.00 K/G	22.5	0	0.0	0		0.00	0.0	22.5
8	Equipment	lot	1	3000.00 K/G	3.0	0	0.0	0		0.00	0.0	3.0
9	Furnishings	lot	1	15450.00 K/G	15.4	0	0.0	0		0.00	0.0	15.4
10	Conveying Systems	lot	1	140000.00 K/G	140.0	0	0.0	0		0.00	0.0	140.0
11	Mechanical: Plumbing	lot	1	285990.00 K/G	286.0	0	0.0	0		0.00	0.0	286.0
12	Mechanical: HVAC	lot	1	496770.00 K/G	496.8	0	0.0	0		0.00	0.0	496.8
13	Mechanical: Fire Protctn	lot	1	52200.00 K/G	52.2	0	0.0	0		0.00	0.0	52.2
14	Electrical	lot	1	239800.00 K/G	239.8	0	0.0	0		0.00	0.0	239.8
15	General Cndtns/Mobilize	lot	1	103270.00 K/G	103.3	0	0.0	0		0.00	0.0	103.3
16	Bond	lot	1	43370.00 K/G	43.4	0	0.0	0		0.00	0.0	43.4
17	Prime Cntrctr OH & Fee	lot	1	303600.00 K/G	303.6	0	0.0	0		0.00	0.0	303.6
** Subtotal **					2515.6			0			0.0	2515.6
** WBS: 1.3.3	Special Building Facilities											
1	Laboratory Benches	lot	1	108000.00 eu	108.0	0	0.0	0		0.00	0.0	108.0
2	Chemical Storage Cabinets	lot	1	9000.00 eu	9.0	0	0.0	0		0.00	0.0	9.0
3	Fume Hoods	lot	1	51000.00 eu	51.0	0	0.0	0		0.00	0.0	51.0
4	Laminar Flow Hoods	lot	1	30000.00 eu	30.0	0	0.0	0		0.00	0.0	30.0
5	Acid Neutralization Sys	lot	1	3430.00 eu	3.4	0	0.0	0		0.00	0.0	3.4
6	UHV Workstations	lot	1	30000.00 eu	30.0	0	0.0	0		0.00	0.0	30.0
7	De-mntable Office Frnture	lot	1	140000.00 eu	140.0	0	0.0	0		0.00	0.0	140.0
8	General Condtions/Mobiliz	lot	1	18570.00 eu	18.6	0	0.0	0		0.00	0.0	18.6
9	Bond	lot	1	7800.00 eu	7.8	0	0.0	0		0.00	0.0	7.8
10	Prime Cntrctr OH & Fee	lot	1	54600.00 eu	54.6	0	0.0	0		0.00	0.0	54.6
** Subtotal **					452.4			0			0.0	452.4
** WBS: 1.3.4	Electrical Switchgear/Utilities											
1	Transfrmr Switchgr Equip	lot	1	475000.00 eu	475.0	0	0.0	0		0.00	0.0	475.0
2	Ethernet Distribution	lot	1	65000.00 eu	65.0	0	0.0	0		0.00	0.0	65.0
3	General Cndtns/Mobilize	lot	1	27000.00 eu	27.0	0	0.0	0		0.00	0.0	27.0
4	Bond	lot	1	11340.00 eu	11.3	0	0.0	0		0.00	0.0	11.3
5	Prime Cntrctr OH & Fee	lot	1	79380.00 eu	79.4	0	0.0	0		0.00	0.0	79.4
** Subtotal **					657.7			0			0.0	657.7
** WBS: 1.3.5	Standard Equipment											
1	Laboratory Furniture	lot	1	25960.00 eu	26.0	0	0.0	0		0.00	0.0	26.0
2	Office Furniture	lot	1	66500.00 eu	66.5	0	0.0	0		0.00	0.0	66.5
3	Office Equipment	lot	1	13000.00 eu	13.0	0	0.0	0		0.00	0.0	13.0

Technical Components Cost Estimate

ITM NBR	ITM DESCRIPTION	UNIT MEAS	NBR UNITS	UNIT COST COST BASIS	TOTAL ISC K$	LBR UNTS	HRS/ UNIT	TOTAL HRS	CRAFT CODE	CRAFT RATE	TOTAL LABOR K$	ISC + LABOR K$
4	Storage,Handling,Delivery	lot	1	5270.00 eu	5.3	0	0.0	0		0.00	0.0	5.3
** Subtotal **					110.7			0			0.0	110.7
** WBS: 1.4.1		Project Management										
1	Project Management	lot	1	436500.00 eu	436.5	0	0.0	0		0.00	0.0	436.5
** Subtotal **					436.5			0			0.0	436.5
** WBS: 1.4.2		Beamline Systems										
1	ALS Beamline Systems	lot	1	6392000.00 eu	6392.0	0	0.0	0		0.00	0.0	6392.0
** Subtotal **					6392.0			0			0.0	6392.0
** WBS: 1.4.3		Conventional Facilities										
1	Conventional Facilities	lot	1	750000.00 eu	750.0	0	0.0	0		0.00	0.0	750.0
** Subtotal **					750.0			0			0.0	750.0
*** Total ***					26774.2			320214			13632.3	40406.5

DISCLAIMER

This document was prepared as an account of work sponsored by the United States Government. While this document is believed to contain correct information, neither the United States Government nor any agency thereof, nor The Regents of the University of California, nor any of their employees, makes any warranty, express or implied, or assumes any legal responsibility for the accuracy, completeness, or usefulness of any information, apparatus, product, or process disclosed, or represents that its use would not infringe privately owned rights. Reference herein to any specific commercial product, process, or service by its trade name, trademark, manufacturer, or otherwise, does not necessarily constitute or imply its endorsement, recommendation, or favoring by the United States Government or any agency thereof, or The Regents of the University of California. The views and opinions of authors expressed herein do not necessarily state or reflect those of the United States Government or any agency thereof, or The Regents of the University of California.

Lawrence Berkeley Laboratory is an equal opportunity employer.