PUB-608 c.1

Lawrence Berkeley Laboratory
UNIVERSITY OF CALIFORNIA

Office for Planning and Development

RECEIVED
LAWRENCE
BERKELEY LABORATORY

JUL 20 1987

LIBRARY AND
DOCUMENTS SECTION

PATENT LICENSING OPPORTUNITIES AT THE LAWRENCE BERKELEY LABORATORY

March 1987

For Reference

Not to be taken from this room

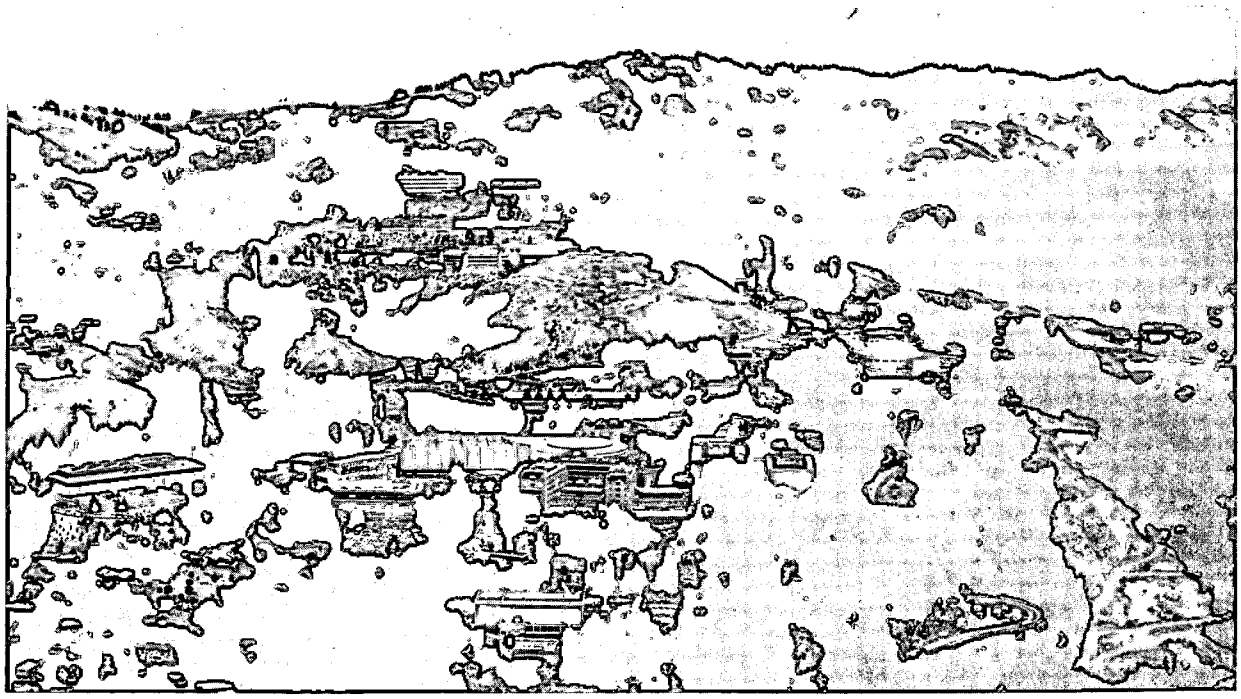

PUB-608 c.1

Prepared for the U.S. Department of Energy under Contract DE-AC03-76SF00098

DISCLAIMER

This document was prepared as an account of work sponsored by the United States Government. While this document is believed to contain correct information, neither the United States Government nor any agency thereof, nor the Regents of the University of California, nor any of their employees, makes any warranty, express or implied, or assumes any legal responsibility for the accuracy, completeness, or usefulness of any information, apparatus, product, or process disclosed, or represents that its use would not infringe privately owned rights. Reference herein to any specific commercial product, process, or service by its trade name, trademark, manufacturer, or otherwise, does not necessarily constitute or imply its endorsement, recommendation, or favoring by the United States Government or any agency thereof, or the Regents of the University of California. The views and opinions of authors expressed herein do not necessarily state or reflect those of the United States Government or any agency thereof or the Regents of the University of California.

PUB-608

PATENT LICENSING OPPORTUNITIES

at the

LAWRENCE BERKELEY LABORATORY

Office for Planning and Development

Lawrence Berkeley Laboratory
University of California
Berkeley, California 94720

March 1987

This work was supported by the U.S. Department of Energy under Contract No. DE-AC03-76SF00098.

Table of Contents

		Page
Introduction		1
Patents Available for Licensing		
Process for Removal of Ammonia and Acid Gases from Contaminated Waters (King/MacKenzie)	4,547,293 (Oct. 15, 1985)	5
Magnetic Fluorescent Lamp Having Reduced Ultraviolet Self-Absorption (Berman/Richardson) UC	4,549,110 (Oct. 22, 1985)	6
Permanent Magnet Multipole with Adjustable Strength (Halbach)	4,549,155 (Oct. 22, 1985)	7
Removal of Arsenic Compounds from Spent Catecholated Polymer (Fish)	4,552,854 (Nov. 12, 1985)	8
Method and Apparatus for Making Superconductive Magnetic Coils (Borden)	4,554,731 (Nov. 26, 1985)	9
Point Sensitive NMR Imaging System Using a Magnetic Field Configuration with a Spatial Minimum (Eberhard)	4,556,848 (Dec. 3, 1985)	10
Superheated Fuel Injection for Combustion of Liquid-Solid Slurries (Robben)	4,558,664 (Dec. 17, 1985)	11
Three Chamber Negative Ion Source (Leung/Ehlers/Hiskes)	4,559,477 (Dec. 17, 1985)	12
Thermal Well-Test Method (Tsang/Doughty)	4,559,818 (Dec. 24, 1985)	13
Broad-Band Beam Buncher (Goldberg/Flood/Arthur/Voelker)	4,567,452 (Jan. 28, 1986)	14
Drag Bit Construction (Hood) UC	4,569,558 (Feb. 11, 1986)	15
Push-Pull Betatron Pair (Kerst)	4,577,156 (Mar. 18, 1986)	16
Radiofrequency Amplifier Based on a DC Superconducting Quantum Interference Device (Hilbert/Martinis/Clarke)	4,585,999 (Apr. 29, 1986)	17
Selective Radiative Cooling with MGO and/or LIF Layers (Berdahl)	4,586,350 (May 6, 1986)	18
Transverse Field Focused System (Anderson)	4,588,955 (May 13, 1986)	19

Germanium Detector Passivated with Hydrogenated Amorphous Germanium (Hansen/Haller)	4,589,006 (May 13, 1986)	20
Photothermal Method for In Situ Microanalysis of the Chemical Composition of Coal Samples (Amer)	4,591,718 (May 27, 1986)	21
Apparatus for Converting Biomass to a Pumpable Slurry (Ergun/Schaleger/Wrathall/Yaghoubzadeh)	4,597,832 (July 1, 1986)	22
Oxygen Analyzer (Benner)	4,601,882 (July 22, 1986)	23
Removal of Arsenic, Vanadium, and/or Nickel Compounds from Petroliferous Liquids (Fish)	4,604,191 (Aug. 5, 1986)	24
Electrochemical Devices Utilizing Molten Alkali Metal Electrode–Reactant (Hitchcock/Mailhe/De Jonghe)	4,609,596 (Sept. 2, 1986)	25
Liquid–Film Electron Stripper (Gavin)	4,626,691 (Dec. 2, 1986)	26

INTRODUCTION

The Lawrence Berkeley Laboratory (LBL) carries out a multifaceted research program, from basic studies of the nature of the atom and the cell to the development of advanced materials, new instruments, and new energy sources. Some research groups at the Laboratory, such as the Center for Advanced Materials, focus on research with direct applications to the needs of industry.

The Laboratory has a long history of invention and development, beginning with the work of its founder, Ernest O. Lawrence, in particle accelerators. Its programs reflect a strong tradition of basic scientific research, coupled with excellence in engineering. Through five decades of scientific leadership, LBL has earned an international reputation and nine Nobel Prizes — the most recent in 1986.

A national laboratory managed by the University of California for the U.S. Department of Energy, LBL is located on a 130-acre hillside site adjacent to the UC Berkeley campus. Its close proximity to the Berkeley campus helps promote an atmosphere conducive to innovative science. Over 170 faculty members in physical, biological, and engineering sciences hold dual appointments at the Laboratory, and more than 600 graduate students are active in LBL research programs. LBL is a leader among national laboratories in graduate and postdoctoral training in physical and life sciences.

In response to the increasing technical and economic demands that confront the nation, the Laboratory has defined as its role the provision of national scientific leadership and the support of technological innovation through its mission to:

- Perform leading multidisciplinary research in the general sciences and energy sciences.
- Develop and operate unique national experimental facilities for use by qualified investigators.
- Educate and train future generations of scientists and engineers.
- Foster productive relationships between LBL research programs and industry. (The Center for Advanced Materials, the Center for X-ray Optics, and the Center for Building Sciences are examples of programs specifically developed with industry, and the utilization of other research is supported through technology transfer programs.)

The following areas of research excellence implement LBL's mission and provide current focus for achieving national goals.

General Sciences

- Accelerator and Fusion Research — accelerator design and operation, advanced accelerator technology development, accelerator and ion source research for heavy-ion fusion and magnetic fusion, and x-ray optics;

- Nuclear Science — relativistic heavy-ion physics, medium- and low-energy nuclear physics, nuclear theory, nuclear astrophysics, nuclear chemistry, transuranium elements studies, nuclear data evaluation, and detector development;

- Physics — experimental and theoretical particle physics, detector development, astrophysics, and applied mathematics;

Energy Sciences

- Applied Science — building energy efficiency, solar for building systems, fossil energy conversion, energy storage, and atmospheric effects of combustion;

- Biology and Medicine — molecular and cellular biology, diagnostic imaging, radiation biophysics, therapy and radiosurgery, mutagenesis and carcinogenesis, lipoproteins, cardiovascular disease, and hemopoiesis research;

- Chemical Biodynamics — molecular biology of nucleic acids and proteins, genetics of photosynthesis, and photochemistry;

- Earth Sciences — continental lithosphere properties, structures and behavior, and transport processes in geologic systems; and

- Materials and Chemical Science — microstructures, electron microscopy, surfaces, and interfaces; solid-state and atomic physics; chemical energy, chemical physics, reaction dynamics, catalysts, electronic materials, ceramic and metal interfaces, polymer research, instrumentation, and metallic alloys.

Research and support activities conducted by LBL's Information and Computing Sciences and Engineering Divisions are central to the achievement of the Laboratory's goals. These divisions provide essential computational, instrumentation, and fabrication capability that strengthen the unique role of this national Laboratory. The Laboratory's effectiveness is based on the multidisciplinary capability of its staff, its beneficial interactions with universities and industry, and the scientific and technical value of its programs and research facilities.

The technical expertise within the Laboratory extends into many fields, and many firms have already made use of the expertise and facilities available. In most cases, firms can obtain advance waivers of patent rights for any inventions developed in the course of sponsored work.

The following section consists of abstracts from patents presently available for exclusive and nonexclusive licensing. Interested parties may confer with the inventor and inspect the data and apparatus.

For more information about our patent, license, and research programs, contact:

Robert W. Mulcahy
Patent Department
M.S. 50F
Lawrence Berkeley Laboratory
Berkeley, CA 94720 (415) 486-6503

or

Robert J. Morris
Office for Planning & Development
M.S. 50A-4112
Lawrence Berkeley Laboratory
Berkeley, CA 94720 (415) 486-6502

United States Patent [19]

King et al.

[11] **Patent Number: 4,547,293**

[45] **Date of Patent: Oct. 15, 1985**

[54] **PROCESS FOR REMOVAL OF AMMONIA AND ACID GASES FROM CONTAMINATED WATERS**

[75] Inventors: **C. Judson King**, Kensington; **Patricia D. MacKenzie**, Berkeley, both of Calif.

[73] Assignee: **The United States of America as represented by the United States Department of Energy**, Washington, D.C.

[21] Appl. No.: **645,657**

[22] Filed: **Aug. 30, 1984**

Related U.S. Application Data

[63] Continuation of Ser. No. 414,544, Sep. 3, 1982, abandoned.

[51] **Int. Cl.**[4] **B01D 19/00**; B01D 13/00

[52] **U.S. Cl.** **210/638**; 55/37; 55/70; 210/643

[58] **Field of Search** 55/37, 70; 210/638, 210/639, 643

[56] **References Cited**

U.S. PATENT DOCUMENTS

3,620,674	11/1971	Renault et al.	423/356
3,649,190	3/1972	Deschamps et al.	423/356
3,649,220	3/1972	Powell et al.	210/638 X
3,676,106	7/1972	Hazen	210/638 X
3,779,907	12/1973	Li et al.	210/638
3,969,265	7/1976	Singhal et al.	210/643 X
4,029,744	6/1977	Li et al.	210/638 X
4,064,040	12/1977	Singhal et al.	210/638
4,235,713	11/1980	Diaz Nogueira et al.	210/638
4,287,071	9/1981	DiGiacomo	210/643
4,334,999	6/1982	Cornwell	210/638
4,360,448	11/1982	Li et al.	210/643 X

OTHER PUBLICATIONS

Cahn et al., "Removal of Ammonium Sulfide from Wastewater by Liquid Membrane Process", Environmental Science & Technology, 12, 1051-1055, (1978).

Primary Examiner—Robert Spitzer

Attorney, Agent, or Firm—Harold M. Dixon; Roger S. Gaither; Judson R. Hightower

[57] **ABSTRACT**

Contaminating basic gases, i.e., ammonia, and acid gases, e.g., carbon dioxide, are removed from process waters or waste waters in a combined extraction and stripping process. Ammonia in the form of ammonium ion is extracted by an immiscible organic phase comprising a liquid cation exchange component, especially an organic phosphoric acid derivative, and preferably di-2-ethyl hexyl phosphoric acid, dissolved in an alkyl hydrocarbon, aryl hydrocarbon, higher alcohol, oxygenated hydrocarbon, halogenated hydrocarbon, and mixtures thereof. Concurrently, the acidic gaseous contaminants are stripped from the process or waste waters by stripping with steam, air, nitrogen, or the like. The liquid cation exchange component has the ammonia stripped therefrom by heating, and the component may be recycled to extract additional amounts of ammonia.

8 Claims, No Drawings

United States Patent [19]

Berman et al.

[11] **Patent Number: 4,549,110**

[45] **Date of Patent: Oct. 22, 1985**

[54] **MAGNETIC FLUORESCENT LAMP HAVING REDUCED ULTRAVIOLET SELF-ABSORPTION**

[75] Inventors: **Samuel M. Berman**, San Francisco, Calif.; **Robert W. Richardson**, Pelham, N.Y.

[73] Assignee: **The United States of America as represented by the Department of Energy**, Washington, D.C.

[21] Appl. No.: **566,849**

[22] Filed: **Dec. 29, 1983**

[51] **Int. Cl.**[4] **H01J 61/38**; H05B 31/28

[52] **U.S. Cl.** **313/485**; 313/161; 315/347

[58] **Field of Search** 313/485, 486, 160, 161, 313/156; 315/260, 262, 264, 338, 344, 347

[56] **References Cited**

U.S. PATENT DOCUMENTS

3,521,120	7/1970	Anderson	315/57
4,177,401	12/1979	Yamane et al.	313/485
4,187,446	2/1980	Gross et al.	315/58
4,311,942	1/1982	Skeist et al.	315/62
4,311,943	1/1982	Gross et al.	315/70
4,316,121	2/1982	Hammer et al.	315/62
4,341,977	7/1982	Gross et al.	313/485
4,341,979	7/1982	Gross et al.	315/57
4,386,296	5/1983	Beck	315/53

OTHER PUBLICATIONS

Watanabe et al., "Multichannel Discharges in Low-Pressure Rate-Gas-Mercury Mixtures Caused by Anode Oscillation," J. Appl. Phys. vol. 51, No. 12, 12/80, pp. 6124-6129.

Richardson et al., "Theory of the Effects of Magnetic Fields and Isotope Enrichment of the Radiant Emittance of the Hg-Ar Discharge", Lawrence Berkeley Laboratory, University of CA, Lighting System Research, 1983.

Hollister et al., "Experimental Studies of Enhanced Emittance by Zeeman Splitting of a Low Pressure Hg/Ar Discharge", Ibid., 1983.

Sun et al., "Experimental Studies of Enhanced Emittance by Isotope Enrichment of a Low Pressure Hg/Ar Discharge", Ibid., 1983.

Primary Examiner—David K. Moore
Assistant Examiner—K. Wieder
Attorney, Agent, or Firm—Clifton E. Clouse, Jr.; Roger S. Gaither; Judson R. Hightower

[57] **ABSTRACT**

The radiant emission of a mercury-argon discharge in a fluorescent lamp assembly (**10**) is enhanced by providing means (**30**) for establishing a magnetic field with lines of force along the path of electron flow through the bulb (**12**) of the lamp assembly, to provide Zeeman splitting of the ultraviolet spectral line. Optimum results are obtained when the magnetic field strength causes a Zeeman splitting of approximately 1.7 times the thermal line width.

9 Claims, 5 Drawing Figures

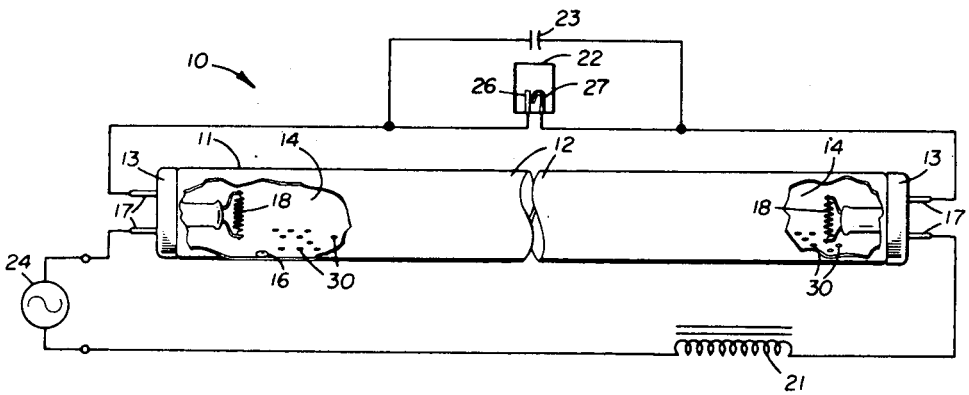

United States Patent [19]

Halbach

[11] **Patent Number: 4,549,155**

[45] **Date of Patent: Oct. 22, 1985**

[54] **PERMANENT MAGNET MULTIPOLE WITH ADJUSTABLE STRENGTH**

[75] Inventor: **Klaus Halbach**, Berkeley, Calif.

[73] Assignee: **The United States of America as represented by the United States Department of Energy**, Washington, D.C.

[21] Appl. No.: **420,433**

[22] Filed: **Sep. 20, 1982**

[51] **Int. Cl.**[4] **H01F 1/00**

[52] **U.S. Cl.** **335/212**; 335/304; 335/306

[58] **Field of Search** 335/302, 306, 301, 304, 335/210, 212

[56] **References Cited**

U.S. PATENT DOCUMENTS

2,895,092	7/1959	Cluwen	335/304
3,768,054	10/1973	Neugebauer	335/304
3,781,736	12/1973	Parker	335/304

Primary Examiner—George Harris

Attorney, Agent, or Firm—Patrick T. King; Clifton E. Clouse, Jr.; Judson R. Hightower

[57] **ABSTRACT**

Two or more magnetically soft pole pieces are symmetrically positioned along a longitudinal axis to provide a magnetic field within a space defined by the pole pieces. Two or more permanent magnets are mounted to an external magnetically-soft cylindrical sleeve which rotates to bring the permanent magnets into closer coupling with the pole pieces and thereby adjustably control the field strength of the magnetic field produced in the space defined by the pole pieces. The permanent magnets are preferably formed of rare earth cobalt (REC) material which has a high remanent magnetic field and a strong coercive force. The pole pieces and the permanent magnets have corresponding cylindrical surfaces which are positionable with respect to each other to vary the coupling therebetween. Auxiliary permanent magnets are provided between the pole pieces to provide additional magnetic flux to the magnetic field without saturating the pole pieces.

9 Claims, 4 Drawing Figures

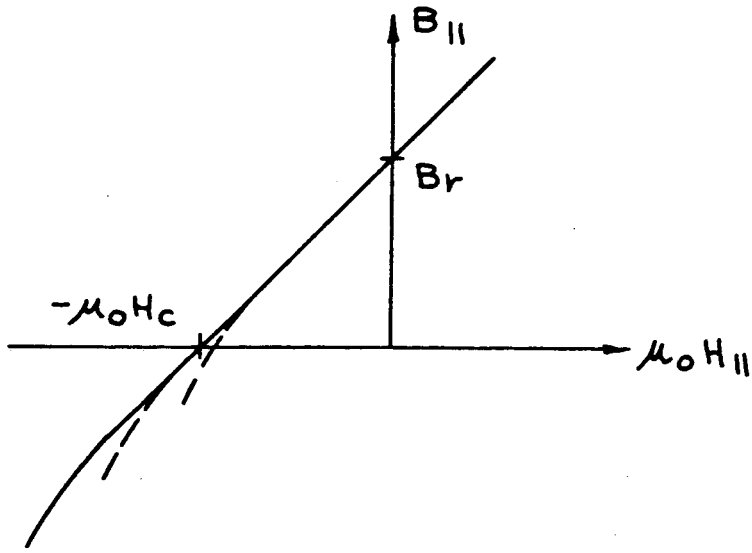

United States Patent [19]

Fish

[11] **Patent Number: 4,552,854**

[45] **Date of Patent: Nov. 12, 1985**

[54] **REMOVAL OF ARSENIC COMPOUNDS FROM SPENT CATECHOLATED POLYMER**

[75] Inventor: **Richard H. Fish**, Berkeley, Calif.

[73] Assignee: **The United States of America as represented by the United States Department of Energy**, Washington, D.C.

[21] Appl. No.: **699,886**

[22] Filed: **Feb. 8, 1985**

Related U.S. Application Data

[62] Division of Ser. No. 597,627, Apr. 6, 1984, Pat. No. 4,518,490.

[51] **Int. Cl.**[4] **B01J 31/40**

[52] **U.S. Cl.** ..... **502/26**; 502/25; 502/33; 502/514; 502/516; 208/251 R

[58] **Field of Search** ..... 502/514, 516, 20, 22, 502/25, 26, 29, 33; 208/251 R

[56] **References Cited**

U.S. PATENT DOCUMENTS

2,955,089	10/1960	Gleim	502/514
3,197,416	7/1965	Bergman et al.	502/516
3,483,137	12/1969	Sensel	502/25
4,018,705	4/1977	Carlson et al.	502/25
4,038,208	7/1977	Knifton	502/22
4,190,554	2/1980	Yamauchi et al.	502/25

Primary Examiner—D. E. Gantz
Assistant Examiner—Anthony McFarlane
Attorney, Agent, or Firm—Harold M. Dixon; Roger S. Gaither; Judson R. Hightower

[57] **ABSTRACT**

Described is a process for removing arsenic from petroliferous derived liquids by contacting said liquid at an elevated temperature with a divinylbenzene-crosslinked polystyrene having catechol ligands anchored thereon.

Also, described is a process for regenerating spent catecholated polystyrene by removal of the arsenic bound to it from contacting petroliferous liquid as described above and involves:

a. treating said spent catecholated polystyrene, at a temperature in the range of about 20° to 100° C. with an aqueous solution of at least one carbonate and/or bicarbonate of ammonium, alkali and alkaline earth metals, said solution having a pH between about 8 and 10 and,

b. separating the solids and liquids from each other. Preferably the regeneration treatment is in two steps wherein step (a) is carried out with an aqueous alcoholic carbonate solution containing lower alkyl alcohol, and, steps (a) and (b) are repeated using a bicarbonate.

10 Claims, No Drawings

United States Patent [19]

Borden

[11] **Patent Number: 4,554,731**

[45] **Date of Patent: Nov. 26, 1985**

[54] **METHOD AND APPARATUS FOR MAKING SUPERCONDUCTIVE MAGNET COILS**

[75] Inventor: **Albert R. Borden**, El Cerrito, Calif.

[73] Assignee: **The United States of America as represented by the United States Department of Energy**, Washington, D.C.

[21] Appl. No.: **549,379**

[22] Filed: **Nov. 7, 1983**

[51] **Int. Cl.**[4] **H01F 7/06**

[52] **U.S. Cl.** **29/605**; 29/599; 29/738; 29/760; 336/197

[58] **Field of Search** 29/605, 599, 738, 745, 29/760; 335/213, 216; 336/197; 242/72.1

[56] **References Cited**

U.S. PATENT DOCUMENTS

1,281,861	10/1918	Sibley	242/72.1
2,013,764	9/1955	Putnam	29/605
2,614,588	10/1952	Laycock	140/92.2
2,733,873	2/1956	Petersen	242/72.1
3,086,562	4/1963	Price	140/92.2
3,270,304	8/1966	Hoppie	335/216
3,672,026	6/1972	Cutler et al.	29/605
3,866,847	2/1975	Droll	242/72.1
4,271,585	6/1981	Satti	335/216

FOREIGN PATENT DOCUMENTS

97715	8/1979	Japan	29/605

OTHER PUBLICATIONS

"Magnet Failures Imperil New Accelerator," Science, vol. 210, Nov. 21, 1980, pp. 875-878.

"Balky Proton Smasher," Science, N.Y. Times, vol. 130, 11/28/80.

"Alternative Isabelle Magnet Model Tested," Currents, Newsletter of Lawrence Berkeley Laboratory, Univ. of Calif., vol. 8, No. 19, May 22, 1981.

Taylor, C. et al., "Design of Epoxy-Free Superconducting Dipole Magnets & Performance in both Helium I & Pressurized Helium II," LBL-12455, IEEE Transactions on Magnetics, vol. MAG-17, No. 5, Sep. 1981.

Taylor, C. et al., "Alternative Dipole Magnets for Isabelle," presented at 9th International Cryogenic Engineering Conference, Kobe, Japan, May 11-14, 1982.

Annual Report, Accelerator & Fusion Research Division, Lawrence Berkeley Laboratory, University of California, Apr. 1982, LBL-14230, pp. 15-18.

Taylor, C. et al., "High Field Superconducting Accelerator Magnets," LBL 14400, May 1982, presented at Ninth International Cryogenic Engineering Conference, Kobe, Japan, May 11-14, 1982.

Primary Examiner—Howard N. Goldberg
Assistant Examiner—P. W. Echols
Attorney, Agent, or Firm—L. E. Carnahan; Roger S. Gaither; Judson R. Hightower

[57] **ABSTRACT**

A curved, shell-type magnet coil, adapted to be used in a superconducting magnet, is wound by providing a mandrel having a tubular cylindrical mid-portion terminating at both ends in tapered end portions formed with longitudinal slots having flexible fingers therebetween. An elongated electrical conductor is wound around an elongated oval-shaped pole island engaged with the outside of the cylindrical mid-portion, to form a multiplicity of oval-shaped turns engaged with a 180-degree segment of the mandrel. The coil turns have longitudinal portions with curved portions therebetween, engaging the tapered end portions of the mandrel. Upon completion of the winding, tapered expansion members are fully inserted into the tapered end portions, to displace the flexible fingers outwardly into a cylindrical form and to displace the curved portions of the turns into a shape conforming to such cylindrical form while also exerting increased tension upon the turns to minimize draping of the turns and to enhance the mechanical integrity of the coil. A half cylinder clamp may then be employed to clamp the coil, whereupon the coil may be solified by the use of an epoxy adhesive.

13 Claims, 3 Drawing Figures

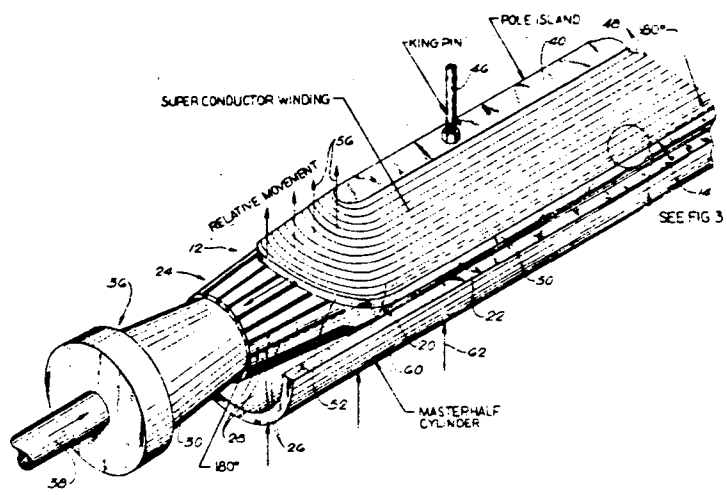

United States Patent [19]

Eberhard

[11] **Patent Number: 4,556,848**

[45] **Date of Patent: Dec. 3, 1985**

[54] **POINT SENSITIVE NMR IMAGING SYSTEM USING A MAGNETIC FIELD CONFIGURATION WITH A SPATIAL MINIMUM**

[75] Inventor: **Philippe H. Eberhard**, El Cerrito, Calif.

[73] Assignee: **The United States of America as represented by the United States Department of Energy**, Washington, D.C.

[21] Appl. No.: **462,816**

[22] Filed: **Feb. 1, 1983**

[51] **Int. Cl.**[4] **G01R 33/08**

[52] **U.S. Cl.** **324/309**; 324/307

[58] **Field of Search** 324/300, 307, 309, 319, 324/320

[56] **References Cited**

U.S. PATENT DOCUMENTS

3,932,805	1/1976	Abe	324/309
4,015,196	3/1977	Moore et al.	324/309
4,021,726	5/1977	Garroway	324/309
4,070,611	1/1978	Ernst	324/309
4,115,730	9/1978	Mansfield	324/309
4,315,216	2/1982	Clow	324/309
4,322,684	3/1982	Hounsfield	324/309

OTHER PUBLICATIONS

Damadian et al., "NMR in Cancer: XVI Fonar Image of the Live Human Body," Physiol. Chem. & Phys., 9, pp. 97-100, (1977).

Bornell et al., "Positron Tomography and Nuclear Magnetic Resonance Imaging", Science vol. 215, pp. 619-626, Feb. 5, 1982.

I. A. Pykett, "NMR Imaging in Medicine", pp. 78-88, Scientific Amer., May 1982.

Primary Examiner—Michael J. Tokar

Attorney, Agent, or Firm—Clifton E. Clouse, Jr; Roger S. Gaither; Judson R. Hightower

[57] **ABSTRACT**

A point-sensitive NMR imaging system (**10**) in which a main solenoid coil (**11**) produces a relatively strong and substantially uniform magnetic field and a pair of perturbing coils (PZ1 and PZ2) powered by current in the same direction superimposes a pair of relatively weak perturbing fields on the main field to produce a resultant point of minimum field strength at a desired location in a direction along the Z-axis. Two other pairs of perturbing coils (PX1, PX2; PY1, PY2) superimpose relatively weak field gradients on the main field in directions along the X- and Y-axes to locate the minimum field point at a desired location in a plane normal to the Z-axes. An RF generator (**22**) irradiates a tissue specimen in the field with radio frequency energy so that desired nuclei in a small volume at the point of minimum field strength will resonate.

10 Claims, 1 Drawing Figure

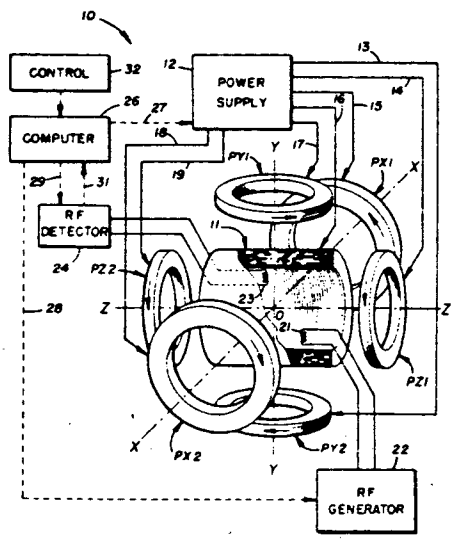

United States Patent [19]

Robben

[11] **Patent Number: 4,558,664**

[45] **Date of Patent: Dec. 17, 1985**

[54] **SUPERHEATED FUEL INJECTION FOR COMBUSTION OF LIQUID-SOLID SLURRIES**

[75] Inventor: **Franklin A. Robben**, Berkeley, Calif.

[73] Assignee: **The United States of America as represented by the United States Department of Energy**, Washington, D.C.

[21] Appl. No.: **662,658**

[22] Filed: **Oct. 19, 1984**

[51] **Int. Cl.**[4] **F02B 45/02**

[52] **U.S. Cl.** **123/23**; 110/261; 431/11

[58] **Field of Search** 123/23, 254; 110/261, 110/263; 431/11, 157

[56] **References Cited**

U.S. PATENT DOCUMENTS

2,625,141	1/1953	Berlyn	123/25
2,669,509	2/1954	Sellers	48/206
3,229,651	1/1966	Wasp	110/7
3,589,314	6/1971	Tratz et al.	431/208
3,682,114	8/1972	Scheubel	122/7 R
3,996,026	12/1976	Cole	48/197 R
4,335,684	6/1982	Davis	123/23

OTHER PUBLICATIONS

"Behavior of Suspended Coal-Water Slurry Droplets in a Combustion Environment", Shi-Chune Yao et al., Combustion and Flame, 51:335—345 (1983)

"Coal-Fueled Diesel Engines", F. Robben, LBL-16622, presented at S.A.E.F. and L. Meeting Oct. 31-Nov. 4, 1983.

"Will Future Medium Diesels Burn Coal ?", F. Robben, S.A.E., vol. 92, No. 2, Feb. 1984.

"Ignition & Combustion of Coal-Water Slurry in an Experimental Diesel Engine", F. Robben et al., LBL-17721, 6th Inter. Symposium on Coal Slurry Combustion and Technology, Jun., 1984.

Primary Examiner—William A. Cuchlinski, Jr.

Attorney, Agent, or Firm—L. E. Carnahan; Roger S. Gaither; Judson R. Hightower

[57] **ABSTRACT**

A method and device for obtaining, upon injection, flash evaporation of a liquid in a slurry fuel to aid in ignition and combustion. The device is particularly beneficial for use of coal-water slurry fuels in internal combustion engines such as diesel engines and gas turbines, and in external combustion devices such as boilers and furnaces. The slurry fuel is heated under pressure to near critical temperature in an injector accumulator, where the pressure is sufficiently high to prevent boiling. After injection into a combustion chamber, the water temperature will be well above boiling point at a reduced pressure in the combustion chamber, and flash boiling will preferentially take place at solid-liquid surfaces, resulting in the shattering of water droplets and the subsequent separation of the water from coal particles. This prevents the agglomeration of the coal particles during the subsequent ignition and combustion process, and reduces the energy required to evaporate the water and to heat the coal particles to ignition temperature. The overall effect will be to accelerate the ignition and combustion rates, and to reduce the size of the ash particles formed from the coal.

14 Claims, 2 Drawing Figures

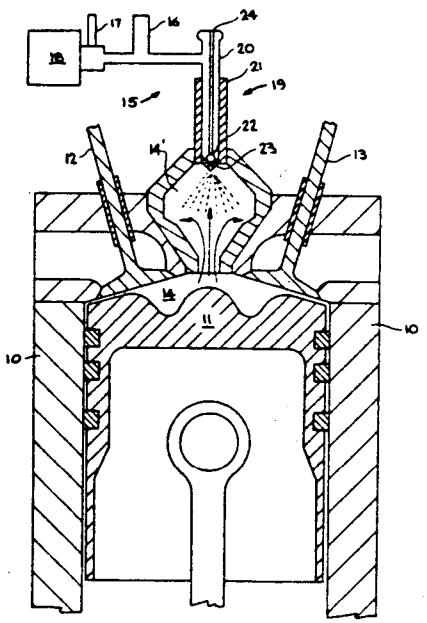

United States Patent [19]

Leung et al.

[11] **Patent Number: 4,559,477**

[45] **Date of Patent: Dec. 17, 1985**

[54] **THREE CHAMBER NEGATIVE ION SOURCE**

[75] Inventors: **Ka-Ngo Leung**, Hercules; **Kenneth W. Ehlers**, Alamo; **John R. Hiskes**, Livermore, all of Calif.

[73] Assignee: **The United States of America as represented by the United States Department of Energy**, Washington, D.C.

[21] Appl. No.: **550,701**

[22] Filed: **Nov. 10, 1983**

[51] **Int. Cl.**[4] **H01J 27/02**

[52] **U.S. Cl.** **315/111.81**; 315/111.91; 315/111.31; 315/111.41; 313/362.1; 313/363.1; 250/424; 250/427

[58] **Field of Search** 315/111.81, 111.91, 315/111.31, 111.41; 250/424, 427; 313/360.1, 361.1, 362.1, 363.1

[56] **References Cited**

U.S. PATENT DOCUMENTS

4,140,943	2/1979	Ehlers	315/111.41
4,377,773	3/1983	Hershcovitch et al.	315/111.81
4,407,705	10/1983	Garscadden et al.	204/157.1 H
4,447,732	5/1984	Leung et al.	315/111.81 X
4,486,665	12/1984	Leung et al.	250/427

OTHER PUBLICATIONS

Ehlers et al., "Multicusp Negative Ion Source", *Rev. Sci. Instrum.*, vol. 51, No. 6, Jun. 1980, pp. 721-727.

Ehlers et al., "Electron Suppression in a Multicusp Negative Ion Source", *Appl. Phys. Lett.*, vol. 38, No. 4, Feb. 1981, pp. 287-289.

Leung et al., "H⁻ Ion Formation from a Surface Conversion Type Ion Source", *J. Appl. Phys.*, vol. 52, No. 6, Jun. 1981, pp. 3905-3911.

Leung et al., "Self Extraction Negative Ion Source", *Rev. Sci. Instrum.*, vol. 53, No. 6, Jun. 1982, pp. 30-36.

Leung et al., "Extraction of Volume-Produced H⁻ Ions from a Multicusp Source", Lawrence Berkeley Lab, University of California preprint, Aug. 1982.

Primary Examiner—David K. Moore
Assistant Examiner—Vincent DeLuca
Attorney, Agent, or Firm—L. E. Carnahan; Roger S. Gaither; Judson R. Hightower

[57] **ABSTRACT**

A negative ion vessel is divided into an excitation chamber, a negative ionization chamber and an extraction chamber by two magnetic filters. Input means introduces neutral molecules into a first chamber where a first electron discharge means vibrationally excites the molecules which migrate to a second chamber. In the second chamber a second electron discharge means ionizes the molecules, producing negative ions which are extracted into or by a third chamber. A first magnetic filter prevents high energy electrons from entering the negative ionization chamber from the excitation chamber. A second magnetic filter prevents high energy electrons from entering the extraction chamber from the negative ionizing chamber. An extraction grid at the end of the negative ion vessel attracts negative ions into the third chamber and accelerates them. Another grid, located adjacent to the extraction grid, carries a small positive voltage in order to inhibit positive ions from migrating into the extraction chamber and contour the plasma potential. Additional electrons can be suppressed from the output flux using ExB forces provided by magnetic field means and the extractor grid electric potential.

20 Claims, 11 Drawing Figures

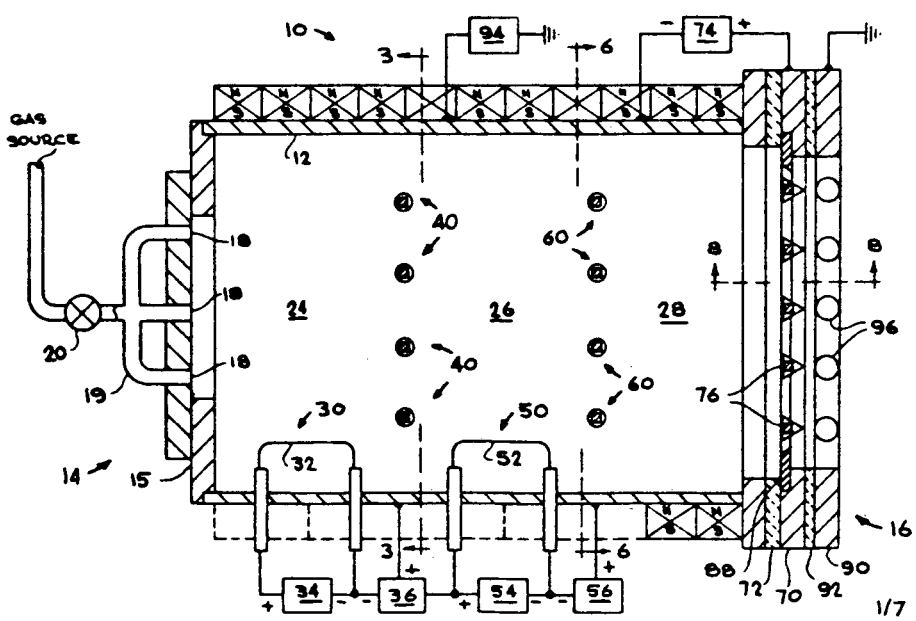

United States Patent [19]

Tsang et al.

[11] **Patent Number: 4,559,818**

[45] **Date of Patent: Dec. 24, 1985**

[54] **THERMAL WELL-TEST METHOD**

[75] Inventors: **Chin-Fu Tsang**, Albany; **Christine A. Doughty**, Berkeley, both of Calif.

[73] Assignee: **The United States of America as represented by the United States Department of Energy**, Washington, D.C.

[21] Appl. No.: **583,451**

[22] Filed: **Feb. 24, 1984**

[51] **Int. Cl.**[4] **E21B 47/06**

[52] **U.S. Cl.** **73/154**

[58] **Field of Search** 73/154, 155; 166/64, 166/250

[56] **References Cited**

U.S. PATENT DOCUMENTS

2,242,612	5/1941	Leonardon .	
2,403,704	7/1946	Blau .	
3,122,016	2/1964	Fordham	73/154
3,180,148	4/1965	Huckabay et al. .	
3,410,136	11/1968	Johns et al.	73/154
3,709,032	1/1973	Coles, Jr. et al.	73/154
3,745,822	7/1973	Pierce et al.	73/154
3,795,142	3/1974	Smith et al.	73/154
3,805,587	4/1974	Sayer .	
3,808,889	5/1974	Rawson et al.	73/154
4,143,549	3/1979	Koehler .	
4,313,342	2/1982	Poppendick	73/154

FOREIGN PATENT DOCUMENTS

306255	7/1971	U.S.S.R.	73/154

OTHER PUBLICATIONS

Bodrarsson, G. S., Mathematical Modeling . . . Systems Under Exploration, Ph.D. Thesis, Univ. of Calif. LBL-13937, Jan. 1982.

Theis, C. V., The Relation Between . . . Ground-Water Storage, Transactions, American Geophysical Union, 1935, pp. 519-524.

Hellstrom, G. et al., Heat Storage . . . Stratification Problems, Univ. of Calif. LBL-14246, Oct. 1979.

Doughty, C. et al., A Dimensionless Parameter . . . Storage System, Water Resources Research, vol. 18, No. 3, Jun. 1982, pp. 571-587.

Tsang, C. F. et al., A Nonisothermal Well Test Analysis Method, Univ. of Calif. LBL-14968, Nov. 1982.

Primary Examiner—Jerry W. Myracle

Attorney, Agent, or Firm—L. E. Carnahan; Roger S. Gaither; Judson R. Hightower

[57] **ABSTRACT**

A well-test method involving injection of hot (or cold) water into a groundwater aquifer, or injecting cold water into a geothermal reservoir. By making temperature measurements at various depths in one or more observation wells, certain properties of the aquifer are determined. These properties, not obtainable from conventional well test procedures, include the permeability anisotropy, and layering in the aquifer, and in-situ thermal properties. The temperature measurements at various depths are obtained from thermistors mounted in the observation wells.

10 Claims, 3 Drawing Figures

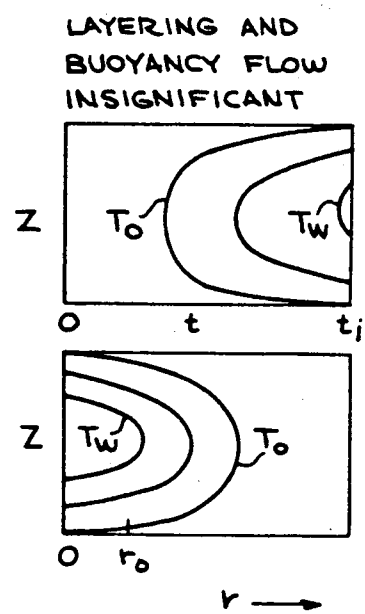

United States Patent [19]

Goldberg et al.

[11] **Patent Number: 4,567,452**

[45] **Date of Patent: Jan. 28, 1986**

[54] **BROAD-BAND BEAM BUNCHER**

[75] Inventors: **David A. Goldberg**, Walnut Creek; **William S. Flood**, Berkeley; **Allan A. Arthur**, Martinez; **Ferdinand Voelker**, Orinda, all of Calif.

[73] Assignee: **The United States of America as represented by the United States Department of Energy**, Washington, D.C.

[21] Appl. No.: **591,651**

[22] Filed: **Mar. 20, 1984**

[51] **Int. Cl.**[4] **H01J 25/10**

[52] **U.S. Cl.** **332/7**; 313/360.1; 315/5.42; 315/5.51; 328/227

[58] **Field of Search** 331/79, 81, 82; 332/7; 313/359.1, 360.1, 363.1, 361.1; 315/3.5, 3.6, 5, 5.39, 5.41, 5.42, 5.51, 39, 39.3; 328/227, 228, 233, 234

[56] **References Cited**

U.S. PATENT DOCUMENTS

2,860,279	11/1958	Hester et al.	315/5.42
3,177,440	4/1965	Marcuse	330/44
3,178,653	4/1965	Smith	331/6
3,289,033	11/1966	Saburi	315/5.51 X
3,904,917	9/1975	Ueda	315/5.39

Primary Examiner—Siegfried H. Grimm
Attorney, Agent, or Firm—Clifton E. Clouse, Jr.; Roger S. Gaither; Judson R. Hightower

[57] **ABSTRACT**

A broad-band beam buncher is disclosed, comprising an evacuated housing, an electron gun therein for producing an electron beam, a buncher cavity having entrance and exit openings through which the beam is directed, grids across such openings, a source providing a positive DC voltage between the cavity and the electron gun, a drift tube through which the electron beam travels in passing through such cavity, grids across the ends of such drift tube, gaps being provided between the drift tube grids and the entrance and exit grids, a modulator for supplying an ultrahigh frequency modulating signal to the drift tube for producing velocity modulation of the electrons in the beam, a drift space in the housing through which the velocity modulated electron beam travels and in which the beam is bunched, and a discharge opening from such drift tube and having a grid across such opening through which the bunched electron beam is discharged into an accelerator or the like. The buncher cavity and the drift tube may be arranged to constitute an extension of a coaxial transmission line which is employed to deliver the modulating signal from a signal source. The extended transmission line may be terminated in its characteristic impedance to afford a broad-band response and the device as a whole designed to effect broad-band beam coupling, so as to minimize variations of the output across the response band.

10 Claims, 5 Drawing Figures

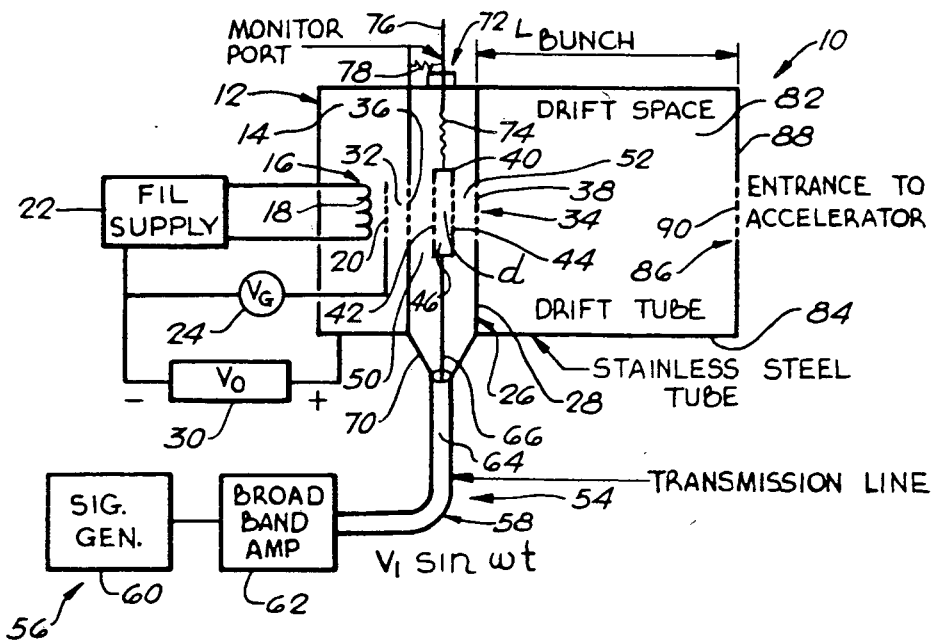

United States Patent [19]

Hood

[11] **Patent Number: 4,569,558**

[45] **Date of Patent: Feb. 11, 1986**

[54] **DRAG BIT CONSTRUCTION**

[75] Inventor: **Michael Hood**, Lafayette, Calif.

[73] Assignee: **The Regents of the University of California**, Berkeley, Calif.

[21] Appl. No.: **516,909**

[22] Filed: **Jul. 25, 1983**

[51] **Int. Cl.**[4] **E21C 25/60**; E21C 7/08; E21F 5/02

[52] **U.S. Cl.** **299/81**; 299/16; 299/17

[58] **Field of Search** 299/86, 81, 12, 1, 16, 299/17

[56] **References Cited**

U.S. PATENT DOCUMENTS

1,388,490	8/1921	Suman .	
2,357,835	9/1944	Leissler .	
3,153,458	10/1964	Short	175/329
3,298,451	1/1967	Eckel et al.	175/393
3,544,166	12/1970	Proctor	299/81
3,865,202	2/1975	Takahashi et al.	175/393
4,251,109	2/1981	Roepke	299/12
4,280,735	7/1981	Lobbe	299/81
4,333,687	6/1982	Barnstorf	299/81
4,334,585	6/1982	Upton	175/329
4,405,178	9/1983	Brandenburg	299/81
4,443,038	4/1984	Brown	299/81
4,456,306	6/1984	Wrulich et al.	299/81
4,488,758	12/1984	Clemmow et al.	299/81

FOREIGN PATENT DOCUMENTS

1126766	6/1982	Canada	299/81
621873	8/1978	U.S.S.R.	299/81
717326	2/1980	U.S.S.R.	299/81

OTHER PUBLICATIONS

Journal of South African Institute of Mining & Metallurgy, vol. 77, No. 4, Nov. 1976, pp. 79-90.

Research Review 1975/76, Chamber of Mines South Africa pp. 66-74.

Hood, M., 1978, A Study of Methods to Improve the Performance of Drag Bits Used to cut Hard Rock", PhD. Thesis. University of Witwatersrand, R.S.A.

Ropchan et al., 4/1980, Application of Water Jet Assisted Drag Bit and Pick Cutters for the Cutting of Coal Measure Rocks" Final Technical Report Submitted to the U.S. DOE Contract No. ET-77G-01-9082.

Tomlin, M. 5/1982, "Field Trials with 10,000 psi Prototype System" Proc. Seminar on Water Jet Assisted Roadheaders for Rock Excavation, sponsored by DOE/NCB Pittsburgh, Pa. pp. C1-C11.

Primary Examiner—Stephen J. Novosad
Assistant Examiner—Michael Goodwin
Attorney, Agent, or Firm—Lothrop & West

[57] **ABSTRACT**

A mounting movable with respect to an adjacent hard face has a projecting drag bit adapted to engage the hard face. The drag bit is disposed for movement relative to the mounting by encounter of the drag bit with the hard face. That relative movement regulates a valve in a water passageway, preferably extending through the drag bit, to play a stream of water in the area of contact of the drag bit and the hard face and to prevent such water play when the drag bit is out of contact with the hard face.

1 Claim, 4 Drawing Figures

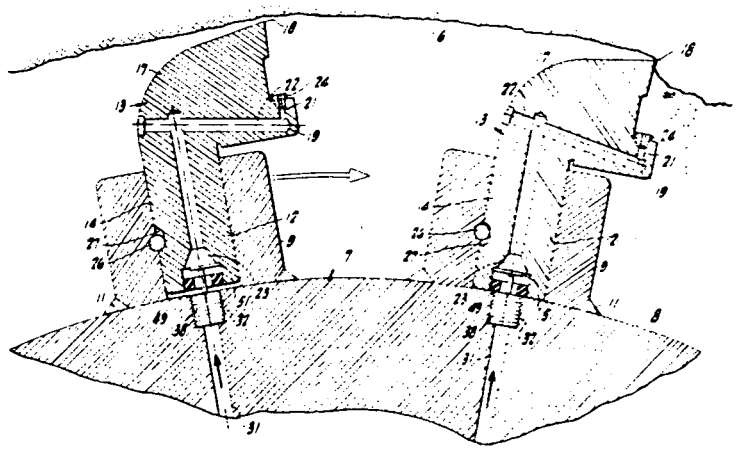

United States Patent [19]

Kerst

[11] **Patent Number: 4,577,156**

[45] **Date of Patent: Mar. 18, 1986**

[54] **PUSH-PULL BETATRON PAIR**

[75] Inventor: **Donald W. Kerst**, Madison, Wis.

[73] Assignee: **The United States of America as represented by the United States Department of Energy**, Washington, D.C.

[21] Appl. No.: **582,420**

[22] Filed: **Feb. 22, 1984**

[51] **Int. Cl.**[4] **H05H 7/08**

[52] **U.S. Cl.** **328/237**

[58] **Field of Search** 328/237; 313/62, 359, 313/154

[56] **References Cited**

U.S. PATENT DOCUMENTS

2,697,167	12/1954	Kerst	328/237
2,698,384	12/1954	Wideröe	328/237
2,797,322	6/1957	Von Arx	328/237
2,819,393	1/1958	Wideröe	328/237

FOREIGN PATENT DOCUMENTS

931946	3/1948	France	313/62

OTHER PUBLICATIONS

"The Betatron", D. W. Kerst; *Handbuch der Physik* B2 XLIV 1956, pp. 193-217.

Chapter 7, "The Betatron-Magnetic Induction Accelerator", M. S. Livingston and J. P. Blewett, *Particle Accelerators* 1962; pp. 193-235.

Primary Examiner—Palmer C. DeMeo

Assistant Examiner—Sandra L. O'Shea

Attorney, Agent, or Firm—Clifton E. Clouse, Jr.; Roger S. Gaither; Judson R. Hightower

[57] **ABSTRACT**

A push-pull betatron accelerator with two coaxial betatron tubes in which two electron beams are alternately accelerated in opposite directions of rotation. Both tubes are linked by the same alternating current accelerating flux produced by one or more accelerating flux coils. The betatron tubes are provided with guide fields having alternating current components which are in the same direction and having direct current biasing components which are in opposite directions. One electron beam is accelerated when the accelerating flux is changing between its negative maximum and its positive maximum, while the other beam is accelerated when the accelerating flux is changing between its positive maximum and its negative maximum. In another embodiment, there is only one betatron tube, in which two electron beams are alternately accelerated in opposite directions of rotation; and in still another embodiment, there are two tubes in which electrons are accelerated alternately, but the AC components for the guide fields are in opposite directions for the two tubes, while the DC biasing components are polarized the same for both tubes.

6 Claims, 9 Drawing Figures

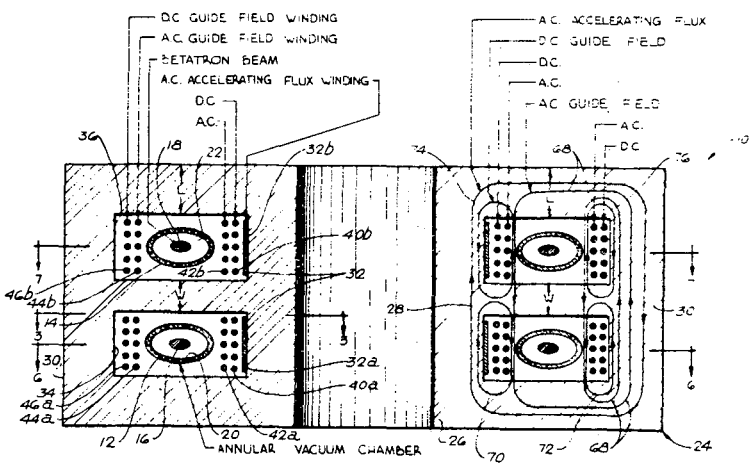

United States Patent [19]

Hilbert et al.

[11] **Patent Number: 4,585,999**

[45] **Date of Patent: Apr. 29, 1986**

[54] **RADIOFREQUENCY AMPLIFIER BASED ON A DC SUPERCONDUCTING QUANTUM INTERFERENCE DEVICE**

[75] Inventors: **Claude Hilbert; John M. Martinis; John Clarke,** all of Berkeley, Calif.

[73] Assignee: **The United States of America as represented by the United States Department of Energy,** Washington, D.C.

[21] Appl. No.: **604,547**

[22] Filed: **Apr. 27, 1984**

[51] **Int. Cl.**[4] **H03F 19/00**

[52] **U.S. Cl.** ..... **330/61 R;** 307/306; 324/248; 330/68; 330/250; 357/5

[58] **Field of Search** ..... 330/60, 61 R, 61 A, 330/62, 63, 68, 250; 307/306; 357/5; 324/248, 318, 322

[56] **References Cited**

U.S. PATENT DOCUMENTS

3,533,018	10/1970	Jaklevic et al.	332/52
3,758,854	9/1973	Zimmerman	307/306 X
3,978,351	8/1976	Zappe	307/306
4,025,844	5/1977	Deutscher	307/306 X
4,177,476	12/1979	Kroger et al.	357/5
4,320,341	3/1982	Lutes	324/248
4,324,255	4/1982	Barach et al.	324/248 X
4,334,158	6/1982	Faris	307/462
4,389,612	6/1983	Simmonds et al.	324/248
4,403,189	9/1983	Simmonds	324/248
4,509,018	4/1985	Gershensun	307/306 X

OTHER PUBLICATIONS

Clarke, "Josephson Effect Devices", *Phys. Bull.* Great Britain, vol. 30, 1979, pp. 206–208.

Falco, "SQUIDS: Applications Outside the Laboratory," *Phys. Technol.*, vol. 9, pp. 148–153, 1978.

Clarke et al., "Optimization of dc SQUID Voltmeter and Magnetometer Circuits," *Journal of Low Temperature Physics,* vol. 37, Nos. 3/4, 1979, pp. 405–420.

Ketchen et al., "Ultra-Low-Noise Tunnel Junction dc SQUID with a Tightly Coupled Planar Input Coil," Applied Physics Letters 40(8), Apr. 15, 1982, pp. 736–738.

Martinis et al., "Measurements of Current Noise in dc SQUIDS," LBL-15313, Lawrence Berkeley Laboratory, University of California, May 1983.

Hilbert et al., "Radiofrequency Amplifier Based on a dc Superconducting Quantum Interference Device". *Appl. Phys. Lett.* 43(7), Oct. 1, 1983, pp. 694–696.

Primary Examiner—James B. Mullins

Attorney, Agent, or Firm—Clifton E. Clouse, Jr.; Roger S. Gaither; Judson R. Hightower

[57] **ABSTRACT**

A low noise radiofrequency amplifier (**10**), using a dc SQUID (superconducting quantum interference device) as the input amplifying element. The dc SQUID (**11**) and an input coil (**12**) are maintained at superconductivity temperatures in a superconducting shield (**13**), with the input coil (**12**) inductively coupled to the superconducting ring (**17**) of the dc SQUID (**11**). A radiofrequency signal from outside the shield (**13**) is applied to the input coil (**12**), and an amplified radiofrequency signal is developed across the dc SQUID ring (**17**) and transmitted to exteriorly of the shield (**13**). A power gain of 19.5±0.5 dB has been achieved with a noise temperature of 1.0±0.4 K. at a frequency of 100 MHz.

9 Claims, 7 Drawing Figures

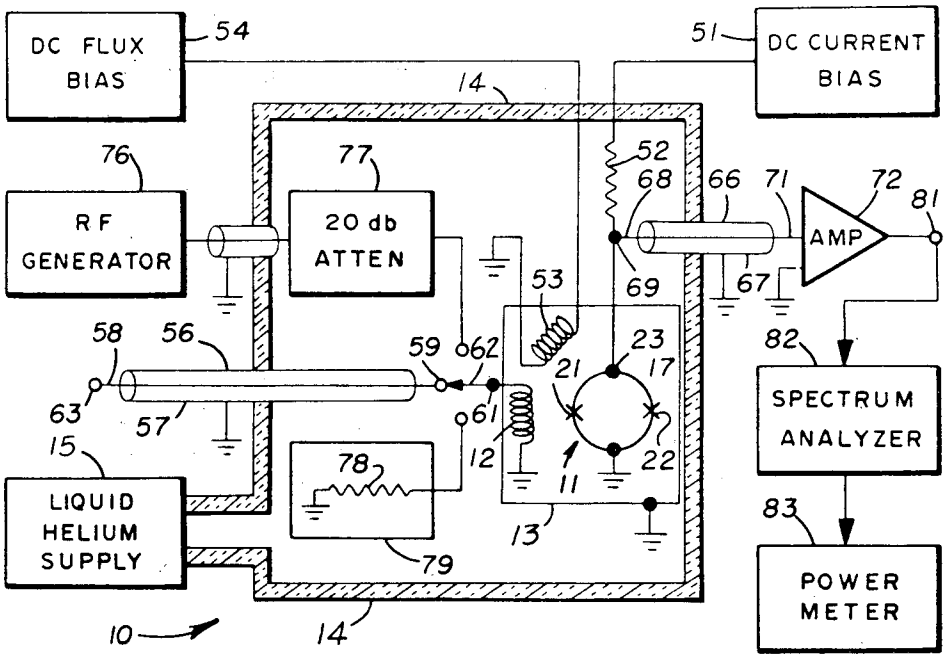

United States Patent [19]

Berdahl

[11] **Patent Number: 4,586,350**

[45] **Date of Patent: May 6, 1986**

[54] **SELECTIVE RADIATIVE COOLING WITH MGO AND/OR LIF LAYERS**

[75] Inventor: **Paul H. Berdahl**, Oakland, Calif.

[73] Assignee: **The United States of America as represented by the United States Department of Energy**, Washington, D.C.

[21] Appl. No.: **650,593**

[22] Filed: **Sep. 14, 1984**

[51] **Int. Cl.**[4] **F25B 21/02**

[52] **U.S. Cl.** **62/467**; 62/264; 350/1.7

[58] **Field of Search** 62/264, 467; 126/417; 350/1.7

[56] **References Cited**

U.S. PATENT DOCUMENTS

3,043,112	7/1962	Head	62/467
3,310,102	3/1967	Trombe	62/467
3,671,286	6/1972	Fischell	117/333
4,147,040	4/1979	Altman	62/467
4,150,552	4/1979	Altman	62/467
4,155,226	5/1979	Altman	62/467
4,199,218	4/1980	Steinhage et al.	350/1.7
4,323,619	4/1982	Silvestrini et al.	428/212
4,337,990	7/1982	Fan et al.	350/1.7

OTHER PUBLICATIONS

Granqvist et al: "Radiative Cooling to Low Temperatures: General Considerations and Application to Selectively Emitting SiO Films", J. Appl. Physics, 52(6) pp. 4205-4220, Jun. 1981.

Eriksson et al: "Infared Optical Properties of Electron-Beam Evaporated Silicon Oxynitride Films", Applied Optics, vol. 22, No. 20, Oct. 15, 1983.

Turner et al: "Enhanced Reflectance of Reststrahlen Reflection Filters", *Applied Optics*, 8/1965, vol. 4, No. 8, pp. 927-928.

Catalanotti et al: "Radiative Cooling of Selective Surfaces", *Solar Energy*, 1975, vol. 17, pp. 83-89.

Michelle: "Selective Radiation Cooling Another Look", CSIRO Div. of Tribophysics, Univ. of Melbourne, Parkville, Victoria, Australia, Sep. 1976.

Primary Examiner—Ronald C. Capossela

Attorney, Agent, or Firm—L. E. Carnahan; Roger S. Gaither; Judson R. Hightower

[57] **ABSTRACT**

A material for a wavelength-selective radiative cooling system, the material comprising an infrared-reflective substrate coated with magnesium oxide and/or lithium fluoride in a polycrystalline form. The material is non-absorptive for short wavelengths, absorptive from 8 to 13 microns, and reflective at longer wavelengths. The infrared-reflective substrate inhibits absorption at wavelengths shorter than 8 microns, and the magnesium oxide and/or lithium fluoride layers reflect radiation at wavelengths longer than 13 microns.

21 Claims, 2 Drawing Figures

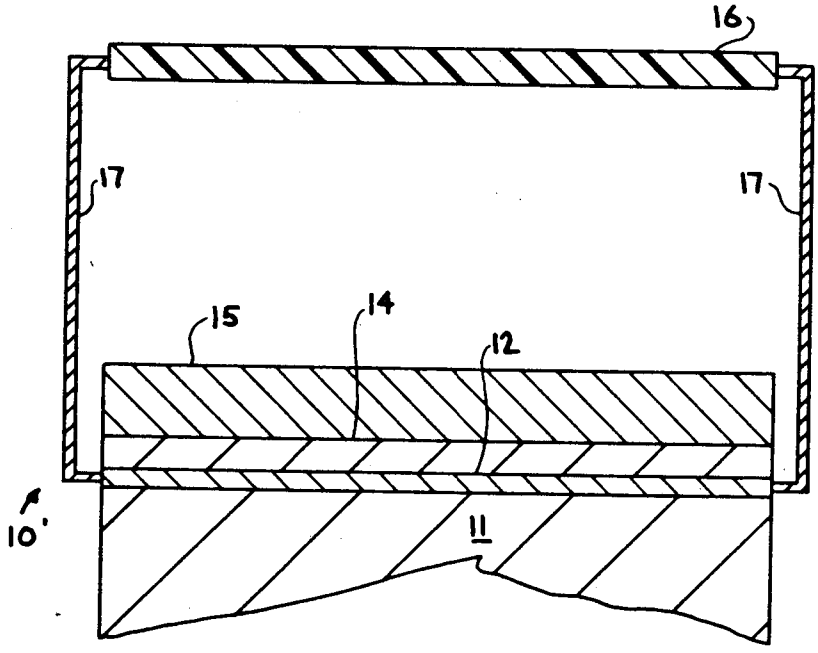

United States Patent [19]

Anderson

[11] **Patent Number: 4,588,955**

[45] **Date of Patent: May 13, 1986**

[54] **TRANSVERSE FIELD FOCUSED SYSTEM**

[75] Inventor: **Oscar A. Anderson, Berkeley, Calif.**

[73] Assignee: **The United States of America as represented by the United States Department of Energy,** Washington, D.C.

[21] Appl. No.: **500,105**

[22] Filed: **Jun. 1, 1983**

[51] **Int. Cl.**[4] **H01J 23/00**

[52] **U.S. Cl.** ..... **328/233**; 250/423 R; 376/130

[58] **Field of Search** ..... 250/251, 396 R, 398, 250/423 R; 313/231.01, 361.1; 376/101, 116, 117, 127, 129, 130, 287; 315/111.81; 328/233

[56] **References Cited**

U.S. PATENT DOCUMENTS

2,932,745	4/1960	Alberti et al.	376/287
2,942,115	6/1960	O'Connell	376/287
3,094,474	6/1963	Gale	250/396 R
3,120,470	2/1964	Imhoff et al. .	
3,218,562	11/1965	Serduke .	
3,235,463	2/1966	Sankovich	376/287
3,379,911	4/1968	Enge	250/398
3,660,658	5/1972	Leboutet et al.	250/398
3,734,827	5/1973	Schilling	376/287
4,134,017	1/1979	Azam et al.	250/398
4,347,621	8/1982	Dow .	
4,434,131	2/1984	Dagenhart et al.	376/130
4,439,395	3/1984	Kim	376/130
4,480,185	10/1984	Hashimoto	376/130

OTHER PUBLICATIONS

Nagy et al., "Introduction to the Theory of Space-Charge Optics," pp. 384–389.

Hogg, "Periodic Electrostatic Beam Focusing," IEE, Feb. 1959, pp. 1016–1020.

Kirsten et al., "Space Charge Flow," 1967, pp. 254–271.

Anderson et al., "Negative-Ion-Based Neutral Beam System for Fed-A Current Drive," LBL-14880, Aug. 1980.

Anderson et al., "A Transverse-Field-Focusing (TFF) Accelerator for Intense Ribbon Beam," LBL-15172, Mar. 1983.

Abramyan, "Transformer Type Accelerators for Intense Electron Beams," pp. 447–455 (1971).

Primary Examiner—Deborah L. Kyle

Assistant Examiner—Richard W. Wendtland

Attorney, Agent, or Firm—Clifton E. Clouse, Jr.; Roger S. Gaither; Judson R. Hightower

[57] **ABSTRACT**

A transverse field focused (TFF) system for transport or acceleration of an intense sheet beam of negative ions in which a serial arrangement of a plurality of pairs of concentric cylindrical-arc electrodes is provided. Acceleration of the sheet beam can be achieved by progressively increasing the mean electrode voltage of successive electrode pairs. Because the beam is curved by the electrodes, the system can be designed to transport the beam through a maze passage which is baffled to prevent line of sight therethrough. Edge containment of the beam can be achieved by shaping the side edges of the electrodes to produce an electric force vector directed inwardly from the electrode edges.

5 Claims, 6 Drawing Figures

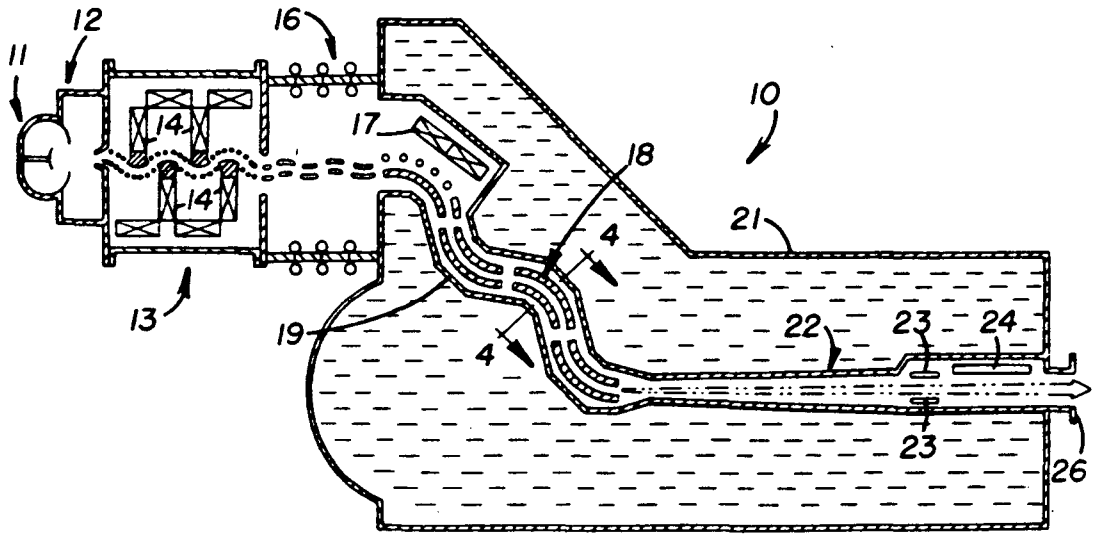

United States Patent [19]

Hansen et al.

[11] **Patent Number: 4,589,006**

[45] **Date of Patent: May 13, 1986**

[54] **GERMANIUM DETECTOR PASSIVATED WITH HYDROGENATED AMORPHOUS GERMANIUM**

[75] Inventors: **William L. Hansen**, Walnut Creek; **Eugene E. Haller**, Berkeley, both of Calif.

[73] Assignee: **The United States of America as represented by the United States Department of Energy**, Washington, D.C.

[21] Appl. No.: **667,384**

[22] Filed: **Nov. 1, 1984**

Related U.S. Application Data

[60] Continuation of Ser. No. 410,786, Aug. 23, 1982, abandoned, which is a division of Ser. No. 188,436, Sep. 19, 1980, abandoned.

[51] **Int. Cl.**[4] **H01L 21/314**; H01L 31/10; G01T 1/24

[52] **U.S. Cl.** ..... **357/29**; 148/DIG. 1; 148/DIG. 58; 148/DIG. 81; 148/DIG. 158; 357/2; 357/52; 357/58; 204/192 S; 204/192 D; 427/92

[58] **Field of Search** ..... 357/2, 29, 54, 52; 427/92; 204/192 S, 192 D

[56] **References Cited**

U.S. PATENT DOCUMENTS

2,862,126	11/1958	Ploke et al.	358/13
3,470,426	10/1969	Feldman	357/2
3,872,492	3/1975	Robbins	357/23.7
4,151,058	4/1979	Kaplan	204/192
4,162,505	7/1979	Hanak	526/187
4,224,084	9/1980	Pankove	357/2
4,254,426	3/1981	Pankove	357/2
4,315,782	2/1982	Tarng	357/52
4,331,486	5/1982	Chenevas-Paule et al.	148/1.5
4,362,722	12/1982	Dannhaeuser et al.	357/52

FOREIGN PATENT DOCUMENTS

2546451	4/1976	Fed. Rep. of Germany	357/29

OTHER PUBLICATIONS

Brodsky et al., IBM Tech. Disclosure Bulletin, vol. 19, No. 12, May 1977, pp. 4802–4803.

Moustakas, J. Electronic Materials, vol. 18, No. 3, 1979, pp. 391–435.

Primary Examiner—William D. Larkins

Attorney, Agent, or Firm—Clifton E. Clouse, Jr.; Roger S. Gaither; Judson R. Hightower

[57] **ABSTRACT**

Passivation of predominantly crystalline semiconductor devices (**12**) is provided for by a surface coating (**21**) of sputtered hydrogenated amorphous semiconductor material. Passivation of a radiation detector germanium diode, for example, is realized by sputtering a coating (**21**) of amorphous germanium onto the etched and quenched diode surface (**11**) in a low pressure atmosphere of hydrogen and argon. Unlike prior germanium diode semiconductor devices (**12**), which must be maintained in vacuum at cryogenic temperatures to avoid deterioration, a diode processed in the described manner may be stored in air at room temperature or otherwise exposed to a variety of environmental conditions. The coating (**21**) compensates for pre-existing undesirable surface states as well as protecting the semiconductor device (**12**) against future impregnation with impurities.

2 Claims, 10 Drawing Figures

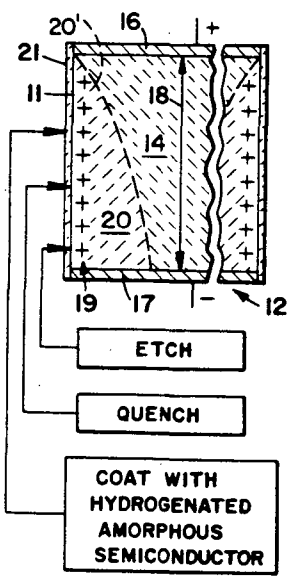

United States Patent [19]

Amer

[11] **Patent Number: 4,591,718**

[45] **Date of Patent: May 27, 1986**

[54] **PHOTOTHERMAL METHOD FOR IN SITU MICROANALYSIS OF THE CHEMICAL COMPOSITION OF COAL SAMPLES**

[75] Inventor: **Nabil M. Amer**, Berkeley, Calif.

[73] Assignee: **The United States of America as represented by the United States Department of Energy**, Washington, D.C.

[21] Appl. No.: **545,338**

[22] Filed: **Oct. 25, 1983**

[51] **Int. Cl.**[4] **G01J 5/08**; G01N 21/63

[52] **U.S. Cl.** **250/339**; 356/432; 374/45

[58] **Field of Search** 374/32, 17, 45, 130, 374/5; 356/128, 432; 250/318, 343, 339

[56] **References Cited**

U.S. PATENT DOCUMENTS

4,030,837	6/1977	Kojima et al.	356/30 X
4,048,499	9/1977	Kreuzer	250/344
4,061,918	12/1977	Preier et al.	250/343
4,310,762	8/1984	Harris et al.	250/343
4,468,136	8/1984	Murphy et al.	374/45
4,540,285	9/1985	Amer	356/42

OTHER PUBLICATIONS

Photothermal Deflection Spectroscopy and Detection, W. B. Jackson et al., Applied Optics, 4/15/81, vol. 20, No. 8, pp. 1333–1344.

"A Sensitive Photothermal Deflection Technique for Measuring Absorption in Optically Thin Media", by A. C. Boccara et al.; Apr. 1980, Lawrence Berkeley Lab., (LBL-10793 Reprint), (Calif.), pp. 1-11.

"Sensitive In Situ Trace Gas Detection by Photothermal Deflection Spectroscopy", by D. Fournier et al., Mar. 1980, Lawrence Berkeley Lab., (LBL-10695 Reprint), (Calif.), 374–5.

Primary Examiner—Daniel M. Yasich

Attorney, Agent, or Firm—L. E. Carnahan; Roger S. Gaither; Judson R. Hightower

[57] **ABSTRACT**

Successive minute regions (**13**) along a scan path on a coal sample (**11**) are individually analyzed, at a series of different depths if desired, to determine chemical composition including the locations, sizes and distributions of different maceral inclusions (**12**). A sequence of infrared light pulses (**17**) of progressively changing wavelengths is directed into each minute region (**13**) and a probe light beam (**22**) is directed along the sample surface (**21**) adjacent the region (**13**). Infrared wavelengths at which strong absorption occurs in the region (**13**) are identified by detecting the resulting deflections (ϕ) of the probe beam (**22**) caused by thermally induced index of refraction changes in the air or other medium (**19**) adjacent the region (**13**). The detected peak absorption wavelengths are correlated with known characteristic peak absorption wavelengths of specific coal constituents to identify the composition of each such minute region (**13**) of the sample (**11**). The method enables rapid, convenient and non-destructive analyses of coal specimens to facilitate mining, processing and utilization of coals.

10 Claims, 2 Drawing Figures

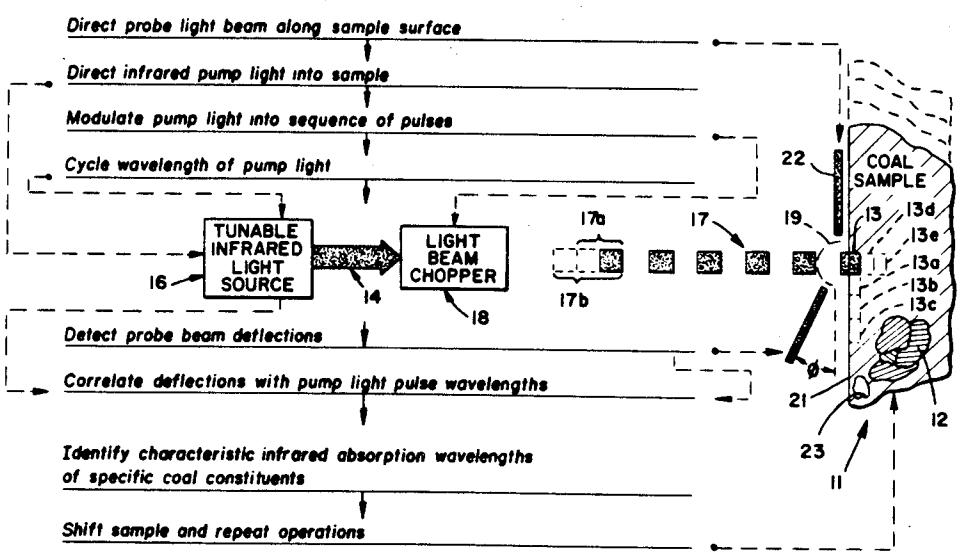

United States Patent [19]

Ergun et al.

[11] **Patent Number: 4,597,832**

[45] **Date of Patent: Jul. 1, 1986**

[54] **APPARATUS FOR CONVERTING BIOMASS TO A PUMPABLE SLURRY**

[75] Inventors: **Sabri Ergun**, Hillsborough; **Larry L. Schaleger**, Oakland; **James A. Wrathall**, Berkeley; **Nasser Yaghoubzadeh**, El Cerrito, all of Calif.

[73] Assignee: **The United States of America as represented by the United States Department of Energy**, Washington, D.C.

[21] Appl. No.: **307,560**

[22] Filed: **Oct. 1, 1981**

[51] **Int. Cl.**[4] **D21C 7/00**

[52] **U.S. Cl.** **162/234**; 162/243; 162/261; 162/237; 127/1

[58] **Field of Search** ..... 44/2, 1 E; 241/28; 48/DIG. 7; 162/261, 234, 243, 246, 4, 28, 14, 237; 127/37, 1

[56] **References Cited**

U.S. PATENT DOCUMENTS

1,793,095	2/1931	Knoll	162/261 X
3,092,338	6/1963	Reinhall	241/28 X
3,212,933	10/1965	Hess et al.	127/37
3,298,899	1/1967	Laakso	162/19
3,586,600	6/1971	Rich et al.	162/243 X
3,881,985	5/1975	Simmons et al.	162/243 X
4,002,528	1/1977	Laakso	162/28 X
4,025,356	5/1977	Nyman et al.	127/1
4,072,274	2/1978	Syrjanen	162/28 X
4,187,141	2/1980	Ahrel	162/28 X
4,339,206	7/1982	Ahs	162/243 X

FOREIGN PATENT DOCUMENTS

2740765	3/1979	Fed. Rep. of Germany	366/336
53-08801	4/1978	Japan	162/28
54-128863	10/1979	Japan	366/336

OTHER PUBLICATIONS

C & E News; vol. 20; 10/8/79; "Continuous Cellulose to Glucose Process".

Primary Examiner—Kenneth Schor

Attorney, Agent, or Firm—L. E. Carnahan; Roger S. Gaither; Judson R. Hightower

[57] **ABSTRACT**

An apparatus used in the pretreatment of wood chips in a process for converting biomass to a liquid hydrocarbonaceous fuel. The apparatus functions to break down the wood chips to a size distribution that can be readily handled in a slurry form. Low maintenance operation is obtained by hydrolyzing the chips in a pressure vessel having no moving parts.

12 Claims, 1 Drawing Figure

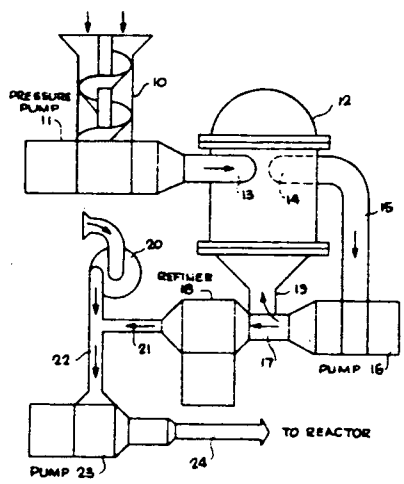

United States Patent [19]

Benner

[11] **Patent Number: 4,601,882**

[45] **Date of Patent: Jul. 22, 1986**

[54] **OXYGEN ANALYZER**

[75] Inventor: **William H. Benner**, Danville, Calif.

[73] Assignee: **The United States of America as represented by the United States Department of Energy**, Washington, D.C.

[21] Appl. No.: **608,282**

[22] Filed: **May 8, 1984**

[51] **Int. Cl.**[4] **G01N 31/12**

[52] **U.S. Cl.** **422/80**; 422/78; 436/127; 436/155; 436/157

[58] **Field of Search** 422/78, 80; 436/127, 436/136, 138, 155, 157

[56] **References Cited**

U.S. PATENT DOCUMENTS

1,515,237	11/1924	Yensen	436/158 X
2,731,330	1/1956	Codell et al.	422/78 X
2,774,588	12/1956	Oita	422/78
3,252,759	5/1966	Simon	422/78 X
3,298,786	1/1967	Hinsvark	422/78 X
3,374,064	3/1968	Kolsto	422/78
3,647,385	3/1972	Stephens	436/155
3,703,355	11/1972	Takahashi et al.	422/78 X
3,847,546	11/1974	Paul	422/78 X
3,861,874	1/1975	Kre	422/80 X
3,945,799	3/1976	Honma	422/78 X
4,229,412	10/1980	Orths et al.	422/78 X
4,244,917	1/1981	Woods et al.	422/78
4,332,770	6/1982	Ishida et al.	422/78

OTHER PUBLICATIONS

Benner et al., "Determination of Organic Oxygen in Ambient Particulate Matter", LBL-16103, University of California, Aug. 1983.

Uhdeova et al., Analytical Chemistry, vol. 53, pp. 164-167, 1981.

Campanile et al., Analytical Chemistry, vol. 23, No. 10, pp. 1421-1426, Oct. 1951.

Oita et al., Analytical Chemistry, vol. 26, No. 3, pp. 600-602, Mar. 1954.

Primary Examiner—Arnold Turk
Assistant Examiner—Robert J. Hill, Jr
Attorney, Agent, or Firm—L. E. Carnahan; Roger S. Gaither; Judson R. Hightower

[57] **ABSTRACT**

An oxygen analyzer which identifies and classifies microgram quantities of oxygen in ambient particulate matter and for quantitating organic oxygen in solvent extracts of ambient particulate matter. A sample is pyrolyzed in oxygen-free nitrogen gas (N_2), and the resulting oxygen quantitatively converted to carbon monoxide (CO) by contact with hot granular carbon (C). Two analysis modes are made possible: (1) rapid determination of total pyrolyzable oxygen obtained by decomposing the sample at 1135° C., or (2) temperature-programmed oxygen thermal analysis obtained by heating the sample from room temperature to 1135° C. as a function of time. The analyzer basically comprises a pyrolysis tube containing a bed of granular carbon under N_2, ovens used to heat the carbon and/or decompose the sample, and a non-dispersive infrared CO detector coupled to a mini-computer to quantitate oxygen in the decomposition products and control oven heating.

13 Claims, 2 Drawing Figures

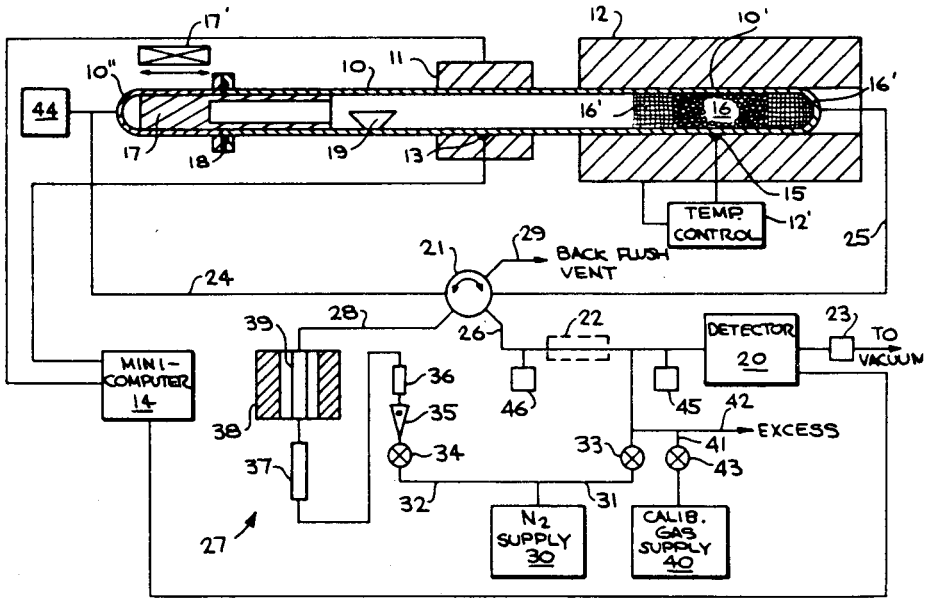

United States Patent [19]

Fish

[11] **Patent Number: 4,604,191**

[45] **Date of Patent: * Aug. 5, 1986**

[54] **REMOVAL OF ARSENIC, VANADIUM, AND/OR NICKEL COMPOUNDS FROM PETROLIFEROUS LIQUIDS**

[75] Inventor: **Richard H. Fish**, Berkeley, Calif.

[73] Assignee: **The United States of America as represented by the United States Department of Energy**, Washington, D.C.

[*] Notice: The portion of the term of this patent subsequent to May 21, 2002 has been disclaimed.

[21] Appl. No.: **735,228**

[22] Filed: **May 17, 1985**

Related U.S. Application Data

[60] Continuation-in-part of Ser. No. 597,627, Apr. 6, 1984, Pat. No. 4,518,490, Division of Ser. No. 699,886, Feb. 8, 1985, Pat. No. 4,552,854.

[51] **Int. Cl.**[4] **C10G 25/00**

[52] **U.S. Cl.** ..... **208/251 R**; 585/830; 585/865

[58] **Field of Search** ..... 208/251 R; 585/820, 585/830, 864, 865

[56] **References Cited**

U.S. PATENT DOCUMENTS

3,799,870	3/1974	Heilweil	208/251 R
3,838,043	9/1974	Crook et al.	208/251 R
3,856,664	12/1974	Whitehurst	208/251 R
3,919,077	11/1975	Whitehurst	208/251 R
3,944,501	3/1976	Whitehurst et al.	208/251 R
4,136,021	1/1979	Whitehurst	208/251 R
4,518,490	5/1985	Fish	208/11 R
4,541,918	9/1985	Stapp	208/251 R
4,552,854	11/1985	Fish	208/251 R

Primary Examiner—Andrew H. Metz
Assistant Examiner—Anthony McFarlane
Attorney, Agent, or Firm—Harold M. Dixon; Roger S. Gaither; Judson R. Hightower

[57] **ABSTRACT**

Described is a process for removing arsenic, vanadium, and/or nickel from petroliferous derived liquids by contacting said liquid at an elevated temperature with a divinylbenzene-crosslinked polystyrene having catechol ligands anchored thereon. For vanadium and nickel removal an amine, preferably a diamine is included.

Also, described is a process for regenerating spent catecholated polystyrene by removal of the arsenic, vanadium, and/or nickel bound to it from contacting petroliferous liquid as described above and involves:

treating the spent polymer containing any vanadium and/or nickel with an aqueous acid to achieve an acid pH; and,

separating the solids from the liquid; and then

treating said spent catecholated polystyrene, at a temperature in the range of about 20° to 100° C. with an aqueous solution of at least one carbonate and/or bicarbonate of ammonium, alkali and alkaline earth metals, said solution having a pH between about 8 and 10; and,

separating the solids and liquids from each other. Preferably the regeneration treatment of arsenic containing catecholated polymer is in two steps wherein the first step is carried out with an aqueous alcoholic carbonate solution containing lower alkyl alcohol, and, the steps are repeated using a bicarbonate.

11 Claims, No Drawings

United States Patent [19]

Hitchcock et al.

[11] **Patent Number: 4,609,596**

[45] **Date of Patent: Sep. 2, 1986**

[54] **ELECTROCHEMICAL DEVICES UTILIZING MOLTEN ALKALI METAL ELECTRODE-REACTANT**

[75] Inventors: **David C. Hitchcock**, Omaha, Nebr.; **Catherine C. Mailhe**, Berkeley; **Lutgard C. De Jonghe**, Oakland, both of Calif.

[73] Assignee: **The United States of America as represented by the United States Department of Energy**, Washington, D.C.

[21] Appl. No.: **753,496**

[22] Filed: **Jul. 10, 1985**

[51] **Int. Cl.**[4] **H01M 4/36**

[52] **U.S. Cl.** **429/104**; 429/191

[58] **Field of Search** 429/105, 191, 104, 193, 429/11

[56] **References Cited**

U.S. PATENT DOCUMENTS

4,356,241	10/1982	Wright et al.	429/104
4,407,912	10/1983	Virkar et al.	429/104
4,430,393	2/1984	Bennett et al.	429/105 X

Primary Examiner—Charles F. Lefevour

Attorney, Agent, or Firm—Harold M. Dixon; Roger S. Gaither; Judson R. Hightower

[57] **ABSTRACT**

Electrochemical cells are provided with a reactive metal to reduce the oxide of the alkali metal electrode-reactant. Cells employing a molten alkali metal electrode, e.g., sodium, in contact with a ceramic electrolyte, which is a conductor of the ions of the alkali metal forming the electrode, exhibit a lower resistance when a reactive metal, e.g., vanadium, is allowed to react with and reduce the alkali metal oxide. Such cells exhibit less degradation of the electrolyte and of the glass seals often used to joining the electrolyte to the other components of the cell under cycling conditions.

7 Claims, 5 Drawing Figures

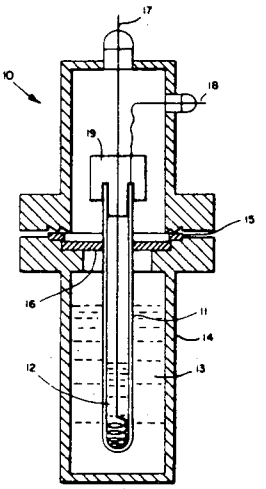

United States Patent [19]

Gavin

[11] **Patent Number: 4,626,691**

[45] **Date of Patent: Dec. 2, 1986**

[54] **LIQUID-FILM ELECTRON STRIPPER**

[75] Inventor: **Basil F. Gavin**, Albion, Calif.

[73] Assignee: **The United States of America as represented by the United States Department of Energy**, Washington, D.C.

[21] Appl. No.: **667,255**

[22] Filed: **Nov. 1, 1984**

[51] **Int. Cl.**[4] **H01J 3/04**

[52] **U.S. Cl.** ..... **250/423 R**; 239/763/224

[58] **Field of Search** ..... 250/423 R, 424, 492.21; 239/701, 703, 224, 222.11

[56] **References Cited**

U.S. PATENT DOCUMENTS

2,166,772	7/1939	Salsas-Serra	239/224
3,867,704	2/1975	Gorka	328/233
4,453,077	6/1984	Leeman et al.	250/423 R

FOREIGN PATENT DOCUMENTS

0869826	10/1981	U.S.S.R.	239/224

OTHER PUBLICATIONS

LBL-17996-Rev. Draft, Gavin, B. et al, "A Continuous Liquid Sheet Generator for Ion Stripping," Sep. 1984.

Perry, J. H., "Chemical Engineers Handbook," McGraw Hill (1963), pp. 18-66.

Alonso, J. R. et al., "Fluorocarbon Stripping of Low Beta Heavy Ions," IEEE Trans. on Nuc. Sci., vol. NS-26, No. 3, Jun. 79, 3718-20.

Thomas, G. E., "Carbon Stripper Foils For Heavy Ion Accelerators," IEEE Trans. on Nuc. Sci., vol. NS-28, No. 2, Apr. 81, 1584-87.

Leeman, B. T. et al., "A Liquid Film Stripper for High Intensity Ion Beams," IEEE Trans. on Nuc. Sci., vol. NS-28, No. 3, Jun. 81.

Primary Examiner—Bruce C. Anderson

Assistant Examiner—Paul A. Guss

Attorney, Agent, or Firm—L. E. Carnahan; Roger S. Gaither; Judson R. Hightower

[57] **ABSTRACT**

An improved liquid-film electron stripper particularly for high intensity heavy ion beams which produces constant regenerated, stable, free-standing liquid films having an adjustable thickness between 0.3 to 0.05 microns. The improved electron stripper is basically composed of at least one high speed, rotating disc with a very sharp, precision-like, ground edge on one said of the disc's periphery and with a highly polished, flat, radial surface adjacent the sharp edge. A fine stream of liquid, such as oil, impinges at a 90° angle adjacent the disc's sharp outer edge. Film terminators, located at a selected distance from the disc perimeter are positioned approximately perpendicular to the film. The terminators support, shape, and stretch the film and are arranged to assist in the prevention of liquid droplet formation by directing the collected film to a reservoir below without breaking or interfering with the film. One embodiment utilizes two rotating discs and associated terminators, with the discs rotating so as to form films in opposite directions, and with the second disc being located down beam-line relative to the first disc.

15 Claims, 4 Drawing Figures

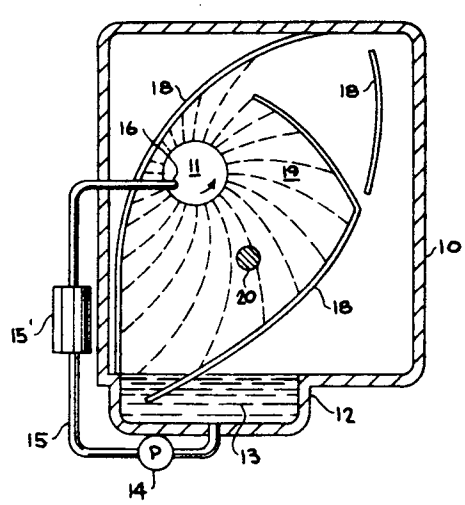

This report was done with support from the Department of Energy. Any conclusions or opinions expressed in this report represent solely those of the author(s) and not necessarily those of The Regents of the University of California, the Lawrence Berkeley Laboratory or the Department of Energy.

Reference to a company or product name does not imply approval or recommendation of the product by the University of California or the U.S. Department of Energy to the exclusion of others that may be suitable.

LAWRENCE BERKELEY LABORATORY
TECHNICAL INFORMATION DEPARTMENT
UNIVERSITY OF CALIFORNIA
BERKELEY, CALIFORNIA 94720