DISCLAIMER

This document was prepared as an account of work sponsored by the United States Government. While this document is believed to contain correct information, neither the United States Government nor any agency thereof, nor the Regents of the University of California, nor any of their employees, makes any warranty, express or implied, or assumes any legal responsibility for the accuracy, completeness, or usefulness of any information, apparatus, product, or process disclosed, or represents that its use would not infringe privately owned rights. Reference herein to any specific commercial product, process, or service by its trade name, trademark, manufacturer, or otherwise, does not necessarily constitute or imply its endorsement, recommendation, or favoring by the United States Government or any agency thereof, or the Regents of the University of California. The views and opinions of authors expressed herein do not necessarily state or reflect those of the United States Government or any agency thereof or the Regents of the University of California.

LAWRENCE RADIATION LABORATORY · UNIVERSITY OF CALIFORNIA

ENGINEERING NOTE

FILE NO. EE-962

PAGE 1 of 21

SUBJECT

STABILIZED LIGHT SOURCE DRAWINGS AND INSTRUCTIONS

NAME Robert F. Tusting

DATE December 6, 1963

Helen Simmons
5162

UCID 2059
90-1132 ext. 5718
EE-5443-

This note contains the drawings and instructions for constructing and testing the light source described in UCRL-10895, "Constant-Amplitude Light-Flash Generator for Gain Stabilization of Photosensitive Systems". Included is a schematic of a power supply suitable for driving a single light source.

Drawing Number	Description
10X1010-S-1	Stabilized Light Source - Schematic
10X1010-M-1	Stabilized Light Source - Ground Ring
10X1010-M-2	Stabilized Light Source - Lamp Retaining Ring
10X1010-M-3	Stabilized Light Source - Barrel
10X1010-M-4	Stabilized Light Source - Component Board
10X1010-M-5	Stabilized Light Source - 1/8" Rubber Washer
10X1010-M-6	Stabilized Light Source - .010 Rubber Washer
4X35811-BA	Light Shield (only)
10X1010-A-1	Stabilized Light Source - Lamp Support Assembly
10X1010-L-1	Stabilized Light Source - Board Layout
10X1010-D-1	Stabilized Light Source - Inst. for Winding 4:1 Step-up Transformer
10X1010-D-2	Stabilized Light Source - AR-4 Lamp Preparation
10X1010-A-2	Stabilized Light Source - Assembly Drawing
10X1010-T-1	Stabilized Light Source - Check-out Proceedure
GPR 2379	Photograph of an assembled light source
10X1170-S-1	Stabilized Light Source Power Supply - 60 pps - Single Output Model Schematic

10X1010-S-1

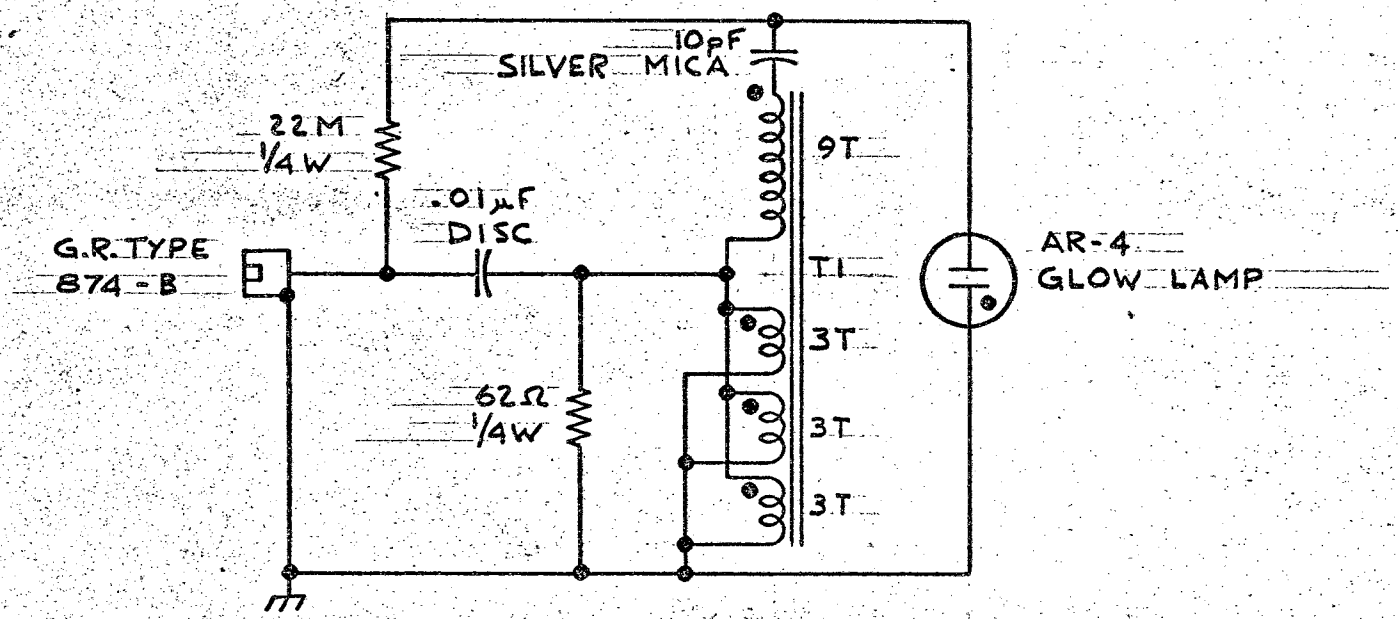

NOTES-
1) T1 - SEE 10X1010-D-1
2) PARTS MOUNT IN BARREL 10X1010-M-3
3) AR-4 LAMP - SEE 10X1010-A-2

					SHWN. ON		STABILIZED LIGHT SOURCE
					ACCT. NO.		SCHEMATIC
					SER. NO.		
					DATE ISSD.		DRWN. BY R.A. CASE — DATE 9-16-63 — LAWRENCE RADIATION LABORATORY UNIVERSITY OF CALIFORNIA BERKELEY
					DATE REQD.		CHKD. BY RFT — SCALE ~
					NO. REQD.		APPR. RFTusting 9-16-63 — 10X1010-S-1
CHG.	DRWN. BY	CHKD. BY	DATE	CHANGES	DEL. TO		ENGR. R. TUSTING

DIETERICH-POST CLEARPRINT 1000 H

SHOWN ON				ACC'T NO.	SER. NO.	DATE ISSUED	DATE REQ'D	NO. REQ'D	DELIVER TO	10X1010-M-1
								MATERIAL	STAINLESS STEEL	

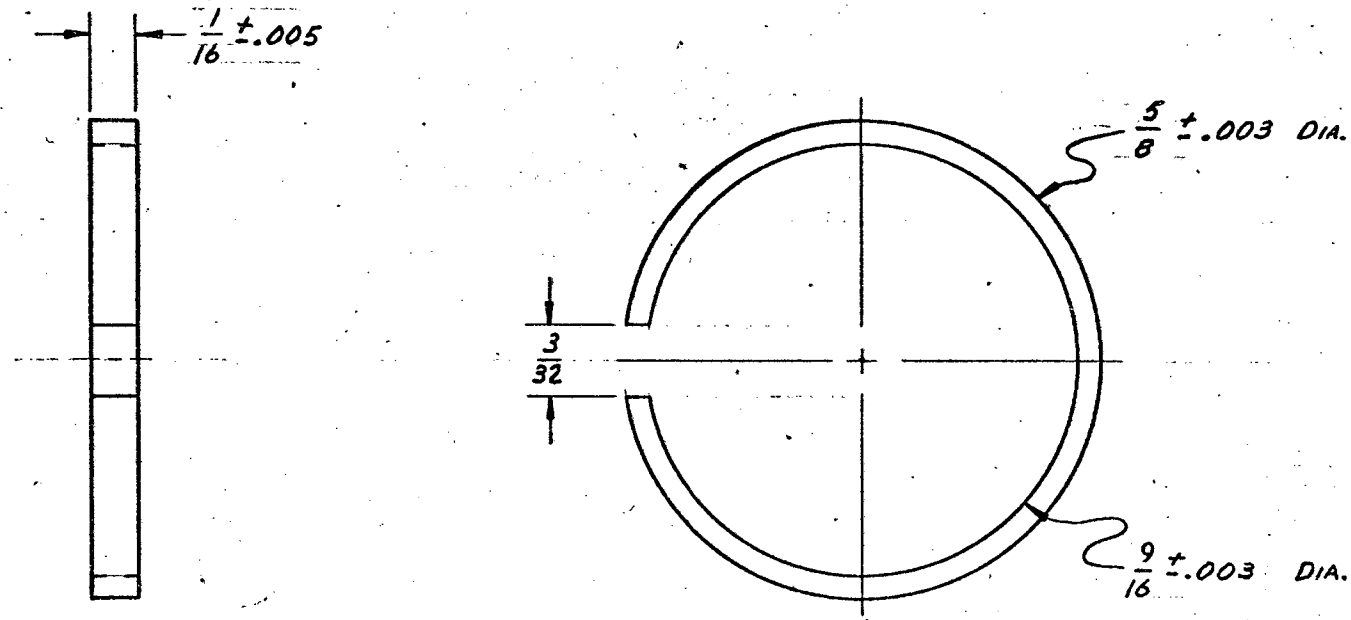

Change Letter	Drawn By	Check By	Date	CHANGES

SAW CUT, FLAME CUT, SHEAR
ROUGH MACHINE
AVERAGE MACHINE
SMOOTH MACHINE

UNLESS OTHERWISE SPECIFIED
1. TOLERANCES ± ON DIMENSIONS
2. BREAK EDGES 1/64 MAX.
3. 30° CHAMFER ENDS OF ALL SCREW THREADS
4. 1½ PITCH THREAD RELIEF WITH ROUND NOSE TOOL ON MACH. CUT SCREW THREADS

SCALE 4/1		STABILIZED LIGHT SOURCE
DESIGN ACC'T NO.	DATE	GROUND RING
DRAWN BY R.A. CASE	8-7-63	
CHECK BY RFTusting	8-26-63	LAWRENCE RADIATION LABORATORY UNIVERSITY OF CALIFORNIA
APPR. BY RFT	8-26-63	10X1010-M-1

SHOWN ON				ACC'T NO.	SER. NO.	DATE ISSUED	DATE REQ'D	NO. REQ'D	DELIVER TO	10X1010-M-2
								MATERIAL	STAINLESS STL.	

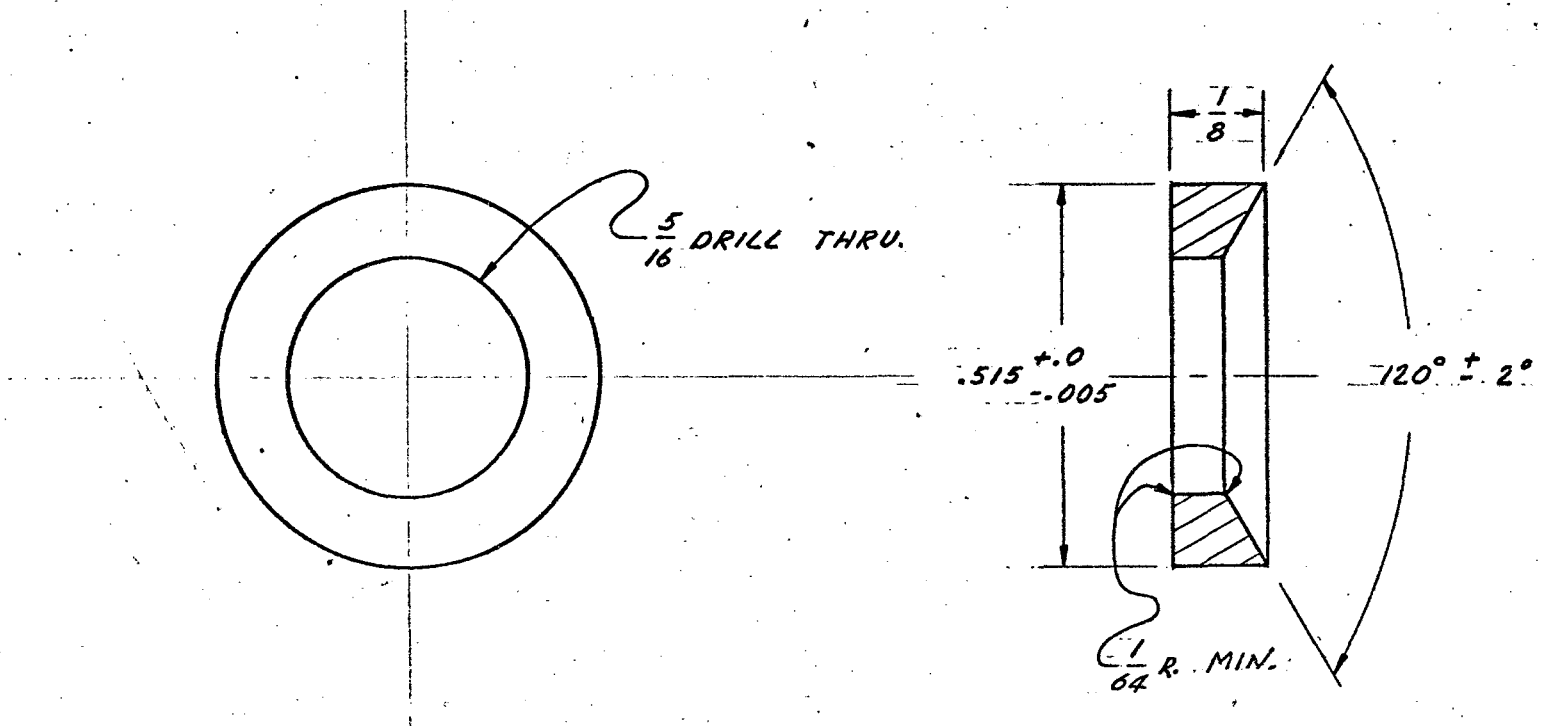

Change Letter	Drawn By	Check By	Date	CHANGES

SAW CUT, FLAME CUT, SHEAR
ROUGH MACHINE
AVERAGE MACHINE
SMOOTH MACHINE

UNLESS OTHERWISE SPECIFIED
1. TOLERANCES ON DIMENSIONS ± 1/64
2. BREAK EDGES 1/64 MAX.
3. 30° CHAMFER ENDS OF ALL SCREW THREADS
4. 1½ PITCH THREAD RELIEF WITH ROUND NOSE TOOL ON MACH. CUT SCREW THREADS

SCALE		
DESIGN ACC'T NO.	DATE	
DRAWN BY R. A. CASE	7-31-63	
CHECK BY RFTusting	8-26-63	
APPR. BY RFT	8-26-63	

STABILIZED LIGHT SOURCE
LAMP RETAINING RING

LAWRENCE RADIATION LABORATORY
UNIVERSITY OF CALIFORNIA

10X1010-M-2

SHOWN ON				ACC'T NO.	SER. NO.	DATE ISSUED	DATE REQ'D	NO. REQ'D	DELIVER TO	10X1010-M-3
								MATERIAL	$\frac{5}{8}$ DIA. ROD 6061 ALLOY	

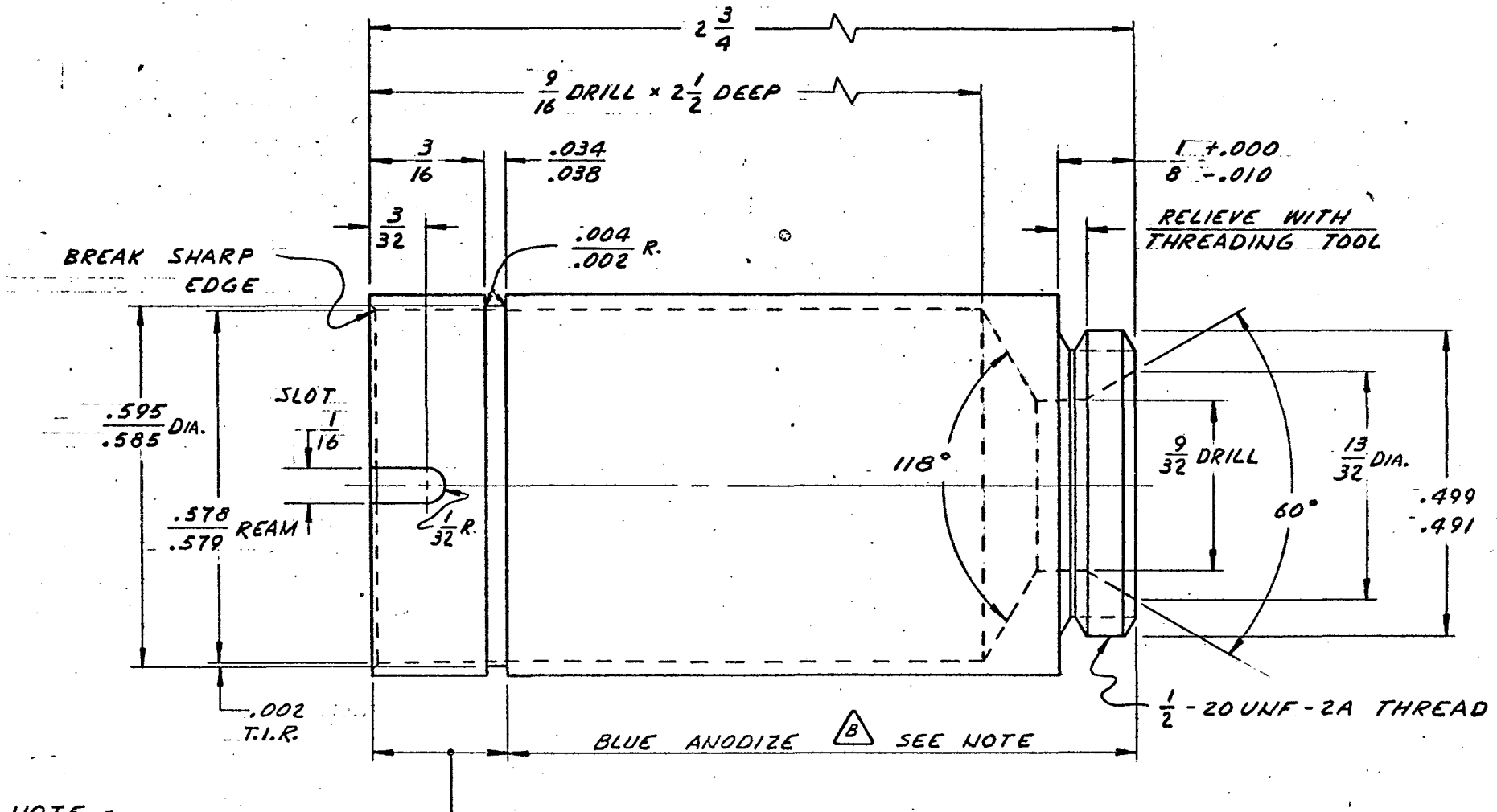

NOTE -
1) SNAP RING GROOVE & END NOT TO BE ANODIZED

63 ✓ ALL OVER

Change Letter	Drawn By	Check By	Date	CHANGES

SAW CUT, FLAME CUT, SHEAR
ROUGH MACHINE
AVERAGE MACHINE
SMOOTH MACHINE

UNLESS OTHERWISE SPECIFIED
1. TOLERANCES ON DIMENSIONS ±.010
2. BREAK EDGES 1/64 MAX.
3. 30° CHAMFER ENDS OF ALL SCREW THREADS
4. ~~[illegible]~~

SCALE 4/1		
DESIGN ACC'T NO.	DATE	
DRAWN BY R.A. CASE	8-14-63	
CHECK BY RFTusting	8-27-63	
APPR. BY RFT	8-27-63	

STABILIZED LIGHT SOURCE
BARREL

LAWRENCE RADIATION LABORATORY
UNIVERSITY OF CALIFORNIA

10X1010-M-3

SHOWN ON				ACC'T NO.	SER. NO.	DATE ISSUED	DATE REQ'D	NO. REQ'D	DELIVER TO	10X1010-M-4
								MATERIAL	$\frac{1}{32}$" FIBERGLASS	

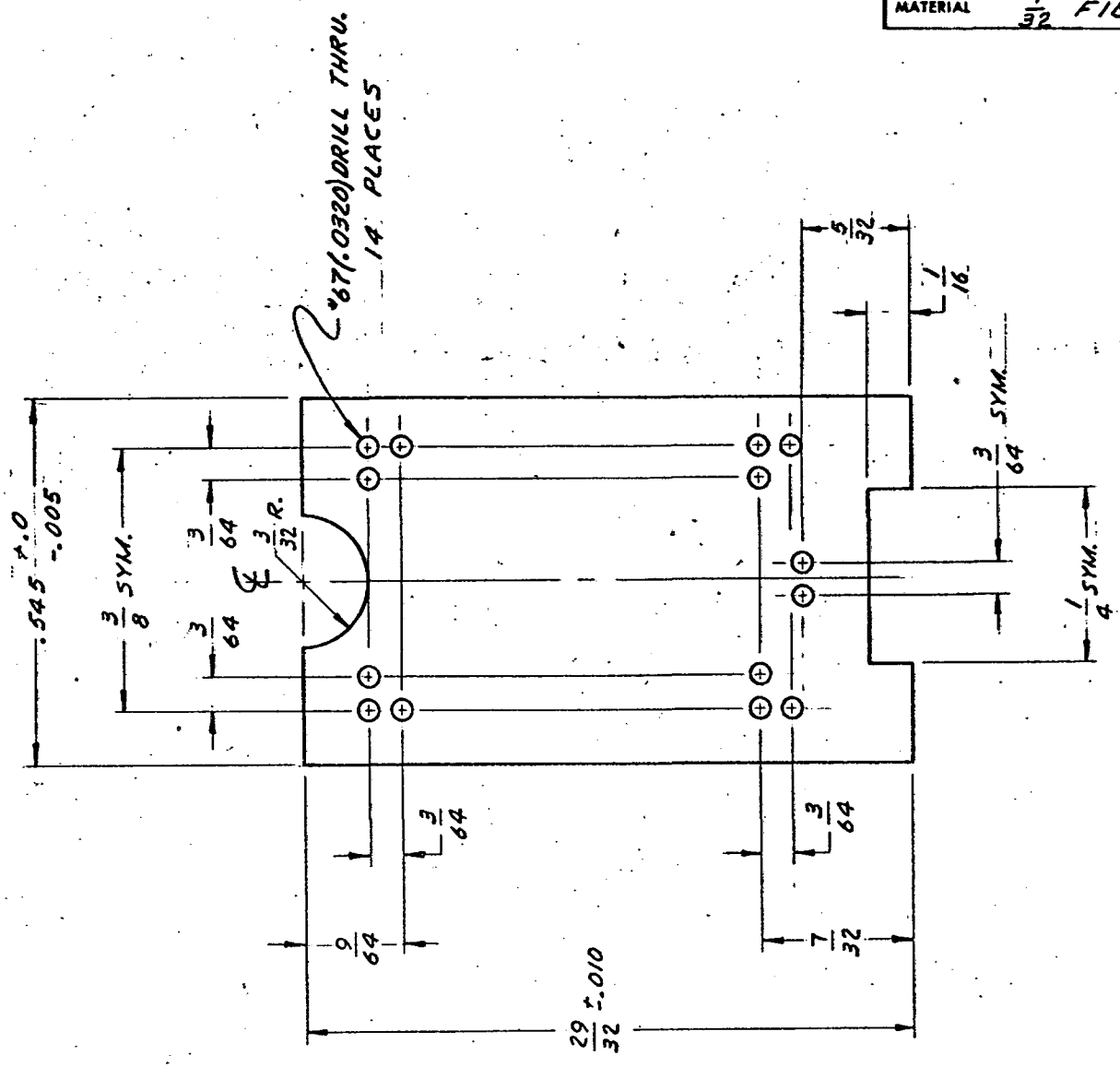

Change Letter	Drawn By	Check By	Date	CHANGES

SAW CUT, FLAME CUT, SHEAR
ROUGH MACHINE
AVERAGE MACHINE
SMOOTH MACHINE

UNLESS OTHERWISE SPECIFIED
1. TOLERANCES ± ON DIMENSIONS
2. BREAK EDGES 1/64 MAX.
3. 30° CHAMFER ENDS OF ALL SCREW THREADS
4. 1½ PITCH THREAD RELIEF WITH ROUND NOSE TOOL ON MACH. CUT SCREW THREADS

SCALE 4/1		
DESIGN ACC'T NO.	DATE	
DRAWN BY R.A. CASE	8-7-63	
CHECK BY RFTusting	8-26-63	
APPR. BY RFT	8-26-63	

STABILIZED LIGHT SOURCE
COMPONENT BOARD

LAWRENCE RADIATION LABORATORY
UNIVERSITY OF CALIFORNIA

10X1010-M-4

Change Letter	Drawn By	Check By	Date	CHANGES	MATERIAL 1/8" GUM RUBBER	10X1010-M-5

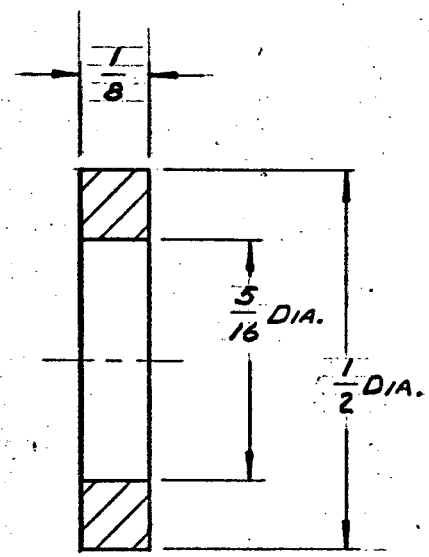

SURFACE TREATMENT	IDENTIFICATION	FINISHES	NOTES—UNLESS OTHERWISE SPECIFIED	SHOP ORDERS	SCALE 4 / 1
SANDBLAST ☐ DEGREASE ☐	PART NO. WHERE SHOWN	SAW CUT FLAME CUT SHEAR X	1. TOLERANCES ON DIMENSIONS ± 1/64	SERIAL NO.	DO NOT SCALE THIS DWG.
PRIME ____ COATS ____	PAINT ☐ ENGRAVE ☐	ROUGH MACHINE ∮ = 250 √	2. BREAK EDGES 1/64 MAXIMUM	DATE ISSUED	RADIATION LABORATORY UNIVERSITY OF CALIFORNIA
FINISH ____ COATS ____	STAMP ☐ INSCRIBE ☐	AVERAGE MACHINE ∮ = 125 √	3. 30° CHAMFER ENDS OF ALL SCREW THREADS	DATE REQ'D	
OTHER ____	OTHER ____	SMOOTH MACHINE ∮∮ = 63 √	4. 1½ PITCH THREAD RELIEF WITH ROUND NOSE TOOL ON ALL MACHINE CUT SCREW THREADS	NO. REQ'D	10X1010-M-5
	HEIGHT ____		5. ON WELDMENTS, REMOVE SHARP EDGES, BURRS, LOOSE SCALE AND WELD SPATTER	DELIVER TO	
	COLOR ____		6. VISUAL COMPARISON OF FINISHES WITH G.E. "SURFACE ROUGHNESS SCALE" NO. 8665947G1 IS ACCEPTABLE.		
	LABEL ____ YES ☐ NO ☐				

RL-330 (Size 1)

SHOWN ON	DESIGN ACCOUNT NO.	DATE
	DRAWN BY R.A. CASE	8-27-63
	CHECKED BY RF Tusting	8-27-63

STABILIZED LIGHT SOURCE

1/8" RUBBER WASHER

UCID-2059 EE-962 Pg. 1

SHOWN ON				ACC'T NO.	SER. NO.	DATE ISSUED	DATE REQ'D	NO. REQ'D	DELIVER TO	10X1010-M-6

MATERIAL .010 RUBBER

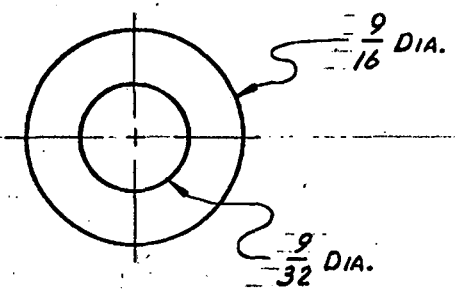

Change Letter	Drawn By	Check By	Date	CHANGES

SAW CUT, FLAME CUT, SHEAR
ROUGH MACHINE
AVERAGE MACHINE
SMOOTH MACHINE

UNLESS OTHERWISE SPECIFIED
1. TOLERANCES ON DIMENSIONS ±
2. BREAK EDGES 1/64 MAX.
3. 30° CHAMFER ENDS OF ALL SCREW THREADS
4. 1½ PITCH THREAD RELIEF WITH ROUND NOSE TOOL ON MACH. CUT SCREW THREADS

SCALE 2/1

DESIGN ACC'T NO.	DATE
DRAWN BY R.A. CASE	8-7-63
CHECK BY RF Tusting	8-26-63
APPR. BY RFT	8-26-63

STABILIZED LIGHT SOURCE
10 MIL RUBBER WASHER

LAWRENCE RADIATION LABORATORY
UNIVERSITY OF CALIFORNIA

10X1010-M-6

SHOWN ON				ACC'T NO.	SER. NO.	DATE ISSUED	DATE REQ'D	REQ'D NO.	DELIVER TO	4X3581

MATERIAL $\frac{5}{8}$ OD X $\frac{1}{16}$ WALL BRASS TUBING

MATERIAL $\frac{1}{32}$ THK BLACK BAKELITE

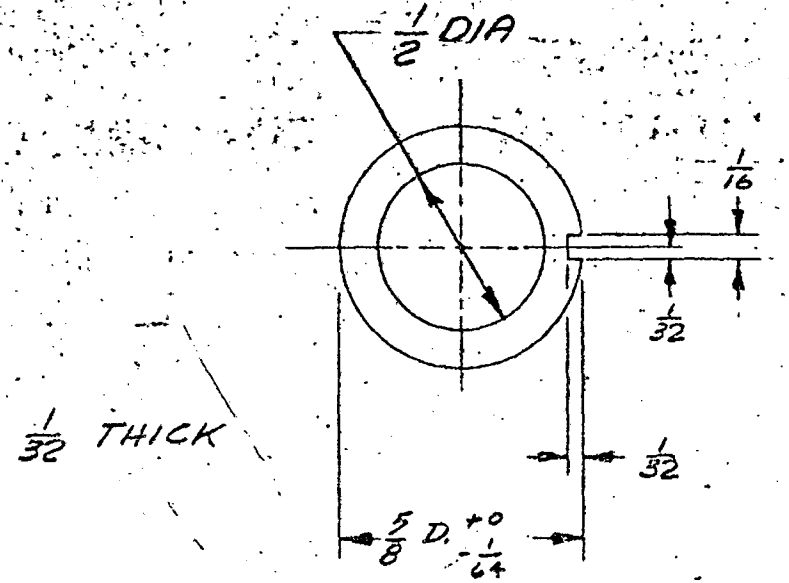

ITEM - 1
FERRULE

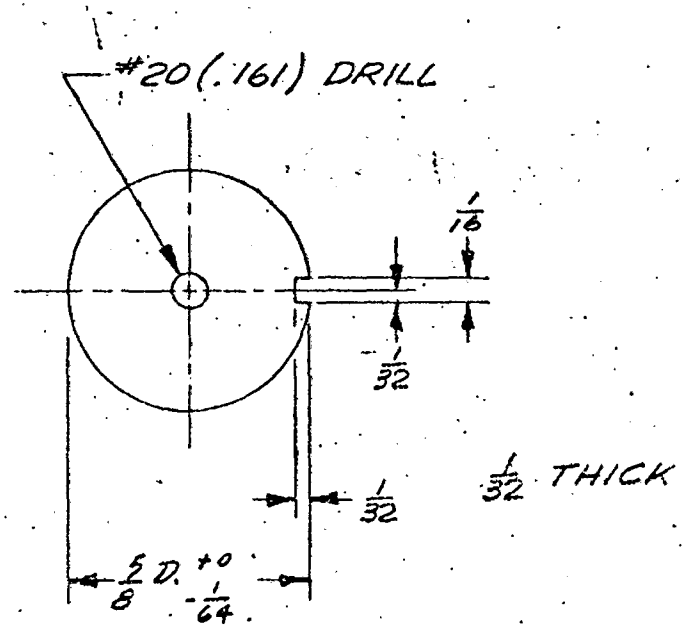

ITEM - 2
LIGHT SHIELD

1 - CNTG

Change Letter	Drawn By	Check By	Date	CHANGES
B	AR D	12-30-63		ADD TOLER TO 5/8 D. PER M. J.
A	DOR			

SAW CUT, FLAME CUT, SHEAR
ROUGH MACHINE
AVERAGE MACHINE
SMOOTH MACHINE

UNLESS OTHERWISE SPECIFIED
1. TOLERANCES ON DIMENSIONS ±
2. BREAK EDGES 1/64 MAX.
3. 30° CHAMFER ENDS OF ALL SCREW THREADS
4. 1½ PITCH THREAD RELIEF WITH ROUND NOSE TOOL ON MACH. CUT SCREW THREADS

SCALE 2 X		
DESIGN ACC'T NO. 4310-02	DATE	
DRAWN BY OB	4/5/61	
CHECK BY D.D.		
APPR. BY		

PULSED LIGHT SOURCE
FERRULE & LIGHT SHIELD

RADIATION LABORATORY
UNIVERSITY OF CALIFORNIA

4X3581B

SHOWN ON				ACC'T NO.	SER. NO.	DATE ISSUED	DATE REQ'D	NO. REQ'D	DELIVER TO	10X1010-A-1

10X1010-M-1	GROUND RING
10X1010-M-2	LAMP RETAINING RING
1	.029 STAINLESS WIRE LRL
1	#9505-10068 COMP. 302
	HARD TEMPER

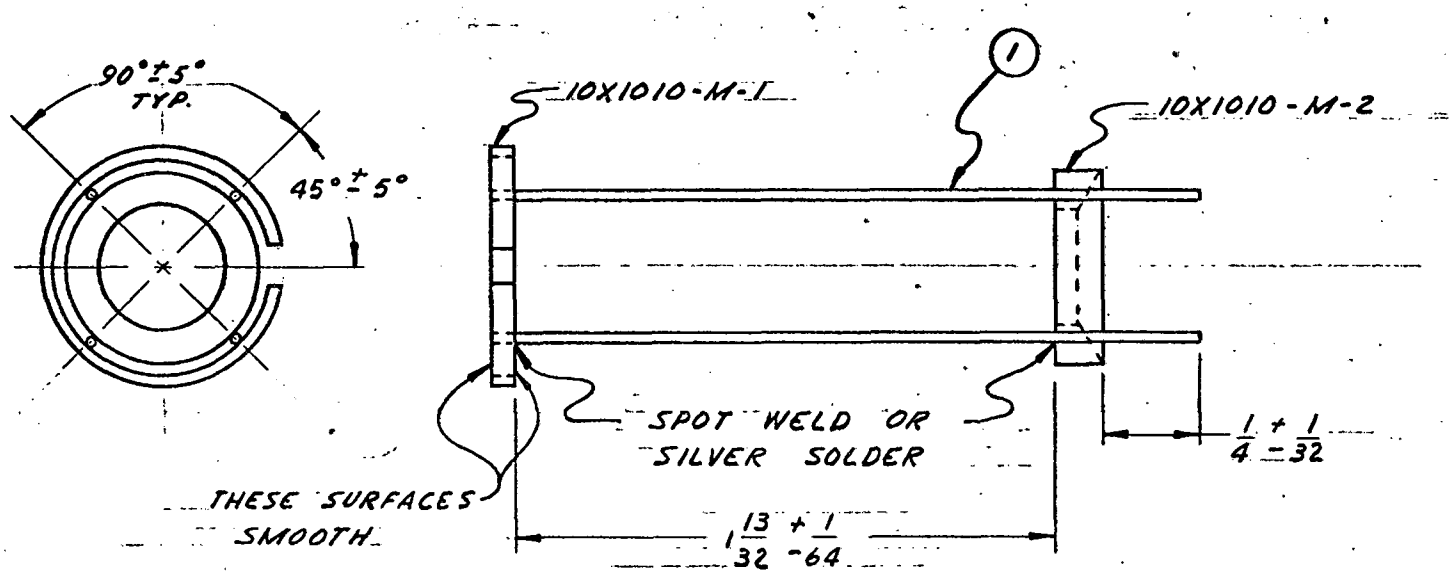

.0005 TO .001 CU. PLATE

Change Letter	Drawn By	Check By	Date	CHANGES

SAW CUT, FLAME CUT, SHEAR
ROUGH MACHINE
AVERAGE MACHINE
SMOOTH MACHINE

UNLESS OTHERWISE SPECIFIED
1. TOLERANCES ON DIMENSIONS ±
2. BREAK EDGES 1/64 MAX.
3. 30° CHAMFER ENDS OF ALL SCREW THREADS
4. 1½ PITCH THREAD RELIEF WITH ROUND NOSE TOOL ON MACH. CUT SCREW THREADS

SCALE	2/1	
DESIGN ACC'T NO.		DATE
DRAWN BY	R.A. CASE	8-15-63
CHECK BY	RF Tusting	8-26-63
APPR. BY	RFT	8-26-63

STABILIZED LIGHT SOURCE
LAMP SUPPORT ASSEMBLY

LAWRENCE RADIATION LABORATORY
UNIVERSITY OF CALIFORNIA

10X1010-A-1

UCID-2059 EE-962 Pg. 10

SUBJECT	SKETCH	JOB ORDER INFORMATION	
STABILIZED LIGHT SOURCE BOARD LAYOUT	RADIATION LABORATORY UNIVERSITY OF CALIFORNIA - BERKELEY	JOB NO.	TAG NO.
DRAWN BY R. A. CASE		SERIAL NO.	NO. REQD.
		DATE ISSUED	DATE REQD.
DATE 8-16-63 / BUILDING NO. 80 / ROOM NO. 024	APPROVED BY RFTusting / DATE 8-26-63	DELIVER TO	

10X1010-L-1

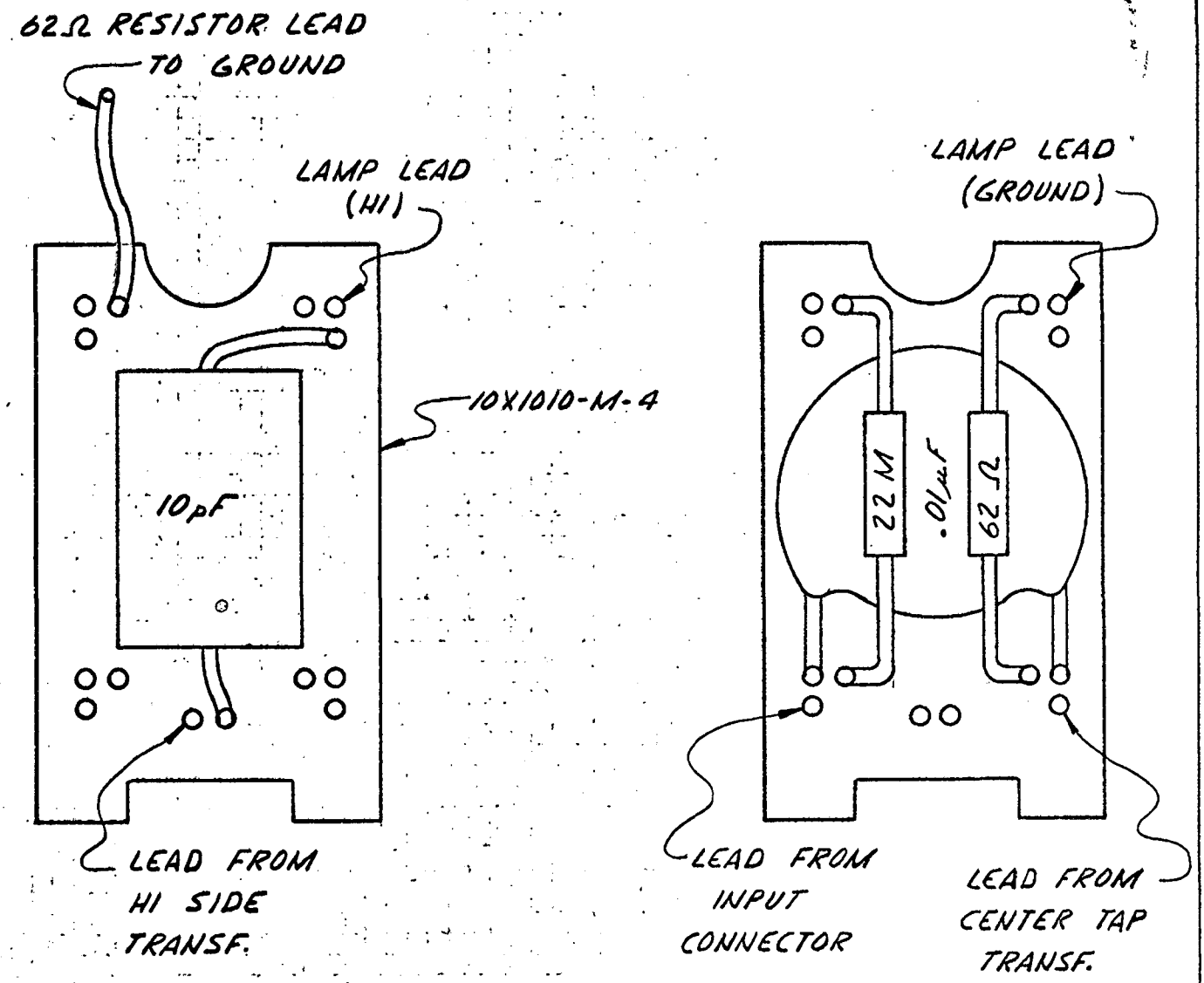

NOTES -

1) MAXIMIZE CLEARANCE BETWEEN COMPONENTS & BETWEEN COMPONENTS & BARREL
2) LEAVE ROOM FOR CONNECTION OF WIRES TO BOARD IN FINAL ASSEMBLY

SKETCH NUMBER 10X1010-L-1

RL-112

Stabilized Light Source
10X101-0-D-1

October 17, 1963
Physics Instrumentation Research
Robert F. Tusting
Page 1 of 2

RFT

INSTRUCTIONS FOR WINDING 4:1 STEP-UP TRANSFORMER

1. Fabricate the core by gluing one .500 O.D., .281" I.D. by .250 core and one .500 O.D., .281" I.D. by .156 core together. Be sure that the outer surfaces of the cores are even.

   Suitable materials are Feroxcube type 102 or 4A or Indiana General type H ferrite. Cores must have sharp corners removed, and have outer diameters no greater than .505 inches.

2. Cut a) Three (3) pieces of #24 heavy formvar wire 3 1/4" long and strip both ends 1/4".

   b) One (1) piece of #30 Teflon Insulated wired 16" long and strip 1/4" one end.

   c) One (1) piece of #24 Teflon Insulated wire 1" long and strip 1/4" both ends.

3. Twist together one end of each of the five wires, trim, and solder, leaving no sharp points.

4. Wind one of the 3-turn primary windings per sketch below. The junction of the five wires should not extend beyond the core.

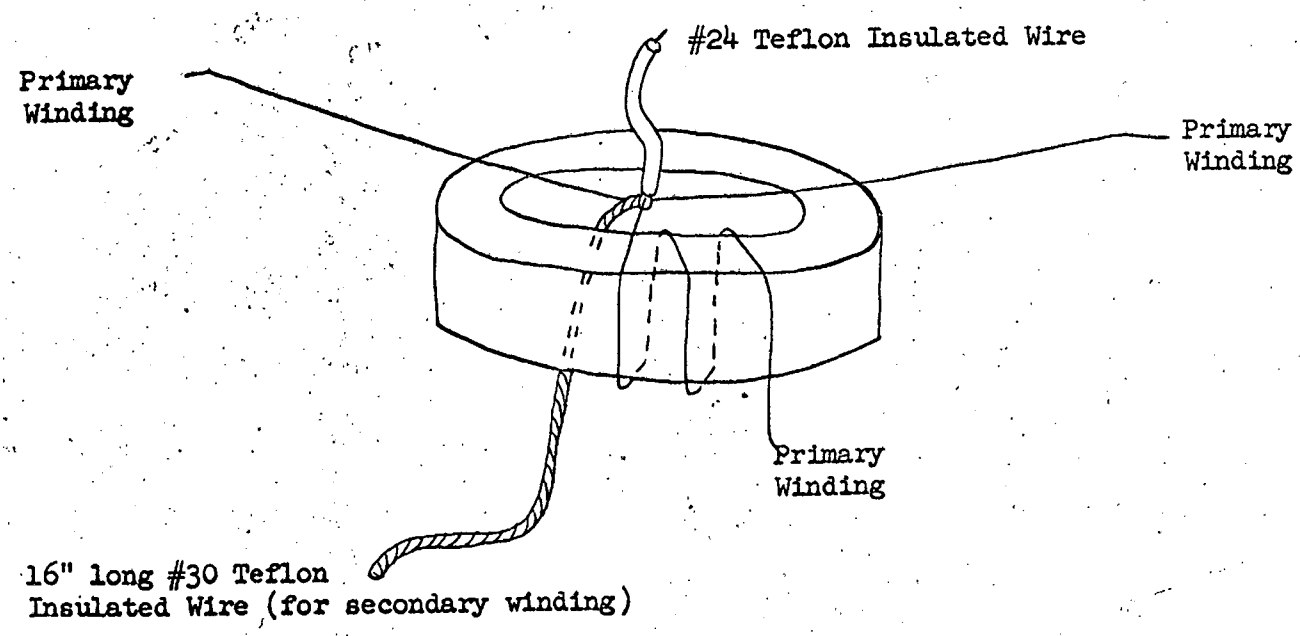

RFT

INSTRUCTIONS FOR WINDING 4:1 STEP-UP TRANSFORMER

5. Wind other two primary windings symmetrically with the first winding per sketch below.

3-turn Primary Winding (typical)

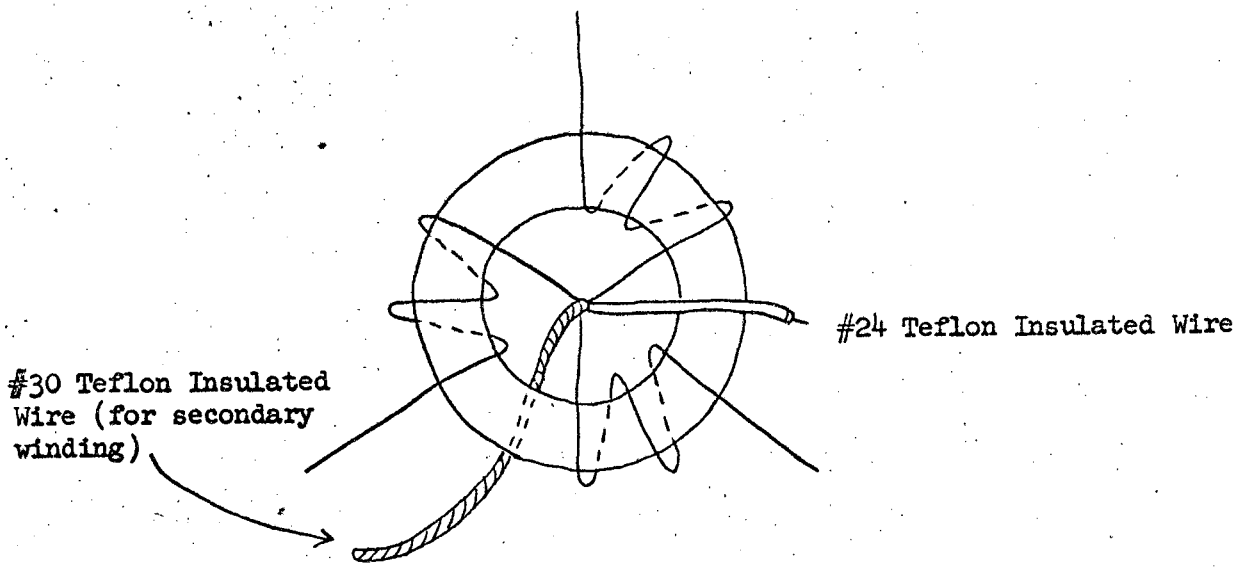

6. Wind the secondary 9-turn winding bifilar with the 3 primary windings: That is, each turn of the secondary should be adjacent to a corresponding turn of the primary. See sketch below. Make sure that no one turn is wound so that it crosses another turn.

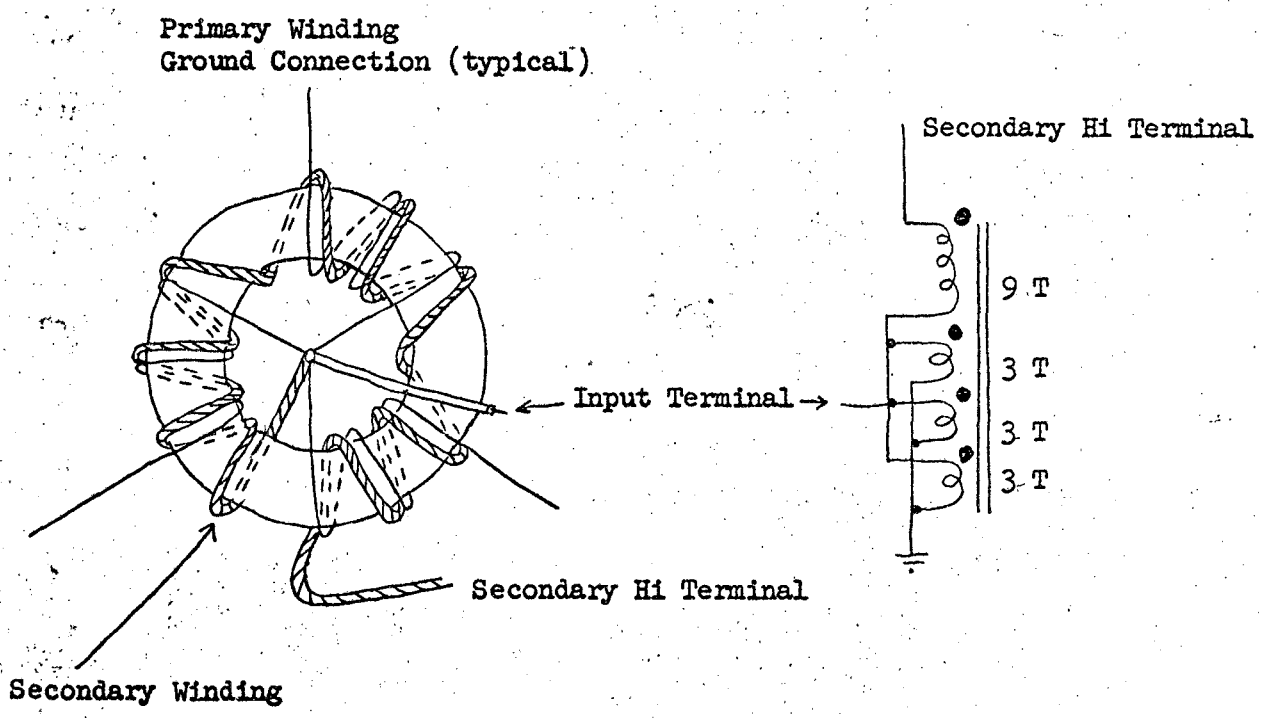

SUBJECT	SKETCH	JOB ORDER INFORMATION	
Stabilized Light Source AR-4 Lamp Preparation	RADIATION LABORATORY UNIVERSITY OF CALIFORNIA - BERKELEY	JOB NO.	TAG NO.
		SERIAL NO.	NO. REQD.
DRAWN BY Robert F. Tusting		DATE ISSUED	DATE REQD.
DATE 12/6/63 · BUILDING NO. 80 · ROOM NO. 024	APPROVED BY RFT · DATE 12/6/63	DELIVER TO	

10X101-0-D-2

1. Remove base of lamp using care that the lamp is not broken and that the leads are not cut or nicked. The lamp leads should be left their original length.

2. Discard any lamps that are broken, malformed or distorted, or that have short or damaged leads.

3. Test the lamp for operation with a 300 volt battery and a series 1 megohm resistor.

4. Slide a 1/2 inch long piece of Teflon insulation over each lamp lead as far as it will go.

5. Pot the lamp with Foam Sylastic -- Dow-Corning type S 5370 per sketch below.

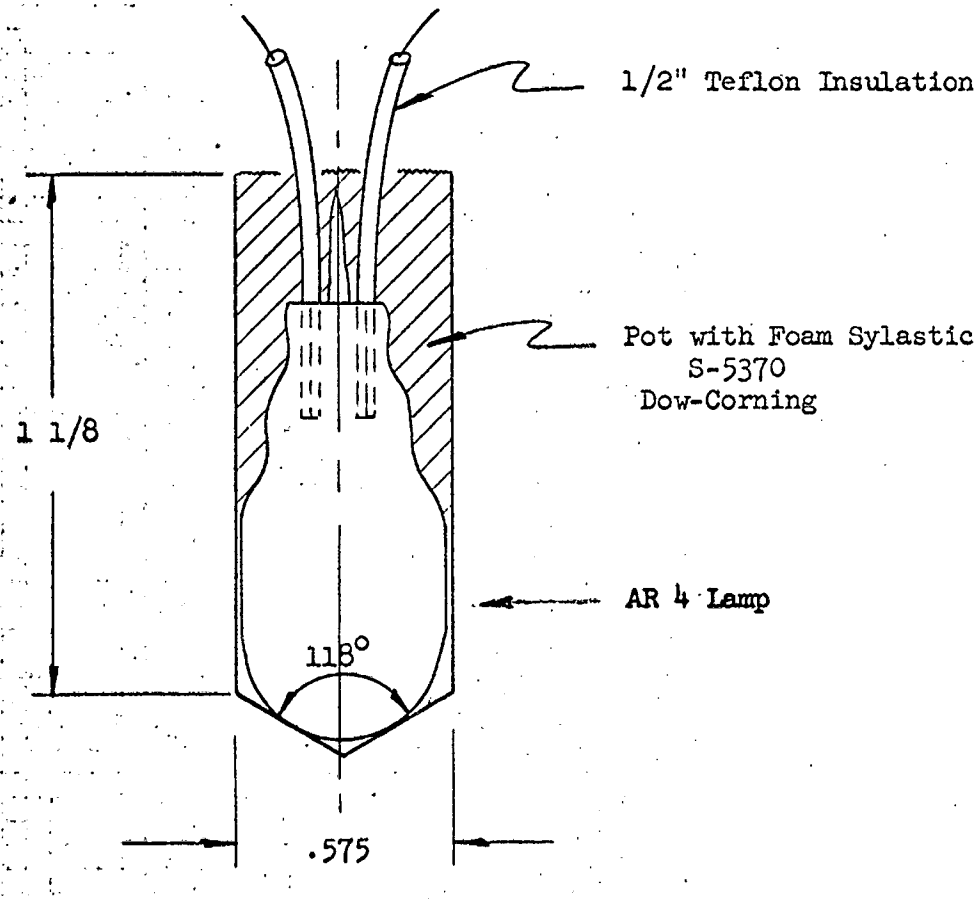

SKETCH NUMBER

RL-112

STABILIZED LIGHT SOURCE
10X1010-T-1

January 21, 1963
Physics Instrumentation
Research
R. F. Tusting
Page 1 of 4

CHECK-OUT PROCEDURE

I. Remove lamp assembly from barrel and examine the lamp, components, and wiring for poor connection, broken parts, sharp solder connections, and inadequate insulation, keeping in mind that there will be 2 kV pulses on some of the parts during operation and that any corona will reduce the stability of the light output. The majority of the defects can be found by a careful visual inspection. Below is a partial list of problems that have been found in checking out the first production run of the light sources.

A. Lamp leads not securely soldered or unable to flex sufficiently.

B. Corona from high voltage points due to close spacing and/or sharp points.

C. Damaged insulation on the transformer windings due to:

1. Formvar wire being accidently scraped,
2. Teflon insulated wire being pinched under one of the lamp support assembly wires,
3. Teflon insulated wire being pinched by the core of one of the formvar windings,
4. Teflon insulated wire being scraped by a sharp edge of the barrel as the barrel is slid over the assembly.

II. Re-install lamp assembly in the barrel, checking that 10 mil rubber washer is properly located between the lamp and the end of the barrel and that the polyethylene insulating sheet is in place. Check to see that the lamp makes good mechanical connection to the end of the barrel.

III. Test for Pulse Shape and Operating Range

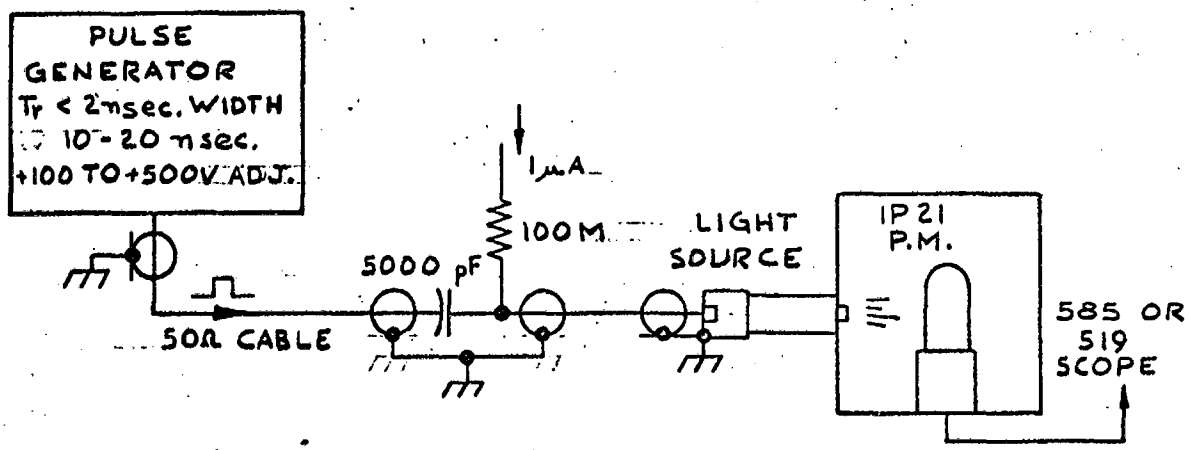

A. Set up for testing the light source for light pulse shape and voltage operating range.

B. With the pulse generator off, there should be a visible small glow between the lamp electrodes due to the 1 μA keep-alive current. The effect of the dc glow should be an apparent small increase in the noise rate of the photomultiplier. If there are large amplitude light pulses with only the keep-alive current applied to the light source, lamp is oscillating and should be replaced.

C. With the keep-alive supply on, the light source should start to light repeatedly with pulses of approximately 150 volts amplitude on the 50 ohm line. With lower voltages the light output pulse has a large delay and slow rise time. As the voltage pulse amplitude is increased, the light pulse amplitude should increase smoothly according to graph below.

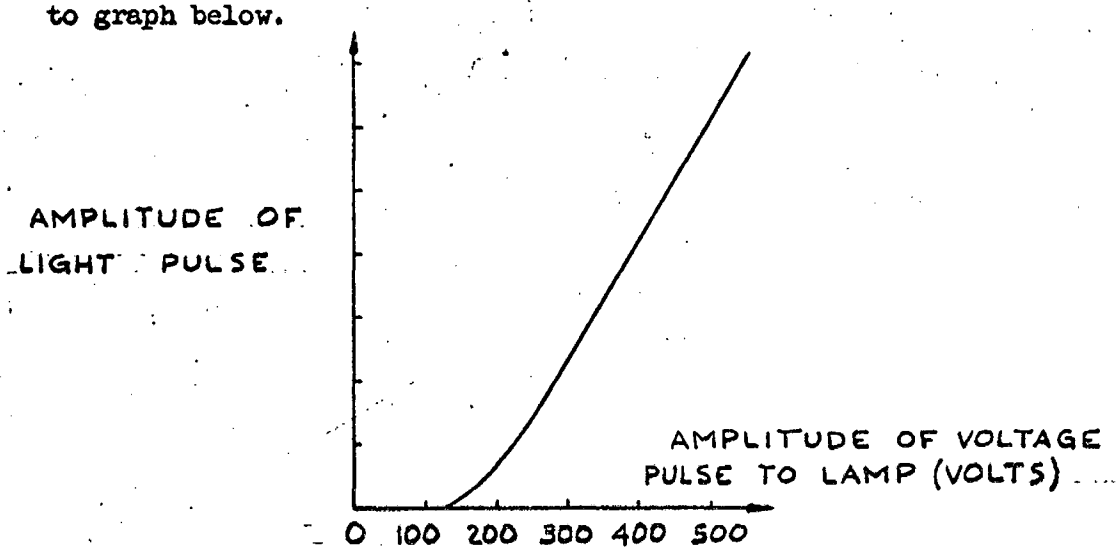

The lamp should not multiple pulse or become erratic for pulse voltages up to 500 volts. Note that at the higher voltages the light output of the lamp is more than sufficient to saturate the photomultiplier unless suitable optical attenuation is interposed between the light source and the photomultipliers. Calibrated neutral density filters are recommended.

D. The light pulse should have a rise time of less than 5 nsec and a decay time of approximately 2 μsec over the operating range of 150 to 500 volts.

IV. Test for Amplitude Stability.

A. Set up for measuring the amplitude jitter of the time integrated light output of stabilized light source.

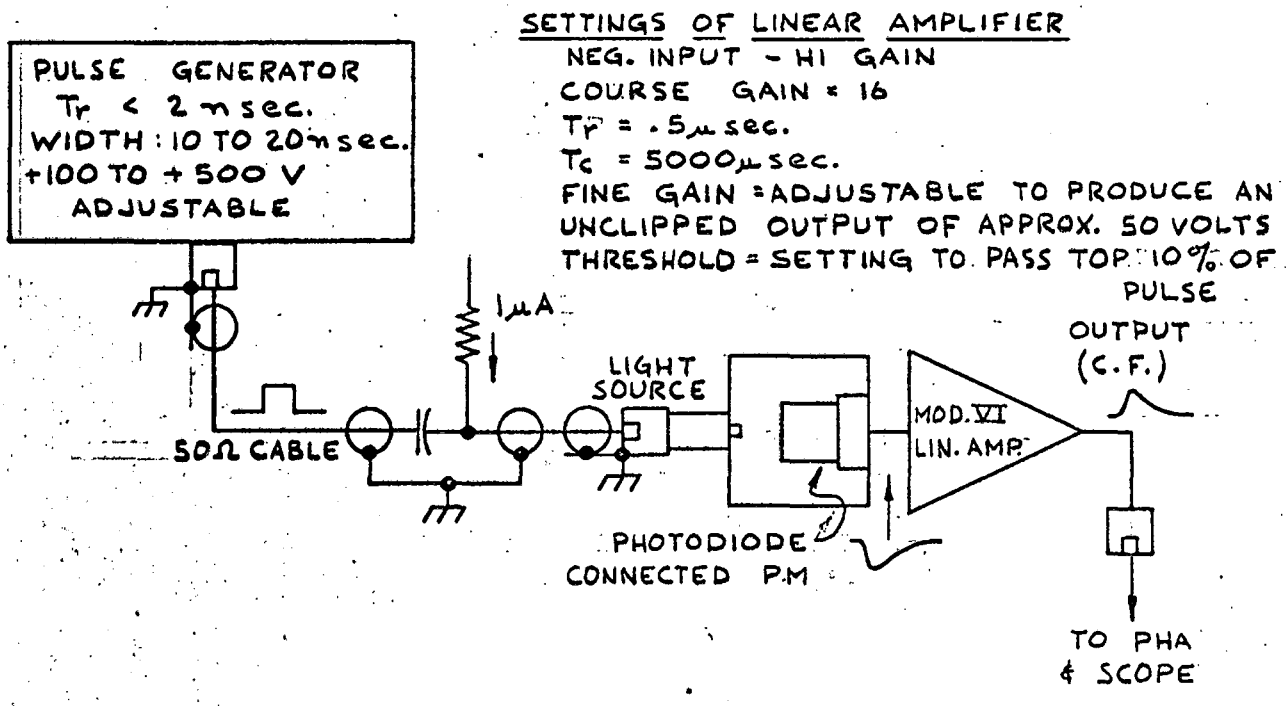

B. Measure the amplitude spread of the light pulse for two pulse voltages, 250 volts and 400 volts. A convenient method is to:

1. Adjust the threshold control for a maximum output amplitude,
2. Set the fine gain control for an output pulse

that is within the linear range of the amplifier (for example 50 volts),

3. Adjust the threshold Helipot to pass the top 10% of the pulse (5 volts in this example),
4. Set the Pulse Height Analyzer input for positive pulses and the sensitivity to approximately 5 volts per 100 channel.
5. The FWHM of the amplitude distribution is then:

$$\frac{5}{50} \times \frac{\text{No. channels between the half peak height points}}{\text{Channel No. of Peak of the distribution}}$$

The FWHM should not exceed 1/2%. The long-term stability of the system used for this measurement is not as good as a stable lamp and generator combination. Therefore, it is useful for short-term measurements only. Excessive amplitude jitter is usually caused by corona, but in some cases the lamp is responsible for the poor stability.

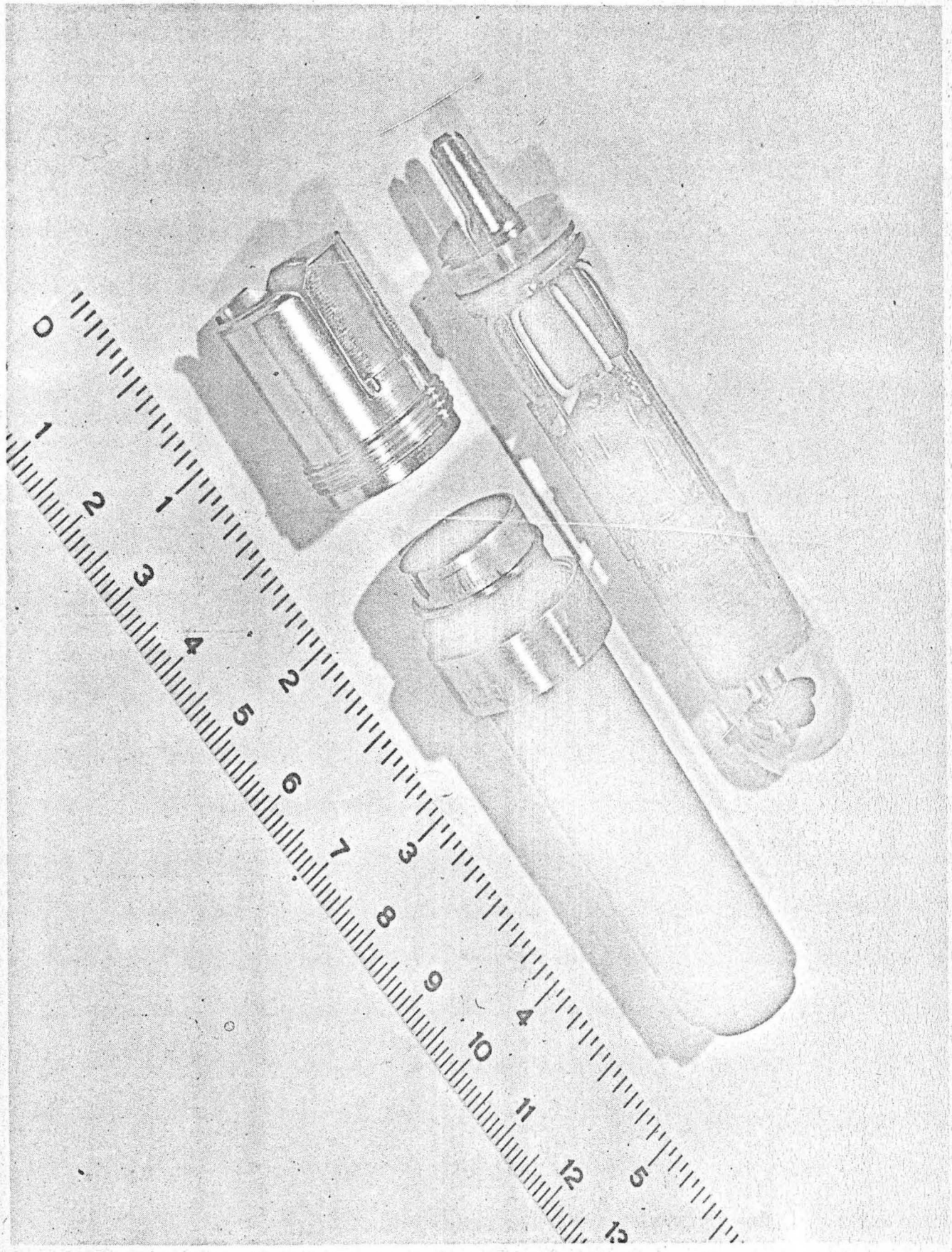

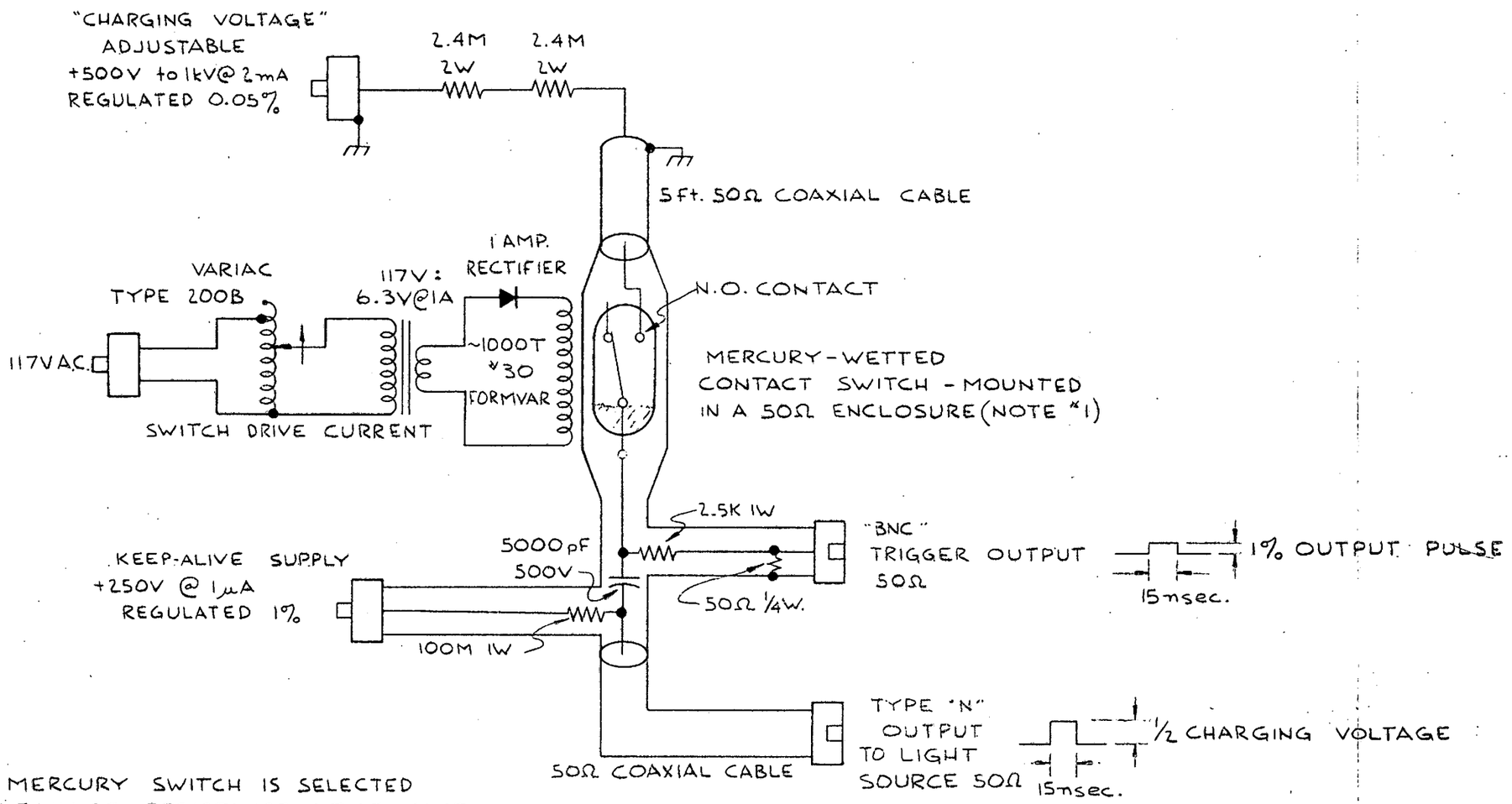

NOTES –

1) THE MERCURY SWITCH IS SELECTED FOR LEAKAGE RESISTANCE OF AT LEAST 10^{11} OHMS AT 1kV & FOR LESS THAN 0.1% PULSE AMPLITUDE JITTER AT OUTPUT

2) USE DOUBLE SHIELDED CABLE BETWEEN OUTPUT CONNECTOR & STABILIZED LIGHT SOURCE, 10X1010-S-1

CHG.	DRWN. BY	CHKD. BY	DATE	CHANGES				
					SHWN. ON		STABILIZED LIGHT SOURCE PWR. SUPPLY	
					ACCT. NO.		60 pps SINGLE OUTPUT MODEL	
					SER. NO.		SCHEMATIC	
					DATE ISSD.		DRWN. BY KAC / DATE 10-18-63	LAWRENCE RADIATION LABORATORY UNIVERSITY OF CALIFORNIA BERKELEY
					DATE REQD.		CHKD. BY / SCALE	
					NO. REQD.		APPR.	10X1170-S-1
					DEL. TO		ENGR. R.F. TUSTING	

RL-2009-1

DIETERICH-POST CLEARPRINT 1010 H

LIST OF MATERIAL

ITEM OR PART NUMBER	DESCRIPTION	
1	G.R. OUTER CONNECTOR 874-60-3	
2	G.R. INNER CONNECTOR 874-61-4 (MOD.)	
3	G.R. INSULATING BEAD 874-70	
4	8-32 NUT ($\frac{1}{4}$" ACROSS FLATS) $\frac{1}{16}$" THICK	
5	.015 POLYETHYLENE $\frac{3}{4}$" W. × 2" LG.	
6	G.R. SNAP RING 874-81	
7	G.R. COUPLING NUT 874-62	
4X3581	LIGHT SHIELD	
10X1010-M-5	$\frac{1}{8}$" RUBBER WASHER	
10X1010-D-1	STEP-UP TRANSFORMER	
10X1010-L-1	COMPONENT LAYOUT	
10X1010-A-1	LAMP SUPPORT ASSEMBLY	
10X1010-D-2	AR4 LAMP	
10X1010-M-6	10 MIL RUBBER WASHER	
10X1010-M-3	BARREL	

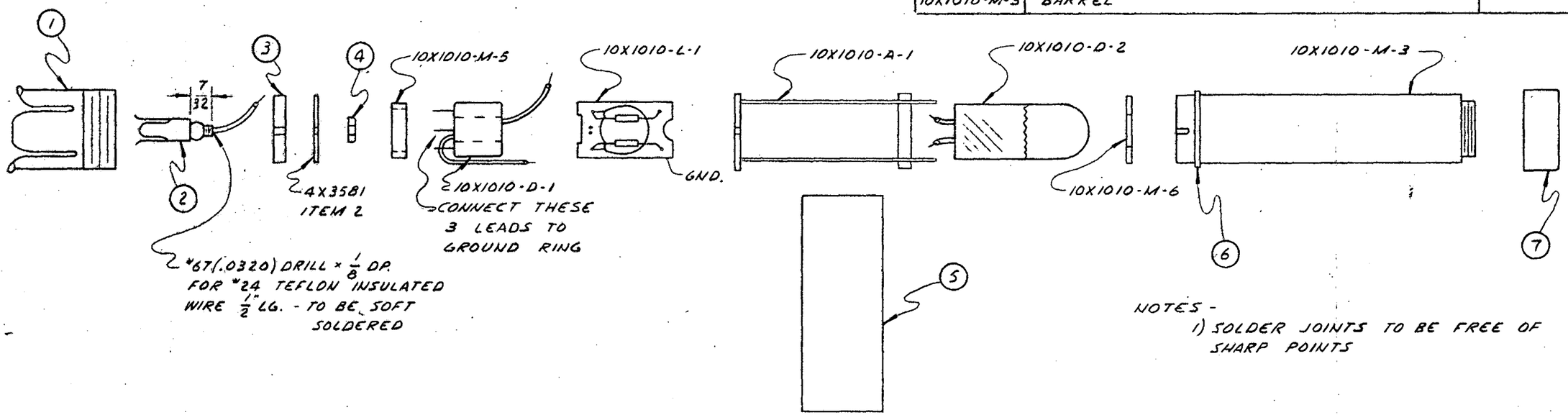

NOTES -
1) SOLDER JOINTS TO BE FREE OF SHARP POINTS

CHANGE LETTER	DRAWN BY	CHECK BY	DATE	CHANGES

SURFACE TREATMENT
SANDBLAST ☐ DEGREASE ☐
PRIME ____ COATS ____
FINISH ____ COATS ____
OTHER ____

IDENTIFICATION
PART NO. WHERE SHOWN
PAINT ☐ ENGRAVE ☐
STAMP ☐ INSCRIBE ☐
OTHER ____
HEIGHT ____
COLOR ____
LABEL ____ YES ☐ NO ☐

FINISHES
SAW CUT / FLAME CUT / SHEAR ✳
ROUGH MACHINE = 250 √
AVERAGE MACHINE = 125 √
SMOOTH MACHINE = 63 √

NOTES—UNLESS OTHERWISE SPECIFIED
1. TOLERANCES ON DIMENSIONS ± ____
2. BREAK EDGES 1/64 MAXIMUM
3. 30° CHAMFER ENDS OF ALL SCREW THREADS
4. 1½ PITCH THREAD RELIEF WITH ROUND NOSE TOOL ON ALL MACHINE CUT SCREW THREADS
5. ON WELDMENTS, REMOVE SHARP EDGES, BURRS, LOOSE SCALE AND WELD SPATTER
6. VISUAL COMPARISON OF FINISHES WITH G.E. "SURFACE ROUGHNESS SCALE" NO. 8665947G1 IS ACCEPTABLE.

SHOP ORDERS
SERIAL NO.
DATE ISSUED
DATE REQ'D
NO. REQ'D
DELIVER TO

SCALE ~
DO NOT SCALE THIS DWG.

LAWRENCE RADIATION LABORATORY
UNIVERSITY OF CALIFORNIA

10X1010-A-2

SHOWN ON	DESIGN ACCOUNT NO.	DATE
	DRAWN BY R.A. CASE	8-19-63
	CHECKED BY [illegible]	[illegible]

STABILIZED LIGHT SOURCE ASSEMBLY

This report was prepared as an account of Government sponsored work. Neither the United States, nor the Commission, nor any person acting on behalf of the Commission:

A. Makes any warranty or representation, expressed or implied, with respect to the accuracy, completeness, or usefulness of the information contained in this report, or that the use of any information, apparatus, method, or process disclosed in this report may not infringe privately owned rights; or

B. Assumes any liabilities with respect to the use of, or for damages resulting from the use of any information, apparatus, method, or process disclosed in this report.

As used in the above, "person acting on behalf of the Commission" includes any employee or contractor of the Commission, or employee of such contractor, to the extent that such employee or contractor of the Commission, or employee of such contractor prepares, disseminates, or provides access to, any information pursuant to his employment or contract with the Commission, or his employment with such contractor.

LRL