UCRL /0030

# UNIVERSITY OF CALIFORNIA

## Ernest O. Lawrence Radiation Laboratory

TWO-WEEK LOAN COPY

*This is a Library Circulating Copy which may be borrowed for two weeks. For a personal retention copy, call Tech. Info. Division, Ext. 5545*

BERKELEY, CALIFORNIA

## DISCLAIMER

This document was prepared as an account of work sponsored by the United States Government. While this document is believed to contain correct information, neither the United States Government nor any agency thereof, nor the Regents of the University of California, nor any of their employees, makes any warranty, express or implied, or assumes any legal responsibility for the accuracy, completeness, or usefulness of any information, apparatus, product, or process disclosed, or represents that its use would not infringe privately owned rights. Reference herein to any specific commercial product, process, or service by its trade name, trademark, manufacturer, or otherwise, does not necessarily constitute or imply its endorsement, recommendation, or favoring by the United States Government or any agency thereof, or the Regents of the University of California. The views and opinions of authors expressed herein do not necessarily state or reflect those of the United States Government or any agency thereof or the Regents of the University of California.

for publication in Review Scientific Instruments

UCRL-10030

UNIVERSITY OF CALIFORNIA

Lawrence Radiation Laboratory

Berkeley, California

Contract No. W-7405-eng-48

# A THIN SEMICONDUCTOR TRANSMISSION-COUNTER SYSTEM FOR NUCLEAR PARTICLE DETECTION

Jack H. Elliott and Richard H. Pehl

January 24, 1962

# A THIN SEMICONDUCTOR TRANSMISSION-COUNTER SYSTEM FOR NUCLEAR PARTICLE DETECTION

Jack H. Elliott and Richard H. Pehl

Lawrence Radiation Laboratory
University of California
Berkeley, California

January 24, 1962

## ABSTRACT

Sturdy silicon transmission counters as thin as 0.0012 in. were produced and used in conjunction with a passive pulse-adder circuit which combined the dE/dx and E pulses so that the nonuniformity and energy straggling in the transmission counter would not decrease the resolution of the energy spectra. Construction and performance of these counters are described.

# A THIN SEMICONDUCTOR TRANSMISSION-COUNTER SYSTEM FOR NUCLEAR PARTICLE DETECTION *

Jack H. Elliott and Richard H. Pehl

Lawrence Radiation Laboratory
University of California
Berkeley, California

January 24, 1962

## INTRODUCTION

The advantages of semiconductor dE/dx transmission and E counters for nuclear particle detection and identification have been described by H. E. Wegner.[1] Planar silicon surface-barrier transmission counters as thin as 0.002 in. have been prepared elsewhere by lapping and etching methods.[1,2] Because silicon slices are brittle and break readily when made so thin, we decided to lap a hole in the center of a 0.010- to 0.014-in. silicon slice to give a thin central region supported by a thicker outer ring where contacts could safely be made. See Fig. 1.

The uniformity of thickness obtained by hole lapping has not yet matched that of the lapped planar counters. However, the loss of resolution in the E counter due to a nonuniform transmission counter was compensated by adding the pulses from both counters in the appropriate ratio.

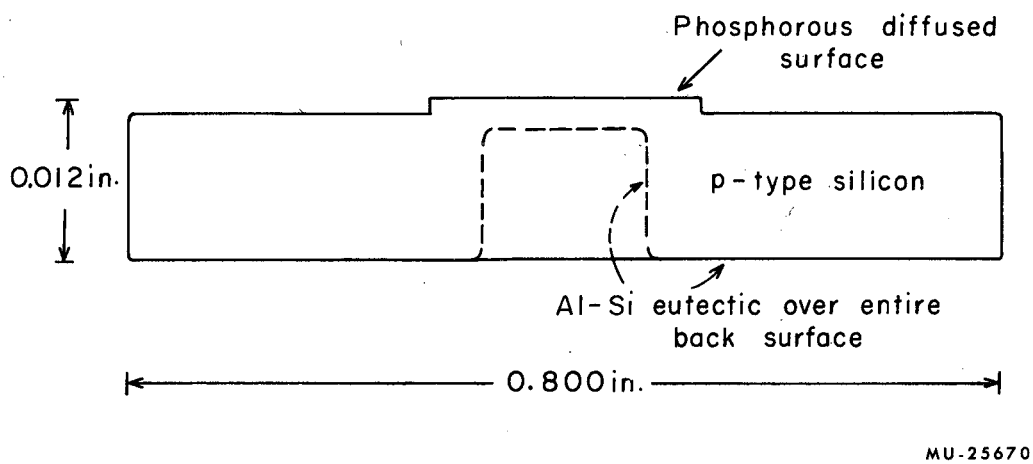


Fig. 1. Diagram of transmission counter.

## PREPARATION OF THE TRANSMISSION COUNTER

Starting with phosphorous diffused 2000 ohm-cm p-type silicon mesa-type counter 0.010 to 0.014 in. in thickness, a hole was lapped into the back side of the counter to such a depth as to leave approximately 0.001 in. more than the desired thickness in the central region.

Holes were lapped using grooved brass laps 5/32 or 7/32 in. in diameter rotated 1/32 in. off center at a rate of 120 rpm. The crystal, cemented with a wax to an optically flat glass plate, was rotated in the opposite direction at 120 rpm and lapped with 6-μ diamond compound. The lapped side was then etched in CP-4, a hydrofluoric nitric acetic acid etch, to obtain the final thickness.

To complete the counter, a 1000-A thickness of Al metal was evaporated onto the back surface and alloyed with the silicon at the eutectic temperature, 577°C. If the junction edge was damaged during the grinding operation the junction was reetched.

Thickness profiles were obtained by using a metallurgical microscope at a magnification of 500. The top surface of a glass microscope slide, on which the face of the counter rested, was used as the reference for measurement.

Figure 2 shows typical profile after etching, for the 5/32-in. lapped hole.

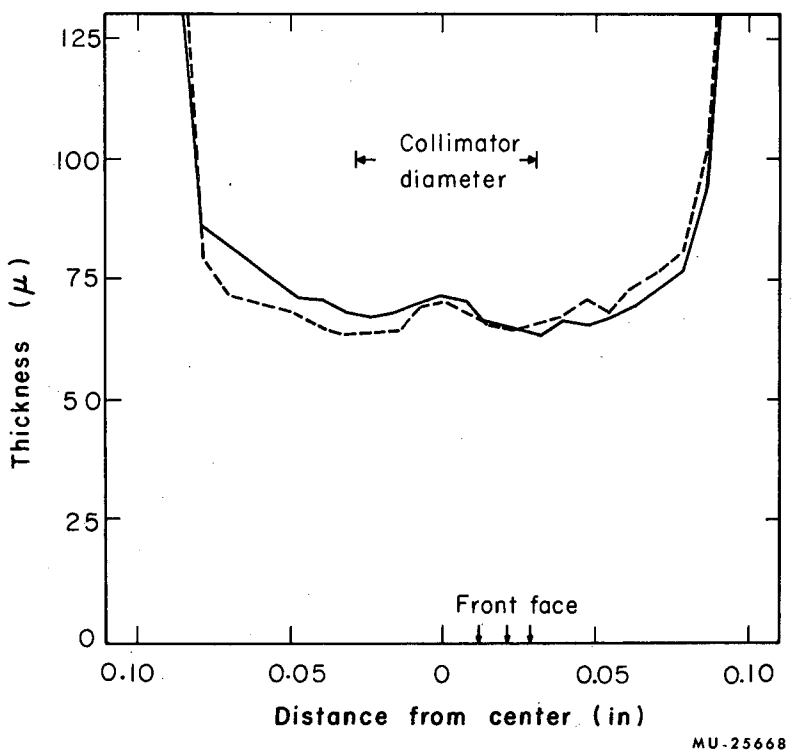


Fig. 2. Typical thickness profile after etching. Two sections at right angles are shown.

## COUNTER CHARACTERISTICS

Both Au- and Al-alloyed back contacts were tried. Counters with Au backings showed greater reverse bias currents, (Fig. 3). We did not find a decrease in the slope of the current-voltage plot at voltages higher than required to fully deplete the thin central region. Such a decrease would be expected if a large portion of the leakage current was due to charge carrier injection from the back surface.[2]

The counters were tested with 5.477-Mev $\alpha$ particles from $Am^{241}$ collimated by a 0.060-in.-diam. aperture. Pulses were observed, as expected, when the particles entered the front due to the "built in" field of the junction located at the front face. A broad peak was also observed for particles entering the back of the counter, where some of the charge was collected by diffusion. The peak height increased a relatively small amount after 5v bias, and appeared in the same channel whether particles entered the front or the back face, (Fig. 4), indicating that the depletion layer was driven all the way to the back surface of the thin section, with essentially no dead layer. The resolution of the $\alpha$ group was 35 kev (full width at half maximum).

## RESOLUTION OF THE COUNTER TELESCOPE

The following experiments were performed using the 48-Mev $\alpha$-particle beam from the Crocker 60-inch cyclotron. The counter telescope was placed in a scattering chamber at an angle of 15 deg from the beam, and viewed elastically scattered $\alpha$ particles from a 0.001-in. gold foil. The experimental apparatus has been described previously.[3]

A 0.050-in.-thick lithium drifted silicon p-i-n detector,[4] used for the E counter, resolved the $\alpha$ peak to 1.12% (FWHM) when no transmission

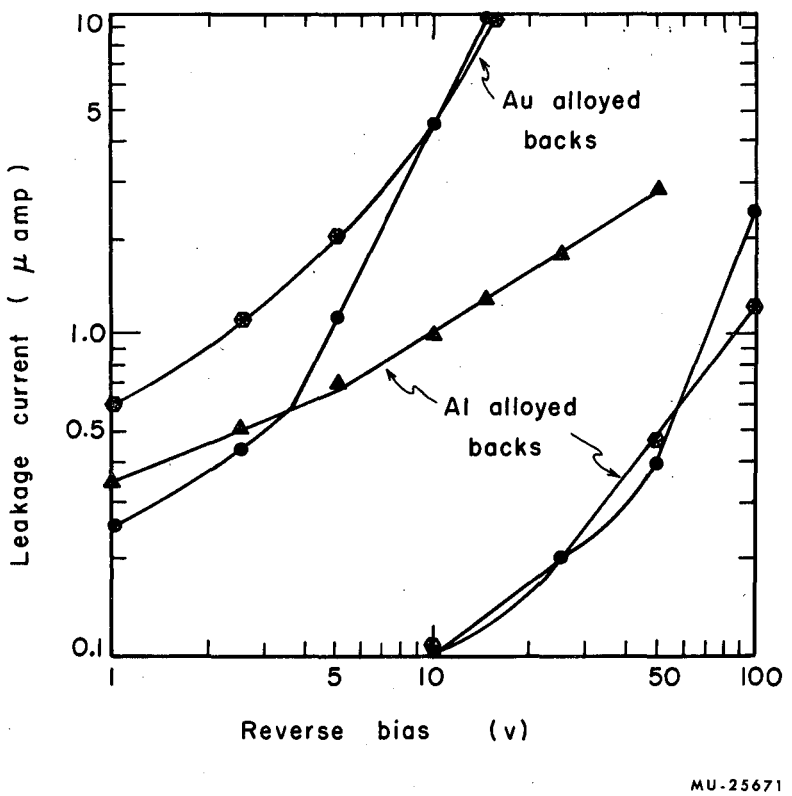


Fig. 3. Typical reverse bias currents for Al- and Au-alloyed back contacts.

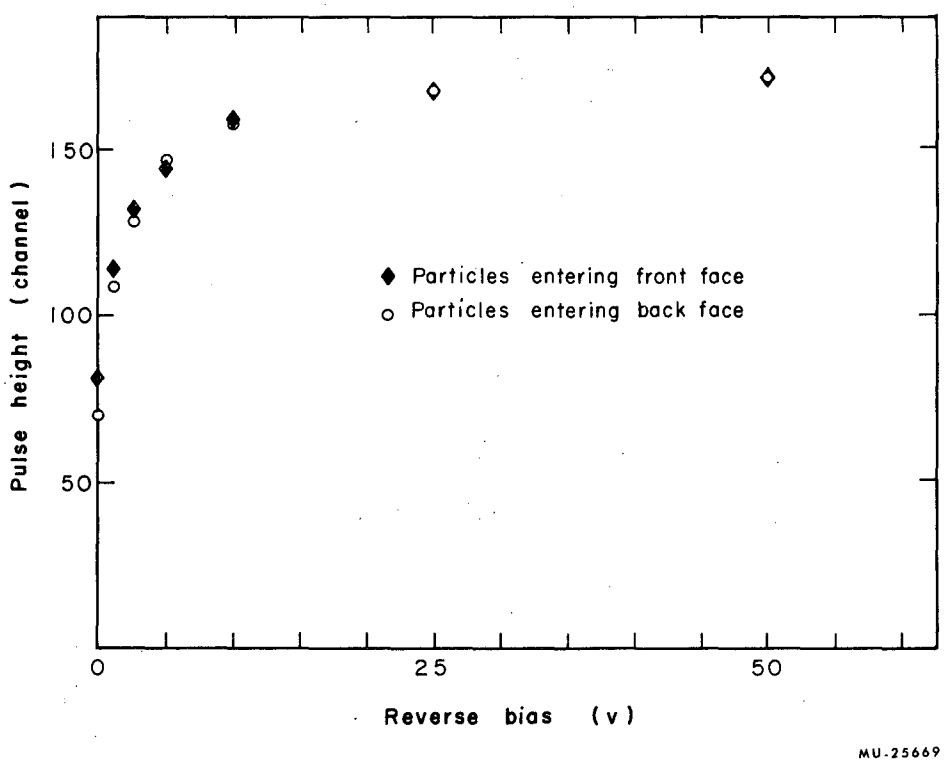


Fig. 4. Pulse height vs bias voltage.

counter was placed in front. The major part of this width is attributed to the cyclotron beam energy dispersion.

With a 0.0027-in.-thick transmission counter preceding the E counter, the resolution of the $\alpha$ peak was 1.38%.

Most of the loss in energy resolution was regained by summing the pulses from the two counters after first adjusting the ratio of the pulse heights to correspond to the ratio of the amount of energy lost in each counter. By adding the pulses, 1.19% resolution was obtained. The simple passive pulse-adder circuit is shown in the electronic block diagram, Fig. 5.

The improvement found by using the pulse adder is that expected if the resolution in the transmission counter were 16.5%. The resolution measured was generally 15%, but varied from 13 to 17%. The thickness variation alone within the 0.060-in.-diam collimated area could cause a 12% spread if equal cross section is assumed for each thickness.

The statistical fluctuation of energy loss in a uniform 0.0027-in.-thick absorber — in which the energy loss is 1.92 Mev — is 4.2% (FWHM), using the calculation of Symon.[5] This energy spread is negligible compared with the 12% spread due to nonuniformity, since combining the two spreads by taking the square root of the sum of the squares of the two yields only 12.7%.

## CONCLUDING REMARKS

Construction of thin transmission semiconductor counters as described above has resulted in quite sturdy devices.

Detectors having a more uniform thickness than the detector used in the cyclotron experiment have been achieved recently by lapping a larger diameter (1/4-in.) hole in the back face, using the 7/32-in. lap. The best results show a 0.00016-in. variation over a 0.060-in.-diam area.

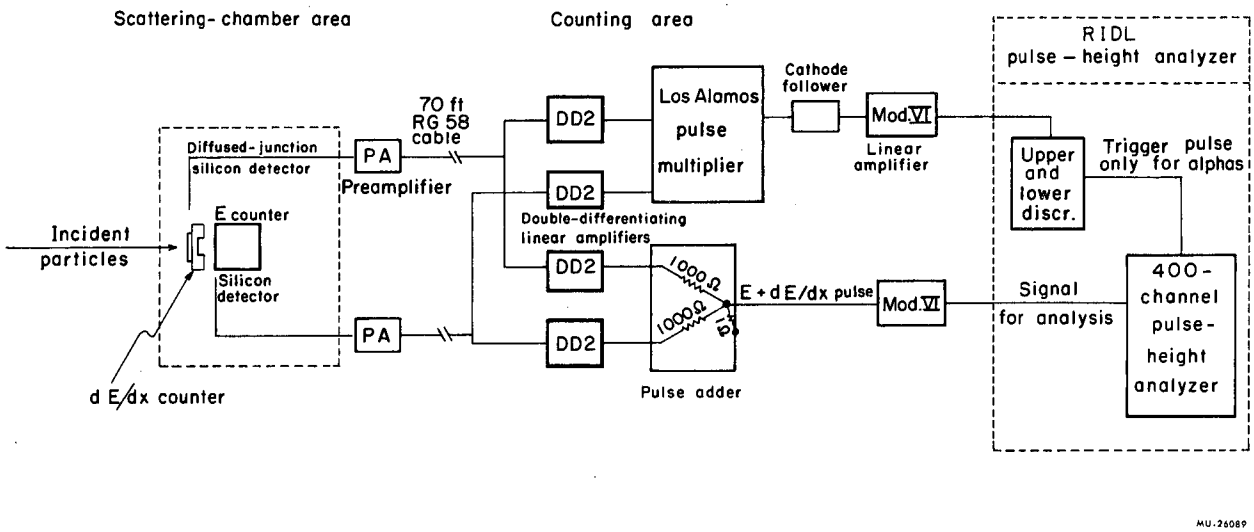


Fig. 5. The passive pulse-adder circuit, shown with complete electronics block diagram.

The use of a pulse adder to eliminate spread due to a nonuniform transmission counter has been demonstrated. Where energy straggling becomes large, even if a uniform transmission counter were used, improvement is expected in energy resolution, through pulse addition.

## ACKNOWLEDGMENTS

We are indebted to W. E. Stockton for lapping the holes in the silicon.

## FOOTNOTE AND REFERENCES

* Work done under the auspices of the U. S. Atomic Energy Commission.

1. H. E. Wegner, Semiconductor Nuclear Particle Detectors Proceedings on an Informal Conference, Asheville, North Carolina, September 1960; National Academy of Sciences, National Research Council, Nuclear Science Series Report 32 (1961) p. 74 (NAS,NRC Pub. No. 871).
2. P. T. Andrews, Thin Silicon Surface Barrier Counters, University of Liverpool Dept. of Physics report, ULDP Series (not numbered or dated) (unpublished).
3. B. G. Harvey and J. Cerny, Phys. Rev. 120, 2162 (1960).
4. J. H. Elliott, Nuclear Instr. and Methods 12,60 (1961).
5. Bruno Rossi, High-Energy Particles (Prentice-Hall, Inc., Englewood Cliffs, New Jersey) Chap. 2.

LEGAL NOTICE

This report was prepared as an account of Government sponsored work. Neither the United States, nor the Commission, nor any person acting on behalf of the Commission:

A. Makes any warranty or representation, expressed or implied, with respect to the accuracy, completeness, or usefulness of the information contained in this report, or that the use of any information, apparatus, method, or process disclosed in this report may not infringe privately owned rights; or

B. Assumes any liabilities with respect to the use of, or for damages resulting from the use of any information, apparatus, method or process disclosed in this report.

As used in the above, "person acting on behalf of the Commission" includes any employee or contractor of the commission, or employee of such contractor, to the extent that such employee or contractor of the Commission, or employee of such contractor prepares, disseminates, or provides access to, any information pursuant to his employment or contract with the Commission, or his employment with such contractor.

UCRL

# UNIVERSITY OF CALIFORNIA

## Ernest O. Lawrence Radiation Laboratory

BERKELEY, CALIFORNIA