UCRL-10080

University of California

Ernest O. Lawrence Radiation Laboratory

TWO-WEEK LOAN COPY

This is a Library Circulating Copy which may be borrowed for two weeks. For a personal retention copy, call Tech. Info. Division, Ext. 5545

Berkeley, California

DISCLAIMER

This document was prepared as an account of work sponsored by the United States Government. While this document is believed to contain correct information, neither the United States Government nor any agency thereof, nor the Regents of the University of California, nor any of their employees, makes any warranty, express or implied, or assumes any legal responsibility for the accuracy, completeness, or usefulness of any information, apparatus, product, or process disclosed, or represents that its use would not infringe privately owned rights. Reference herein to any specific commercial product, process, or service by its trade name, trademark, manufacturer, or otherwise, does not necessarily constitute or imply its endorsement, recommendation, or favoring by the United States Government or any agency thereof, or the Regents of the University of California. The views and opinions of authors expressed herein do not necessarily state or reflect those of the United States Government or any agency thereof or the Regents of the University of California.

UCRL-10080

UNIVERSITY OF CALIFORNIA

Lawrence Radiation Laboratory
Berkeley, California

Contract No. W-7405-eng-48

DESIGN AND DEVELOPMENT OF THE ION SOURCE FOR THE BERKELEY 88-INCH CYCLOTRON

Kenneth W. Ehlers

February 23, 1962

DESIGN AND DEVELOPMENT OF THE ION SOURCE FOR THE BERKELEY 88-INCH CYCLOTRON

Kenneth W. Ehlers

Lawrence Radiation Laboratory
University of California
Berkeley, California

February 23, 1962

ABSTRACT

The ion source enters the cyclotron through the upper pole tip. A large first-harmonic perturbation of the magnetic field, which would result from the presence of the entrance hole through the pole tip, has been avoided by incorporating iron within the source structure. The ion source utilizes the hot-filament Penning type of discharge, and has been designed to operate with a variety of gases, including such heavier gases as nitrogen and oxyen. By operating a test source in a mass-spectrometer arrangement, spectra of the extracted ion output have been obtained. The design and operating characteristics of the ion source are discussed.

DESIGN AND DEVELOPMENT OF THE ION SOURCE FOR THE BERKELEY 88-INCH CYCLOTRON

Kenneth W. Ehlers

Lawrence Radiation Laboratory
University of California
Berkeley, California

February 23, 1962

INTRODUCTION

In the early planning stage of the Berkeley 88-inch isochronous cyclotron, it was recognized that certain advantages could be gained by having the ion source enter the machine through the center of one of the magnet pole tips. The position usually occupied by the ion-source mounting structure and control system could thereby be removed from a normally congested area of the cyclotron, and this space in turn could be made available for probes and other devices. Perhaps the most important advantage to be realized, however, would be that the entire ion-source service area could be separated from the highly radioactive areas of the cyclotron by the inherent shielding of the pole-tip iron. Iron in excess of 4 ft in thickness would be available to protect the operator, and with the high levels of radioactivity expected with this machine, the advantage seemed well worth striving for.

The most serious disadvantage of this arrangement is that it does present mechanical difficulties. Ion-source positioning in a machine of this type must be very flexible, and pole-tip iron cannot be indiscriminately removed without seriously affecting the shape of the magnetic field. It was believed, however, that positioning of the source could be made very flexible—without perturbing the magnetic field configuration—by using a system of rotating iron cylinders with an offset center hole. This source-positioning mechnism,

which is the subject of a separate paper,[1] could accomplish the required mechanical changes without disturbing the magnetic field. However, a hole through this iron—for inserting the ion source—would still be necessary. To minimize the magnetic effect of this hole, the source structure would have to be extremely small so as to utilize a small-diameter entrance hole, or else iron would have to be included within the source structure to compensate for that removed. By including the necessary iron within the ion-source geometry, size restrictions could be removed; it was this alternative that was chosen.

SOURCE DESCRIPTION

Two cross-sectional views of the ion source now in use with the cyclotron are shown in Fig. 1. Basically, the source employs the hot-filament Penning[2] or P.I.G. type of discharge by the use of an insulated electron-reflecting cathode which charges to the filament potential. The filament (1) is cut from 0.150-in. tantalum sheet, and is attached to two water cooled "squirt" tubes (2) with zirconium screws. These tubes serve as the filament leads to carry approximately 375 amp dc, needed for initial heating of the filament. The size of the filament is dictated by the fact that the source is designed to operate with the heavier-mass gases such as nitrogen and oxygen, as well as the lighter-mass gases such as hydrogen, deuterium, and helium. The filament is quite similar to that used in the ion source of the Oak Ridge 63-inch cyclotron.[3] Electrons from the filament, which is made negative with respect to the anode, are prevented from traveling backward along magnetic field lines by an electron-shield arrangement (3) that is clamped to the water-cooled filament supports. The reflector cathode (4) is also made of tantalum, and is mounted on a ceramic insulator, which in turn is attached

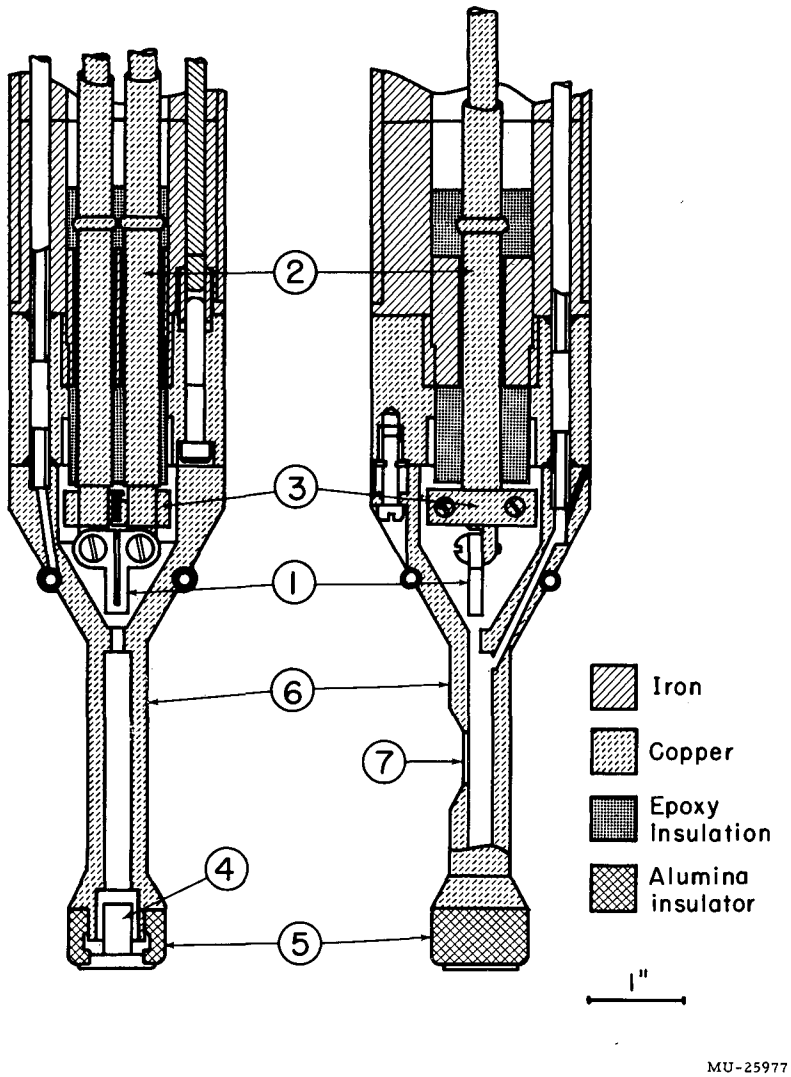

Fig. 1. Section views of ion source.
Numbered items:
1. Filament
2. Squirt tubes
3. Electron shield
4. Reflector cathode
5. Alumina insulator
6. Anode
7. Ion exit slit.

to the arc anode by means of screw threads. This alumina insulator (5), which serves to electrically isolate the reflector from the anode, is machined from AD-85,[4] a material which can operate at 1400°C. Although operations with this material to date have been satisfactory, future operations may require the use of AL-99.5,[5] a machinable ceramic which can operate at temperatures in excess of 1700°C. The reflector cathode, which becomes quite hot because of ion bombardment, is cooled only by radiation; the tantalum plate to which it is attached serves to increase the heat-radiating surface.

The anode (6) is machined from copper and is water-cooled. The arc is defined by a 0.125-in.-diameter hole drilled slightly off-center to place the arc plasma column immediately behind the ion exit slit (7). The ion exit slit as shown is 1/2-in. long by 1/32-in. wide; however, initial operations have all been conducted with a slit length of 1/4-in.

The entrance tube, on which the source is mounted, is a 10-ft length of mild steel that has been chrome-plated and ground. As can be seen in Fig. 1, additional iron has been included in an 8-in. vertical section of the tube immediately above the source structure. This iron shrinks the effective size of the iron-free hole from the 2 1/4-in. o.d. of the source entrance tube down to slightly over 1-in. The bottom section of this iron extends 0.050-in. below the actual pole-tip surface to compensate for three equally spaced holes through the iron, which are needed to bring cooling water and gas to the source anode. For ease in fabrication, the iron is constructed in sections and then assembled.

The remaining hole, through which the filament structure is brought into the source, is further reduced by a combination of iron pieces which effectively reduce the iron-free area down to the 7/16-in.-diameter holes through which the two squirt tubes pass. These two leads must be insulated

from each other as well as from the arc anode; this is done by using glass-reinforced epoxy as the insulation material (Fig. 1). Once again, the iron which immediately surrounds the filament leads is extended in toward the center of the machine to compensate for the two iron-free holes. A discussion of the design considerations and magnet checks needed to determine the required iron configuration will be a part of a separate paper.[6]

TEST ARRANGEMENT

Prior to the final design of the ion source for the 88-inch cyclotron, a short test program was undertaken, and it was instrumental in determining numerous ion-source parameters and operating characteristics. In this program the ion source was brought into the magnet gap through a hole in the pole tip of a test magnet. The same magnet was used to allow the source to be operated in a mass-spectrometer arrangement. Although it did not include the use of iron in its construction, the test source was similar in other respects to that shown in Fig. 1.

The ion source and its supporting structure and power supplies were electrically insulated from the rest of the system. Ions could be extracted and analyzed by means of an applied positive bias. A traveling Faraday cup, which could be moved along the 180-deg focal plane, was used to obtain a spectrum of the extracted ion output. The Faraday cup was moved by means of a 1/4-20 lead screw, and the cup was moved two turns per reading, which was equal to one full slit width.

Considerable difficulty was experienced in maintaining the positive extraction potential, due to the existence of an $E \times B$ discharge that is peculiar to this geometry. Initially it was impossible to maintain voltages as low as

a few kilovolts, even with the source inoperative and with system pressures as low as 2×10^{-7} mm Hg. By adding a system of trochoidal electron-sweeping electrodes, it was finally possible to maintain modest extraction potentials with the source operative. The reliable operating limit of the extraction potential was about 7 kv and thus it was not possible to obtain spectra with the source operating in the presence of high magnetic field levels.

TEST RESULTS

In an attempt to avoid water cooling of the anode, the first anodes were constructed of carbon. These anodes, however, ran visibly hot even when modest amounts of power were supplied to the discharge. This was particularly true of the region surrounding the arc-defining hole, and because of the poor thermal conductivity of the carbon, sufficient carbon was evaporated to cause rapid enlargement of this hole. Considerable carbon also appeared in the spectra of the extracted ion output. The spectrum in Fig. 2. was taken with the arc operating with deuterium gas and a carbon anode. Changing the anode material to copper greatly reduced the carbon output, but it was necessary to change the reflector material from carbon to tantalum before it was completely eliminated. Carbon was originally chosen as the reflector cathode material because of its ability to withstand the actions of sputtering. But because the heat of ion bombardment is confined by the poor thermal conductivity of carbon, carbon reflector electrodes evaporate rapidly and their life is much less than those constructed of tantalum.

When operating with the light gases such as hydrogen, deuterium, and helium, it is quite important to eliminate any background contamination by heavy ions. The presence of these heavy ions contributes greatly to the Coulomb repelling forces in the extracted ion beam. This in turn results in

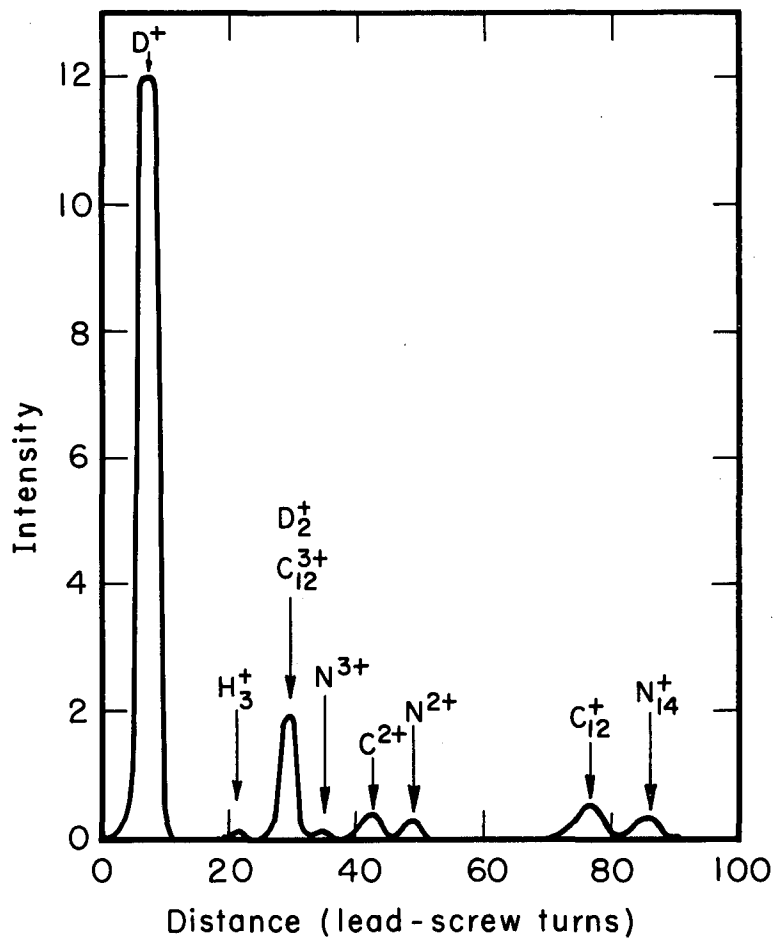

MU-25979

Fig. 2. Deuterium spectrum (carbon anode, arc 200 v at 2 amp, extraction potential 7 kv).

space-charge "blow-up" of the beam, as well as reduced numbers of the desired light ions. With one source of the carbon contaminent so near the heated filament, the life of the filament was observed to be appreciably shortened. When operating with helium gas, alpha production can be severely limited by even small traces of heavy-mass contamination, because the alphas are lost through charge exchange within the arc plasma.

The nitrogen present in the spectrum in Fig. 2 was released from the tantalum filament, since the arc had previously been operated with nitrogen gas. In Fig. 2, the abscissa represents turns of the 1/4-20 lead screw, 20 divisions being equal to 1-in. Because the ion current is a function of the exit slit area as well as the ion extraction potential, the ordinate numbers of beam intensity are relative. The integrated beam current in this case was 19 ma, of which 12% represented contaminent ions. Ninety percent of the deuterium ions present are atomic.

Figure 3 is a spectrum taken with the arc operating with nitrogen gas. In order to produce multiply charged ion states, the arc is operated with a considerably higher arc potential. Because of the heavier mass of the ions impinging at higher energy, filament wear is quite rapid. For average arc operations, it is estimated that the filament life when operating with nitrogen will be about 8 hr, whereas a filament life well in excess of 50 hr is to be expected for operations with deuterium.

When operating with nitrogen, the space-charge forces in the extracted ion beam would rapidly spread the beam in line with the magnetic field and thus make beam analysis difficult. This condition was particularly severe because of the limited extraction potentials that could be used. In many cases the unneutralized beams could be observed impinging on the top and bottom

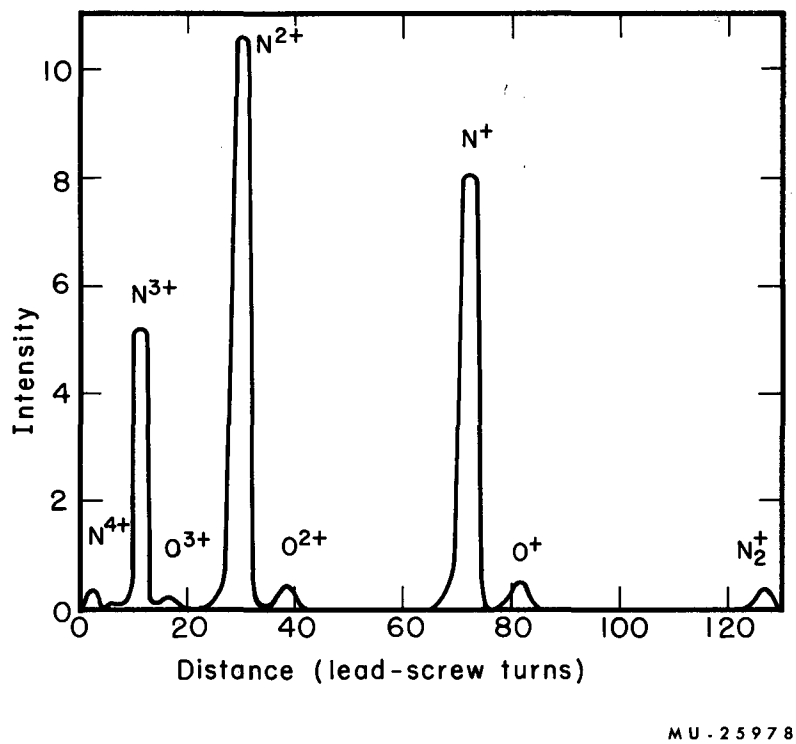

Fig. 3. Nitrogen spectrum (copper anode, arc 350 v at 1.5 amp, extraction potential 7 kv).

of the vacuum vessel by the time the beam has arrived at the 90-deg point. The beam, which had emerged from a 1/2-in.-long slit, had thus spread to a height of 6 in. by the time it had traveled forward about 8 in. It was thus necessary to supply electrons to partially neutralize these space-charge forces, before a beam analysis could be made. This was done by placing normal to the magnetic field, an aluminum plate, which defined the upper edge of the ion beam and from which electrons were produced by ion bombardment.[7]

Of the total nitrogen-ion current present in Fig. 3, 36% is atomic, 45% is N^{2+}, and 17% (0.6 ma) is N^{3+}.

The oxygen present in the spectrum is believed to have originated from the use of impure nitrogen gas, or perhaps from an inadequately evacuated regulator in the gas feed system. The various charge states of oxygen are present in roughly the same proportions as those of nitrogen.

This spectrum (Fig. 3) was taken with the source equipped with a copper anode and a tantalum reflector cathode. As can be seen, all traces of carbon have been eliminated.

Figure 4 is a photograph of the ion source, located in operating position in the cyclotron. As shown, the source has been rotated 10-deg from a line parallel to the dee edge. This adjustment is one that can be made very easily with this manner of source entrance.

CONCLUSION

Cyclotron operations will require the ion source to operate with a variety of particles, and with various combinations of magnetic field and dee potential. Thus considerable operating experience will be required to fully determine the ion-source operating characteristics and effectiveness.

---

* This work was done under the auspices of the U. S. Atomic Energy Commission.

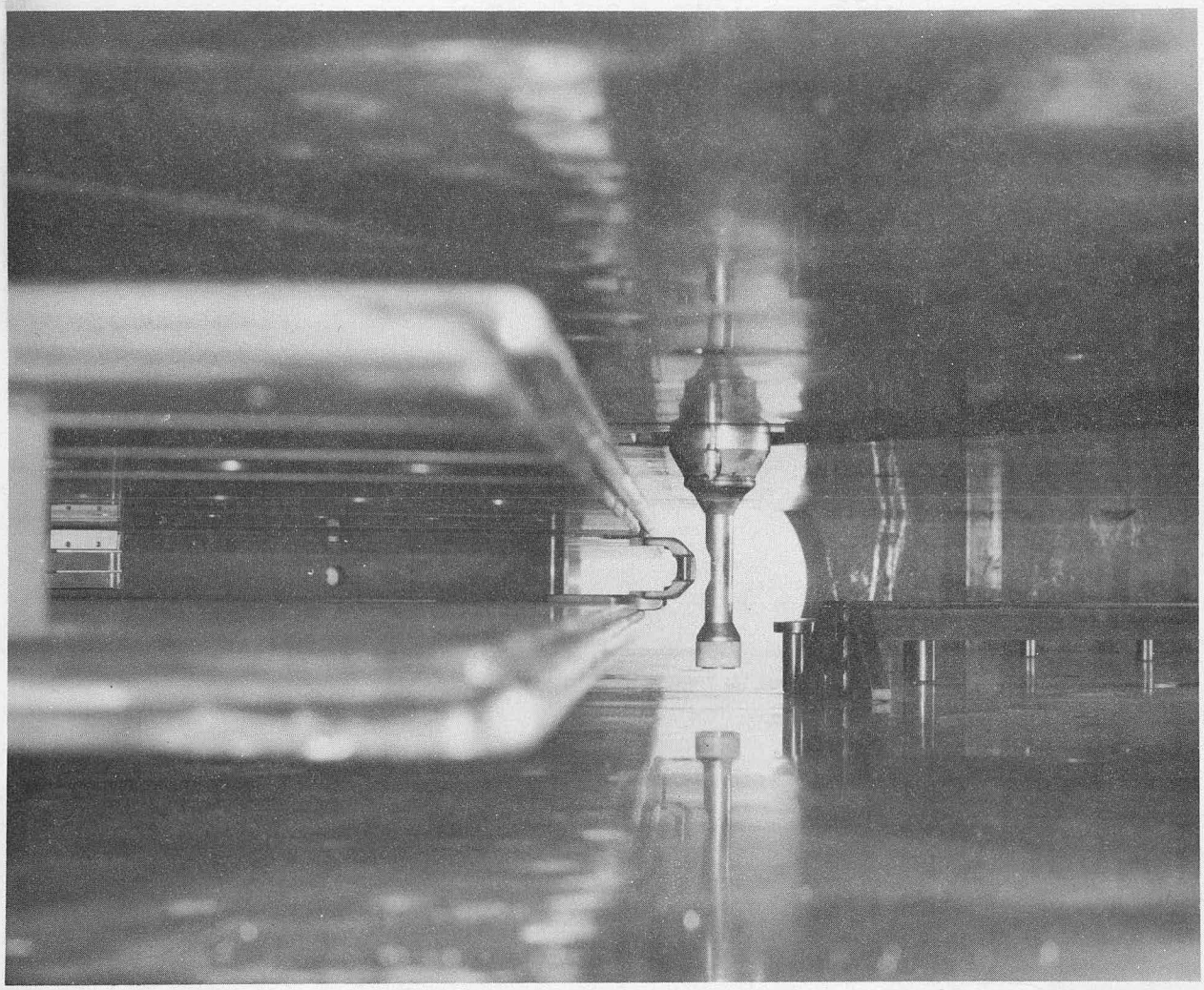

ZN-3034

Fig. 4. Ion source in operating position.

FOOTNOTES AND REFERENCES

1. J. M. Haughian and R. M. Burleigh, Lawrence Radiation Laboratory Report UCRL-10068 (1962).

2. F. M. Penning, Physica 4, 71 (1937).

3. H. Reynolds and A. Zucker, Rev. Sci. Instr. 26, 894 (1955).

4. Material manufactured by Coors Porcelain Co., Golden, Colorado.

5. Material manufactured by Western Gold and Platinum Co., Belmont, California.

6. P. G. Watson, Lawrence Radiation Laboratory Report UCRL-10072 (1962).

7. C. E. Anderson and K. W. Ehlers, Rev. Sci, Instr. 27, 809 (1956).

This report was prepared as an account of Government sponsored work. Neither the United States, nor the Commission, nor any person acting on behalf of the Commission:

A. Makes any warranty or representation, expressed or implied, with respect to the accuracy, completeness, or usefulness of the information contained in this report, or that the use of any information, apparatus, method, or process disclosed in this report may not infringe privately owned rights; or

B. Assumes any liabilities with respect to the use of, or for damages resulting from the use of any information, apparatus, method, or process disclosed in this report.

As used in the above, "person acting on behalf of the Commission" includes any employee or contractor of the Commission, or employee of such contractor, to the extent that such employee or contractor of the Commission, or employee of such contractor prepares, disseminates, or provides access to, any information pursuant to his employment or contract with the Commission, or his employment with such contractor.