RECEIVED
LAWRENCE
RADIATION LABORATORY
JUL 22 1971
LIBRARY AND
DOCUMENTS SECTION

UCRL-10131

c.2

University of California

Ernest O. Lawrence Radiation Laboratory

TWO-WEEK LOAN COPY

This is a Library Circulating Copy which may be borrowed for two weeks. For a personal retention copy, call Tech. Info. Division, Ext. 5545

Berkeley, California

UCRL-10131 c2

UCRL-10131

UNIVERSITY OF CALIFORNIA
Lawrence Radiation Laboratory
Berkeley, California

Contract No. W-7405-eng-48

NOTE ON TRANSISTORS FOR AVALANCHE-MODE OPERATION

Harold W. Miller and Quentin A. Kerns

March 26, 1962

Note on Transistors for Avalanche-Mode Operation*

Harold W. Miller and Quentin A. Kerns

Lawrence Radiation Laboratory
University of California
Berkeley, California

March 26, 1962

We have found that selected Motorola transistors of the MM-486, MM-487, and MM-488 type are quite useful for avalanche-mode operation. Figure 1 shows a circuit used in conjunction with a traveling-wave oscilloscope for selecting avalanche units. The output of the line-type pulse generator is 40 to 60 volts (either polarity of output pulse is available), and the rise time is less than 0.5 nsec. Figure 2 shows a plot of the static V-I characteristics of the collector-to-emitter junction for various units, avalanching and nonavalanching. A transistor that avalanches will do so over the entire flat portion of the V-I characteristic.

One can expect that 10 to 30% of the transistors will avalanche. There is some indication that the low-beta type (MM-486) give the best yield.

There is a time delay of a few nanoseconds between application of a trigger pulse and the rise of the main avalanche current. Figures 3 and 4 shows this delay, measured between the 50% point of the trigger-voltage waveform and the 50% point of the avalanche output waveform, as a function of trigger-voltage amplitude (Fig. 3) and static-collector current (Fig. 4).

The negative-resistance region (such as that in Fig. 2) should be avoided if time and amplitude jitter of the output pulse are to be minimized.

A temperature change from 70 to 150°F has negligible effect on time delay, but raises the breakdown knee (Fig. 2) to higher current (e.g., from 2×10^{-3} to 8×10^{-3} μa).

*This work was done under the auspices of the U.S. Atomic Energy Commission.

FIGURE LEGENDS

Fig. 1. Avalanche test circuit. The circuit is triggered by a positive 2-nsec pulse from the mercury-switch pulser. Transformer T_1 is a 2:2 winding on a Ferroxcube 208 F125-3C core. A low-capacitance vacuum-tube voltmeter is used to measure the collector-to-emitter voltage V_{CE}, and is removed before the pulse test.

Fig. 2. Direct-current V-I characteristics. Breakdown of nonavalanching and avalanching transistors is compared for a zero base-to-emitter junction at 25°C.

Fig. 3. Avalanche firing delay time as a function of the base-to-emitter trigger voltage at 25°C. The unit ceases to fire below 0.96 volts for I_c = 10μa, and below 0.8 volts for I_c = 200 μa.

Fig. 4. Avalanche firing delay time as a function of the dc collector current (for a typical avalanche unit) at 25°C. The unit was turned on with a base drive voltage of 2.5-v amplitude and 4-nsec pulse width.

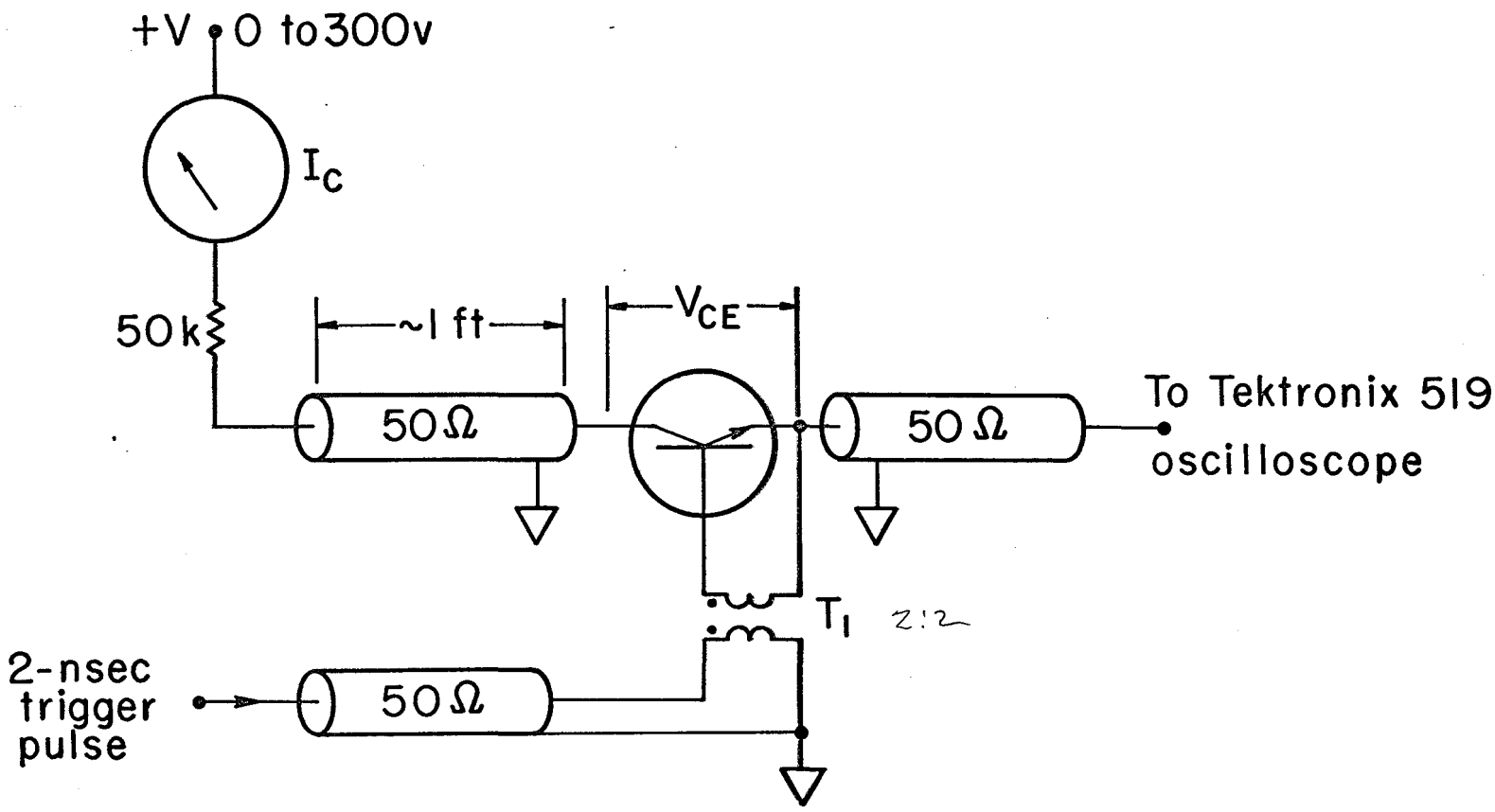

Fig. 1

MU-26296

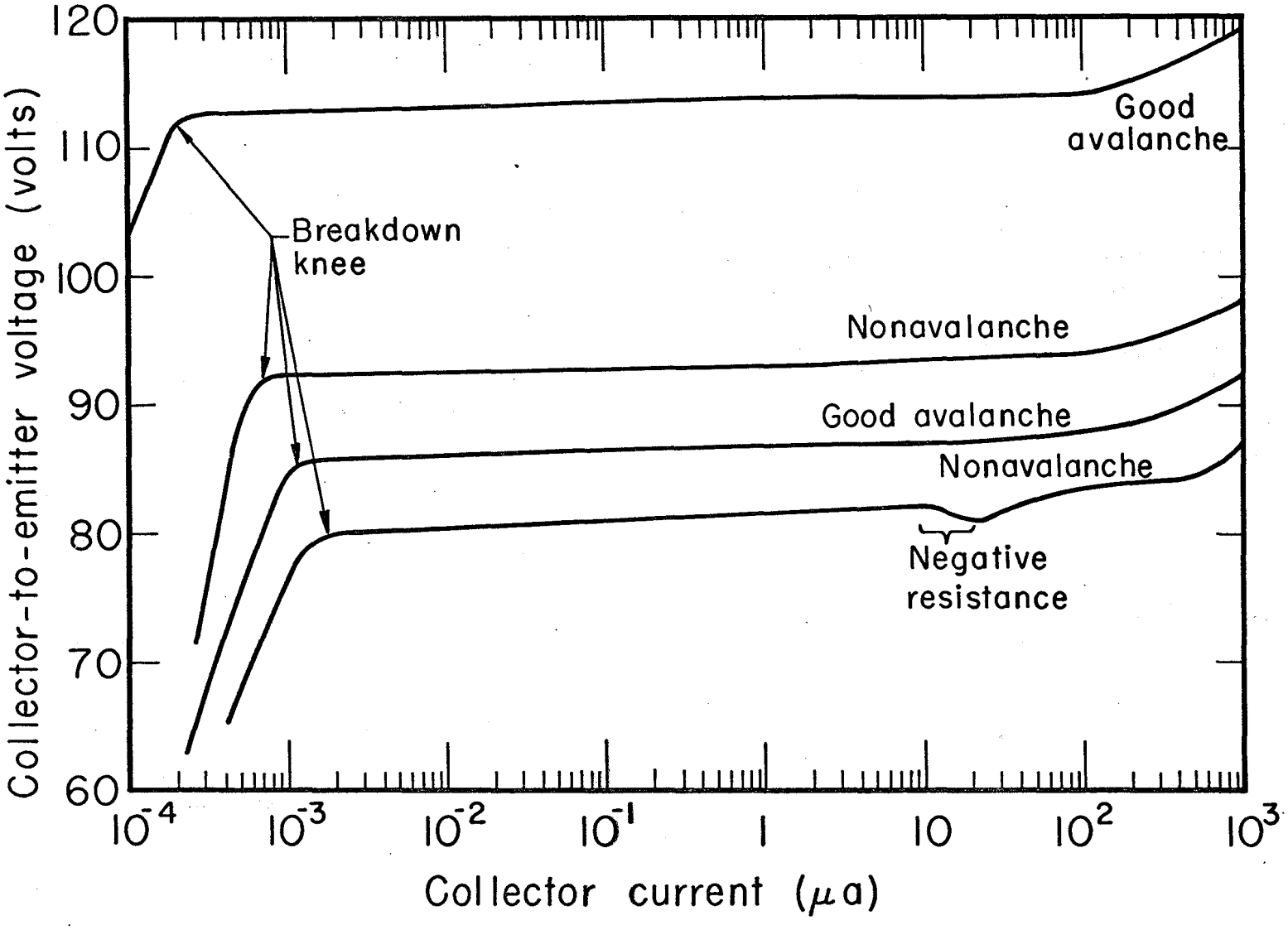

Fig. 2.

MU-26297

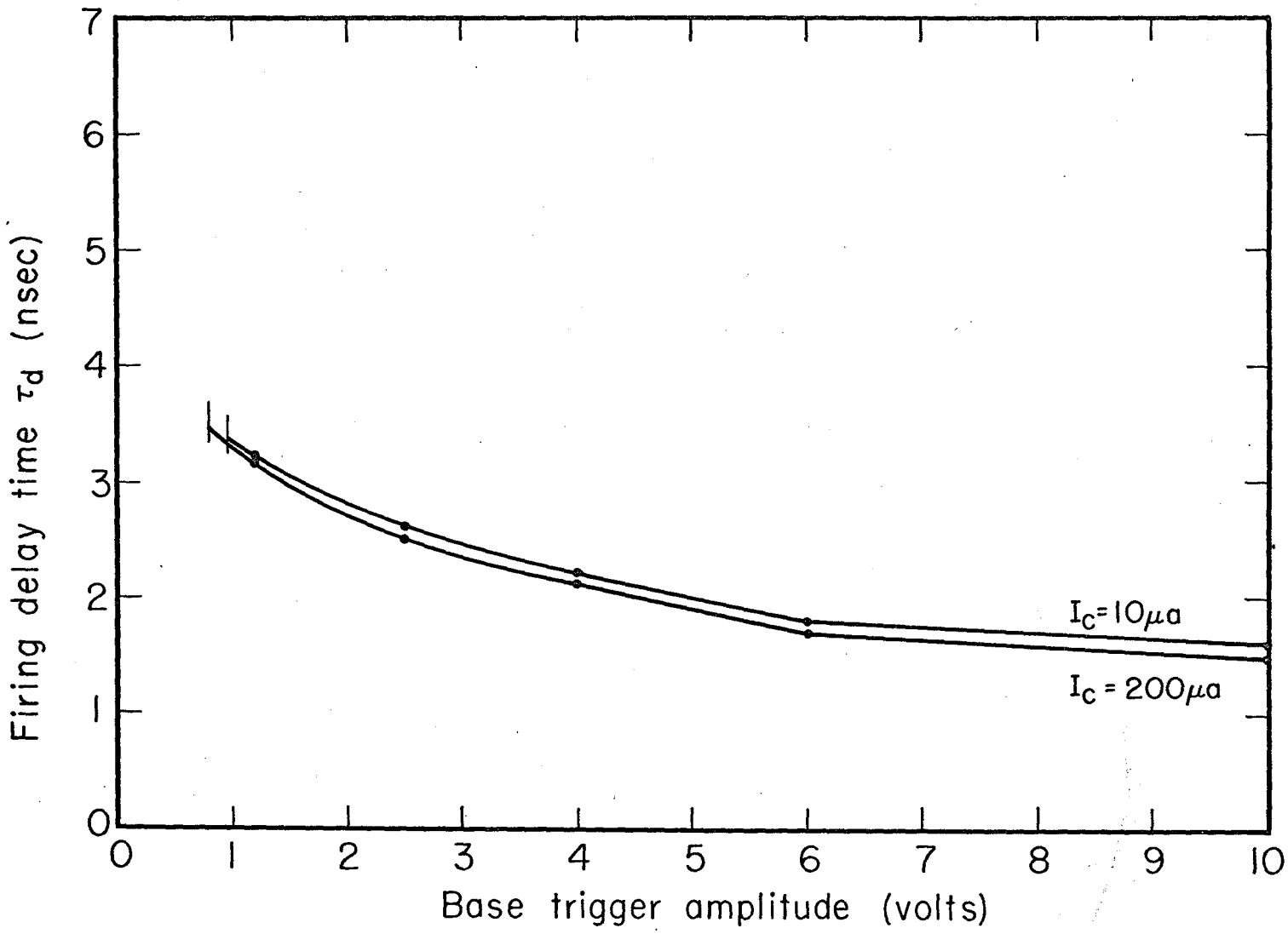

Fig. 3.

MU-26298

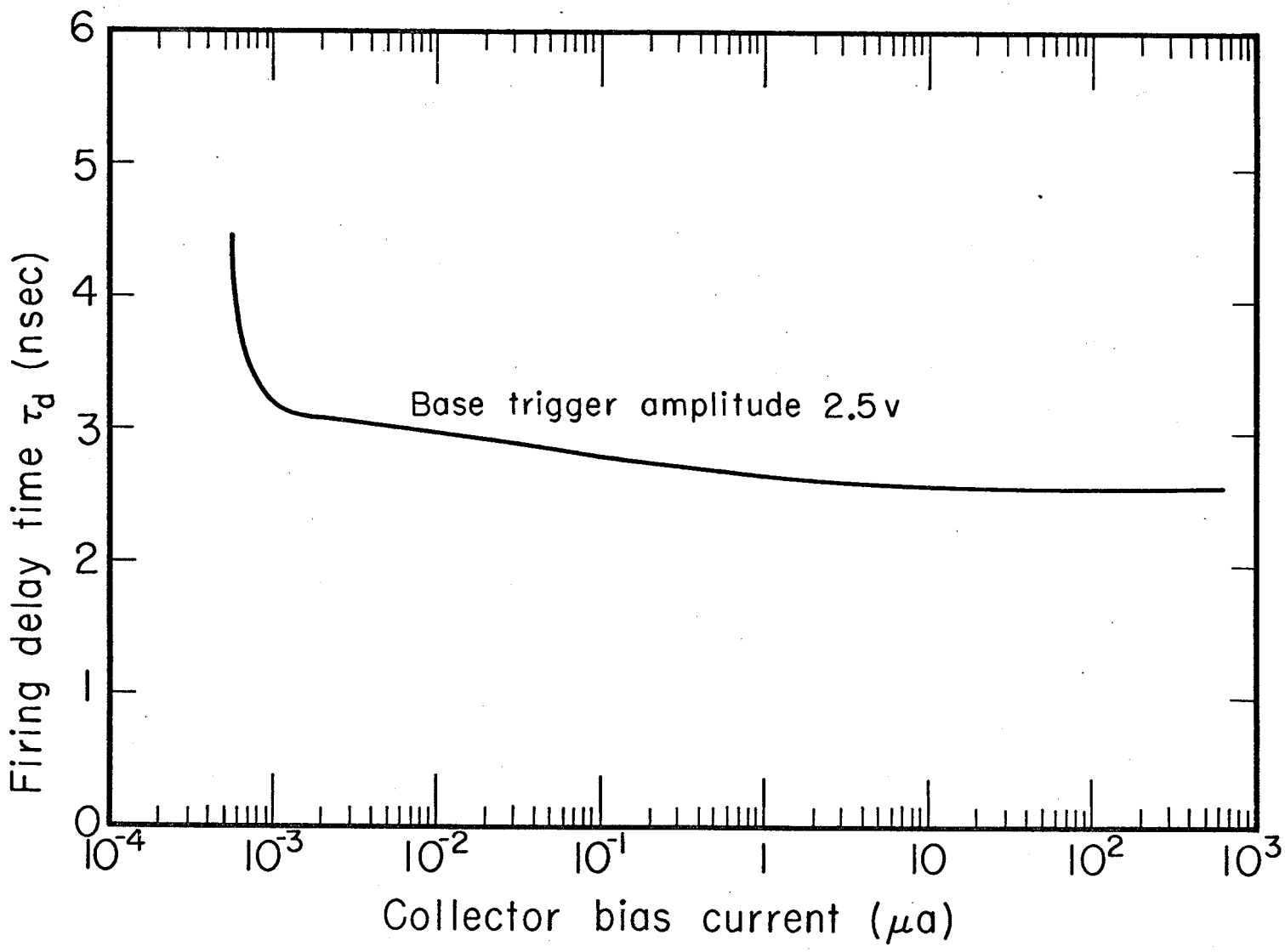

Fig. 4.

MU-26295