UCRL-10206

University of California
Ernest O. Lawrence Radiation Laboratory

PLASMA GUN ASPECTS OF AN E x B SYSTEM

TWO-WEEK LOAN COPY

This is a Library Circulating Copy which may be borrowed for two weeks. For a personal retention copy, call Tech. Info. Division, Ext. 5545

DISCLAIMER

This document was prepared as an account of work sponsored by the United States Government. While this document is believed to contain correct information, neither the United States Government nor any agency thereof, nor the Regents of the University of California, nor any of their employees, makes any warranty, express or implied, or assumes any legal responsibility for the accuracy, completeness, or usefulness of any information, apparatus, product, or process disclosed, or represents that its use would not infringe privately owned rights. Reference herein to any specific commercial product, process, or service by its trade name, trademark, manufacturer, or otherwise, does not necessarily constitute or imply its endorsement, recommendation, or favoring by the United States Government or any agency thereof, or the Regents of the University of California. The views and opinions of authors expressed herein do not necessarily state or reflect those of the United States Government or any agency thereof or the Regents of the University of California.

For meeting - Case Inst. of Tech, Cleveland Sept. 6-7, 1962

UCRL-10206
Revised

UNIVERSITY OF CALIFORNIA

Lawrence Radiation Laboratory
Berkeley, California

AEC Constract No. W-7405-eng-48

PLASMA GUN ASPECTS OF AN E x B SYSTEM

Klaus Halbach and William R. Baker

December 9, 1963

PLASMA GUN ASPECTS OF AN E x B SYSTEM*

Klaus Halbach and William R. Baker

Lawrence Radiation Laboratory
University of California
Berkeley, California

December 9, 1963

ABSTRACT

Experiments are reviewed that were performed with the Homopolar V device, an apparatus consisting of a coaxial electrode system with neutral gas injection in the middle plane that is immersed in a longitudinal magnetic field. The discussion of these experiments leads to the conclusion that the Homopolar V device produces a deuterium plasma with a kinetic temperature in the kilo-electron-volt range at a density of the order of 10^{14} ions/cm^3. Since such a plasma is very desirable for injection purposes, the basic consideration concerning the design and operation of a modified Homopolar V device, the Homopolar Gun I, are discussed.

INTRODUCTION

During the last six years, considerable efforts have been made to increase the ion energy in rotating-plasma devices.[1] This led, in this Laboratory, to the construction and operation of the Homopolar V device. We have been able to produce in this apparatus a deuterium plasma with a kinetic ion temperature in the keV range at densities of 10^{14} to 10^{15} cm^{-3},[2] with these limitations set not by fundamental processes but by the size of the capacitor banks available to us. Although these energies are considerably lower than the energy of the ions obtained from a Marshall gun,[3] the energy of the ions produced in a rotating-plasma device is transverse energy and therefore more desirable for most experiments, like injection into a mirror geometry. Since the plasma produced by Homopolar V

seems also to be very clean and the Homopolar V geometry requires only minor modifications to obtain a device that can be operated as a gun, we will operate in the near future such a "Homopolar Gun". Before we discuss the design of this device, we will review in the first part of this paper the characteristics of Homopolar V and the plasma produced by it. In this discussion we do not go into experimental details but put the emphasis on the basic ideas that lead, together with the experimental results, to the above-mentioned conclusions about the Homopolar V plasma.

HOMOPOLAR V

A diagram representing the Homopolar V device is given in Fig. 1. To produce a plasma in this apparatus the following sequence of events takes place: After a base pressure of less than 2×10^{-7} mm Hg has been obtained and the two 1-μF capacitors have been charged up to typically 30 kV, the magnetic field coils are energized. When the magnetic field has, in about 6 msec, risen to a value of about 25 kG in the midplane, a fast acting valve releases typically 50 μl D_2 from the center electrode in the midplane. About 100 μsec later, a discharge takes place. Since in this discharge a radial current passes in a longitudinal magnetic field, one expects that the created plasma is rotating with a rotational or drift velocity $v = E/B$, which in general depends on r.

The simplest way to verify experimentally the rotation of the plasma is to perform a crowbar experiment by closing the two switches parallel to the 1-μF capacitors. Voltage and current traces, showing both the initial discharge current and the crowbar current, are reproduced in Fig. 2. It should be noted that the current is roughly two orders of magnitude smaller than in a Marshall gun. The decrease of the voltage immediately after the initial discharge is a continuation of the ringing caused by

the initial discharge and should not be confused with the following drop of the voltage to zero because of the application of the crowbar. The very small current after the initial discharge with practically the full initial voltage still across the device, and particularly the fact that the crowbar current and the initial discharge current flow in opposite directions, indicate that the plasma is indeed rotating. This can be seen more quantitatively by calculating the angular momentum imparted to the plasma by the current passing between the two electrodes: If we assume azimuthal symmetry and introduce the current density $\underset{\sim}{j}$, the uniform axial magnetic field $\underset{\sim}{B}$ and the coordinates r and z of a volume element with respect to the center of the device, the angular momentum $\underset{\sim}{P}$ imparted to the plasma is in very good approximation given by

$$\underset{\sim}{P} = \int \underset{\sim}{r} \times (\underset{\sim}{j} \times \underset{\sim}{B}) \cdot 2\pi r \, dr \, dz \, dt.$$

$\underset{\sim}{P}$ has only a z component P, given by

$$P = B \int j_r \cdot 2\pi r \, dz \, dt \, r \, dr.$$

If we introduce the total charge Q that passes through the device and the radii r_1 and r_2 of the inner and outer electrode, we obtain, after the integrations have been carried out in the indicated order,

$$P = QB \cdot \frac{r_2^2 - r_1^2}{2}. \tag{1}$$

Experimentally it is found that the charges passing through the device during the initial discharge and the application of the crowbar are approximately equal in size but have opposite signs, as can be seen from Fig. 2. Quantitative evaluation of such experiments with the help of Eq. (1) yield the result that typically 80% of the angular momentum

imparted to the plasma during the initial discharge can be recovered by crowbarring. Since the unrecoverable angular momentum of the Larmor motion is usually much less than 10% of the total angular momentum, this indicates that about 20% of the initial angular momentum is lost to the walls.

Since, as we will see farther below in detail, the current in the Homopolar V device is nearly entirely carried by the ions, one would expect to find a large fraction of the applied voltage across a thin anode sheath, thus leading to very small rotational velocities in the main plasma body. To obtain an upper limit of the sheath voltage, we derive now an expression for the drift-velocity distribution in the device. To do so we assume that no significant radial angular momentum exchange takes place during and immediately after the main discharge. This seems to be a reasonable assumption, since the ion-ion collision time is very long compared with the discharge time. Then, the angular momentum of the plasma within a thin cylinder shell equals the angular momentum deposited there by the current. According to the derivation of Eq. (1), the latter quantity is given by

$$dP = QB\, r\, dr. \tag{2}$$

whereas the former quantity can be expressed as

$$dP = \int_z v(r)\, r\, \rho(r, z)\, 2\pi r\, dr\, dz. \tag{3a}$$

In Eq. (3a) the drift velocity v is assumed to be only a function of r, because $v = E/B$ and magnetic field lines can be assumed to be equipotentials because of the high conductivity of the plasma along magnetic field lines. The density ρ is of course a function of both r and z because of

the neutral gas injection into the evacuated device. If we introduce the quantity g through

$$g(r) = 2\pi r \int \rho(r, z)dz, \tag{4}$$

Eq. (3a) can be rewritten as

$$dP = vg\, r\, dr. \tag{3b}$$

From Eqs. (2) and (3b) it follows that $v = QB/g$. Replacing v by E/B, we obtain, for the electric field E and the voltage V across the device

$$E = QB^2/g, \tag{5}$$

$$V = QB^2 \int_{r_1}^{r_2} \frac{dr}{g(r)} . \tag{6}$$

It should be noted that this equation can be used to define the hydromagnetic capacity[4] of the rotating-plasma device.

We consider Eq. (6) now at the time immediately after the main discharge. At that time we know Q and B and furthermore the total mass M of the plasma, which, according to Eq. (4), can be expressed as

$$M = \int_{r_1}^{r_2} g(r)dr.$$

A simple calculation shows that for a fixed value of M the integral in Eq. (6) cannot be smaller than $(r_2 - r_1)^2/M$. (This smallest value is obtained for $g(r) = \text{const}$, which leads, according to Eq. (5), to a uniform

electric field.) Using this, we can therefore write

$$V > \frac{QB^2}{M} (r_2 - r_1)^2. \tag{7}$$

If a sheath exists, the voltage drop across it therefore cannot be larger than the difference between the actual voltage across the device and the right side of inequality (7). Experimentally we found that this difference amounts to not more than about 20% of the voltage across the device. This leads to the conclusion that if an anode sheath exists at all, it is certainly not a dominating effect. This is not too surprising in view of a theoretical study of the stability of an electron sheath.[5] Applying this theory to our experiment, we can expect the anode sheath to be unstable if the density at the anode is so high that the plasma frequency exceeds the electron cyclotron frequency, a condition which is always satisfied in our experiments. These considerations allow us to conclude that the drift velocities in this device are of the order $v \approx V/B(r_2 - r_1)$, where V is the voltage across the device after the initial discharge. For our experiments this leads to velocities of the order 3×10^5 m/sec, corresponding to ion energies in the keV range. These ion energies are about 100 times as large as the ion energies achieved in previous devices. We contribute this to the neutral gas injection, allowing creation of a plasma that is not in contact with the insulators.

If the aim of an experiment is the creation of a hot plasma, drift energies are not too significant by themselves, since they represent the energy of organized motion. The importance of the drift energy in our experiment becomes clear when we realize that the ions are produced in

crossed electric and magnetic fields and should therefore have the same amount of energy in Larmor motion.

To see this, we consider for simplicity the creation of ions in plane geometry with mutually perpendicular uniform electric and magnetic fields. When an atom, assumed to be at rest before ionization, becomes ionized, it will move on a cycloid. The significance of this motion is, however, much easier to understand if we go into a coordinate system that moves with the velocity $\underset{\sim}{E} \times \underset{\sim}{B}/B^2$ with respect to the laboratory system. In this system the electric field is zero and an atom moves, before ionization, with a velocity $-\underset{\sim}{E} \times \underset{\sim}{B}/B^2$. Upon ionization, it will move with the velocity $|\underset{\sim}{E} \times \underset{\sim}{B}/E^2| = E/B$ on a Larmor circle, and the electron will move on its Larmor circle with the same velocity. From this consideration we can draw the following conclusions: (a) Averaged over time, neither the ions nor the electrons have net momentum, i.e., we are in the drift frame. (b) Both ions and electrons are, on the average, displaced by their Larmor radius from their original position. This displacement constitutes a current, and since the ions have a much larger Larmor radius than the electrons, the current is mainly carried by the ions. (c) Contaminants will have, after ionization, a Larmor radius still larger than the Larmor radius of the deuterons. This ultimately can lead to a loss of the contaminants to the walls and therefore a very clean plasma. (d) If, as in our experiments, the ions are produced over a time long compared with their Larmor period, there exists no phase correlation between their Larmor motions, i.e., the Larmor motions are automatically randomized and the Larmor energy can be used to define a kinetic temperature.

It should be noted that all changes of the electric field after ionization of an atom do not change its Larmor energy provided these

changes are slow compared with the Larmor period. Since this holds true for all changes of the applied electric field in our experiment, including the application of the crowbar, each ion can be expected to have a Larmor velocity equal to the value of E/B at the time of ionization, modified only by ion-ion and ion-electron collisions.

Although it is conceivable in principle that during the main discharge ionization occurs predominantly in regions of temporarily low electric fields, this is not very likely. Since the energy of the ions in organized rotation is in the keV range, we can expect the kinetic temperature to be of the same order of magnitude. To verify this experimentally we measured the total neutron production with a LiI scintillator and found that the neutron production increased with the applied voltage as expected. Although preliminary measurements with a plastic scintillator gave the result that neutrons are still produced after the voltage across the device had been removed by crowbarring, these measurements are not yet good enough to determine the decay time of the plasma.

To make more direct velocity measurements we used two neutral detectors in a time-of-flight arrangement so that we could determine the velocity with which energetic charge-exchange neutrals left the device. Since the unknown density distribution determines the electric field distribution [Eq. (5)] and therefore the velocity of the ions at the outer electrode, these measurements do not allow us to determine whether the maximum ion velocity at the outer electrode is $E(r_2)/B$ or $2E(r_2)/B$.[6] The measured velocities were, however, of the expected order of magnitude, namely $2E(r_2)/B$ if the gas density is assumed to be radially uniform ($g \propto r$). One aspect of the neutral particle measurements does support

the concept of a high kinetic ion temperature in an indirect way: The flux of neutrals decreased by several orders of magnitude to an immeasurably low value shortly before the main discharge current went to zero, indicating that the plasma was completely ionized at that time. The virtual disappearance of deuterium and impurity lines in the visible at the same time confirmed this conclusion. Since the electron temperature has to be very low originally, there has to be a heating mechanism to raise the electron temperature. Assuming an ion temperature in the keV range, the energy transfer from the ions to the electrons is sufficiently fast to give an electron temperature of 50 eV in about 1 μsec, thus fitting the experimental findings very well.

Although there is obviously much more diagnostic work to do to obtain a more complete knowledge of the plasma produced by the Homopolar V device, we feel that the reported results are encouraging enough to build a gun based on the same principles.

HOMOPOLAR GUN I

From the discussion of the Homopolar V device it is evident that only minor modifications of that design are necessary to obtain a plasma gun that has very desirable properties for at least some experiments. In the following we discuss our Homopolar Gun I and basic considerations concerning the design and operation of such a device.

A schematic representation of Homopolar Gun I is given in Fig. 3. The center electrode extends into the device from only one end to allow an unobstructed ejection of the plasma at the other end. The mirror coil at the ejection end of the device has been retained. This allows pre-

liminary experiments in the Homopolar V mode to determine whether the asymmetric center electrode requires also some other modifications. One addition to the design shown in Fig. 3 that we expect to be necessary is a short extension of the central electrode beyond the gas ports to avoid a direct axial acceleration of charged particles by the axial component of the electric field at the end of the electrode.

When Homopolar Gun I is operated as an injection device, the mirror at the ejection end will of course be disconnected to allow the plasma to leave the gun. We intend to study the plasma properties at first and may use that plasma later to perform some experiments, such as adiabatic compression studies.

The gun will of course be operated in the same way the Homopolar V device is operated. We therefore expect to see a main discharge that is equivalent to the main discharge in Homopolar V. Immediately following this discharge, we will apply the external crowbar. There are two reasons for this procedure: (a) For most experiments it will be preferable to have a nonrotating plasma instead of a rotating plasma. (b) In our experiments with Homopolar V we found that (depending on the magnetic field configuration) between 5 and 20 μsec after the main discharge the fast capacitors discharge suddenly through the device. This "internal crowbar" is accompanied by the release of large amounts of gas from the electrodes of the device. Although it would be desirable to fully understand this behavior, we feel that it is much more important that we can prevent this unwanted discharge by crowbarring early enough.

As in Homopolar V, we intend to work with sufficiently high densities to prevent the formation of the anode sheath. We also intend to avoid,

at least at first, excessive magnetic field distortions because of centrifugal forces and kinetic temperature. If we allow a magnetic field distortion of not more than 10% and want to fulfill the instability conditions of the anode sheath, we have to satisfy the inequalities

$$10^{13} < \frac{n}{B^2} < \frac{25 \times 10^{13}}{T},$$

where n is the density in cm^{-3}, B the magnetic field in Wb m^{-2} (10 kG), and T the kinetic ion temperature in keV.

It should be pointed out that these conditions should not be considered as very "hard" conditions. The condition for the instability of the anode sheath is a sufficient condition for instability, but it is not known whether it is also a necessary condition for sheath instability. This condition and the one resulting from the consideration of magnetic field distortion simply describe a regime of parameters for which we can expect with near certainty a satisfactory performance of the gun. At the same time one has of course also to make sure that the Larmor radii of the ions are not too large a fraction of the spacing between the electrodes.

For most experiments it will be desirable to transfer the plasma from the valve region to the experimental region in a time shorter than the ion-ion collision time, which is of the order of 50 μsec for a deuterium plasma with 1 keV kinetic temperature at a density of 10^{15} cm^{-3}. Although the azimuthal magnetic field associated with the discharge current will impart some axial momentum to the plasma, this in general will not be nearly enough to obtain the desired transfer time. We therefore plan to have a mirror field behind the valve region with the valve region

itself located at the mirror slope. We intend to make the magnetic field in the valve region about 10% higher than in the long drift region, thus transforming 10% of the transverse energy into axial energy. With a deuterium plasma having a transverse Larmor energy of the ions in the keV range, this should give axial velocities of the order of 10^5 m/sec, which will be fast enough to obtain reasonable transfer times for most experiments. Another alternative would be to use an initially uniform magnetic field and then to pulse on a transfer coil at the proper time and location to provide an additional fast-rising mirror field.

To minimize the influx of contaminants from the outer wall after the crowbar has been applied, we plan to reduce later the diameter of the outer electrode in the valve region by about 20% so that the plasma has no contact with the walls after it has left the valve region.

One could also imagine the use of plasma electrodes; however, it would be premature to discuss these future projects in detail before it has been shown experimentally that the Homopolar Gun works as expected and requires improvements of that nature.

ACKNOWLEDGMENTS

We would like to thank Dr. Harold P. Furth and Dr. Wulf B. Kunkel for many helpful discussions during the entire history of this program, Messrs. Robert W. Layman and G. Donald Paxson for their help in the experiments and Messrs. Louis A. Biagi and Robert F. Holsinger for the mechanical design, construction and maintenance of the Homopolar V device.

FOOTNOTES AND REFERENCES

*Work done under the auspices of the U. S. Atomic Energy Commission.

1. O. A. Anderson, W. R. Baker, A. Bratenahl, H. P. Furth, J. Ise, Jr., W. B. Kunkel, and J. M. Stone, in Proceedings of the Second United Nations International Conference on the Peaceful Uses of Atomic Energy, 1958 (United Nations, Geneva, 1958) 32, p. 155; K. Boyer, J. E. Hammel, C. L. Longmire, D. Nagle, F. L. Ribe, and W. B. Riesenfeld, in Proceedings of the Second United Nations International Conference on the Peaceful Uses of Atomic Energy, 1958 (United Nations, Geneva, 1958) 31, p. 319; D. A. Baker and J. E. Hammel, Phys. Fluids 4, 1549 (1961).
2. K. Halbach, W. R. Baker, and R. W. Layman, Phys. Fluids 5, 1482 (1962).
3. J. Mather, this issue.
4. O. A. Anderson, W. R. Baker, A. Bratenahl, H. P. Furth, and W. B. Kunkel, J. Appl. Phys. 30, 188 (1959).
5. O. Buneman, Nature 165, 474 (1950).
6. We take the velocities at the outer electrode because the mean free path of charge-exchange neutrals is short compared with the electrode spacing for the densities used in our experiments.

Figure Captions

Fig. 1 Homopolar V device.

Fig. 2 Voltage and current traces.

Fig. 3 Homopolar Gun I.

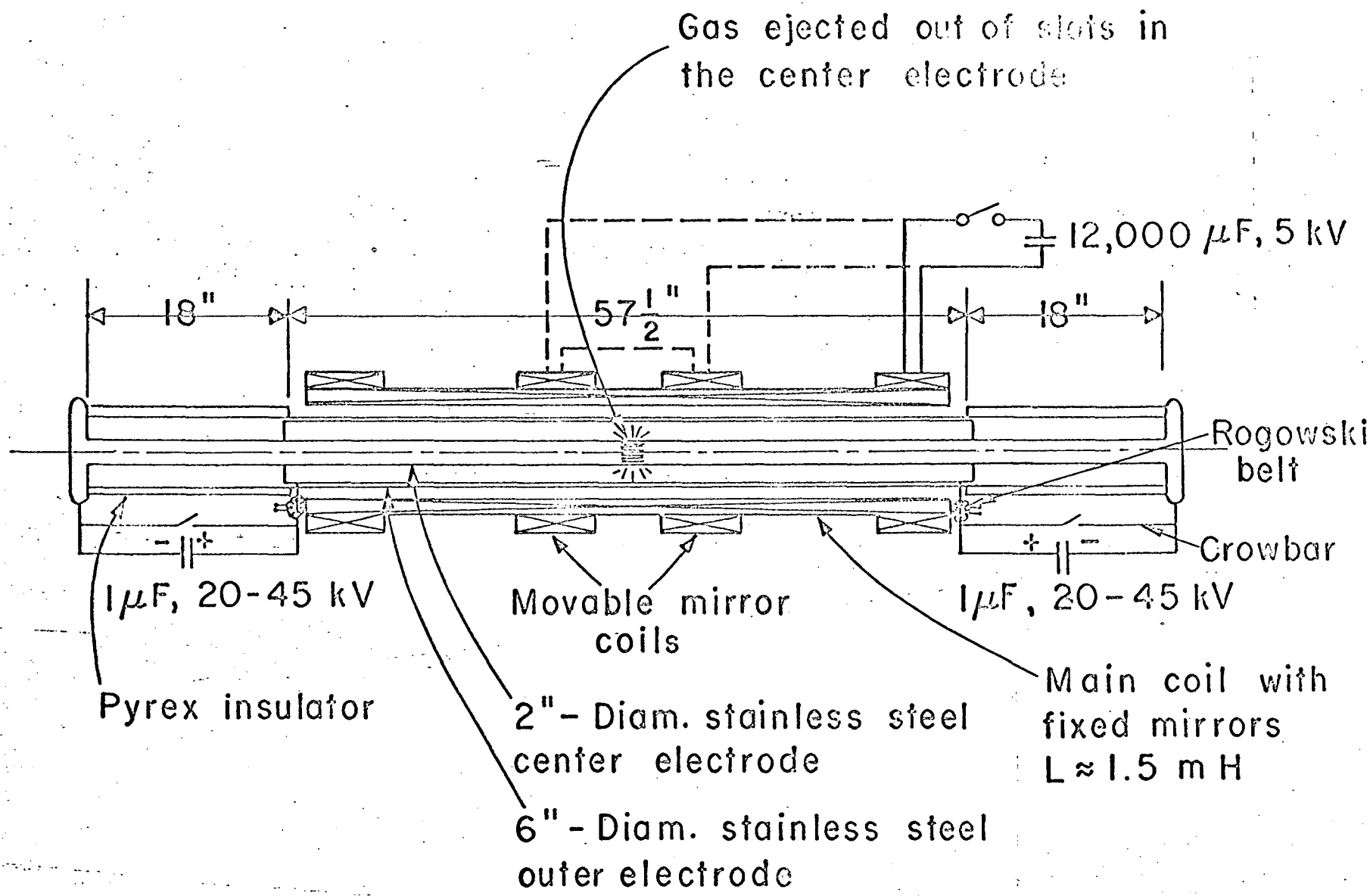
Gas ejected out of slots in the center electrode
12,000 μF, 5 kV
18"
57 1/2"
18"
Rogowski belt
Crowbar
1μF, 20-45 kV
1μF, 20-45 kV
Movable mirror coils
Pyrex insulator
2"- Diam. stainless steel center electrode
Main coil with fixed mirrors L ≈ 1.5 mH
6"- Diam. stainless steel outer electrode
MU-26970

Fig. 1

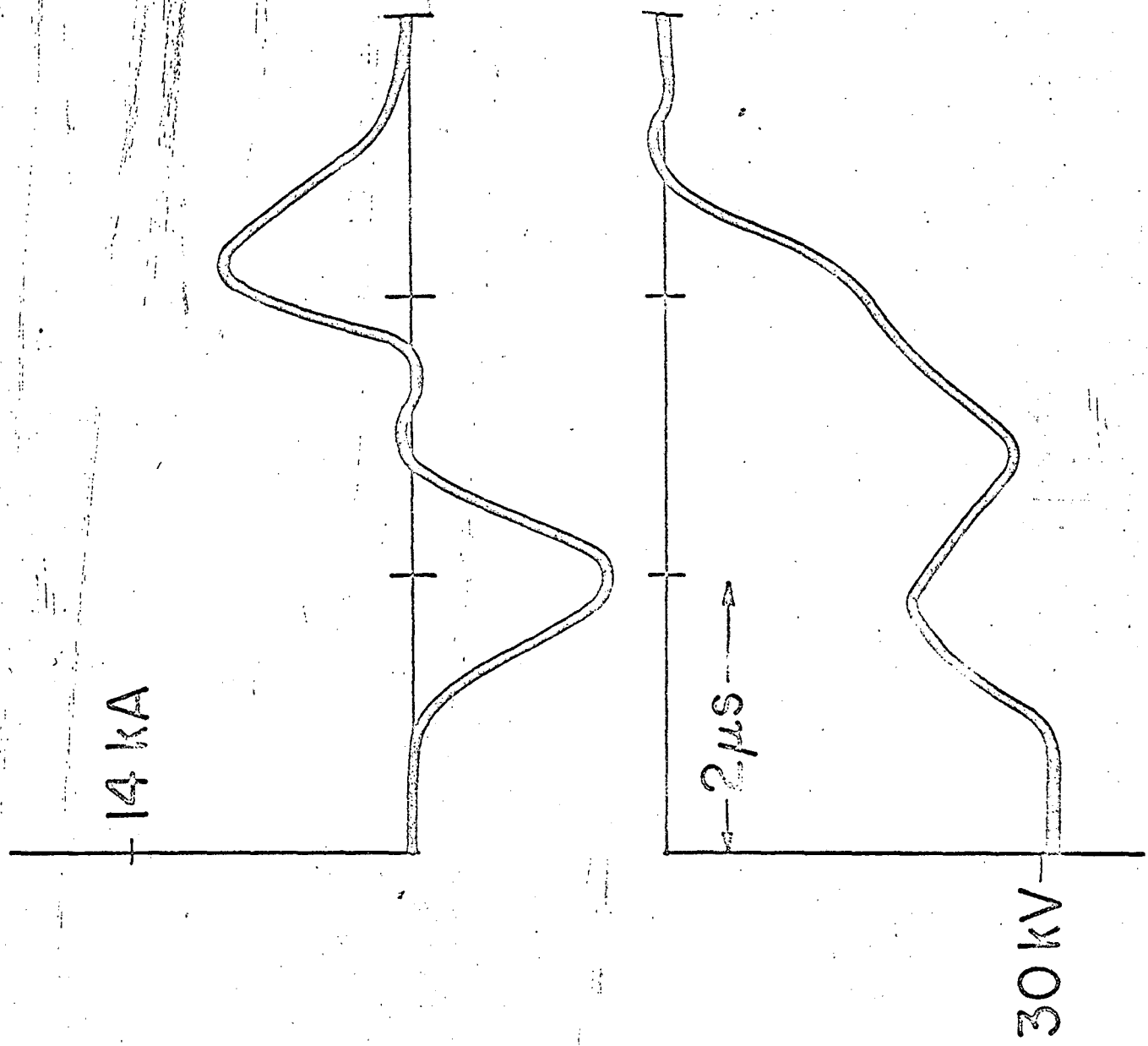

MU-32784

Fig. 2

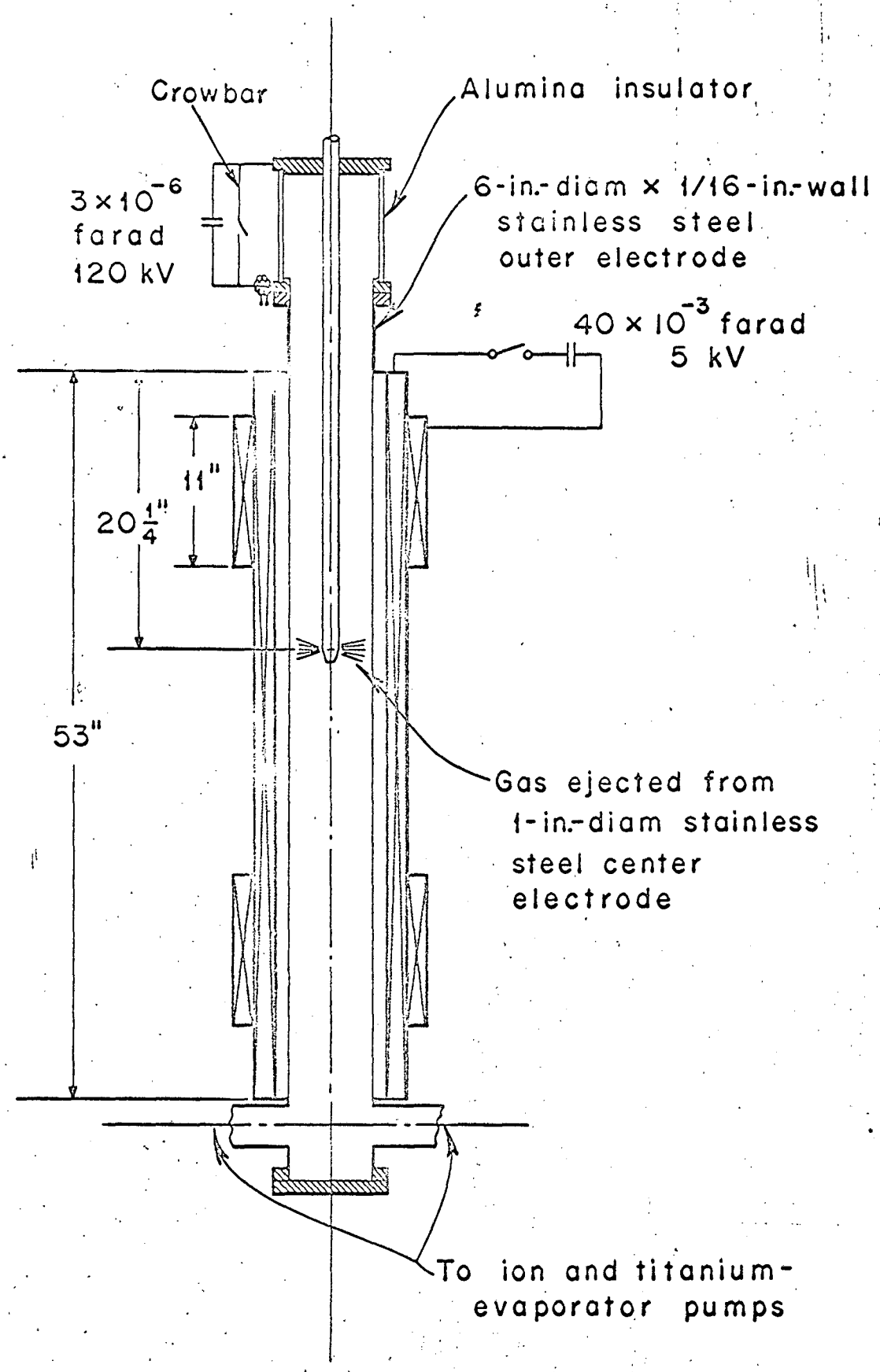

Fig. 3

MU-31750