UCRL 10213

University of California

Ernest O. Lawrence Radiation Laboratory

TWO-WEEK LOAN COPY

This is a Library Circulating Copy which may be borrowed for two weeks. For a personal retention copy, call Tech. Info. Division, Ext. 5545

INTERACTION OF PRISMATIC AND GLISSILE DISLOCATIONS

Berkeley, California

DISCLAIMER

This document was prepared as an account of work sponsored by the United States Government. While this document is believed to contain correct information, neither the United States Government nor any agency thereof, nor the Regents of the University of California, nor any of their employees, makes any warranty, express or implied, or assumes any legal responsibility for the accuracy, completeness, or usefulness of any information, apparatus, product, or process disclosed, or represents that its use would not infringe privately owned rights. Reference herein to any specific commercial product, process, or service by its trade name, trademark, manufacturer, or otherwise, does not necessarily constitute or imply its endorsement, recommendation, or favoring by the United States Government or any agency thereof, or the Regents of the University of California. The views and opinions of authors expressed herein do not necessarily state or reflect those of the United States Government or any agency thereof or the Regents of the University of California.

Research and Development

UCRL-10213
UC-25 Metals, Ceramics,
and Materials
TID-4500 (17th Ed.)

UNIVERSITY OF CALIFORNIA
Lawrence Radiation Laboratory
Berkeley, California

Contract No. W-7405-eng-48

INTERACTION OF PRISMATIC AND GLISSILE DISLOCATIONS

G. Saada and J. Washburn

May 1962

be considered. Even though some of the considerations developed here can apply to HCP crystals and NaCl type ionic crystals, we will only discuss the case of FCC metals.

2. General Remarks

2.1 Long Range Interactions:

Suppose (Fig. 1) a perfect prismatic loop (P) cuts the glide plane (Q) of a moving dislocation L, in two points M and M'.

If the distance d between the moving dislocation and the loop is large compared to the radius R_L of the loop, the interaction between the two dislocations will be very small and the stress exerted by the loop on the moving dislocation will decrease as $1/d^2$. If the distance d is smaller than R, the loop will behave as two independent trees of opposite vector.[8]

The same considerations apply to a Frank sessile loop.

The long range interaction with a helix is somewhat different (Fig. 2a and b). First, at a distance large with respect to R_H, the stress exerted by the helix on the moving dislocation is equal to the stress exerted by a straight dislocation and decreases as 1/d. Suppose now the moving dislocation gets closer to the helix in the way described (Fig. 2a and b ($d < R$)), we see that two cases must be considered:

a) The glide plane of the moving dislocation does not contain the Burgers vector (Fig. 2a) of the helix; in this case the interaction will be like that with a straight intersecting dislocation.[9, 10]

b) The glide plane of the moving dislocation contains the Burgers vector (Fig. 2b) of the helix; it will then be equivalent to two rows of intersecting dislocations, the first row being all of one sign and the second row all of the opposite sign.

We must now consider the cases where the glide plane of the moving dislocation is not cut by the quenched-in dislocation. If the latter is a helical dislocation parallel to the glide plane, it will behave as a straight segment of dislocation; if it is a Frank sessile loop, or a perfect loop, it will behave as an obstacle only if the distance between the loop and the glide plane of the moving dislocation is smaller than the radius of the loop.

When a moving dislocation passes close to a loop there are three processes that may bring the two into contact:

a) cross slip of the moving dislocation

b) conservative climb of the loop as observed by Kroupa and Price[13]

c) glide of a perfect loop parallel to its Burgers vector

For small loops, less than a few hundred angstroms in diameter, it seems likely that the two will be brought into contact by one of these processes if the distance between the nearest part of the loop and the moving dislocation is less than the radius of the loop.

2.2 Contact Interaction of Dislocations with Opposite Burgers Vector

When a dislocation of Burgers vector $\bar{b}$ cuts a helix of Burgers vector $-\bar{b}$, the helix is broken[3] into loops by the mechanism described in Fig. 3.

When a dislocation of Burgers vector $\bar{b}$ cuts a loop of Burgers vector $-\bar{b}$ (Fig. 4) the dislocation acquires a segment M, M' that does not lie in the glide plane (Fig. 4). If the jogs associated with this segment can glide away parallel to the Burgers vector, then the size of the loop is decreased after the intersection.

2.3 Junction Reaction[7, 14]

When two dislocations lying in their glide plane and whose Burgers vectors $\bar{b}_1$ and $\bar{b}_2$ have a negative scaler product cut each other, it is well known that the quadruple node at the intersection is unstable and splits into two triple nodes connected by a junction dislocation lying at the intersection of the glide planes and whose Burgers vector b_j is such that:

$$\vec{b}_1 + \vec{b}_2 + \vec{b}_j = 0 \qquad (1)$$

This reaction will be referred to as the junction reaction (Fig. 5). It has been shown elsewhere that this reaction, which occurs in FCC metals and ionic crystals, plays an important role in workhardening.[6-9,11-12] Therefore, it is worthwhile to study in some detail the case of the interaction of a dislocation moving in its glide plane and a dislocation loop which is only able to glide on its glide cylinder. In this case, it is obvious that the junction dislocation will lie at the intersection of the two glide surfaces. It can be either a straight line, if the glide plane of the moving dislocation contains the Burgers vector of the prismatic loop or of the helix, or an ellipse lying at the intersection of the two surfaces.

2.4 Creation of Jogs by Cutting of Prismatic Loops

When a dislocation moving in its glide plane cuts another dislocation both get jogged.[15] The jog on the moving dislocation may either glide or climb. In the second case, it must create defects which can be either vacancies or interstitials.[16]

In the case of the intersection with prismatic dislocation loops, jogs of opposite sense will always be formed in pairs. If these can glide together at the cusp formed by the loop, then the average number of point defects created is proportional to the radius of the loops.

In the next section, these interactions will be considered in detail with particular emphasis on face centered cubic crystals.

3. Interaction of a Moving Dislocation with a Frank Sessile Loop

Let us consider a Frank sessile loop cut by a moving dislocation. Silcox and Hirsch[2] have described the mechanism of the intersection as shown in Fig. 6. First: The two partials of the moving dislocation recombine to give a perfect dislocation that then splits in the plane of the stacking fault to give a Frank sessile and a Shockley partial. Second: The Shockley partial sweeps out the stacking fault and combines with the Frank sessile dislocation at the loop boundary to form new lengths of perfect dislocation.

As a result, the moving dislocation gets a large segment that does not lie on its original glide plane while the Frank sessile loop that is left behind has been reduced in size.

This process needs first an energy W_1 for the recombination of the moving dislocation. W_1 must be of the order of the cross slip energy.[6]

Second, an energy W_2 is necessary for the sweeping of the stacking fault. This energy is the difference between the increase of the line tension energy of the Shockley partial and the stacking fault energy of the area swept out. This energy can be estimated for a triangular stacking fault loop. To simplify the calculation, it will be assumed that the Shockley partial has the shape shown in Fig. 6.

The energy W_2 for the processes is:

$$W_2(x) = xTs\left(1 - \frac{y}{y_o} + \frac{x}{2y_o}\right) \qquad (2)$$

where

T_s is the line tension of the Shockley partial

y_o is $= \frac{2Ts}{\gamma}$

γ is the stacking fault energy

Based on Formula 2, two cases must be considered:

a) $y \leqslant y_o$

W_2 can be represented as in Fig. 7a. The energy for the process is:

$$\Delta W_2 = W_2(y) - W(o) = y\,T_s \left(1 - \frac{y}{2y_o}\right) \tag{3}$$

Which varies with y as indicated in Fig. 7b, until a maximum value ΔW_{2m}:

$$\Delta W_{2m} = \frac{T_s y_o}{2} \tag{4}$$

The maximum value of $F_2 = \frac{dW_2}{dx}$ is $F_2(y)$

$$F_2(y) = T_s$$

b) $y \geqslant y_o$

W_2 can be represented as in Fig. 7c. The total energy ΔW_2 for the process is then:

$$\Delta W_2 = W(y) - W(y - y_o) = \frac{T_s y_o}{2} = \Delta W_{2m}$$

The maximum value of F_2 is still $\frac{dW_2}{dx}$

The potential barriers in both cases can be represented as in Fig. 8a and 8b.

Numerical values

Taking $T_s = \frac{\mu b_s^2}{2}$ if b_s is the length of the Burgers vector of a Shockley dislocation, $b_s = \frac{b}{\sqrt{3}}$. For metals with low stacking fault energies, $\gamma \simeq \frac{\mu b}{300}$ which means $y_o \simeq 30b$.

We can thus calculate $\Delta W_{2m} \simeq 6\ e\sqrt{\ }$

$$F_2(y) = \frac{\mu b}{12}$$

We see from this that the energies involved, and therefore the stresses necessary for the process if the loop is large enough, are very high.

For the process pictured in Fig. 9, which must occur when the sign of the cutting dislocation is changed, we get for the energy:

$$W = xT_s \left[3 - \frac{y}{y_o} - \frac{x}{2y_o} \right] \qquad (6)$$

The same sort of reasoning leads to the following conclusions:

For $y < 3y_o$, the cutting process needs an activation energy $\Delta W_2'$

$$\Delta W_2' = \frac{(3y_o - y)^2}{2y_o} T_s$$

For $y > 3y_o$, the cutting process does not need any energy, except for the constriction.

As a consequence, loops whose size is smaller that $3y_o$ will be strong obstacles to moving dislocations. Loops with a larger size will be easily cut at a distance larger than $3y_o$ from any point of the triangle and thus will become shortened to the critical value.

This calculation gives only a rough estimate of the energy necessary to achieve the cutting process but it suggests that it is quite high even for loops of a size smaller than that which can be seen by transmission electron microscopy.

The creation of a jog on a stacking fault, as previously described by Thompson,[17] should require an energy of the same order of magnitude. This type of barrier may be important in work hardened and electron irradiated crystals as well as in quenched metals.

4. Interaction of a Moving Dislocation with a Helical Dislocation

Consider a dislocation gliding in a plane parallel to the Burgers vector $\vec{b}_H$ of a helical dislocation and let us assume that the Burgers vector $\vec{b}_M$ of the moving dislocation is such that:

$$\vec{b}_M \cdot \vec{b}_H < 0 \tag{7}$$

At each point of intersection of the helix with the dislocation (see sequence of Fig. 10), the quadruple node will split into two triple nodes, due to the junction reaction. From the argument which was developed for a row of parallel, identical dislocations,[9] it can be seen that the nodes will split until the dislocation is broken into loops having no interaction with the straight dislocation. This reaction generalizes previous results by Amelinckx, Bontinck and Seitz[3] and can occur quite frequently in FCC alloys or NaCl type ionic crystals.

If the glide plane of the moving dislocation is not parallel to the Burgers vector of the helix, the latter will behave like a straight dislocation.

5. Interaction of a Moving Dislocation with Perfect Prismatic Loops

In a FCC metal perfect prismatic loops can have any of the six possible Burgers vectors which we will describe with the help of Thompson's[17] notation (Fig. 11). They have been shown to lie either in $\{110\}$ or (111) planes.[18]

Let us consider a prismatic loop of Burgers vector $\vec{AD}$. The axis of its glide cylinder is also in the direction of $\vec{AD}$. It is easy to see that this loop has the same energy whether it lies in a plane such as a or d (Fig. 12). Suppose now the plane of the loop is rotating around BC from

from a to d. The total length of dislocation would decrease until the plane of the loop is perpendicular to $\vec{AD}$, and then increase. The position of the plane corresponding to the minimum length of the loop is the $\{110\}$ position. In the (110) plane, the loop is about 20% shorter than in a (111) plane. But in the former case, the loop is pure edge and in the latter, it is mixed. Moreover, the core energy must be larger in the first case than in the second case. Thus, it is reasonable to think that the energy of the loop does not vary significantly when the loop lies in any plane containing BC and within the angle between the planes a and d.

We will assume a moving dislocation glides in the plane a and has $\vec{BC}$ as its Burgers vector. Interactions with prismatic loops having each of the six possible Burgers vectors will be studied.

First, we have shown in paragraph 2 that there existed with all the loops some long range interaction which could be reduced to the long range interactions calculated in the forest theory.[8-10] The corresponding internal stress will be given by:

$$\sigma_1 = \frac{\mu b}{\beta_1 \ell_1} \tag{8}$$

where

μ is the elastic modulus

b is the length of the Burgers vector

ℓ_1 is the distance between loops giving this interaction

β_1 is a coefficient of the order of 10

This interaction has been studied in some detail elsewhere[9, 10, 12] and we will just summarize the results:

a) Close to the fixed dislocation, the intersection can be either an attraction or a repulsion depending on the relative orientation of the two dislocations and of their Burgers vectors.

b) Unless the two trees are very close, one can consider that they are passed independently.

c) The stress required for cutting is temperature independent. It must be noted that the present analysis applies even if the loop is of the Frank sessile type.

We will now consider, with the same assumptions, the reactions which occur at the contact of the moving dislocation and of the prismatic loops:

a) The prismatic dislocation has $\vec{AD}$ (or $\vec{DA}$) as its Burgers vector. Then no recombination can occur because the Burgers vectors of the fixed and of the moving dislocation are at ninety degrees. There exist only the long range interactions which have been previously described.

b) The moving dislocation has $\vec{BC}$ or $\vec{CB}$ as its Burgers vector. The result of the intersection is depicted in the sequence of Fig. 4. After the cutting, the loop is smaller and the moving dislocation acquires some large jogs MM'. If the moving dislocation is not purely screw, these jogs will probably be able to glide and follow it. Therefore, this interaction will cause a progressive destruction of the substructure. If they do not glide, the arms ML and M'L' of the moving dislocation will develop in spiral, meet and annihilate without destroying the loop. Provided there are equal numbers of loops for each of the possible $\frac{a}{2}$ <110> Burgers vectors, a given dislocation will interact in this way with one loop out of six. Therefore, the number of these events associated with an increment of strain is:

$$dn = \frac{NR}{3b}\, de \qquad (9)$$

where

de is the amount of strain

N is the number of loops per unit volume

R is the average radius of the loops

If it is assumed that the moving dislocations are not nearly screw, i.e., each time a loop is cut the jogged segment MM' is always able to glide away conservatively in the direction of its Burgers vector, then we can predict that a uniformly distributed shear of 10% will make one loop out of six smaller than 10b in diameter. If shear takes place simultaneously in all of the six glide systems, then all the loops will be swept away. The experimentally observed disappearance of prismatic loops in quenched aluminum deformed by rolling[19] probably occurs by this mechanism.

If the moving dislocation is nearly screw, the jogged segment will not be able to glide. There will then be immobile points along the dislocation line. Continued motion will require bowing out between these points which can occur only if the stress is greater than:

$$\sigma_2 = \frac{Gb}{\beta_2 \ell_2} \tag{10}$$

where

$\beta_2 \simeq 2$ and ℓ_2 is the distance between loops giving this sort of interaction. In this case, the loops may be left unchanged.

c) Suppose now that the prismatic dislocation has BD or DC (or their opposite) Burgers vector and lie in a plane cutting the plane a.

In Fig. 13a the glide cylinder of the loop, P, is cut by the glide plane b of the dislocation, G, along two straight lines. Let M be the point where the configuration of the dislocation lines and their Burgers

vectors is such as to allow the junction reaction to occur. Then the resultant dislocation M_1M_2 must lie along the intersection of the two glide surfaces as depicted in Fig. 13b.

Assume first that the prismatic loop P lies in the plane (111). The increase in length and the gain in energy cannot be evaluated with high precision, but the reaction should occur. If the configuration is as depicted on Fig. 13b, there will exist a tendency for the loop to rotate toward the plane (110). In that case, it can be seen that no junction reaction can occur, because it should then cause too much increase in the total length of dislocation.

If, however, the repulsive stress is large enough to allow the loop to turn to the plane, a, then a new type of reaction will occur which we will describe in part d.

d) If the prismatic loop has $\vec{AB}$ or $\vec{AC}$ or their opposites as Burgers vector, the intersection of the glide plane of the moving dislocation with the glide cylinder of the loop is an ellipse. It can be seen from Fig 14 that the junction reaction can occur.

It also seems likely that in some cases when the prismatic loop lies in plane C, it can be pushed by the moving dislocation and rotate to plane a.

If the loop is in a plane parallel to the glide plane of the moving dislocation or on the same plane as the moving dislocation, then conservative climb might occur if there is repulsion, or the reaction shown in Fig. 15 if there is attraction. The result in the latter case is a change in the Burgers vector of the loop. It can be seen that the energy gained by this process can be very large, of the order of $\frac{\mu b^2 R}{3}$, if R is the radius of the loop.

Friedel[8] has analyzed in some detail the way in which a moving dislocation behaves by zig-zaging through randomly distributed loops (Fig. 16). The stress required to move the dislocation is given by a formula of the type:

$$\sigma_3 = \frac{\mu b}{\beta_3 \ell_3}$$

where

$\beta_3 \simeq 2$ and ℓ_3 is the distance between such loops along the zig-zags.

6. Application to the Quench Hardening of FCC Metals

6.1 Case of Aluminum

In aluminum, the quenched substructure is made of large Frank sessile loops lying in the <111> planes and of perfect prismatic loops.[20] As shown in another publication[21] there probably does not exist a simple way to transform one into the other and thus it is not sure whether or not both types of loops come from the same origin.

Consider first the case of large Frank sessile loops. It has been shown in Section 3 that they were not strong obstacles to the motion of dislocations. But they will be more or less gradually swept out. When they become small enough they will act as strong barriers. Therefore, the regions where there are Frank sessile loops may be difficult to deform.

If we consider now the case of a dislocation moving through randomly distributed perfect prismatic loops, we can say that it will sweep out about 1 loop out of 6 by the reaction described in paragraph 5, have short range interactions with 4 loops out of 6, and long range interactions with all of them.

Friedel's considerations[8] apply to this case and it is then possible to calculate the stress due to a loop substructure as:[8]

$$\sigma = \frac{\mu b}{\beta} N^{2/3} R$$

with β of the order of 4. This stress will be temperature independent.

A temperature dependent stress arises from the creation of jogs and we expect the total flow stress to vary in the same way as for work-hardening. These two facts are in good agreement with the experimental results of Maddin and Cottrell[5] and Tanner and Maddin.[22]

Let us assume that we deform, in tension, a single crystal oriented in such a way as to glide on one system only. It should have a yield stress higher than the yield stress of a slowly cooled crystal (Fig. 17). It will harden in a somewhat similar way until glide on a second system begins. At that moment, dislocations moving on the second system will destroy some additional loops which were obstacles for the moving dislocations. This will result in a softening of the crystal which has been observed by Tanner and Maddin.[22]

It is also possible to predict that a quenched single crystal deformed in tension along <111> should exhibit a somewhat higher yield strength than a slowly cooled crystal but should have an initial period of low work-hardening rate due to the sweeping away of all the loops by moving dislocations on the six active slip systems. Expected stress strain curves are shown in Fig. 17b.

6.2 Case of other FCC metals

All other quenched FCC metals which have been investigated experimentally, contain stacking fault tetrahedra.[2] For these metals, our analysis is thus not complete. However, some general remarks can be made:

a) Stacking fault loops are very strong barriers.

b) Tetrahedra will probably act as stronger barriers than stacking fault loops.

c) Perfect loops act as barriers in a somewhat complicated way. But the stress due to the loops is smaller than that due to stacking fault loops.

We can, thus, as a very rough estimate, determine the stress due to defects randomly distributed at a distance ℓ apart:

$$\sigma = \frac{\mu b}{2\ell} \tag{13}$$

If there are N defects per unit volume and if their radius is R, the previous formula becomes:

$$\sigma = \frac{\mu b}{\sqrt{2}} (NR)^{+1/2} \tag{14}$$

For quenched gold, this should give $\sigma \simeq 5 \times 10^{-4}\mu$. From the results of Mehii and Kauffman we get $\sigma \simeq 10^{-3}\mu$.

Interstitials may also cluster into small Frank sessile loops which can be small enough not to be resolved by the electron microscope but have a large effect. These interstitials could be created by irradiation or even by work-hardening.

Finally, we would like to remark that the triple nodes formed during the intersection of a loop can climb with a moving dislocation only short range diffusion of atoms giving loops of the configuration shown in Fig. 18. Loops having this shape have been observed in quenched aluminum.

ACKNOWLEDGMENT

This work was supported by the United States Atomic Energy Commission through the Inorganic Materials Division of the Lawrence Radiation Laboratory.

1. Frank, F. C., Carnegie Institute of Technology (Pittsburgh) Symposium on the Plastic Deformation of Crystalline Solids, O.N.R. p. 150 (1950), Deformation and Flow of Solids, Berlin. Springer., p. 73 (1956), Seitz, F., Phys. Rev., 79, 890 (1950).

2. Hirsch, P. B. and Silcox, J., Growth and Perfection of Crystals, p. 262, Wiley (1958).

3. Amelinckx, S., Bontinck, W., Dekeyser, W. and Seitz, F., Phil. Mag. 2, 355 (1957), Bontinck, W., Phil. Mag. 2, 561 (1957), Bontinck, W. and Amelinckx, S., Phil. Mag. 2, 94 (1957).

4. Meshii, M. and Kauffman, J. W., Phil. Mag. 5, 57, 939 (1960).

5. Maddin, R. and Cottrell, A. H., Phil. Mag. 46, 735 (1955).

6. Friedel, J., Symposium on the Internal Stresses and Fatigue in Metals, Detroit and Warren, p. 220 (1958).

7. Hirsch, P. B., Aachen Colloquium (1958).

8. Friedel, J., Proceedings of the Conference of Berkeley (1961).

9. Saada, G., Thesis, Paris (1960).

10. Saada, G., Acta. Met. 8, 200 (1960).

11. Saada, G., Acta. Met. 8, 841 (1960).

12. Saada, G., Proceedings of the Conference of Berkeley (1961).

13. Kroupa, F. and Price, B., Phil. Mag. 6, 62, 243 (1961).

14. Frank, F. C., Bristol Conference, London (1955).

15. Heidenreich, R. D., and Shockley, W., Bristol Conference, London (1955).

16. Seitz, F., Adv. Phys. 1, 43 (1952).

17. Thompson, N., Bristol Conference, London (1955).

18. Kuhlmann, Wilsdorf D. and Wilsdorf, H. G. F., J. Appl. Phys. 313, 516 (1960).

19. Washburn, J. and Vandervoort, R., Phil. Mag. 5, 24 (1960).

20. Vincotte, F., M.S. Thesis, University of California, Berkeley (1962).

21. Saada, G., to be published.

22. Tanner and Maddin, Acta. Met. 7, 2, 76 (1959).

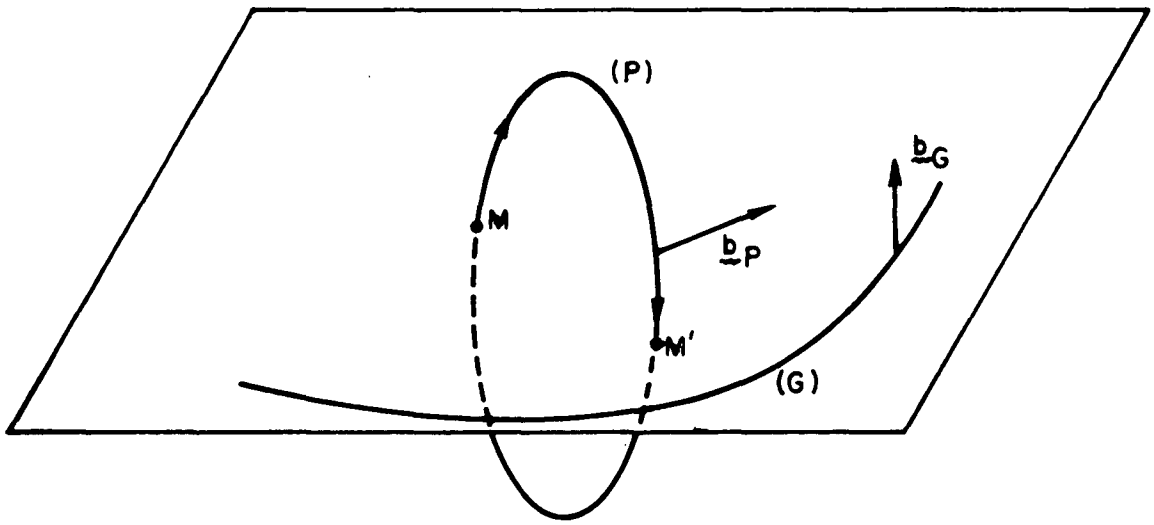

MU-27500

Fig. 1 Long range interaction between a prismatic loop and a glissile loop.

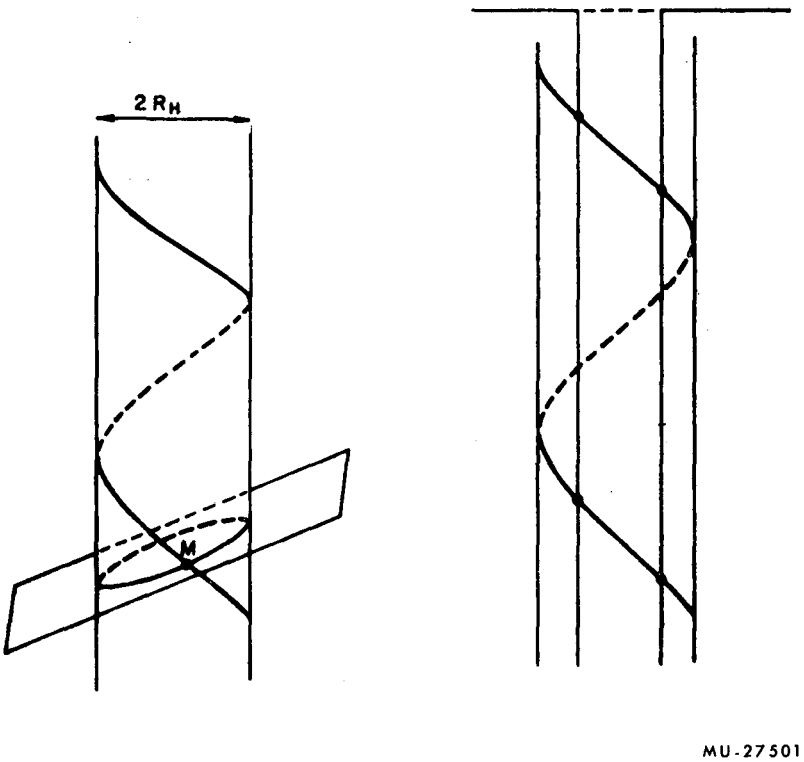

Fig. 2 Long range interaction between a helical dislocation and a glissile dislocation.

a) The glide plane of the moving dislocation does not contain the Burgers vector of the helical dislocation.

b) The glide plane of the moving dislocation contains the Burgers vector of the helical dislocation.

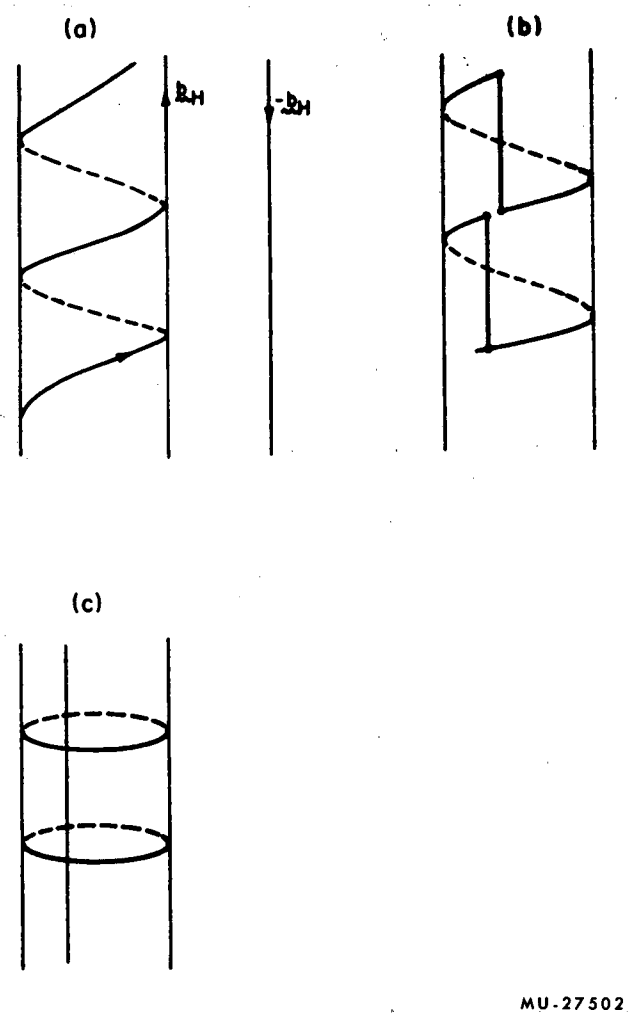

Fig. 3 Intersection of a helical dislocation and a straight dislocation with opposite Burgers vectors. (Following Amelinck et al.[3])

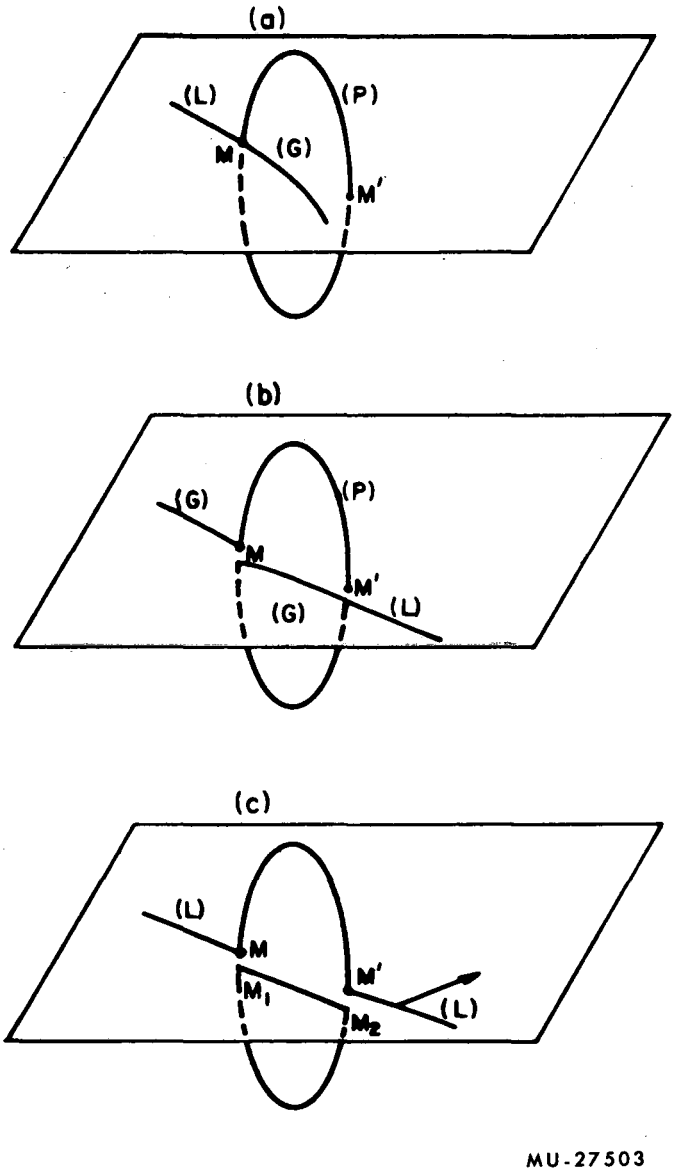

Fig. 4 **Intersection of a prismatic dislocation with a moving dislocation of opposite Burgers vectors.**

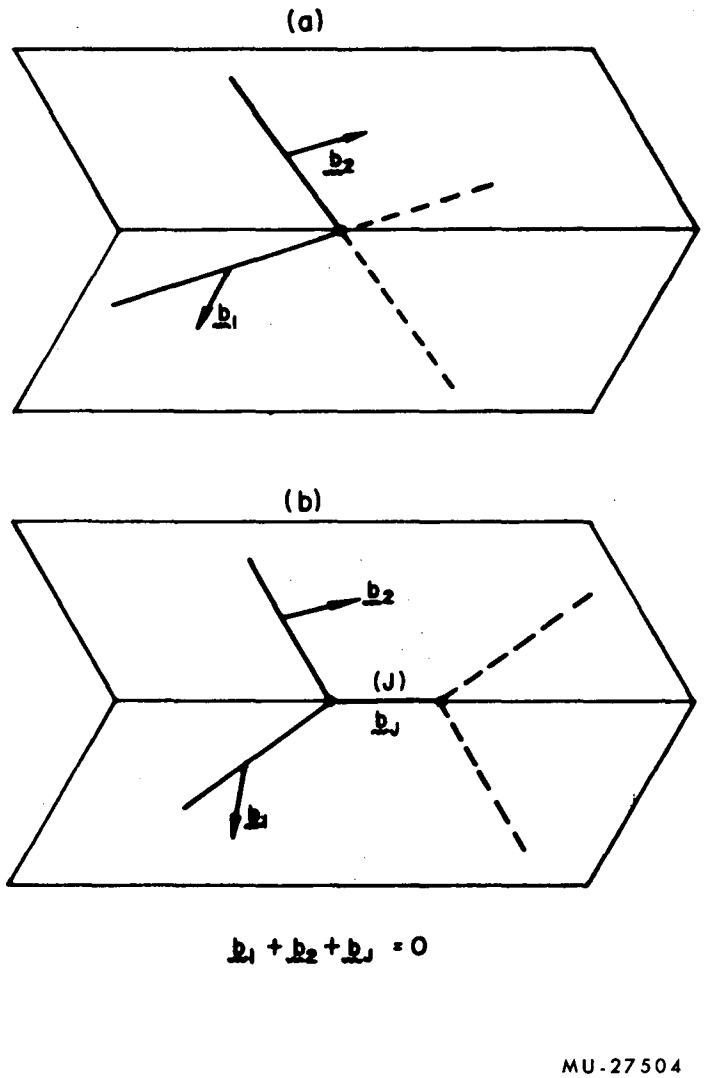

Fig. 5 **Junction reaction for two dislocations moving in their glide plane.**

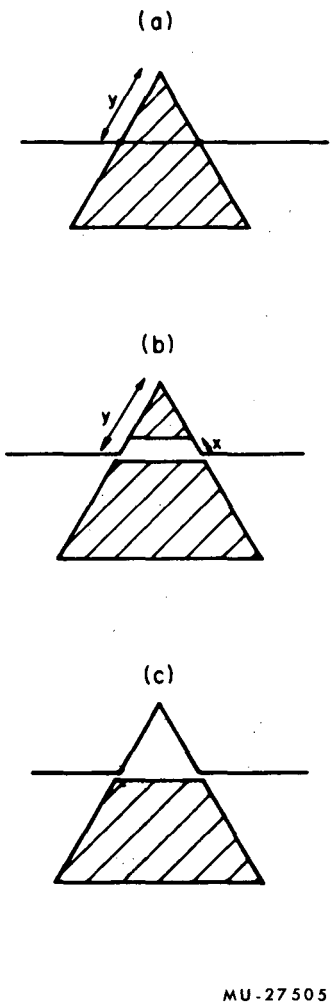

Fig. 6 **Interaction of a moving dislocation with a Frank sessile loop. (Following Silcox and Hirsch[3])**

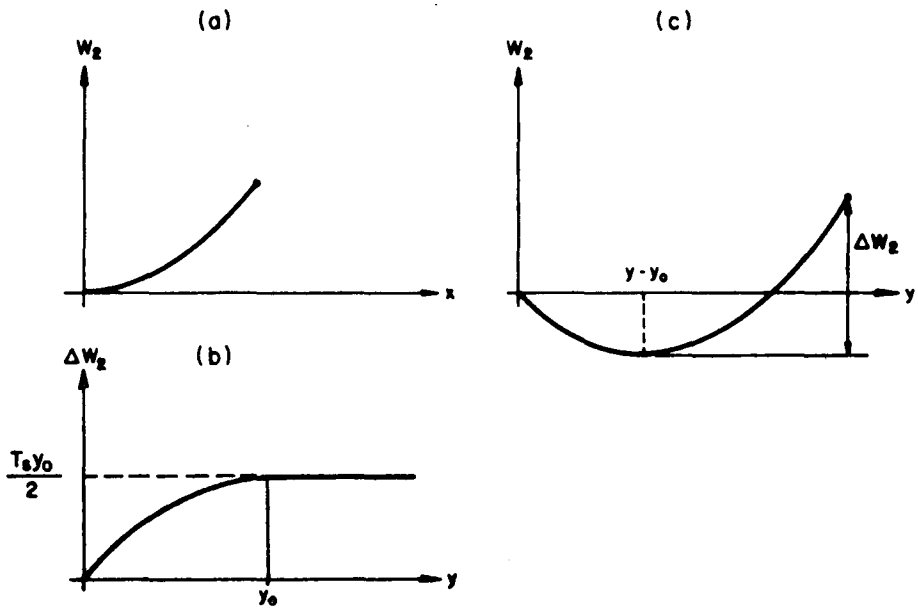

MU-27506

Fig. 7 Energies for the interaction of a moving dislocation with a Frank sessile loop.

a) Variation of W_2 with x for $y \leq \frac{2Ts}{\gamma} = y_0$.

b) Variation of the energy ΔW_2 with y.

c) Variation of W_2 with y for $y \geq \frac{2Ts}{\gamma} = y_0$.

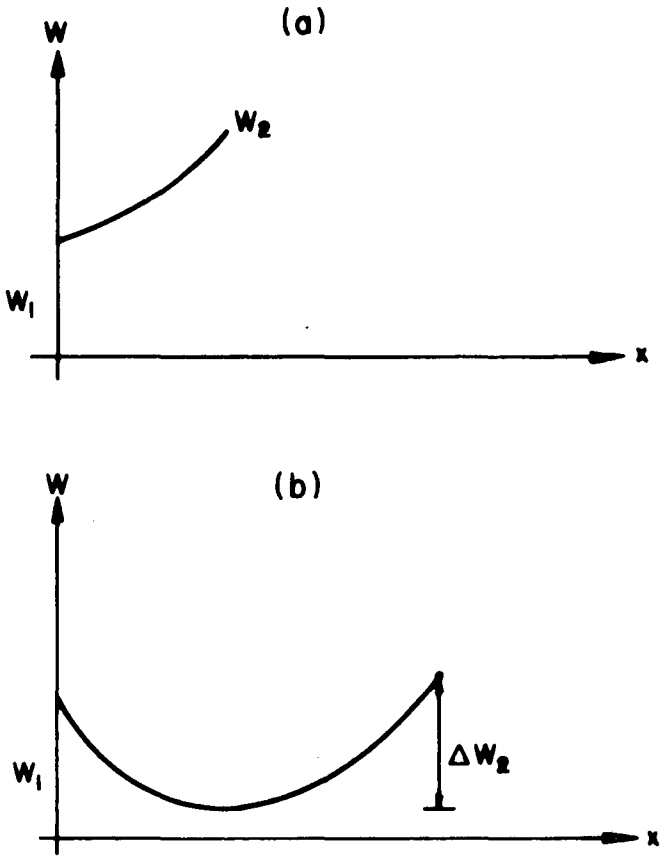

MU-~~28507~~ 27507

Fig. 8 **Potential barriers for the interaction of a glissile dislocation with a Frank sessile dislocation.**

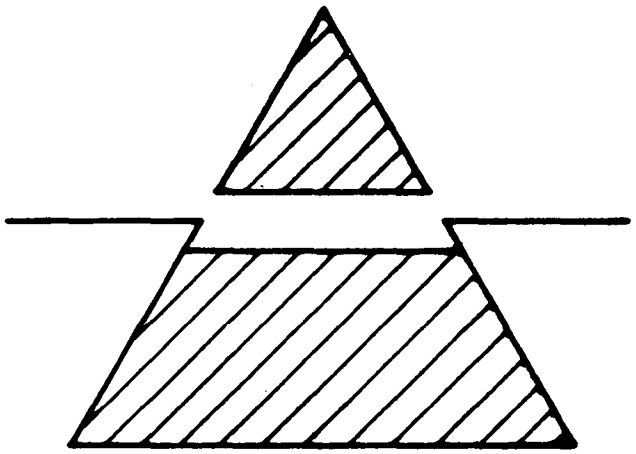

MU-27508

Fig. 9

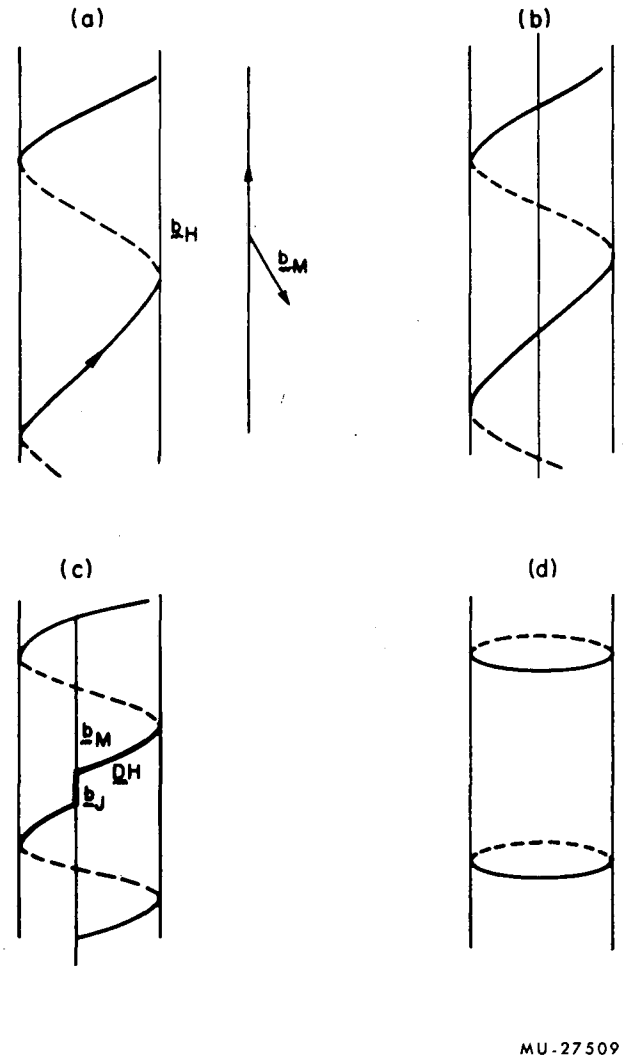

Fig. 10 **Junction reaction between a dislocation moving in its glide plane and a helical dislocation.**

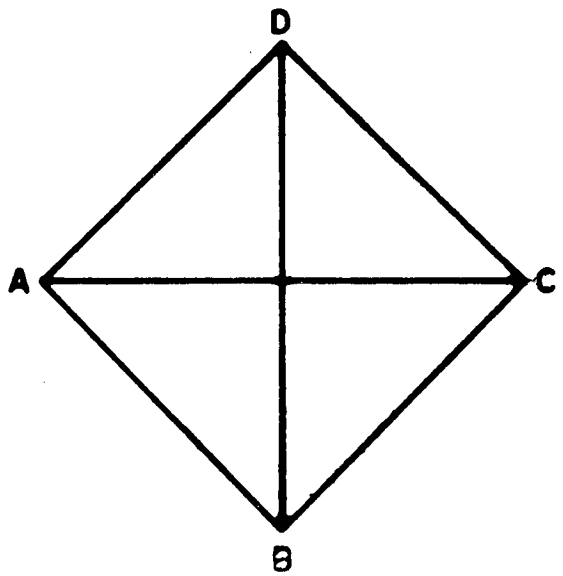

MU-27510

Fig. 11 Thompson tetrahedron.[17]

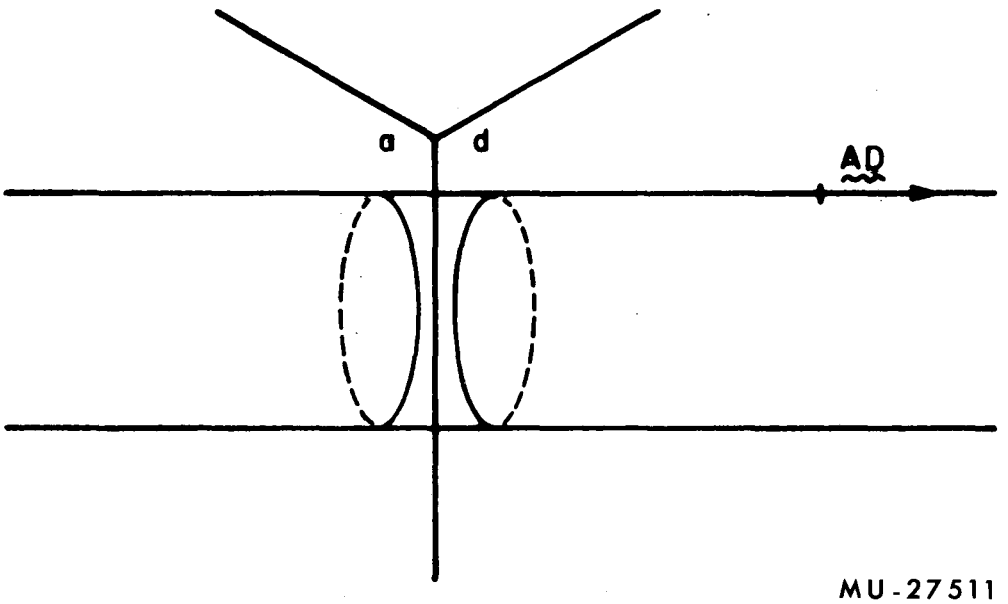

Fig. 12

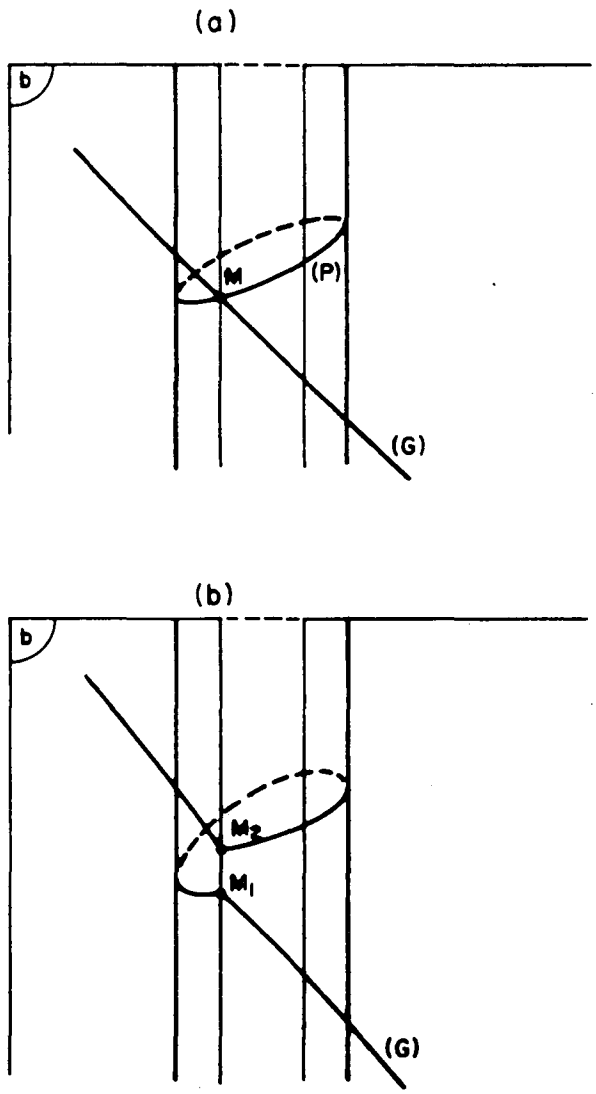

MU-27512

Fig. 13 Junction reaction at the intersection of a dislocation moving in its glide plane and a perfect prismatic dislocation.

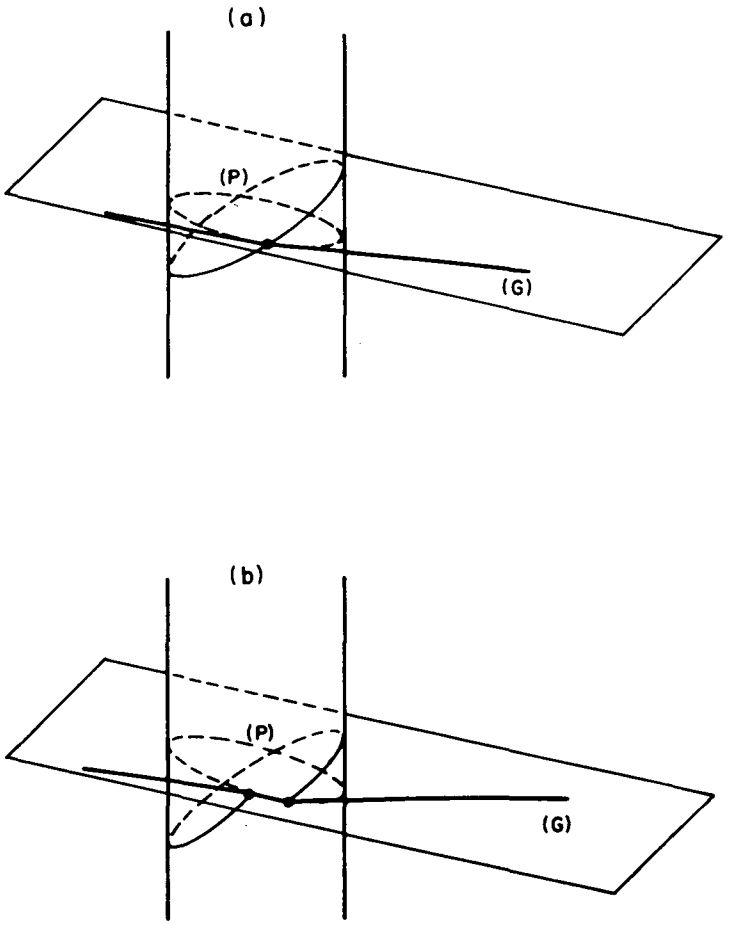

MU-27513

Fig. 14 Same as Fig. 13

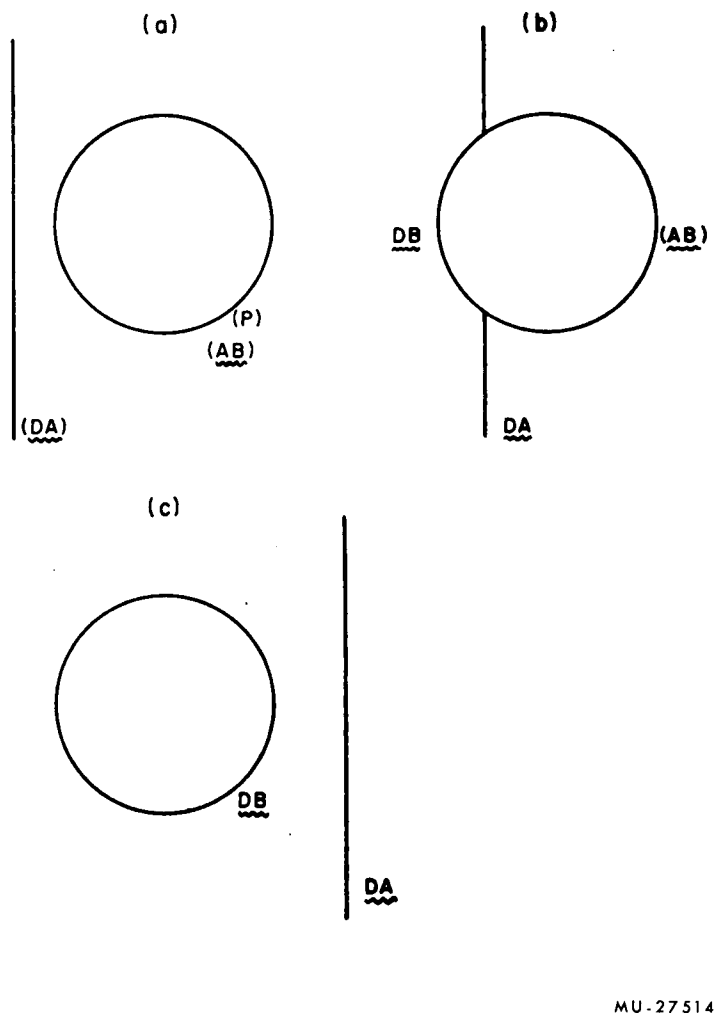

Fig. 15 Change in the Burgers vector of a prismatic loop.

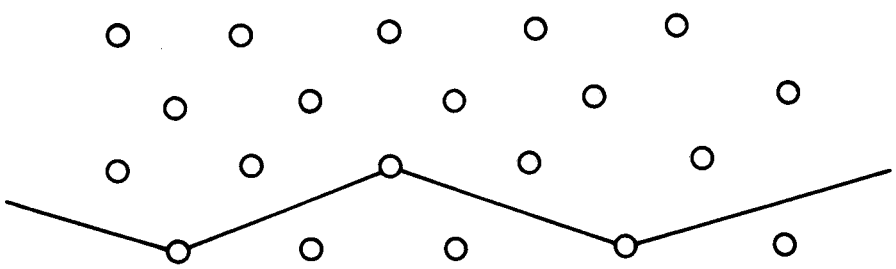

MU-27515

Fig. 16 Zig zaging dislocation (Following Friedel[8])

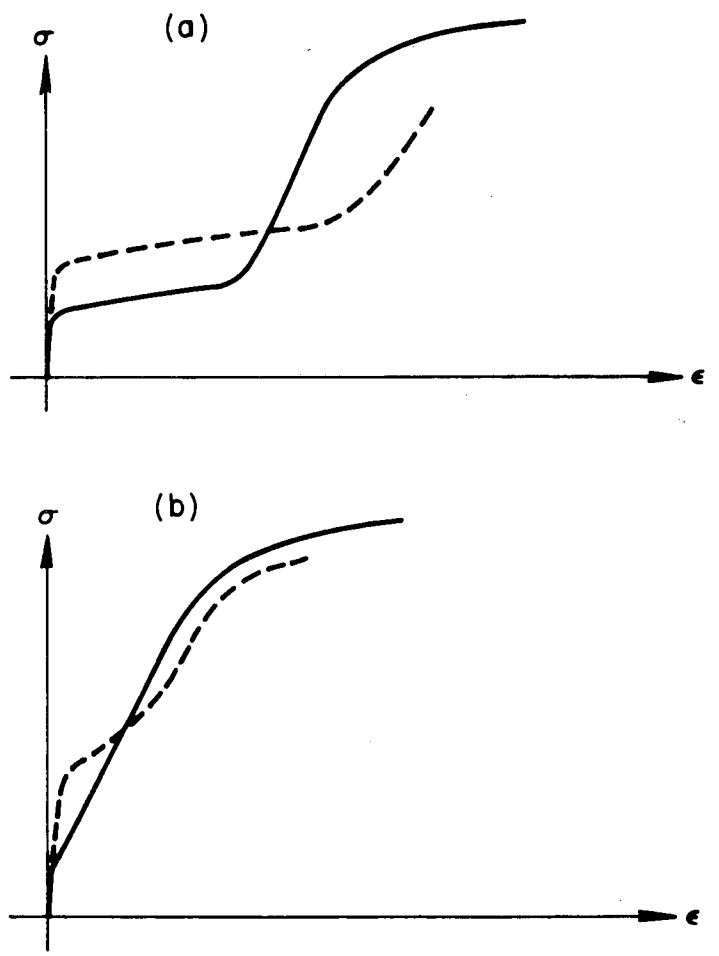

Fig. 17 Stress strain curves of quenched and slowly cooled crystals.

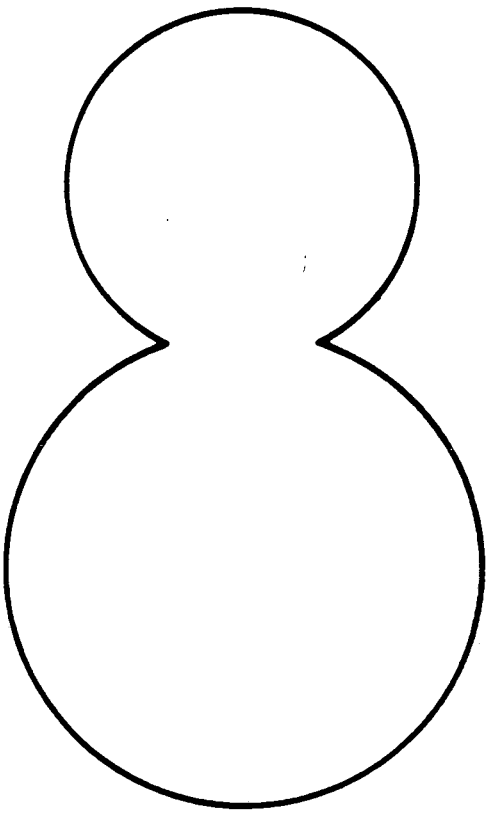

MU-27517

Fig. 18

This report was prepared as an account of Government sponsored work. Neither the United States, nor the Commission, nor any person acting on behalf of the Commission:

A. Makes any warranty or representation, expressed or implied, with respect to the accuracy, completeness, or usefulness of the information contained in this report, or that the use of any information, apparatus, method, or process disclosed in this report may not infringe privately owned rights; or

B. Assumes any liabilities with respect to the use of, or for damages resulting from the use of any information, apparatus, method, or process disclosed in this report.

As used in the above, "person acting on behalf of the Commission" includes any employee or contractor of the Commission, or employee of such contractor, to the extent that such employee or contractor of the Commission, or employee of such contractor prepares, disseminates, or provides access to, any information pursuant to his employment or contract with the Commission, or his employment with such contractor.