UCRL-10221
Cy. 2

University of California

Ernest O. Lawrence Radiation Laboratory

TWO-WEEK LOAN COPY

This is a Library Circulating Copy which may be borrowed for two weeks. For a personal retention copy, call Tech. Info. Division, Ext. 5545

Berkeley, California

DISCLAIMER

This document was prepared as an account of work sponsored by the United States Government. While this document is believed to contain correct information, neither the United States Government nor any agency thereof, nor the Regents of the University of California, nor any of their employees, makes any warranty, express or implied, or assumes any legal responsibility for the accuracy, completeness, or usefulness of any information, apparatus, product, or process disclosed, or represents that its use would not infringe privately owned rights. Reference herein to any specific commercial product, process, or service by its trade name, trademark, manufacturer, or otherwise, does not necessarily constitute or imply its endorsement, recommendation, or favoring by the United States Government or any agency thereof, or the Regents of the University of California. The views and opinions of authors expressed herein do not necessarily state or reflect those of the United States Government or any agency thereof or the Regents of the University of California.

International Conference on High Energy Physics
CERN-1962

UCRL-10221

UNIVERSITY OF CALIFORNIA

Lawrence Radiation Laboratory
Berkeley, California

Contract No. W-7405-eng-48

ELASTIC K^+-p SCATTERING AT 0.97, 1.17, AND 1.97 BeV/c

V. Cook, D. Keefe, L. T. Kerth, P. G. Murphy, W. A. Wenzel, and T. F. Zipf

May 24, 1962

(To be presented by D. Keefe at the Conference on High Energy Physics, CERN)

UCRL-10221

ELASTIC K^+-p SCATTERING AT 0.97, 1.17, AND 1.97 BeV/c†

V. Cook, D. Keefe, L. T. Kerth, P. G. Murphy,‡‡
W. A. Wenzel, and T. F. Zipf
Lawrence Radiation Laboratory
University of California
Berkeley, California

May 24, 1962

1. INTRODUCTION

Previous experiments on elastic K^+-p scattering have been carried out at momenta up to 810 MeV/c by using bubble chambers,[1] emulsions,[2] and counters.[3] In this paper we report an experiment on K^+-p elastic scattering at higher momenta, using spark chambers to measure $\frac{d\sigma}{d\Omega}$ at angles greater than about 10 deg (lab) and counters for the small-angle scattering. The characteristics of spark chambers that provide a crucial advantage over other devices for this type of experiment are: (a) time resolution (about 500 nsec) which makes possible the use of electronically separated beams, rather than the spatially separated beams needed for bubble chambers; and (b) spatial resolution enabling the measurement of angles with an accuracy of about 1/2 deg, and a fairly large accepted solid angle—a combination which is very difficult to achieve with counters alone.

2. EXPERIMENTAL METHOD AND RESULTS

The variable-momentum K-particle beam was selected by using two high-pressure gas Cerenkov counters and time-of-flight, in a secondary beam from the Bevatron.

---

† Work done under the auspices of the U. S. Atomic Energy Commission.

‡‡ Permanent address: Rutherford High Energy Laboratory, Harwell, England.

Scattered particles were detected either by the hodoscope or the spark-chamber system. The arrangement of the scattering detector systems is shown in Fig. 1.

The hodoscope system consisted of a bending magnet and gas Cerenkov counter to measure simultaneously the momentum and velocity of the scattered K meson. For scattering angles greater than $\theta_K^{lab} \approx 10$ deg the recoil proton can escape from the liquid-hydrogen target and be detected. These events were recorded by triggering three spark chambers placed around the target. The chambers had rectangular thin foil plates and were filled with argon.

Elastic scatters were selected on the basis of coplanarity and the polar scattering angles of the two particles. About 1500 events were found at each of the three momenta. The differential cross sections are shown in Fig. 2.

3. DISCUSSION

a. Phase-Shift Analysis

Elastic K^+-p angular distributions have been measured previously up to 810 MeV/c, and all are consistent with pure S-wave scattering. In addition to an S-wave solution, Stubbs et al.,[1] also found satisfactory fits at 810 MeV/c with dominant $P_{1/2}$ and with a mixture of $P_{1/2}$ and $P_{3/2}$ amplitudes.

Our angular distributions show a deviation from isotropy that increases with energy. At 970 MeV/c, the inelastic cross section is one-third of the total, as compared with one-tenth of the total at 810 MeV/c (see Fig. 3).

A phase-shift analysis including $S_{1/2}$, $P_{1/2}$, and $P_{3/2}$ amplitudes was made for the 970- and 1170-MeV/c data. The situation is more complicated than at 810 MeV/c, because of the large inelastic cross section which requires that all phase shifts be treated as complex quantities. The number of satisfactory solutions is accordingly larger. Some representative solutions are given in Table I.

In spite of the multiplicity of phase-shift solutions that were found, we can made the following general observations:

(a) The S-wave contribution to the elastic scattering is decreasing rapidly at 1 BeV/c.

(b) Although the various solutions predict quite different values for the phase shifts, they lead to a more or less stable estimate of the magnitude of the real part of the forward scattering amplitude. The data at both momenta favor constructive nuclear-Coulomb interference.

At 1970 MeV/c the angular distribution shows a pronounced diffraction peak upon a small almost isotropic distribution of about 0.05 mb/sr.

b. Forward Scattering Dispersion Relations.

Using the new data reported here we have examined the forward scattering K-p dispersion relations to see: (a) how well all the existing information can be described by these relations; and (b) how well the sign and magnitude of the effective pole term (including Λ, Σ, Y_1^*, and, possibly, Y_0^* poles) can now be estimated.

Table I. Phase-shift solutions found at 0.97 BeV/c and 1.17 BeV/c.

	δ_0	η_0	δ_1^-	η_1^-	δ_1^+	η_1^+	$D(f)$	$P(\chi^2)$
0.97 BeV/c								
A^-	−38±1	1.0	−10±1	1.0	3±4	0.6	−0.10±0.03	0.14
A^+	39±1	1.0	−16±1	0.9	1±3	0.7	+0.09±0.03	0.07
B^-	30±1	0.4	−38±2	0.8	−4±2	1.0	−0.12±0.04	0.15
B^+	−32±1	0.5	39±3	0.7	5±2	1.0	+0.12±0.04	0.07
C^-	9±1	0.7	15±7	1.0	−29±2	0.8	−0.12±0.04	0.13
C^+	−14±1	0.7	−14±7	1.0	29±2	0.8	+0.10±0.03	0.06
D^-	3±1	0.8	−43±3	0.9	7±9	0.8	−0.10±0.03	0.11
E^-	−20±9	1.0	39±9	0.7	−10±1	0.8	−0.10±0.03	0.12
1.17 BeV/c								
A^-	−33±2	1.0	−10±19	0.8	4±1	0.2	−0.19±0.09	0.22
A^+	43±2	0.8	5±1	0.6	−9±5	0.4	+0.08±0.08	0.07
B^-	74±1	0.2	−30±9	0.6	−14±3	0.8	−0.19±0.09	0.21
C^-	−3±1	0.2	−64±14	0.3	−15±1	0.9	−0.20±0.09	0.22
C^+	12±5	0.2	55±10	0.6	11±2	0.8	+0.22±0.10	0.08
D^-	−9±1	0.3	1±5	1.0	−39±1	0.5	−0.18±0.10	0.21
D^+	13±1	0.4	−1±9	1.0	43±2	0.4	0.17±0.10	0.10

Our approach has been to try to fit all of the available K^+-p and K^--p data by using a singly subtracted dispersion relation

$$D(\omega) - D(\omega_o) = \Gamma\left(\frac{1}{\bar{\omega} + \omega} - \frac{1}{\omega + \omega_o}\right) + f(\omega) - f(\omega_o) \quad ,$$

which we write in the form

$$y = \Gamma\,(x - x_o) + D(\omega_o) \quad ,$$

where

$$x = \frac{1}{\bar{\omega} + \omega} \quad .$$

The parameter ω_o can be chosen arbitrarily; we have taken $\omega_o = +1.0$. The integrals $f(\omega)$ were evaluated up to $\omega = 40\ m_K$ by numerical integration, and beyond this energy by using the asymptotic expressions of Udgaonkar.[4] Thus, the slope of a linear fit to the measured values of $D(\omega)$ determines the pole residue Γ, and the intercept at $x = x_o$ determines the value of $D(\omega_o)$.

Using available values for $D(\omega)$, we find

$$\left.\begin{aligned} \Gamma &= -0.12 \pm 0.32 \\ D(\omega_o) &= -0.9 \pm 0.2_{(m_K)^{-1}} \end{aligned}\right\} \qquad P(\chi^2) = 0.70 \quad .$$

Although $D(\omega)$ for K^+ has been reasonably well determined at several energies, the data on $D(\omega)$ for K^- is still too meager to permit a satisfactory test of the forward scattering dispersion relations for K mesons.

REFERENCES

1. T. F. Stubbs, H. Bradner, W. Chinowsky, G. Goldhaber, S. Goldhaber, W. Salter, D. M. Stork, and H. K. Ticho, Phys. Rev. Letters 7, 188 (1961).
2. D. Keefe, A. Kernan, A. Montwill, M. Grilli, L. Guerriero, and G. A. Salandin, Nuovo cimento 12, 241 (1959).
3. T. F. Kycia, L. T. Kerth, and R. G. Baender, Phys. Rev. 118, 553 (1960).
4. B. M. Udgaonkar, Phys. Rev. Letters 8, 142 (1962).

FIGURE CAPTIONS

Fig. 1. Arrangement of scattering detector apparatus.

Fig. 2. Measured angular distributions. The curves on the 970- and 1170-MeV/c data were calculated for some of the sets of phase-shift solutions given in Table I.

Fig. 3. The K^+-p total, elastic, and inelastic cross sections in the momentum range p^{lab} = 0 to 2 BeV/c. The curves through the measured cross sections have no theoretical significance.

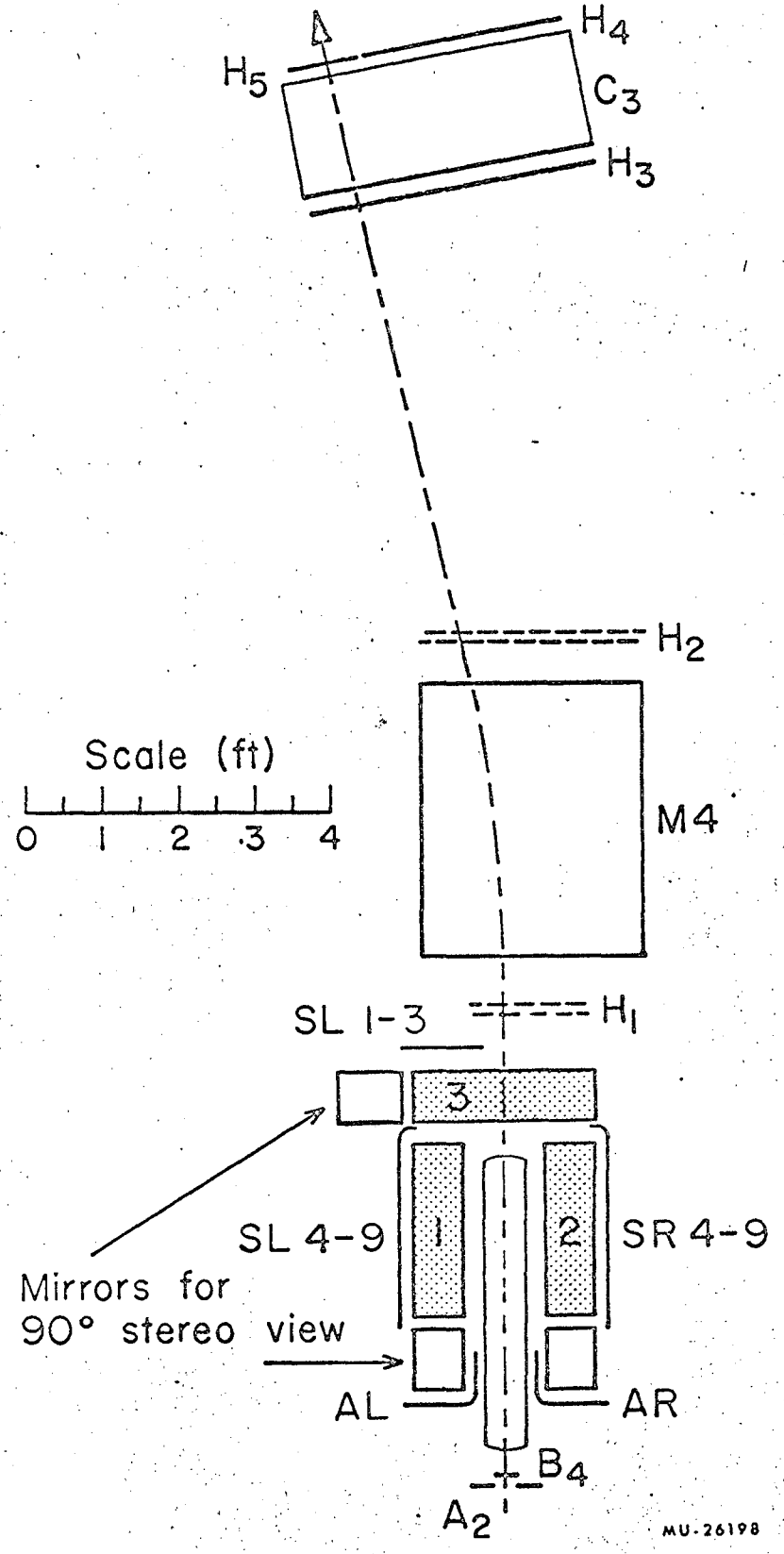
H4
H5
C3
H3
H2
Scale (ft)
0 1 2 3 4
M4
SL 1-3
H1
3
SL 4-9
1
2
SR 4-9
Mirrors for
90° stereo view
AL
AR
B4
A2
MU-26198

Fig. 1

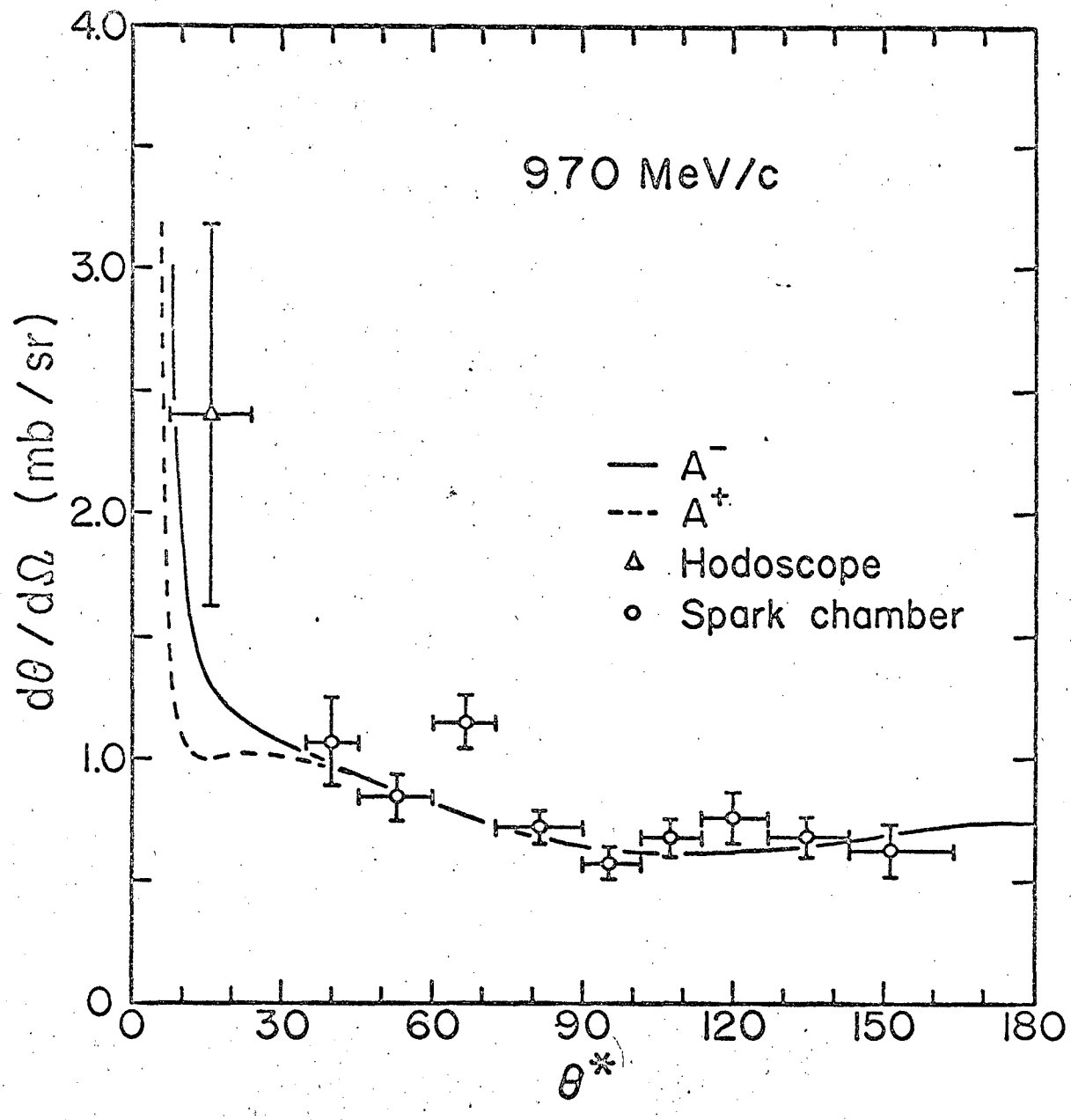

MU-26271
Fig. 2a

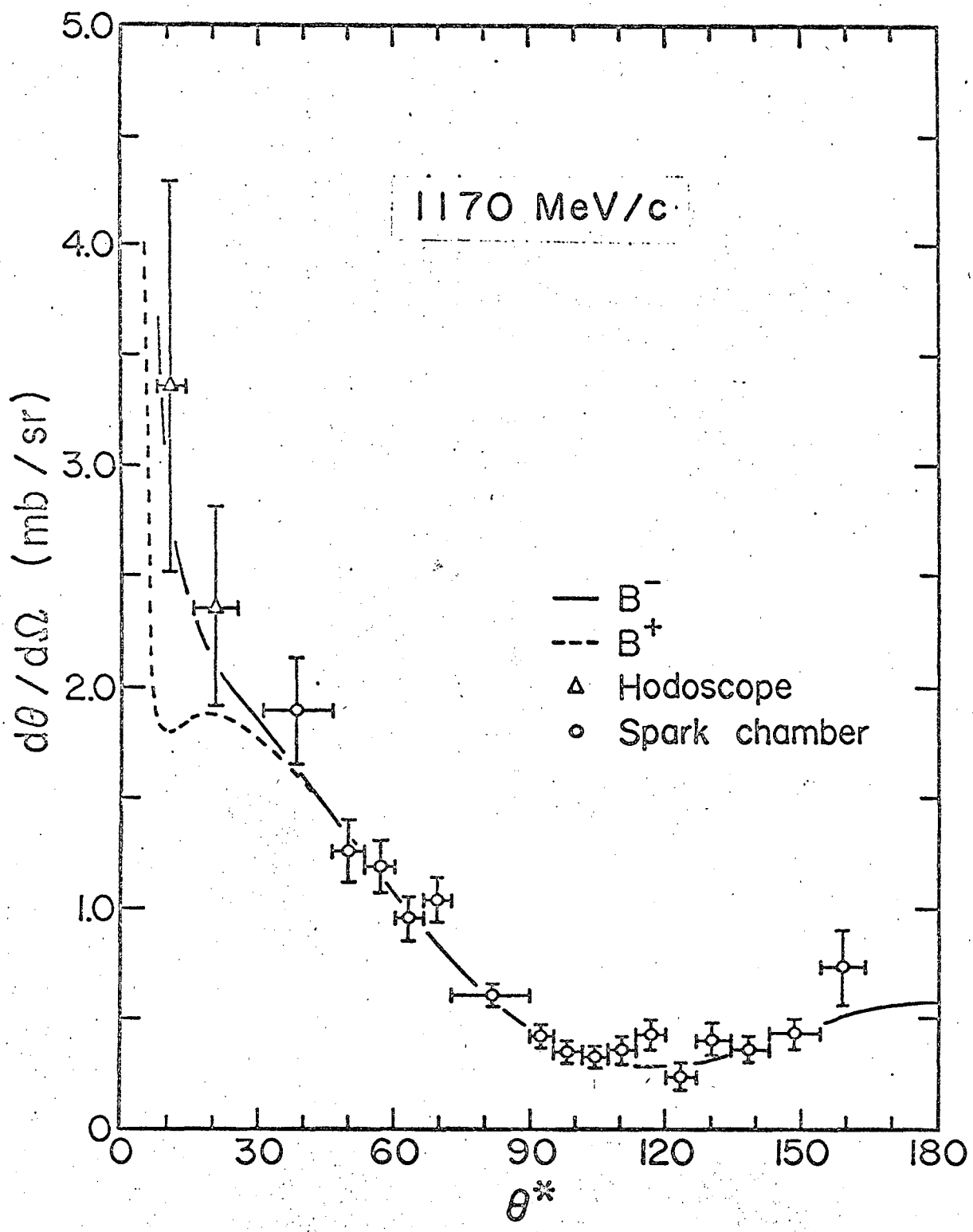

MU-26272
Fig. 2c

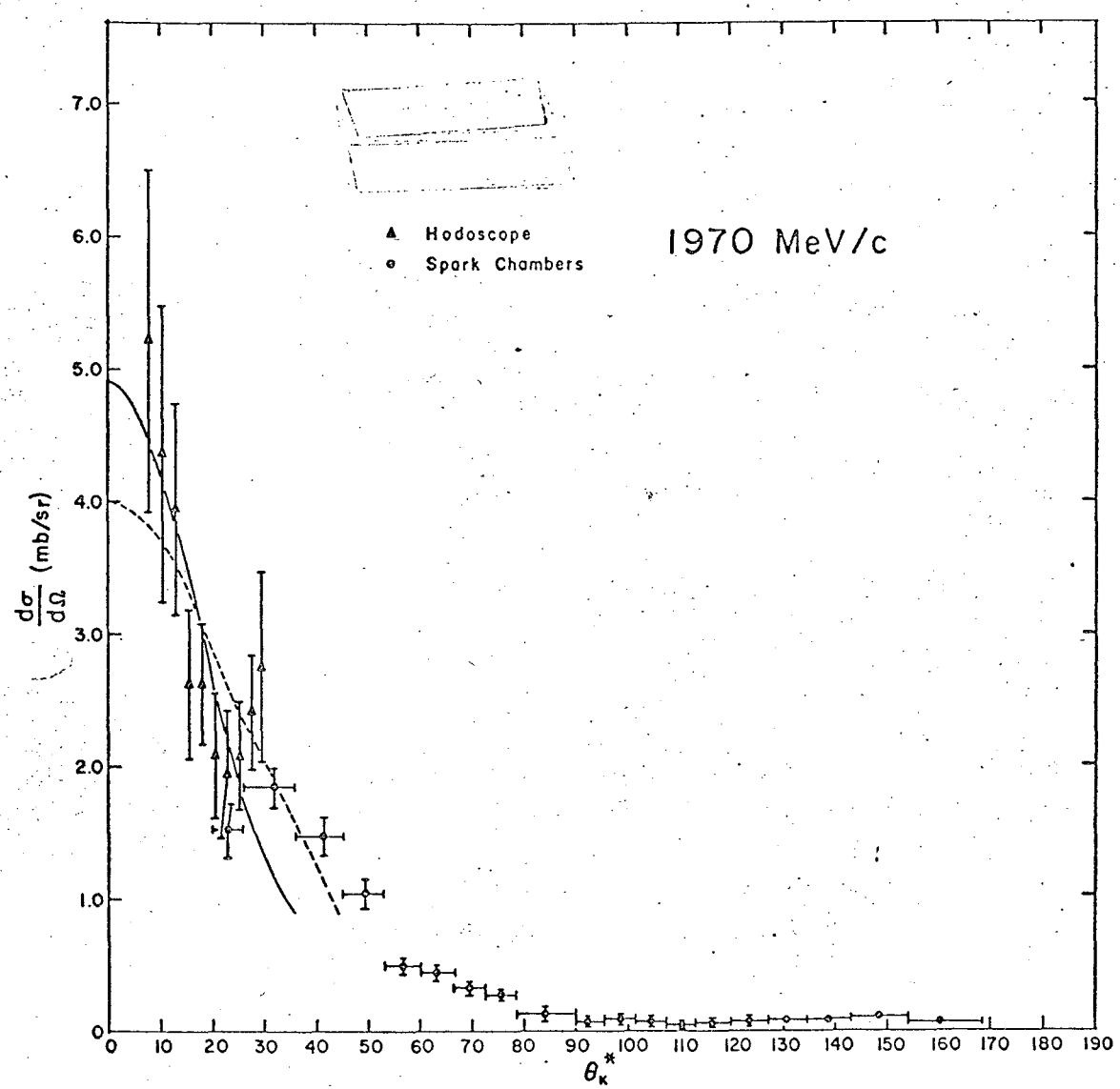

MUB-1040

Fig. 2b

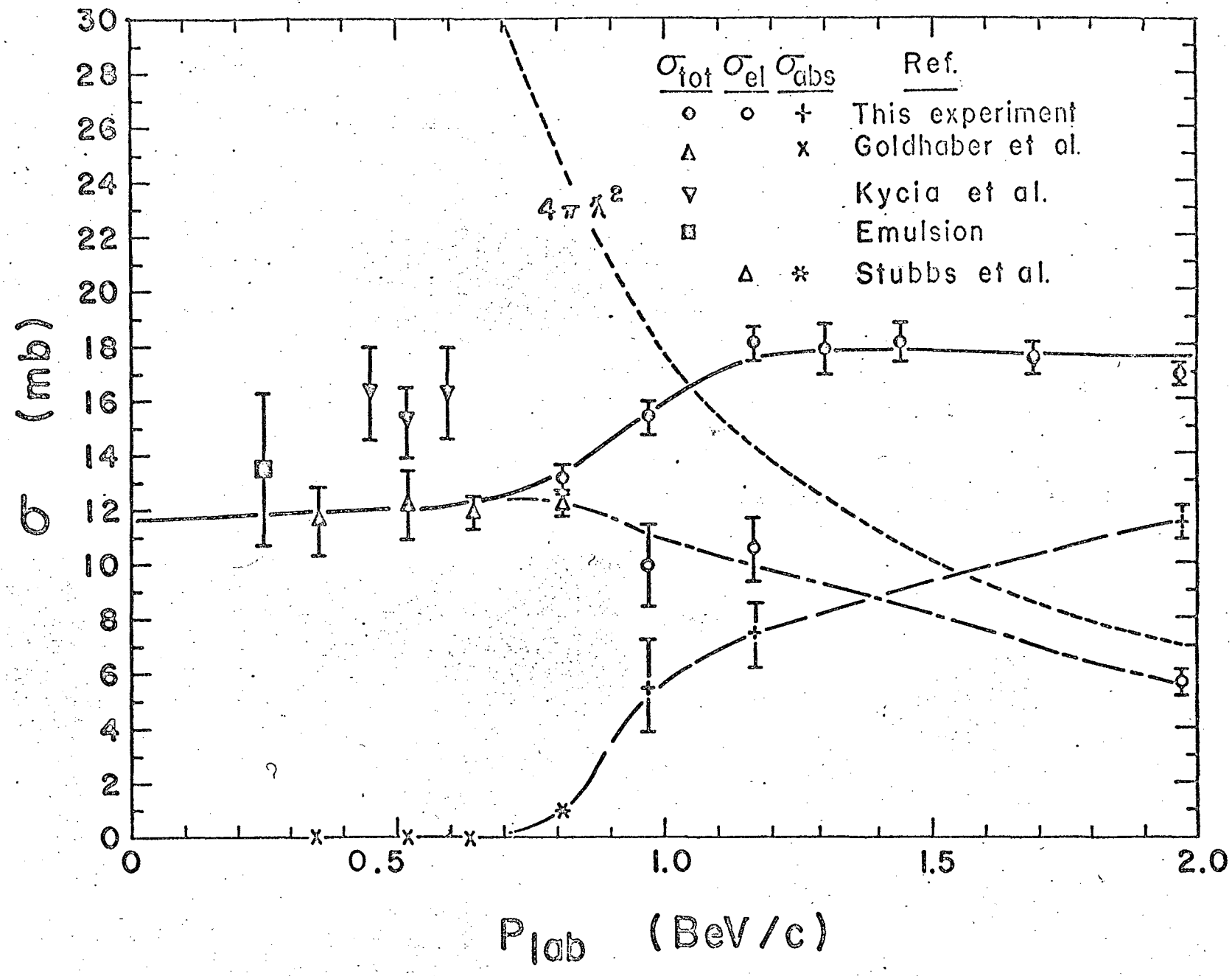

MU-26542
Fig. 3