University of California

Ernest O. Lawrence Radiation Laboratory

TWO-WEEK LOAN COPY

This is a Library Circulating Copy which may be borrowed for two weeks. For a personal retention copy, call Tech. Info. Division, Ext. 5545

Berkeley, California

DISCLAIMER

This document was prepared as an account of work sponsored by the United States Government. While this document is believed to contain correct information, neither the United States Government nor any agency thereof, nor the Regents of the University of California, nor any of their employees, makes any warranty, express or implied, or assumes any legal responsibility for the accuracy, completeness, or usefulness of any information, apparatus, product, or process disclosed, or represents that its use would not infringe privately owned rights. Reference herein to any specific commercial product, process, or service by its trade name, trademark, manufacturer, or otherwise, does not necessarily constitute or imply its endorsement, recommendation, or favoring by the United States Government or any agency thereof, or the Regents of the University of California. The views and opinions of authors expressed herein do not necessarily state or reflect those of the United States Government or any agency thereof or the Regents of the University of California.

UCRL-10269

UNIVERSITY OF CALIFORNIA

Lawrence Radiation Laboratory
Berkeley, California

Contract No. W-7405-eng-48

PRODUCTION OF A HOT ROTATING PLASMA

Klaus Halbach, William R. Baker, and
Robert W. Layman

May 29, 1962

PRODUCTION OF A HOT ROTATING PLASMA*

Klaus Halbach, William R. Baker, and
Robert W. Layman

Lawrence Radiation Laboratory
University of California
Berkeley, California

May 29, 1962

Since 1958, when the first papers on the thermonuclear aspect of rotating plasmaswere published,[1,2,3] considerable efforts have been made to understand the reason for a drift-velocity (or voltage) limit encountered experimentally.[4,5] We were interested in this velocity limit only to the extent necessary to enable us to build and operate a machine that would not show this effect. Our impression that the ultimate velocity limitation was caused by the contact between the plasma and insulators led to the construction of Homopolar V, shown schematically in Fig. 1. The main difference between this design and other similar coaxial electrode structures is the use of a fast-acting valve in the center of the machine, which typically releases 30 to 50 μliters D_2 into the evacuated apparatus (base pressure below 10^{-7} mm Hg) at the time of maximum magnetic field. Since the time between the opening of the valve and the onset of the main discharge current is only of the order of 100 μsec, there can be no gas near the insulators at that time, and consequently we have not yet encountered a velocity limit that could not be surpassed by increasing the electric and magnetic field. The highest drift velocity measured so far has been 6×10^7 cm/sec, corresponding to 4 kev ion energy.

Figure 2 shows typical current and voltage traces. From the thermonuclear point of view, the most important feature of the voltage trace is that due to the low-impedance supply circuit, the voltage does not decrease appreciably during

the main ionizing discharge. This means that the randomized Larmor energy of the ions in the drift frame at the time the plasma is created must be nearly the same as the organized rotational energy of the ions at that time, provided that the measured voltage [illegible] does not appear mainly across a thin plasma sheath. It seems, however, that this latter possibility can be ruled out, because (a) both "crowbar" (shorting) experiments and experiments with an inductance in series with the driving capacitor show that the machine reacts like a well-behaved hydromagnetic capacitor[1] and that the angular momentum imparted to the plasma by the radial current can be recovered; (b) the charge going through the machine during the ionization and acceleration phase agrees with the charge calculated from the applied voltage and the equivalent capacity of the hydromagnetic system if it is assumed that the whole plasma participates in the rotation.

The sudden drop of the voltage across the machine to less than 100 volts after 17 μsec (Fig. 2) is most likely due to an internal short. We believe, that, owing to the heating of the electrons by the ions and the extremely fast thermalization among electrons, electrons escape through the mirrors and establish conductivity between the electrodes along magnetic field lines. The large current that follows this drop of the voltage is the discharge current of the external capacitor into this short circuit. The loss of rotation due to this crowbar does not, however, mean that we lose the plasma at this time. Microwave transmission experiments show that the electron density is higher than 10^{13} cm^{-3} until the magnetic field drops to 2 to 5 kG, which occurs, depending on the magnetic field configuration, 5 to 9 msec after the discharge took place. It should be noted that the randomized ion energy in the drift frame should not be altered directly by this internal or an external crowbar.

The findings described above indicate that we are dealing with a D plasma of 1 to 4 keV randomized ion energy at a density of 10^{14} to 10^{15} ions/cm^3. We therefore investigated the neutron production of this plasma with LiI, Hornyak, and plastic scintillators in conjunction with photomultipliers. The results of these experiments are the following: (a) There is no detectable neutron production before the onset of the main discharge. (b) The total neutron production, which has a maximum value of the order of 10^5 neutrons per shot, is not affected when the machine is crowbarred externally after the main discharge current ceases to flow. (c) Preliminary time-resolved neutron studies show that neutrons are produced for at least 20 μsec after the main discharge current drops to low values, whether or not an external crowbar is applied after that time.

To make a direct measurement of the ion velocities, we used two detectors that could detect the fast neutrals resulting from charge exchange between slow neutrals and fast ions. They consisted of a secondary electron emitter and a properly biased electron collector. One was mounted close to the outer electrode, the other at a distance of 60 cm, the connecting line intersecting the outer electrode at an angle of 45 degrees. The detector close to the outer electrode yielded a pulse that started with the onset of the discharge current and disappeared shortly after the current reached its maximum value. The fact that no neutrals were detected after that time indicates that the plasma is highly ionized as long as there are high-energy ions in the plasma. The second detector showed a signal that was spread in time somewhat and had a time-of-flight delay that indicated a maximum velocity that was in agreement with twice the drift velocity at the outer electrode as calculated from the electrical data.

Although it is clear that further exploration is required, our experiments with Homopolar V to date show, in summary, that (a) rotating plasmas need not suffer from a serious velocity limit, at least at early times, and (b) the discharge seems capable of producing a dense plasma with ion energies of thermonuclear interest, at least transiently.

ACKNOWLEDGMENTS

We would like to thank Dr. Alex Bratenahl and Didier Véron for their contributions during the very early phases of this project and G. Donald Paxson for his able assistance in the experimental work.

FOOTNOTES AND REFERENCES

* Work done under the auspices of the U. S. Atomic Energy Commission.

1. O. A. Anderson, W. R. Baker, A. Bratenahl, H. P. Furth, J. Ise, Jr., W. B. Kunkel, and J. M. Stone, in Proceedings of the Second United Nations International Conference on the Peaceful Uses of Atomic Energy, 1958 (United Nations, Geneva, 1958) 32, p. 155; see also, O. A. Anderson, W. R. Baker, A. Bratenahl, H. P. Furth, and W. B. Kunkel, J. Appl. Phys. 30, 188 (1959).
2. K. Boyer, J. E. Hammel, C. L. Longmire, D. Nagle, F. L. Ribe, and W. B. Riesenfeld, in Proceedings of the Second United Nations International Conference on the Peaceful Uses of Atomic Energy, 1958 (United Nations, Geneva, 1958) 31, p. 319; see also, C. L. Longmire, D. E. Nagle, and F. L. Ribe, Phys. Rev. 114, 1187 (1959).
3. B. Bonnevier and B. Lehnert, Arkiv Fysik 16, 231 (1959).
4. H. Alfvén, Revs. Modern Phys. 32, 710 (1960); see also Ulf V. Fahleson, Phys. Fluids 4, 123 (1961).
5. D. A. Baker and J. E. Hammel, Phys. Fluids 4, 1549 (1961).

FIGURE CAPTIONS

Fig. 1. Schematic diagram of Homopolar V device.

Fig. 2. Oscilloscope trace of Homopolar V current and voltage.

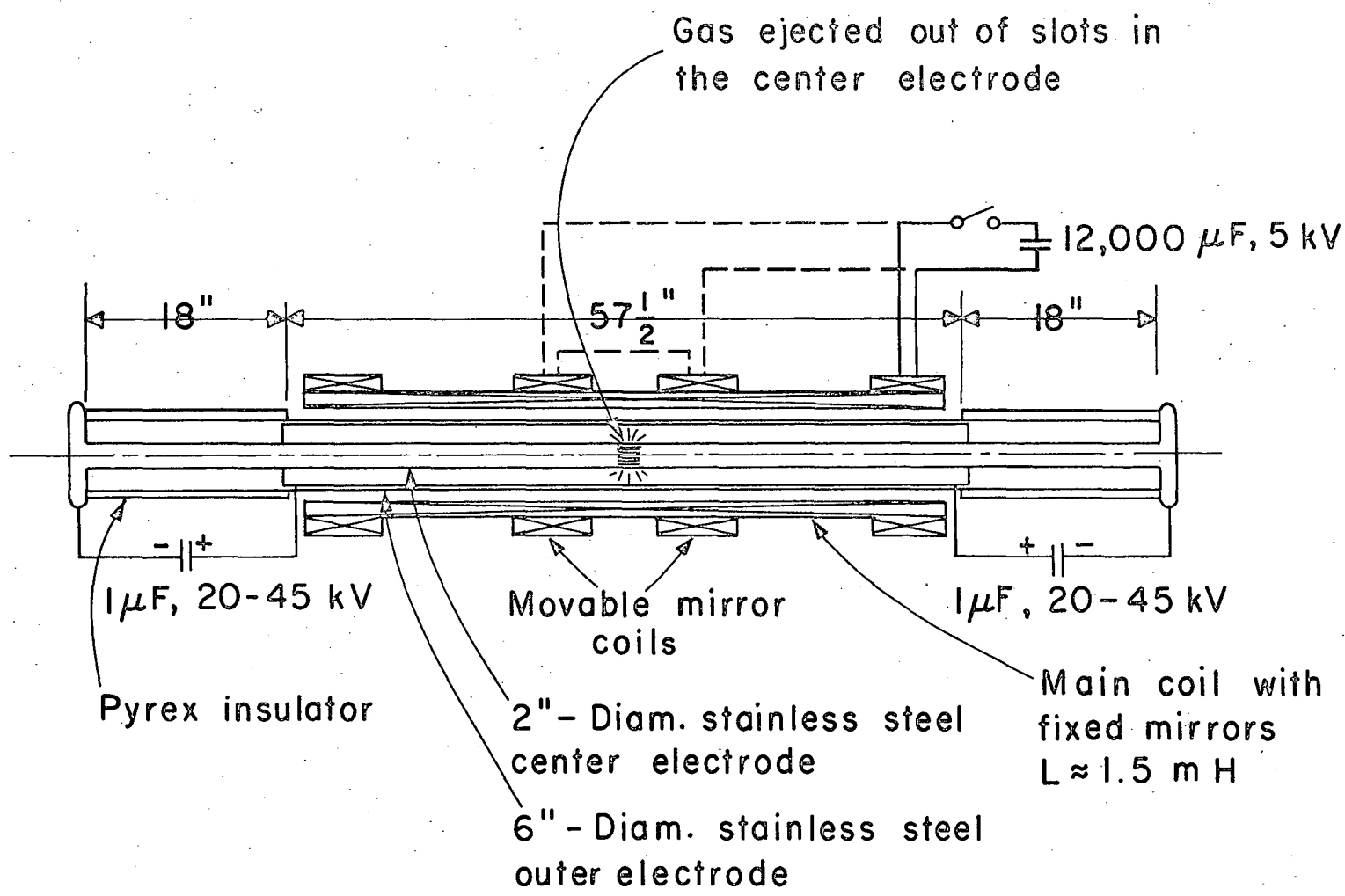
Gas ejected out of slots in the center electrode
12,000 μF, 5 kV
18"
57 1/2"
18"
1μF, 20-45 kV
Movable mirror coils
1μF, 20-45 kV
Pyrex insulator
2"- Diam. stainless steel center electrode
Main coil with fixed mirrors L ≈ 1.5 mH
6"- Diam. stainless steel outer electrode

MU-26970

21.7 kV/div

13 kA/div

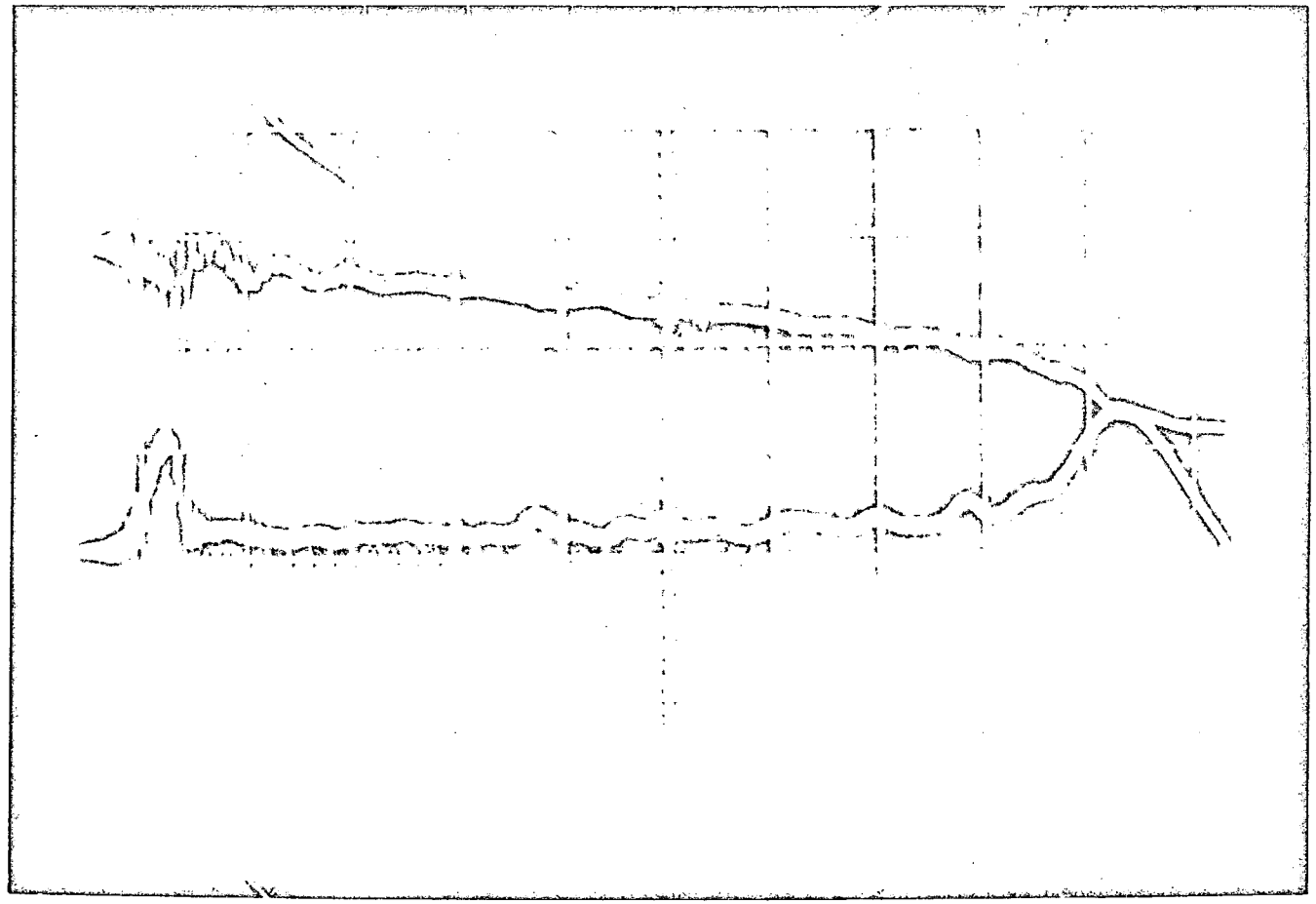

2 μ sec / div

MU-26952