UCRL-10333

University of California

Ernest O. Lawrence Radiation Laboratory

FOUR LEAD ELECTRICAL RESISTANCE MEASUREMENTS IN BRIDGMAN ANVILS

TWO-WEEK LOAN COPY

This is a Library Circulating Copy which may be borrowed for two weeks. For a personal retention copy, call Tech. Info. Division, Ext. 5545

Berkeley, California

DISCLAIMER

This document was prepared as an account of work sponsored by the United States Government. While this document is believed to contain correct information, neither the United States Government nor any agency thereof, nor the Regents of the University of California, nor any of their employees, makes any warranty, express or implied, or assumes any legal responsibility for the accuracy, completeness, or usefulness of any information, apparatus, product, or process disclosed, or represents that its use would not infringe privately owned rights. Reference herein to any specific commercial product, process, or service by its trade name, trademark, manufacturer, or otherwise, does not necessarily constitute or imply its endorsement, recommendation, or favoring by the United States Government or any agency thereof, or the Regents of the University of California. The views and opinions of authors expressed herein do not necessarily state or reflect those of the United States Government or any agency thereof or the Regents of the University of California.

Submitted for publication to Science

UCRL-10333

FOUR LEAD ELECTRICAL RESISTANCE MEASUREMENTS IN BRIDGMAN ANVILS

Harold Stromberg and George Jura

Department of Chemistry and Inorganic Materials Division
of Lawrence Radiation Laboratory
University of California, Berkeley, California

Abstract

A geometry is described which permits four lead electrical determinations of the pressure coefficient of resistance of metals in Bridgman anvils. It is also possible in this geometry to mount more than one sample and to make independent measurements on each sample simultaneously.

When Bridgman[1] developed the anvils for the determination of electrical resistance measurements, he found it essential to run all of the necessary leads through the anvil faces. This introduced an unknown contact resistance for which no exact correction could be made. In most systems, however, the contact resistance was negligibly small compared to the total resistance. Bridgman made several attempts to run leads through the sides of the pyrophylite ring directly into the sample, but the leads were pinched off at such a low pressure that this technique was discarded.

The apparent reason for the pinching was the very large pressure gradient that exists in the gasket. In an earlier paper[2] by the present authors it was

1. P.W. Bridgman, Proc. Amer. Acad. Arts and Sci., 81, 165, (1952).

2. P.W. Montgomery, H. Stromberg, S. H. Jura and G. Jura, in Press

shown that in the 1/32 in. wide pyrophylite ring, that the pressure gradient in the gasket went from a few kilobars at the outside edge to a pressure roughly 20% higher than the average applied load in 0.025 in. This pressure gradient is above the shear strength of any wire, and consequently breakage by shear occurred. We have found that by increasing the width of the ring to 3/32 in., and increasing the thickness of the ring from 0.010 to 0.020 in., that it is possible to insert electrical leads through the ring without introducing sufficient shear to cut the wire to an applied average load of about 200 kilobars. The ring design has also been found to change the pressure-load relationships due to the increased gasket width. Also, because of the increased thickness of the silver chloride, it is possible to mount more than one sample in the same cavity, and make independent measurements on each.

Figure 1 shows in a schematic manner the method of mounting a single sample. The two silver chloride discs, A, are punched from prerolled sheet, of carefully controlled thickness, to a diameter 0.010 in. less than the internal diameter of the pyrophylite ring. Gold electrical contacts, B, are inserted in 0.020 in. holes drilled near the edge of the rings. These plugs are such a thickness that contact is made between the anvils and the wire M, when the assembly is under load. The wire M is usually 0.003 in. in diameter and is bent in a circular arc, flattened at the ends to about .002 in. and mounted concentric to the center of the anvil face, which insures minimum pressure gradient in the sample. The ends of the lead wires, L, are also flattened at the ends where contact is made with the sample wire in order to reduce tendency to pinch at the contact point. In order to facilitate mounting of the lead wires the containing pyrophlite gasket is made in two sections, 0.010 in. thick and 3/32 in. wide. On final assembly one gasket is placed on the anvil face, next the silver

chloride assembly containing the sample and lead wires is placed within this ring, and then the second ring is placed over the leads. The top and side views of a completed setup are shown in Fig. 2. The dimensions given are for 1/2 diameter anvil faces. For smaller anvil diameters same gasket thickness and sample clearances are used.

It is relatively easy to mount two separate samples in the same capsule by using three thinner silver chloride discs with an appropriate gold plug in the center disc to connect the two sample wires in series. To obtain more accurate voltage drop data across each sample, separate leads are used. This requires that four leads pass through the gasket for a double sample test. Several times we have attempted to mount 3 separate samples in the same capsule, but we have not as yet been able to make a successful run due to the complexity of the assembly. An electrical short or breaking of the circuit occurred each time within the silver chloride cell.

It was found that metals with high modulus of elasticity such as tungsten, molybedenum and platinum make the most successful lead through wires. 0.005 in. diameter wires did not undergo shear failure. Platinum is the most desirable since it can be easily soldered, however, it has the disadvantage of lower shear strength than either tungsten or molybedenum and it fails at about 125 kilobars. Tungsten has the disadvantage of end fraying during the flattening process. Mechanically molybedenum is superior and has been used for most of our tests despite its poor soldering qualities. A crimping procedure has been developed for connecting external lead wires to molybedenum and tungsten, which introduces relatively small contact errors. Both of these metals will successfully resist shear breakage to pressures of 200 kilobars.

Electrical resistance measurements of the samples are made by passing a constant current through the entire sample stack connected in series. Current connections are made through the anvil faces. The IR drop is measured across the individual samples with separate leads that pass through the split pyrophylite rings. Ohms' Law is then used to compute the resistance of the sample. Pressures are determined with a strain gage instrumented steel load cell in conjunction with a SR 4 bridge manufactured by Baldwin Lima Hamilton Corporation.

Figure three shows a typical determination using this technique. This was a two sample assembly one bismuth, the other manganin. The bismuth 1-2 and 6-8 transitions are used as an internal pressure calibration. The SR 4 readings have been converted to pressures on the assumption that the 1-2 transition occurs at 25.5 kilobars, and that the pressure is proportional to the load. There is some evidence that this latter assumption is not valid until pressures of about 30 to 35 kilobars are reached.

Due to the use of a wider gasket giving a higher gasket to silver chloride area ratio, the effective area of the anvil over which the load is distributed is greatly decreased. With the standard rings as used by Bridgman, the load required to attain the same pressures in 1/2 in. faces is about 30% greater than the required using this technique. In the 1/4 in. face anvils, the load required to attain a given pressure is roughly 1/4 of the calculated required load. In this case the bismuth 1-2 transition occurs at an indicated load of between 6 and 7 kilobars.

FIGURE LEGENDS

Fig. 1. Schematic sketch of setup using leads through gasket.

Fig. 2. Top and side views of assembly for multilead measurements.

Fig. 3. Resistances of bismuth and manganin as determined simultaneously and independently using four lead measurements.

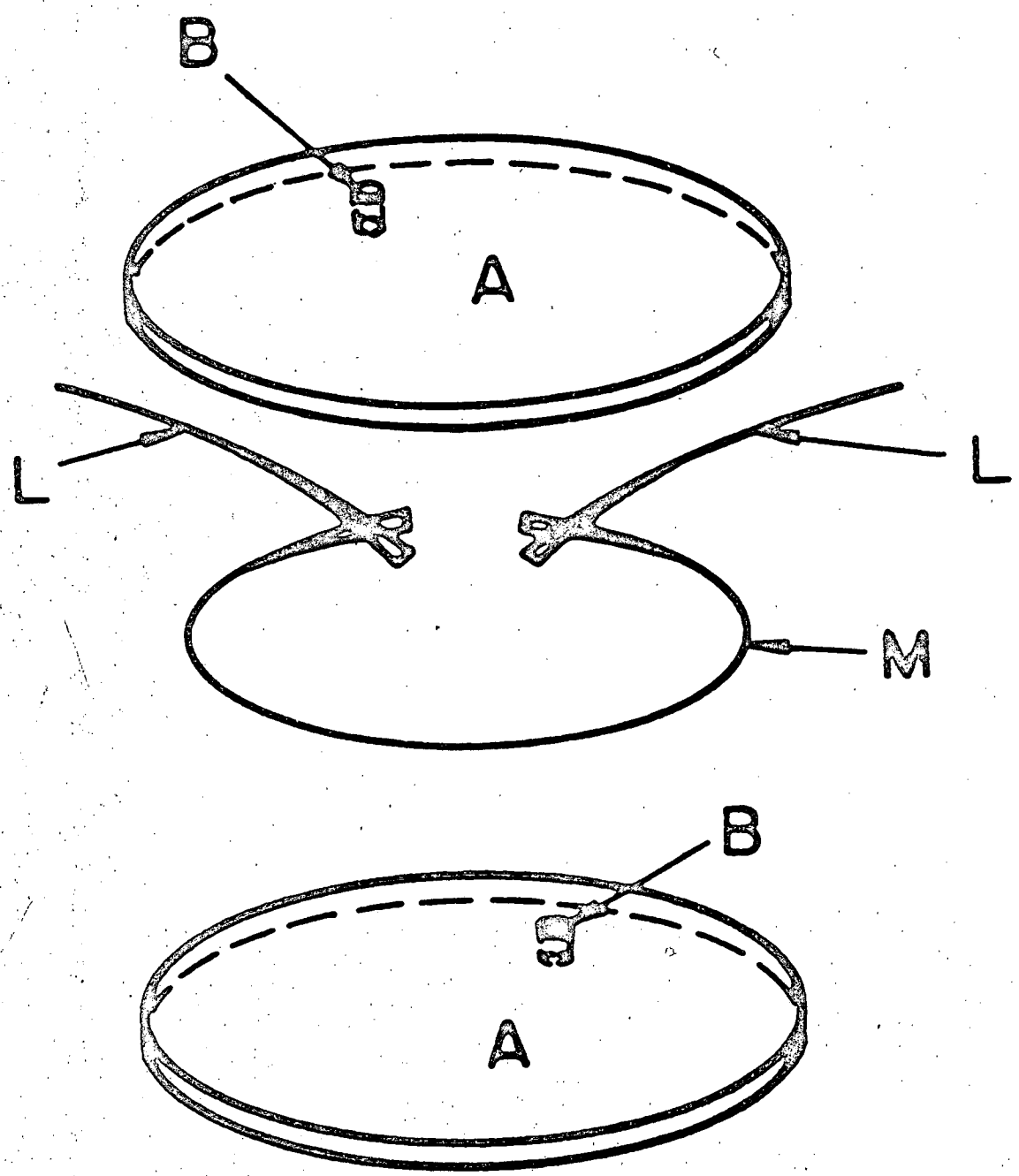

Fig. 1

MU-27498

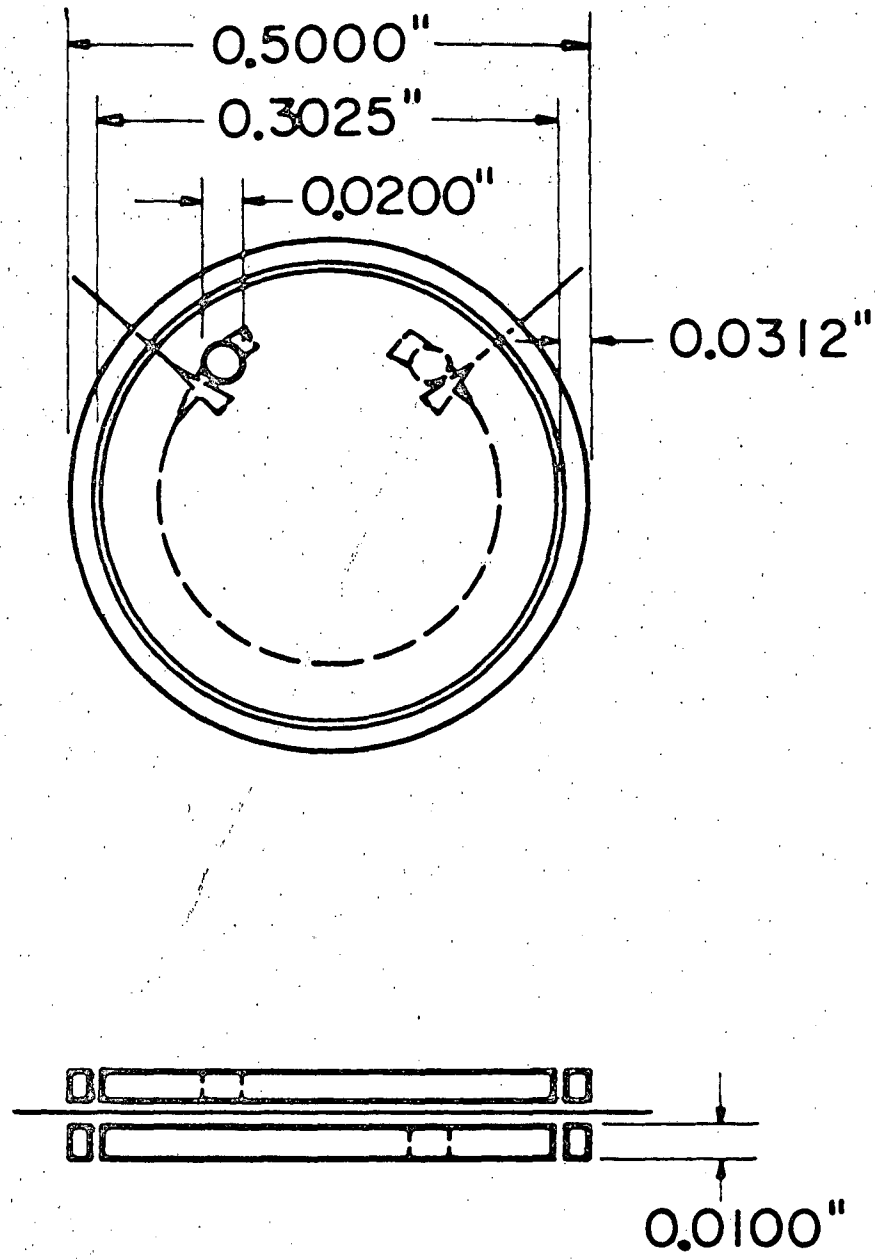

Fig. 2

MU-27497

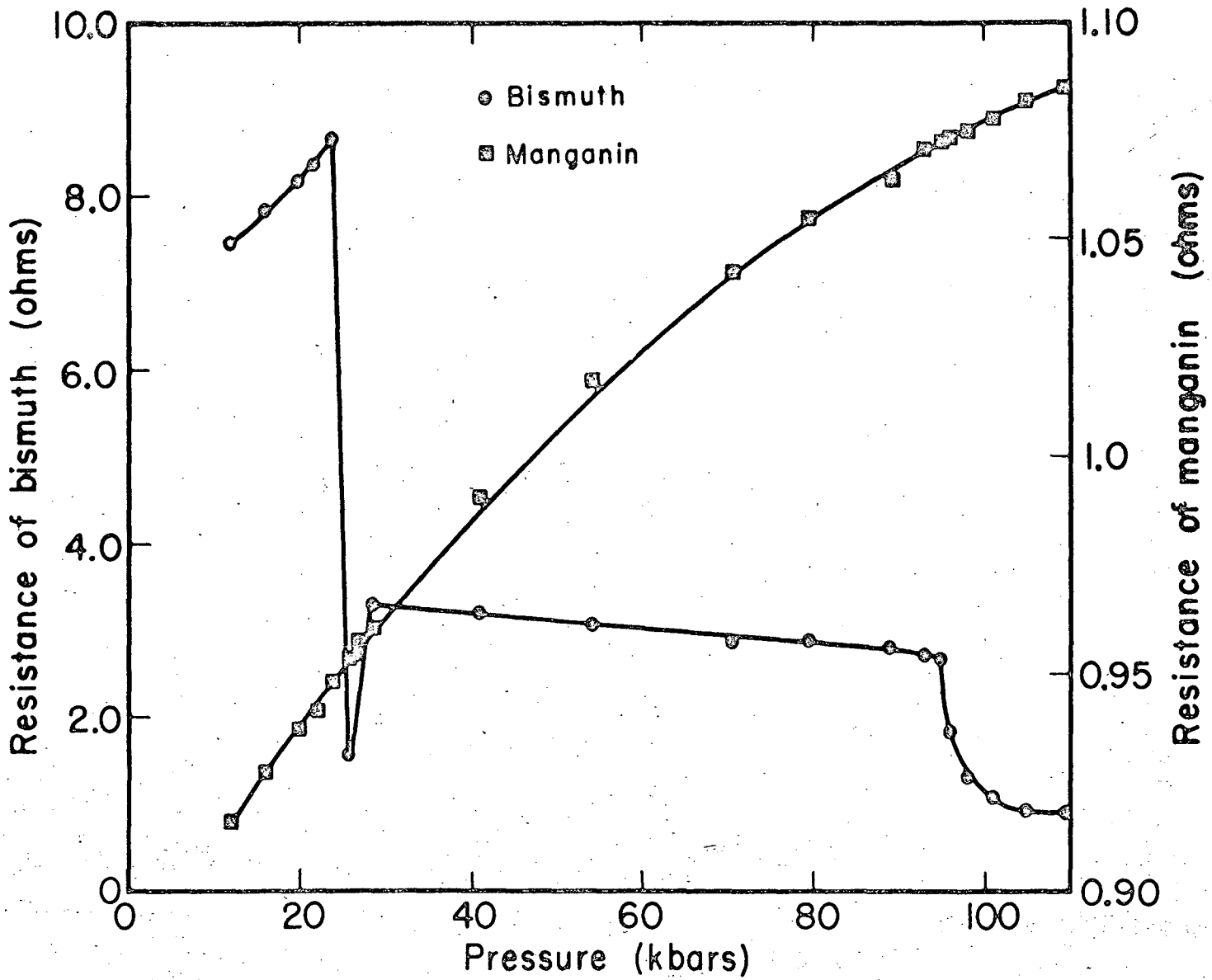

Fig. 3

MU-27499