UCRL-10385

University of California

Ernest O. Lawrence Radiation Laboratory

TWO-WEEK LOAN COPY

This is a Library Circulating Copy which may be borrowed for two weeks. For a personal retention copy, call Tech. Info. Division, Ext. 5545

Berkeley, California

DISCLAIMER

This document was prepared as an account of work sponsored by the United States Government. While this document is believed to contain correct information, neither the United States Government nor any agency thereof, nor the Regents of the University of California, nor any of their employees, makes any warranty, express or implied, or assumes any legal responsibility for the accuracy, completeness, or usefulness of any information, apparatus, product, or process disclosed, or represents that its use would not infringe privately owned rights. Reference herein to any specific commercial product, process, or service by its trade name, trademark, manufacturer, or otherwise, does not necessarily constitute or imply its endorsement, recommendation, or favoring by the United States Government or any agency thereof, or the Regents of the University of California. The views and opinions of authors expressed herein do not necessarily state or reflect those of the United States Government or any agency thereof or the Regents of the University of California.

Submitted to Nuclear Instruments and Methods

UCRL-10385

UNIVERSITY OF CALIFORNIA

Lawrence Radiation Laboratory
Berkeley, California

Contract No. W-7405-eng-48

HIGH-INTENSITY NEGATIVE ION SOURCES

Kenneth W. Ehlers, Basil F. Gavin, and Edward L. Hubbard

July 26, 1962

HIGH-INTENSITY NEGATIVE ION SOURCES

Kenneth W. Ehlers, Basil F. Gavin, and Edward L. Hubbard

Lawrence Radiation Laboratory
University of California
Berkeley, California

July 26, 1962

ABSTRACT

The production of beams of negative deuterium ions has been studied with two ion sources with geometries that could be employed in a cyclotron. The negative ions were extracted directly from the arc in a direction normal to the magnetic field without using a charge-exchange medium. With a high gas pressure in the arc and an arc current of 5 A, a 2-mA beam of D^- ions was obtained.

HIGH-INTENSITY NEGATIVE ION SOURCES*

Kenneth W. Ehlers, Basil F. Gavin, and Edward L. Hubbard

Lawrence Radiation Laboratory
University of California
Berkeley, California

July 26, 1962

I. INTRODUCTION

Recently, a beam of protons was extracted from the University of Colorado cyclotron by accelerating negative hydrogen ions to full energy and then stripping the electrons from these ions to produce positive ions.[1] The simplicity of this method, compared to other methods of extracting the beam from a cyclotron, has created interest in sources of negative ions that are suitable for use in cyclotrons.

In the ion sources that have been developed for tandem Van de Graaff accelerators,[2,3] positive ions are extracted from a conventional ion source with an energy of about 10 keV. A beam of negative ions is then produced either by the capture of electrons by atomic ions or by the dissociation of molecular ions as the 10-keV ions pass through a thin foil or through a region filled with gas. About 2% of the positive ions are converted to negative ions, and beam currents of negative ions as large as 300 μA have been produced by this method.[4] While this type of negative ion source is satisfactory for accelerators where the ion source is located externally, it is not easily adapted for use in a cyclotron.

Another method of producing negative ions has been used in the Berkeley heavy-ion accelerator (Hilac)[5] for experiments on the stripping of electrons from D^- ions by magnetic fields.[6] In these experiments, negative deuterium beams of several hundred μA were extracted directly from the ion source without

the necessity of a charge-exchange foil or gas-filled region. The ion source used in these experiments was a cold cathode Penning (PIG) discharge with radial extraction--a type that could be easily adapted for use in a cyclotron. The production of negative ions with this source is described in the next section.

In ion sources customarily used in cyclotrons, the discharge is sustained by electrons emitted from a hot filament. The investigation of the yield of negative ions that can be obtained from sources of this type is described in Sec. III.

II. COLD CATHODE SOURCE

Figure 1 is a drawing of the PIG ion source used on the Hilac. A detailed description of this source has been given by Anderson and Ehlers.[7] The tantalum cathodes were pulsed negative with respect to the anode for 4 msec at a rate of 12 pulses per second. The arc was operated in a magnetic field of 2000 G. To extract negative ions, the entire arc structure was biased 12 keV negative, and the extractor electrode was grounded. The 12-keV ions from the source were deflected 120 deg by the magnetic field. They emerged from the magnetic field normal to the pole boundary and were collected in a Faraday cup 2 ft from the magnet. Without any additional focusing, the beam was 1-1/4-in. high and 3/8 in. wide at the Faraday cup. The rate of flow of gas into the source was measured with a leak rate gage mounted in the gas feed line.[8]

With the standard 0.0625-in.-wide ion-exit slit in the anode, the largest negative ion beams were obtained when 50 cc/min (STP) of deuterium gas were fed into the source. The pressure in the magnet vacuum tank was 2.6×10^{-4}-mm Hg, and the estimated pressure in the arc chamber was 60 μ. When a special anode with a 0.025-in.-wide slit was tried, a 30% larger negative beam was obtained. For this anode, the maximum beam was obtained with a gas-flow rate of 34 cc/min, and the pressures in the magnet tank and the arc chamber

were 2.2×10^{-4}-mm Hg and 110 μ, respectively. This experiment indicates that it is the high pressure inside the arc chamber and not a high pressure in the magnet vacuum tank that is required to produce the negative ions.

Figure 2 shows the dependence of the various deuterium ion beams on the arc current for a source with tantalum cathodes and a 0.025-in.-wide slit in the anode. The extractor voltage could be varied over wide limits without affecting the negative ion output appreciably. While the data in Fig. 2 were being obtained, the extraction potential was held constant at -12 keV. For each value of arc current, the gas flow was adjusted to give the largest beam of the ion under observation. The gas flow and the arc voltage that resulted are indicated for each point in the figure.

The variation in secondary electron emission of metals is instrumental in changing the arc operating voltage. Thus to determine the effect of arc voltage on the negative ion yield, tests were made with copper and aluminum cathodes. With copper cathodes the arc voltage was 3000 V, and the D^- beam increased to 480 μA. With aluminum cathodes the arc voltage dropped to 625 V, and only 300 μA of D^- ions were obtained. When the arc voltage was decreased to 400 V by feeding the gas into the arc near the cathodes instead of in the center of the anode, the yield of D^- ions dropped to 120 μA.

In their study of the production of negative ions in a chlorine arc, Bohm et al. suggested that negative ions are formed mostly outside the arc column by plasma electrons that have diffused out of the column.[9]

This suggestion led to tests of a source with a special anode that had a 7/16-in.-diameter arc chamber instead of the standard diameter of 1/4 in. The primary arc column was confined to a region of 1/4-in. diameter by restrictions in the end of the anode. With the restrictions located so that the arc column was 1/8 in. back from the 0.0625-in. ion-exit slit in the anode, a 740 μA beam of D^- ions was obtained with a gas flow only half that used for maximum beam with the standard anode.

With the 1/4-in.-diameter arc chamber and the 0.025-in.-wide slit a 550 μA beam of O^- ions was obtained. For maximum O^- beam the gas flow was only 3.9 cc/min, the arc current peaked at 0.3 A, and the arc voltage was 925 V. With the 7/16-in.-diameter arc chamber the O^- beam increased to 760 μA.

III. HOT FILAMENT SOURCE

The hot filament test ion source used to produce negative ions was similar in many respects to the source used in the 88-inch cyclotron at Berkeley.[10] Figure 3 is a cross-sectional drawing of the test source. The filament (A) was cut from 0.150-in.-thick tantalum sheet and was heated by about 380 A dc. The reflector (B) was also tantalum. This electrode was electrically insulated from the rest of the source structure and could be externally connected to either the filament or the anode (C). The arc was defined by a 1/8×3/32-in. slot that was aligned so that the arc column was immediately behind the ion-exit slit in the anode. This source was operated continuously, and its arc voltage could be controlled by varying the amount of heating power applied to the filament. In this source geometry, which was initially designed for production of multiply charged heavy ions, the 1/2×3/64-in. exit slit (C) was not the only opening through which gas could leave the arc chamber. Gas from the arc chamber could flow to the vacuum system through openings along both cathode support structures, and therefore it was difficult to make accurate estimates of the arc chamber pressure. However, the pressures in the arc chamber were of the same order of magnitude as those used in the cold cathode source.

The ion source was mounted in the 8-in. gap of a test magnet and operated in a magnetic field of about 4000 G. Ions from the source were deflected through 180 deg by this magnet and were monitored by a traveling Faraday cup that could

be positioned along the focal plane of the 180-deg spectrometer. At this point, the beam was about 0.15 in. wide and 3/8 in. high.

Initially the arc was operated with the cold electrode (B) electrically connected to the filament so that arc electrons were reflected. As with the cold cathode source, the best negative ion beams were obtained with a high gas flow into the source. Figure 4 is a plot of the D^- beam as a function of arc current at a variety of gas flow rates. The arc voltage was peaked for maximum ion output at each gas flow rate. There was no great change in the optimum arc voltage with gas flow rate, and the optimum was always between 325 and 375 volts. The arc was not operated up to 4 A for all gas flow rates. The last point taken in all cases was the one at which the externally supplied filament power had been reduced to zero. At this point the filament was being heated solely by ion bombardment, and any further increase in arc current would have resulted in a decrease in arc voltage. No attempts were made to operate the arc beyond its controlled conditions.

By connecting the reflector electrode to the anode, the arc geometry was changed to that of a diode, and electrons from the filament made only a single transit through the plasma. Figure 5 is a plot of the D^- ion output as a function of arc current at the same gas flow rates as used before. In this case it was possible to operate the arc at currents up to 5 A at all gas flow rates. At the highest gas flow rate, however, the filament heating power was reduced to zero, and again no attempt was made to operate the arc beyond this region of control. The arc voltage that resulted in the best D^- beam current was quite sensitive to the gas pressure, and increased markedly with gas flow rate. As indicated in Fig. 5, at the lowest gas flow rate, an arc voltage of only 100 V produced the maximum beam, whereas more than 300 V were required at the maximum gas flow rate used. The electrons, which gain their full energy while

passing through the thin sheath between the filament and the plasma, thus require a higher initial energy in order to arrive at the slit region with the most favorable energy as the pressure is increased.

IV. DISCUSSION

The dc voltage used to extract negative ions from the source is also very effective in extracting electrons. The electrons from the plasma move in small trochoidal orbits and migrate along equipotential lines to the insulators that support the source structure. In a magnetic field of 3 kG, the ion extraction gradients used remove several hundred mA of electrons from the source. The electron drain decreases with the square of the magnetic field, but even at 10 kG the electron currents are high enough to cause discharges that damage the insulators in a short time. In both sources the insulators were protected by dumping the electrons on an inclined carbon block that created a component of the electric field parallel to the magnetic field (see F in Fig. 3). While being removed, these electrons receive full extraction potential, and considerable power is applied to a relatively small area. This in turn results in localized heating and gas bursts that can make it difficult to maintain high extraction potentials for an extended period of time.

The electron drain varied as the 3/2 power of the extractor voltage and was apparently space-charge limited. The negative ion beam, however, was essentially independent of the extraction potential in both the cold cathode and the hot filament sources. This result indicates that the numerous electrons in the region between the anode slit and the extractor electrode do not play a significant role in the formation of the negative ions. Estimates of the electron density in this region also indicate that it is too low to allow an appreciable number of deuterium atoms to capture electrons.

Because the negative ion beam is effectively emission-limited, any action that will increase the number of negative ions present in the region of extraction, such as an increase in arc pressure, will immediately be reflected as an increase in negative ion beam current. With the extraction of positive ions under similar operating conditions, this was not the case. The beam of positive ions extracted was space-charge limited for most all operating conditions, and a change in arc conditions that increased the positive ion density in the arc would not necessarily increase the extracted beam current.

Extraction normal to the magnetic field may be an important factor in the ability of these sources to produce such large beams of negative ions. At the plasma surface, extraction of negative ions is affected by the large space charge of the electrons present in this region. However, these electrons are severely limited in their travel toward the extraction electrode by the magnetic field and are sorted out rapidly. With the operating conditions described, a D^- ion with an energy as small as 0.01 eV normal to the magnetic field has a radius of gyration larger by one order of magnitude than the maximum excursion given an electron by the ion-extraction gradient. Therefore, the D^- ions can easily penetrate the thin electron space-charge layer.

The operation conditions of the ion source arcs described here are not vastly different from those in some of the ion sources that embody extraction in line with a magnetic field. Thus one could reasonably expect that they too have the ability to produce some negative ions directly. However, extraction of the negative ions would be inhibited by the large electron space charge throughout the extraction region.

For both sources the gas flow required to produce D^- beams in the mA region was higher than the flows normally used in accelerator ion sources. To keep the gas pressure in the magnet vacuum tanks below 10^{-4}-mm Hg, a 14-in. diffusion pump was used on the PIG source test stand, and a 16-in. pump was

used with the hot filament source. For an accelerator where the ions have a long trajectory or where high voltages must be held in the vacuum, a lower pressure would be needed. By reducing the area of the anode slit, the gas flow could be reduced while the pressure is still maintained inside the arc above the 100 μ required.

In the case of the hot-filament geometry, an even bigger gain in system pressure could be had by eliminating all openings from the arc chamber regions to the system vacuum other than the ion-exit slit.

Use of a narrower slit with the cold cathode source actually increased the D^- beam as well as reduced the tank pressure. This experiment is evidence that the D^- ions are not formed by collisions with gas molecules in the extractor region but are created in the arc chamber.

The method of formation of the negative ions that seems most plausible involves the collision of electrons with neutral deuterium molecules. The collisions can cause the molecules to dissociate in one of two ways.

$$D_2 + e \rightarrow D + D^- , \tag{1}$$

$$D_2 + e \rightarrow D^+ + D^- + e , \tag{2}$$

The cross sections for reactions of this kind have been measured for ordinary hydrogen by Shulz.[11] The cross section for the dissociative capture reaction (1) has a sharp peak of 3.5×10^{-20} cm^2 for electrons with an energy of 14.2 eV. The threshold for the simultaneous production of H^+ and H^- is 17.2 eV. The cross section is rising linearly at 38 eV (the highest electron energy for which measurements have been made) and has a value of about 3×10^{-20} cm^2 at this point. The cross sections for the dissociation of deuterium molecules probably behave in a similar way. Reaction (2) appears to be the most probable source of D^-, since the cross section is relatively high over a rather wide range of electron energies.

An indication for the upper limit of the most favorable electron energy range can be had from the diode-type operation. With this geometry, the electron energy in the region of ion extraction can be effectively tuned by changing the arc voltage. An arc voltage of 100 V was best for operation at the lowest arc pressure; this indicates therefore, that the optimum electron energy does not exceed this value.

According to this picture, an intense plasma with high electron temperatures should be required to produce large numbers of negative ions, and this seems consistent with the experimental results.

FOOTNOTES AND REFERENCES

* Work done under the auspices of the U.S. Atomic Energy Commission.

1. D. A. Lind, et al., in Proceedings of an International Conference on Sector-Focused Cyclotrons, University of California, Los Angeles, April, 1962 (to be published in Nucl. Instr. and Methods).
2. J. L. Danforth, Can. Electron. Engr. 2, 18 (1958).
3. K. W. Allen, F. A. Jillian, P. W. Allen, A. E. Pyrah, and J. Blears, Nature 184, 303 (1959).
4. R. H. V. M. Dawton, Nucl. Instr. and Methods 11, 326 (1961).
5. E. L. Hubbard, W. R. Baker, K. W. Ehlers, H. S. Gordon, R. M. Main, N. J. Norris, R. Peters, L. Smith, C. M. Van Atta, F. Voelker, C. E. Anderson, R. Beringer, R. L. Gluckstern, W. J. Knox, M. S. Malkin, A. R. Quinton, L. Schwarcz, and G. W. Wheeler, Rev. Sci. Instr. 32, 621 (1961).
6. R. V. Pyle, S. N. Kaplan, and G. A. Paulikas, Electron Detachment from D^- Ions by the Lorentz Force of a Magnetic Field, Bull. Am. Phys. Soc. Ser. II 7, 487 (1962).
7. C. E. Anderson and K. W. Ehlers, Rev. Sci. Instr. 27, 809 (1956).
8. K. W. Ehlers, Rev. Sci. Instr. 29, 72 (1958).
9. D. Bohm, E. H. S. Burhop, H. S. W. Massey, and R. W. Williams, A Study of the Arc Plasma, in Characteristics of Electrical Discharges in Magnetic Fields, A. Guthrie and R. K. Wakerling, Eds. (McGraw-Hill Book Co., New York, 1949), p. 216.
10. Kenneth W. Ehlers, Design and Development of the Ion Source for the Berkeley 88-in. Cyclotron, UCRL-10080, Feb. 23, 1962.
11. G. J. Shulz, Phys. Rev. 113, 816 (1959).

FIGURE CAPTIONS

Fig. 1. Cross section drawings of the cold cathode PIG ion source used in the Hilac.

Fig. 2. Beam currents of D^-, D^+, and D_2^+ ions obtained from the cold cathode ion source for various values of the arc current. Numbers above the experimental points are the quantity of gas flowing into the arc in cc/min at STP. Numbers below the points are the voltage drop across the arc.

Fig. 3. Cross-sectional drawing of the hot filament test ion source. (A) filament, (B) cold reflector electrode, (C) ion exit slit, (D) gas feed line, (E) water cooling tubes, (F) trochoidal electron dump block.

Fig. 4. Current of D^- ions obtained from the hot filament ion source with cold electrode (B) connected to the filament potential so that it reflected arc electrons. The gas flow into the source is indicated for each curve in cc/min at STP. The arc voltage was close to 350 volts for all the curves.

Fig. 5. Current of D^- ions obtained from the hot filament ion source with reflector electrode (B) connected to the anode potential so that it collected electrons from the filament after they made only a single transit through the arc. For each curve the gas flow in cc/min at STP and the arc voltage that gave the largest yield of D^- ions are indicated.

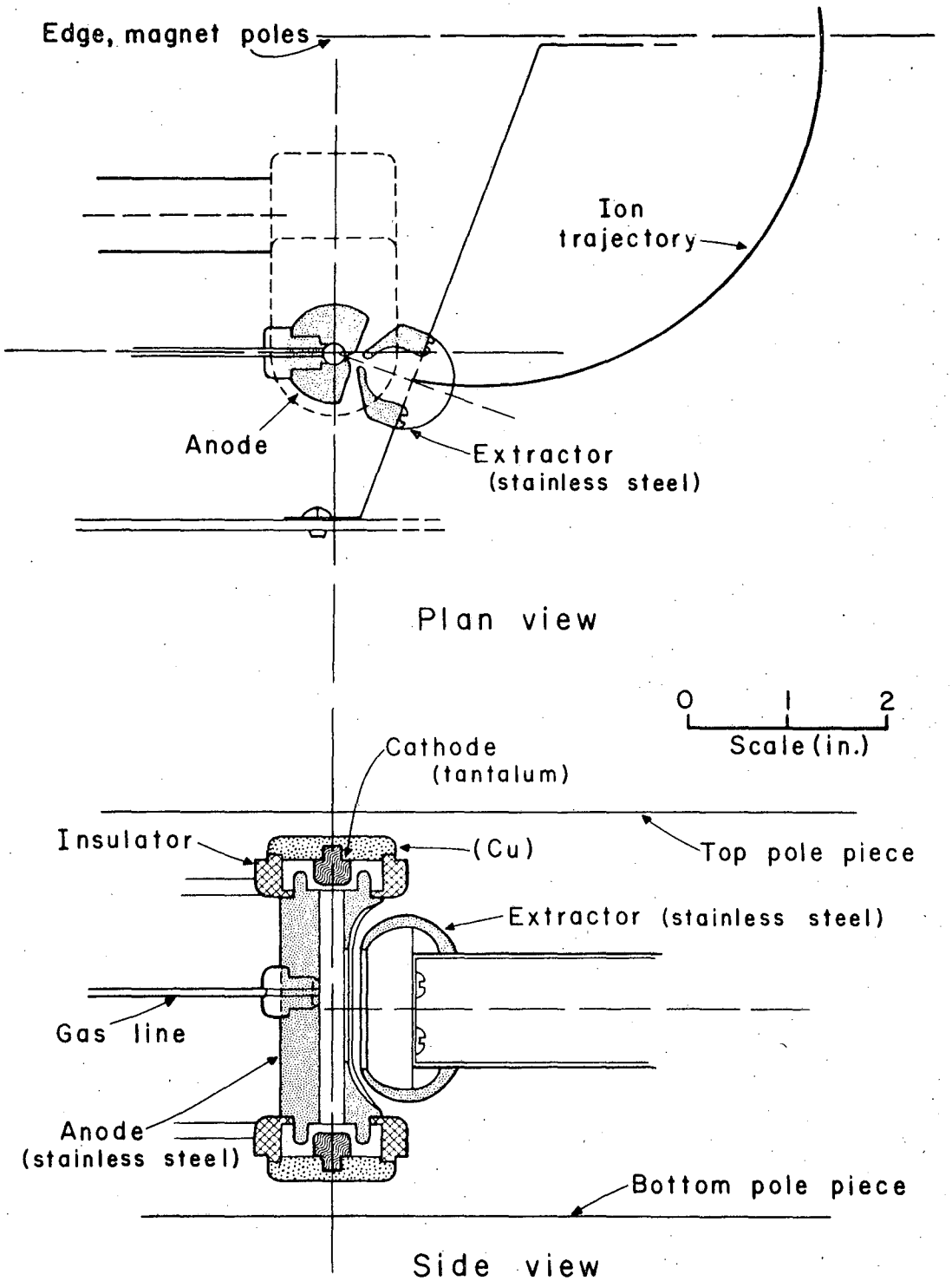

Fig. 1.

MU-27840

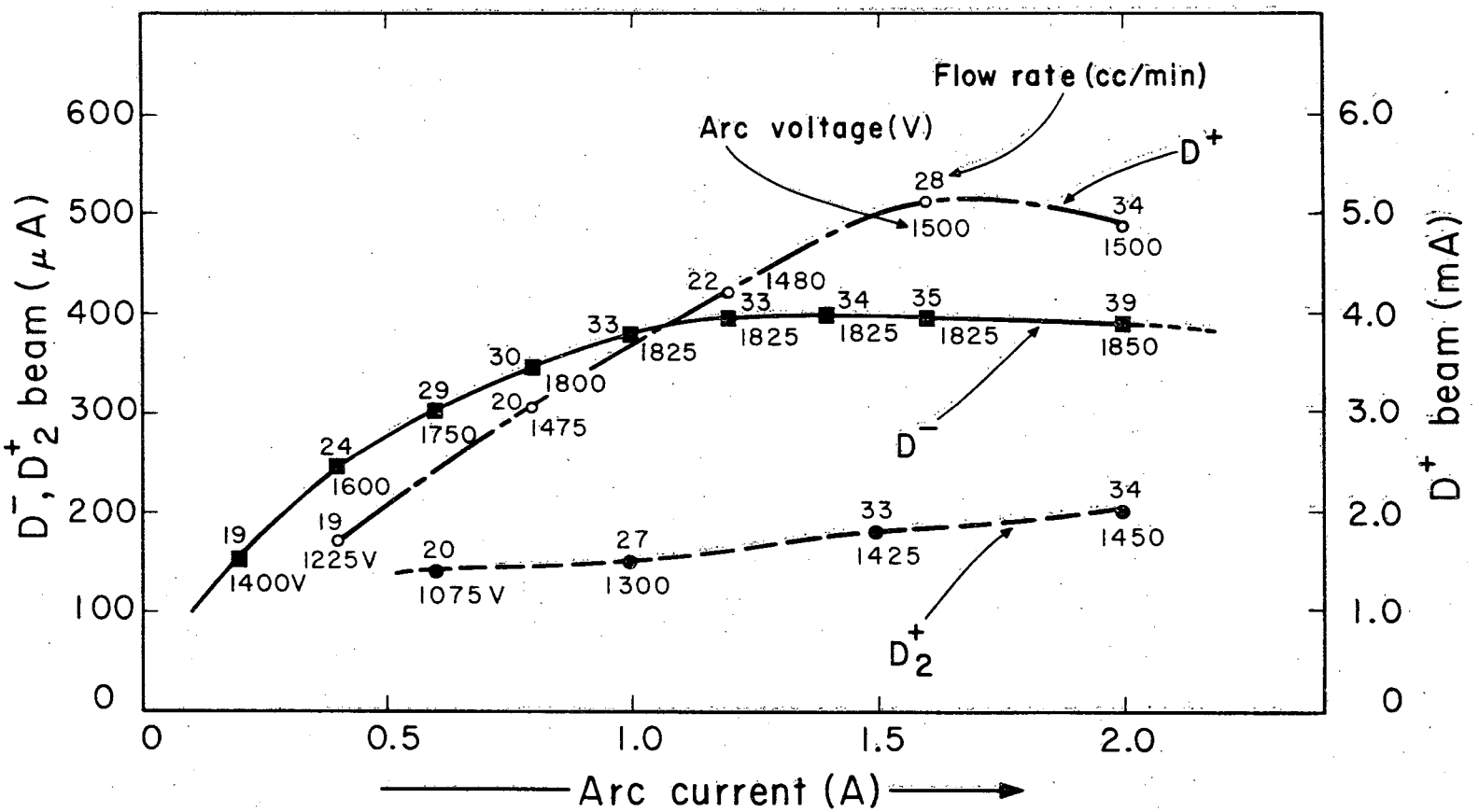

MU-27841

Fig. 2.

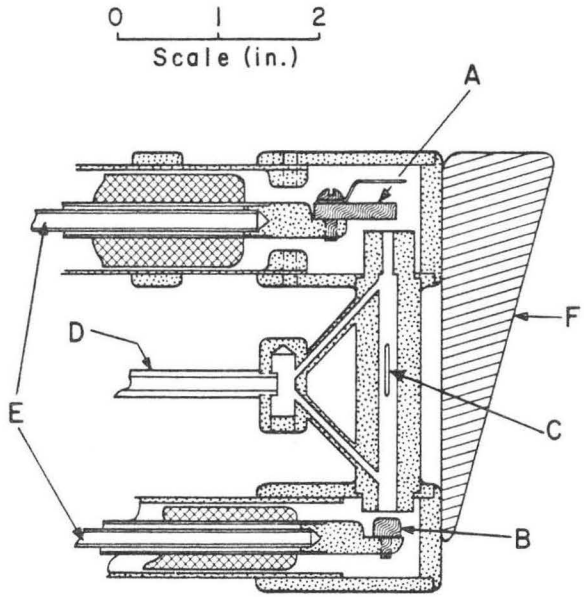

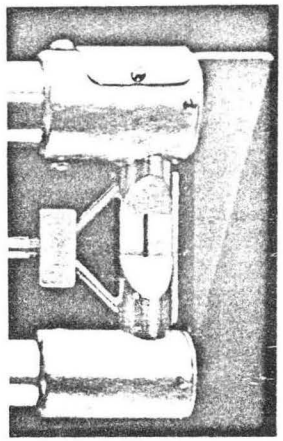

Copper
Tantalum
Insulation
Carbon

A – Filament
B – Cold reflector electrode
C – Ion-exit slit
D – Gas feed line
E – Water-cooled squirt tubes
F – Trochoidal electron dump block

HOT FILAMENT ION SOURCE

MUB-1271

Fig. 3.

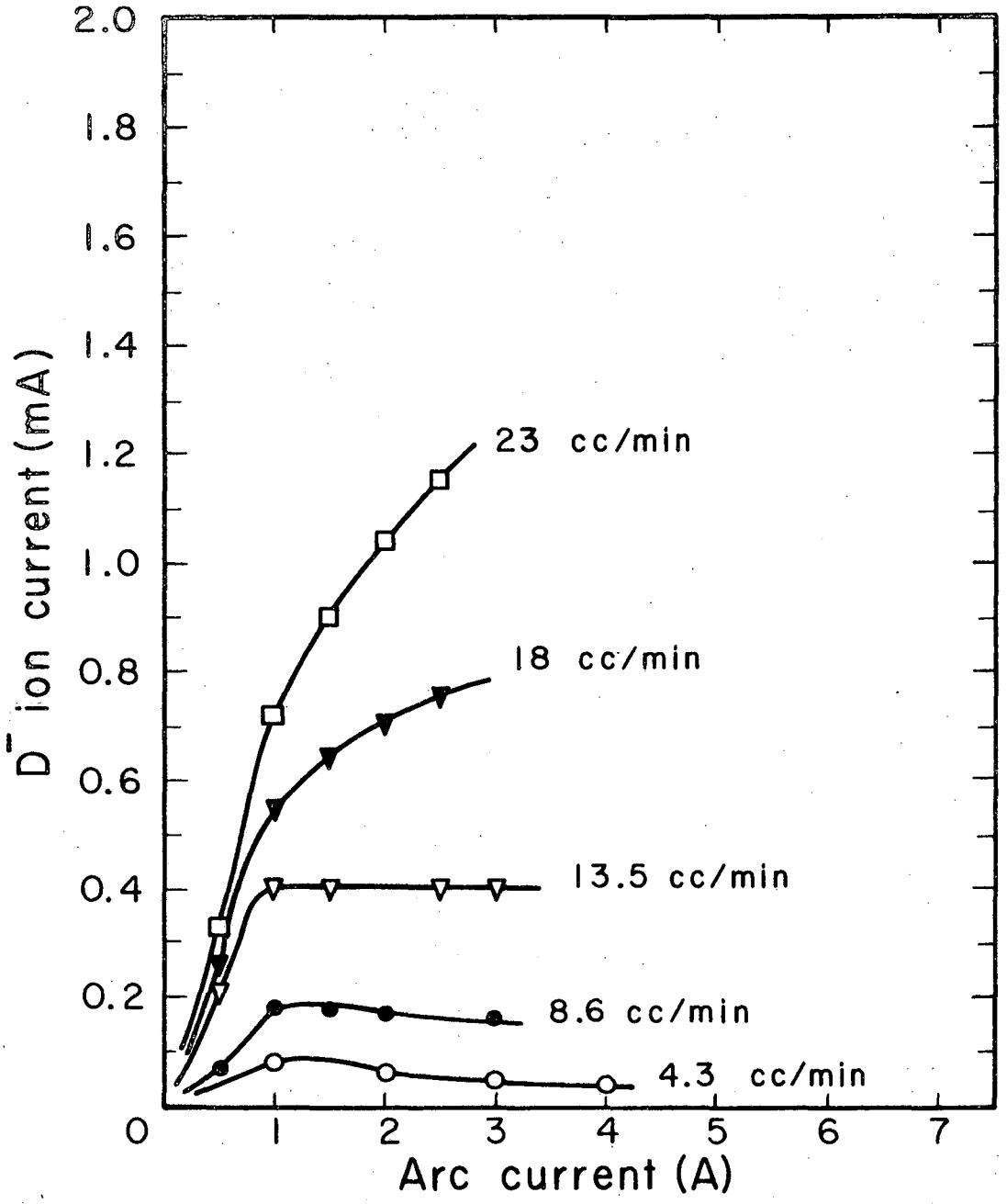

Fig. 4.

MU-27842

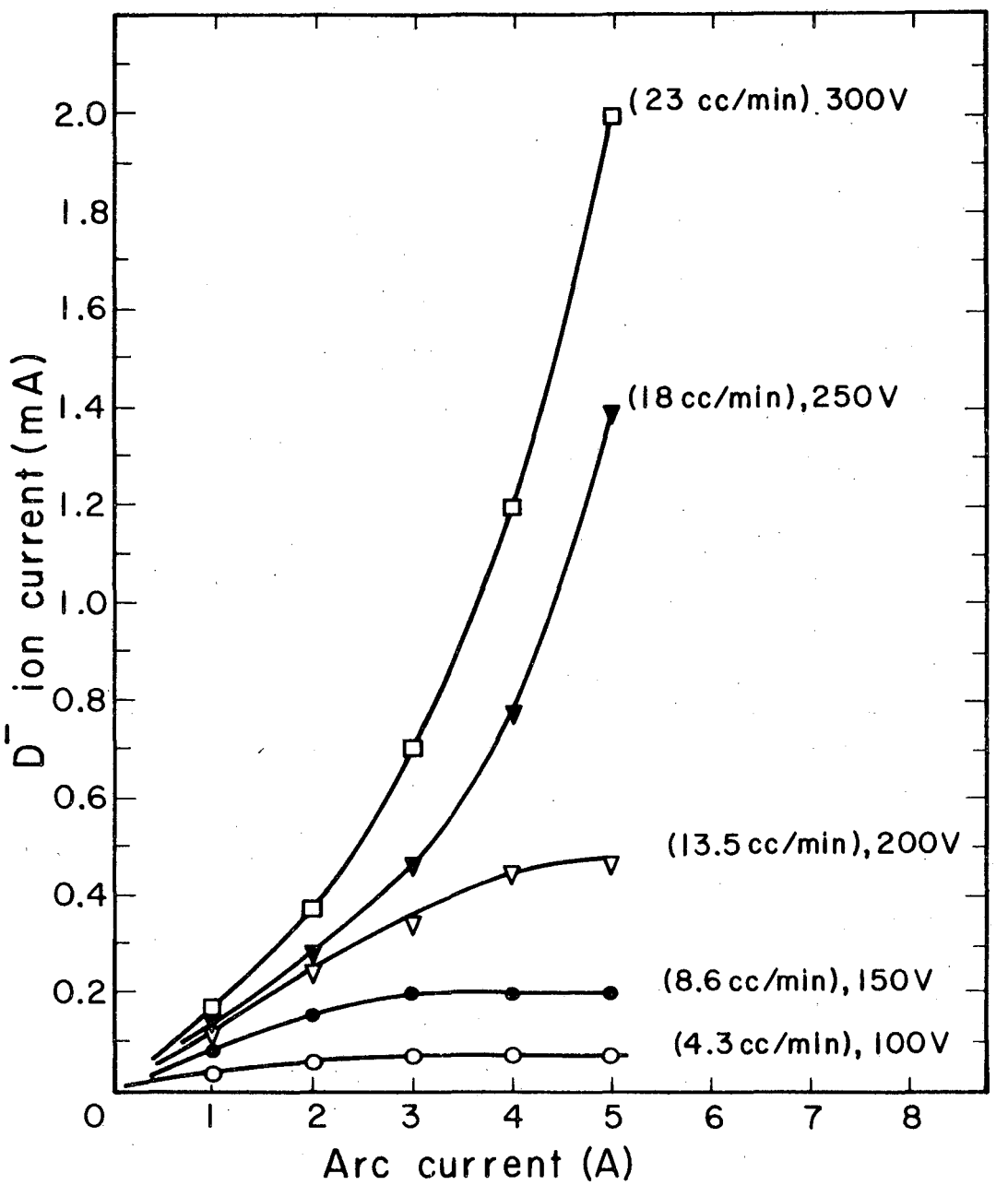

Fig. 5.

MU-27843

This report was prepared as an account of Government sponsored work. Neither the United States, nor the Commission, nor any person acting on behalf of the Commission:

A. Makes any warranty or representation, expressed or implied, with respect to the accuracy, completeness, or usefulness of the information contained in this report, or that the use of any information, apparatus, method, or process disclosed in this report may not infringe privately owned rights; or

B. Assumes any liabilities with respect to the use of, or for damages resulting from the use of any information, apparatus, method, or process disclosed in this report.

As used in the above, "person acting on behalf of the Commission" includes any employee or contractor of the Commission, or employee of such contractor, to the extent that such employee or contractor of the Commission, or employee of such contractor prepares, disseminates, or provides access to, any information pursuant to his employment or contract with the Commission, or his employment with such contractor.