UCRL-10452

University of California

Ernest O. Lawrence Radiation Laboratory

TWO-WEEK LOAN COPY

This is a Library Circulating Copy which may be borrowed for two weeks. For a personal retention copy, call Tech. Info. Division, Ext. 5545

Berkeley, California

DISCLAIMER

This document was prepared as an account of work sponsored by the United States Government. While this document is believed to contain correct information, neither the United States Government nor any agency thereof, nor the Regents of the University of California, nor any of their employees, makes any warranty, express or implied, or assumes any legal responsibility for the accuracy, completeness, or usefulness of any information, apparatus, product, or process disclosed, or represents that its use would not infringe privately owned rights. Reference herein to any specific commercial product, process, or service by its trade name, trademark, manufacturer, or otherwise, does not necessarily constitute or imply its endorsement, recommendation, or favoring by the United States Government or any agency thereof, or the Regents of the University of California. The views and opinions of authors expressed herein do not necessarily state or reflect those of the United States Government or any agency thereof or the Regents of the University of California.

UCRL-10452
(corrections made)

UNIVERSITY OF CALIFORNIA

Lawrence Radiation Laboratory
Berkeley, California

Contract No. W-7405-eng-48

A RECORDING SYSTEM FOR MEASURING BIOELECTRIC TRANSIENTS

Michael D. Gainey, William C. Berger, and Yukiko Tagami

September 4, 1962

A RECORDING SYSTEM FOR MEASURING BIOELECTRIC TRANSIENTS

Michael D. Gainey, William C. Berger, and Yukiko Tagami

Lawrence Radiation Laboratory
University of California
Berkeley, California

September 4, 1962

ABSTRACT

A recording system for measuring bioelectric potentials from 100 μV to 100 mV in nerve and muscle tissue of rats and guinea pigs is described. Several recording electrodes suitable for use with these small animals are explained. Amplifiers capable of driving a multichannel 600-cps galvanometer oscillograph recorder completes the system. A method of synchronized electrical stimulation and low-level recording in these animals is discussed.

A RECORDING SYSTEM FOR MEASURING BIOELECTRIC TRANSIENTS

Michael D. Gainey, William C. Berger, and Yukiko Tagami

Lawrence Radiation Laboratory
University of California
Berkeley, California

September 4, 1962

INTRODUCTION

A four-channel recording system for measuring bioelectric transients is described which was developed for neurological investigation. The system is designed to record potentials from the central nervous system as well as from muscle tissue. Signals from 50 μV to 100 mV can be recorded with maximum frequency response of 600 cps. Electrical stimulation in the central nervous system of an animal with simultaneous recording of observed biological potentials from elsewhere in the nervous tissue can be accomplished.

Figure 1 shows a diagram of the system, which consists of pickup electrodes, a junction box, amplifiers with synchronized switches on the input, a recorder, an electrical stimulator, and a time-base unit. A description of each unit follows.

ELECTRODES

The recording electrodes were developed for experiments on rats and guinea pigs. Their design fits the regional anatomy in which signals are to be recorded. Designs that gave the most flexible mechanical operation were chosen for use with these small animals, because any motion may result in mechanical trauma to soft tissue as well as introduction of a movement artifact into the bioelectric signal being recorded. In general, the electrodes must be very light-weight and must "ride" with the animal during recording.

For recording electromyograms, (EMG or bioelectric muscle potentials) two 8-in. copper-enameled No. 34 or No. 36 wire leads are inserted into the muscle 1/4-in. apart, by using a No. 26 hypodermic needle, which is then withdrawn. A small "fish-hooking" of the end of the electrode facilitates holding the electrode in the tissue once it has been inserted. When the needle

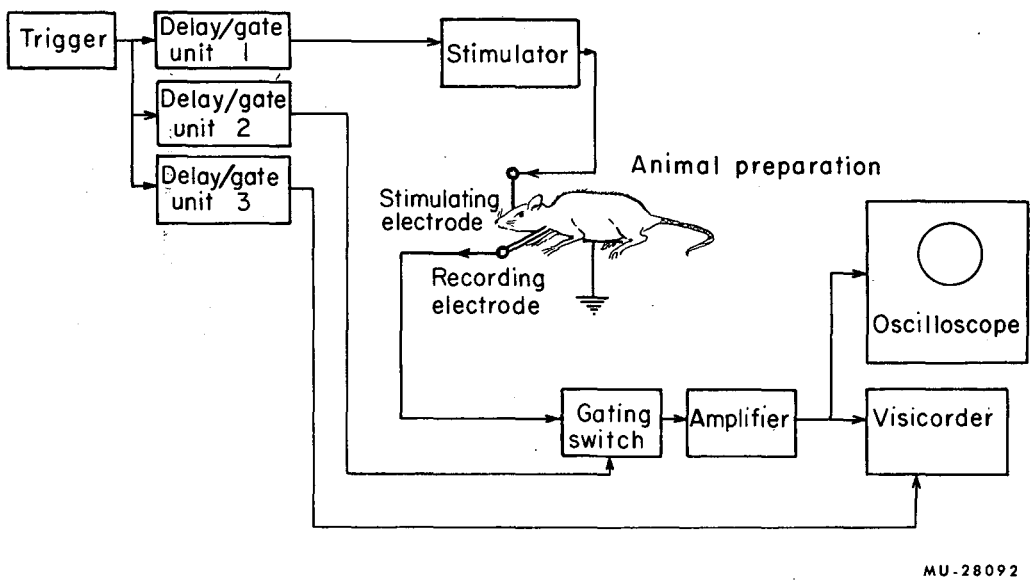

Fig. 1. Diagram of system.

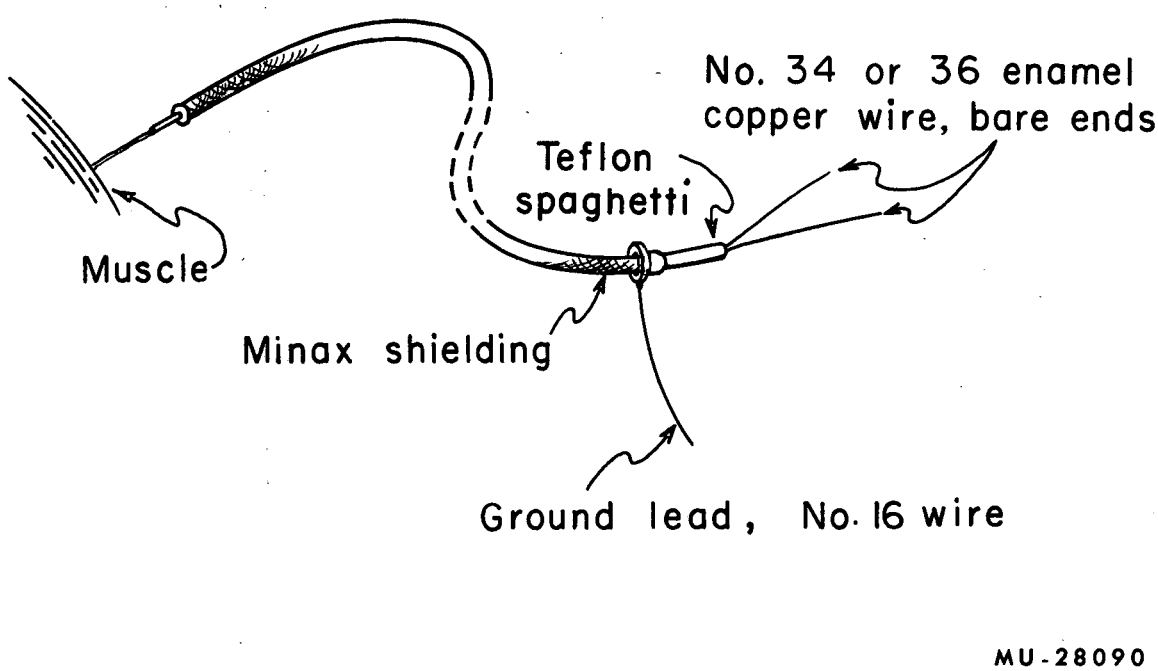

Fig. 2. Electromyogram electrodes.

has been withdrawn from the muscle, the two free electrode leads are threaded together through a shielded Teflon tubing to a connector box with cables extending to the amplifiers. The electrodes are shown in Fig. 2.

Three different types of electrocorticogram (ECG or brain-wave) electrodes were built which suit the experimental conditions quite well. These models are a clip-on type, a "goose-neck", and a rigidly mounted type. Shown in Fig. 3 is the clip-on type which is convenient for sampling biological potentials from several points on the cerebral cortex. It consists of three dual electrodes connected to shielded cables embedded in a small lucite block. The electrode is secured to the animal by means of a clip which clamps to a similar plastic block immediately below. The second block is attached to the calvaria by opening two or three trephine holes, filling with dental cement, and setting the block in place over the holes. The result is a rigid framework with a rivet-type connection to the skull on which the electrode block is clipped. Soft 5 mil silver wire is used for the electrodes because they are flexible and can be adjusted to position without springing back.

The "goose-neck" electrode (Fig. 4) is a convenient type for taking single recordings in a region of the animal brain. It is made by attaching two short lengths of No. 34 enameled copper wire to the outside of a small piece of 1/16-in.-diam. radio solder with small strips of masking tape. The assembly is then dipped in Glyptal or similar insulating enamel and allowed to dry. Connection is made to a twin-lead cable, and the solder arm is bonded to a surgical wound clip. The tooth of the wound clip is inserted in a trephine hole and drawn taut by means of surgical thread to a clamp fitting provided on the rat holder. This system makes a semi-rigid platform from which the solder-electrode arm may be positioned at locations desired on the cortex.

The third cortical electrode developed was a type suitable for mounting in a chronic preparation. It is shown in Fig. 5. This electrode is designed around a modified Amphenol type 27-11 subminax connector. The inner stub of insulating plastic is removed down to the base with a No. 53 drill. Two 5-mil enameled tungsten wires are bonded together with Glyptal and the free ends (which have been bared) are led into separate teflon spaghetti tubes which have been cut to a size that will fit down inside the connector. The electrodes and tubes are bonded to the connector fitting with epoxy. The male connector is built in a similar fashion from an Amphenol Type 27-7 Subminax

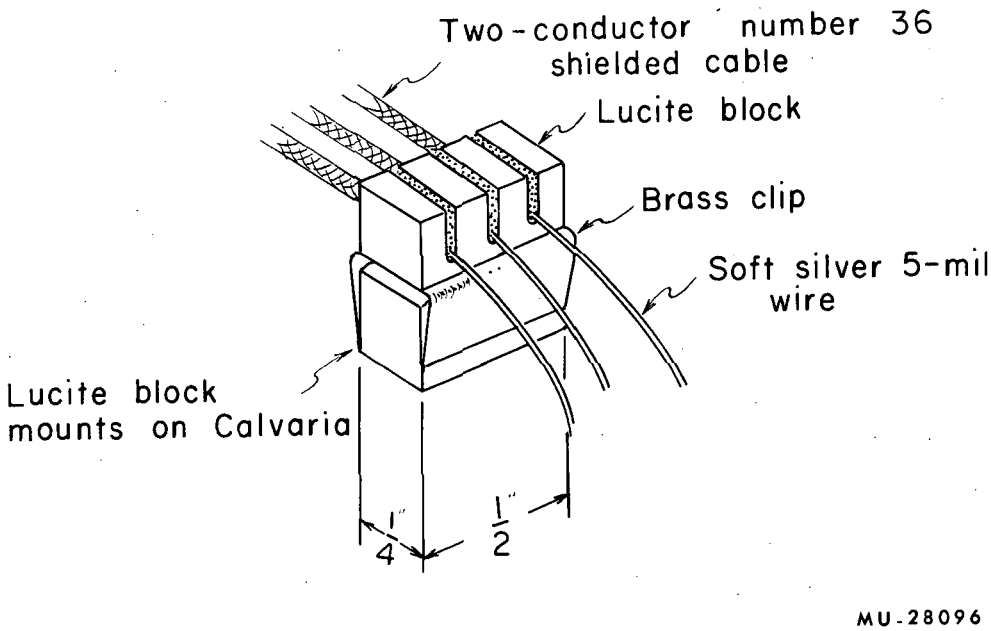

Fig. 3. Clip-on-type electrode.

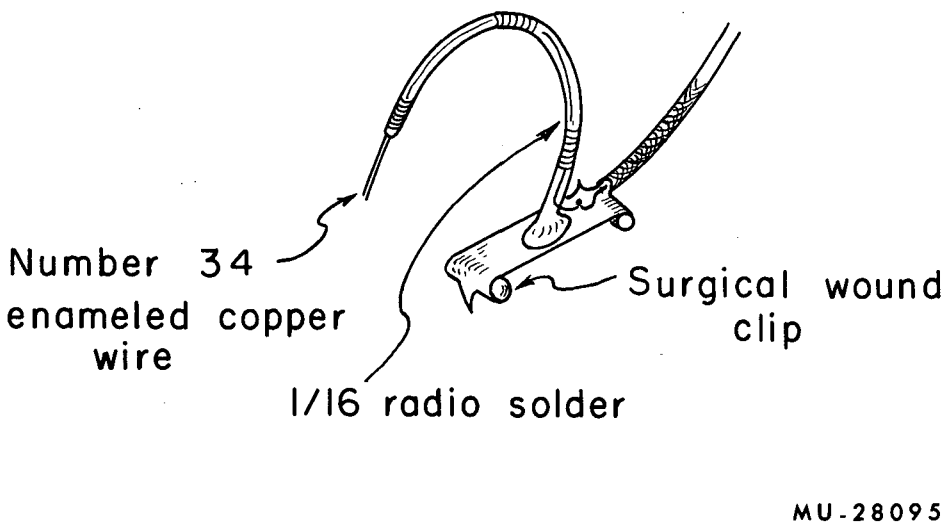

Fig. 4. Gooseneck-type electrode.

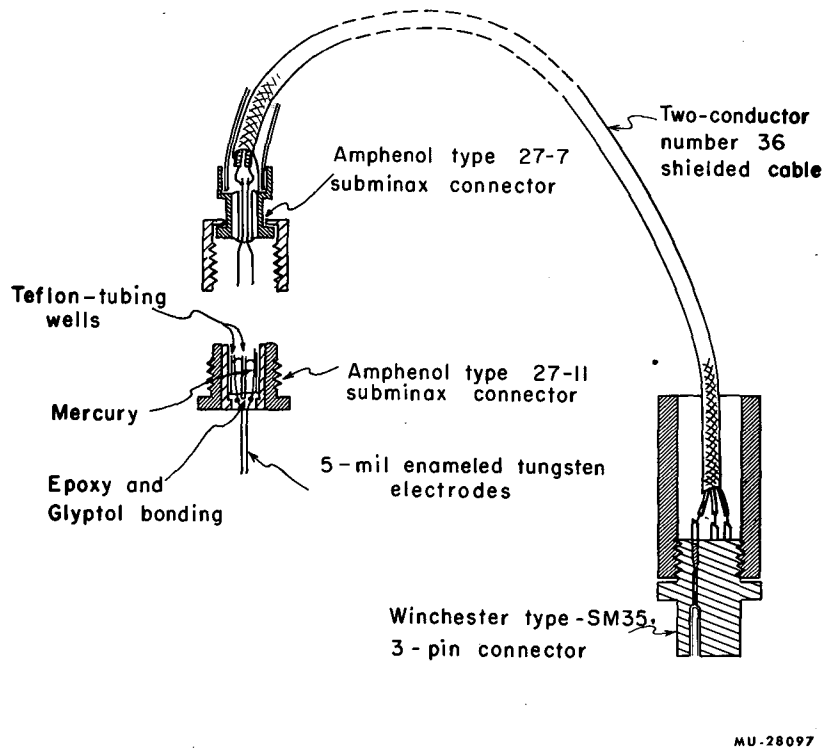

Fig. 5. Mounted or chronic-implant-type electrode showing cable connector (scale ≈ 2X).

connector, but with two bare prongs (leading from a shielded cable) which extend down into the teflon tubes when connected. Prior to use of the electrode, a small drop of mercury is placed in each of the wells formed by the teflon tubes, and when the male prongs are inserted into the tubes electrical contact is completed through the mercury to the cable.

In each of the ECG electrodes described above the shielded cable contains two No. 36 conductors, each consisting of seven strands of No. 44 silver wire.* The cables terminate in a 3-pin, type SM35 Winchester connector which plugs into the junction box.

JUNCTION BOX

The connector box located at the animal preparation area allows either four channels of ECG electrodes to be plugged in or four EMG electrodes to be connected to five-way binding posts. The signals are connected to the amplifiers via Bendix "Pigmy" connectors. An animal preparation is shown in Fig. 6 with EMG electrode connections made to the junction box.

GATING SWITCH

In experiments in which electrical stimulation and simultaneous observation of bioelectric response is desired, a system is required that will prevent saturation of the low-level amplifier by stimulation signals, pickup of which can be 500 mV, and yet will leave the amplifiers free to sample the biological signals in the order of a few hundred microvolts immediately following the applied stimulation pulses. This problem is solved by use of a dc chopper relay which switches off the input of the recording amplifiers while the stimulation pulse is applied.

As shown in Fig. 7 an Airpax Model-33 dc chopper relay is used to connect the terminals of the differential amplifier when gating out undesired signals. The switch drive is completely shielded from the signal leads connecting to the amplifier input. At present, this drive is provided by ±6.0 V battery power.

---

*Made by Tensolite Corp., Tarrytown, N.Y., spec. 744 UT2FZ.

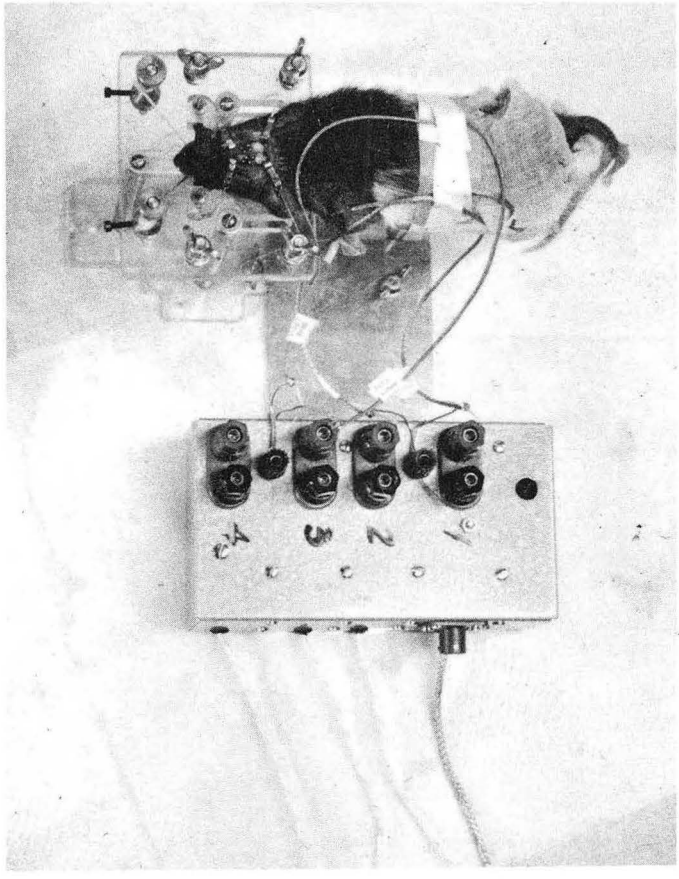

ZN-3248

Fig. 6. Electrode connections from animal to junction box. A rat is shown with electromyogram electrodes inserted and connected for recording.

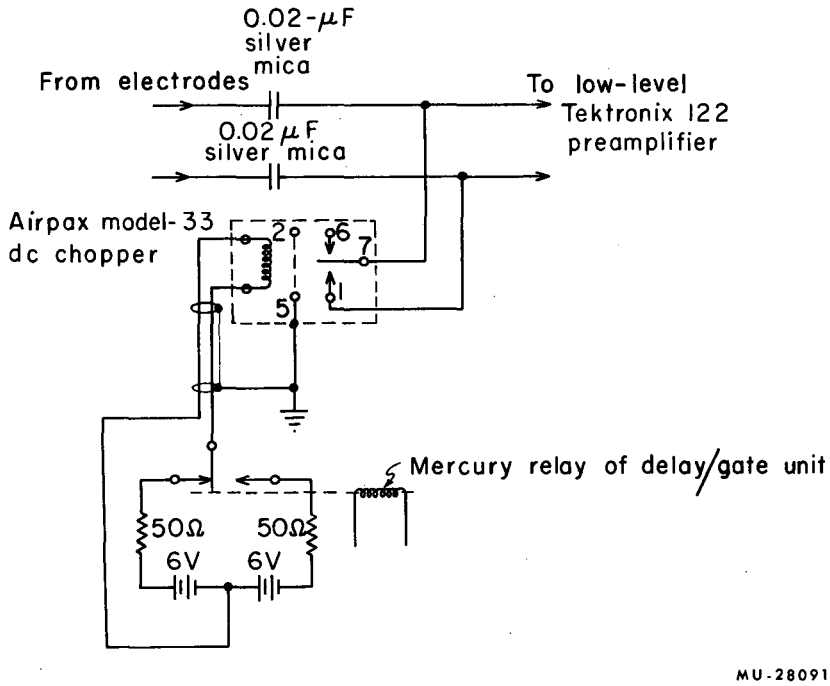

Fig. 7. Gating switch on amplifier input.

The relay switching noise can be reduced to less than 50 μV by adjusting the balance control of the input stage of the Tektronix 122 preamplifier. With the circuit design shown, double pulses (equal positive and negative areas) must be used to stimulate in order to prevent net charging of the two input capacitors. Double pulses are quite satisfactory for stimulation in the central nervous system.

AMPLIFIERS

The Tektronix 122 low-level preamplifier is used to amplify both ECG and EMG signals. Selective gains of 100, 1000, and 10,000 allow input signals of up to 100 mV to be recorded without amplifier saturation.

Since an amplified signal approximately 1 V or greater is required for recording with the Honeywell Visicorder recorder, an additional gain of 10 was added to the Type 122 preamplifier by a relatively simple modification of the final stage from cathode-follower to plate-loaded amplifier with ac-coupled output. The modification shown in Fig. 8, results in an overall gain of greater than 10^4 and a frequency response of 2 cps to over 10 kc.

The wide-band noise level of the amplifier is less than 15 μV with both inputs shorted to ground, and the open-circuit noise level from a biological preparation (physiological saline solution) is less than 30 μV. A Tektronix Model-125 power supply furnishes power to all four amplifiers.

RECORDER

The Honeywell Visicorder is a permanent-record oscillograph which prints out its light-spot trace on photo-sensitive paper. The Heiland M-1000 microgalvanometer is used in this application with driving amplifier and 160-ohm series attenuator. In this configuration, linearity and response are maintained at specifications, and a maximum sensitivity of 1.4 in./100 μV is possible.

The start drive of the Visicorder can be remotely operated as indicated in Fig. 9. It has been noted that the Visicorder should be started at least 200 msec prior to recording the observed biological response, because the starting of the recorder motor introduces electrical spikes on the line which appear in the record. This procedure allows time for the chart to attain maximum recording speed.

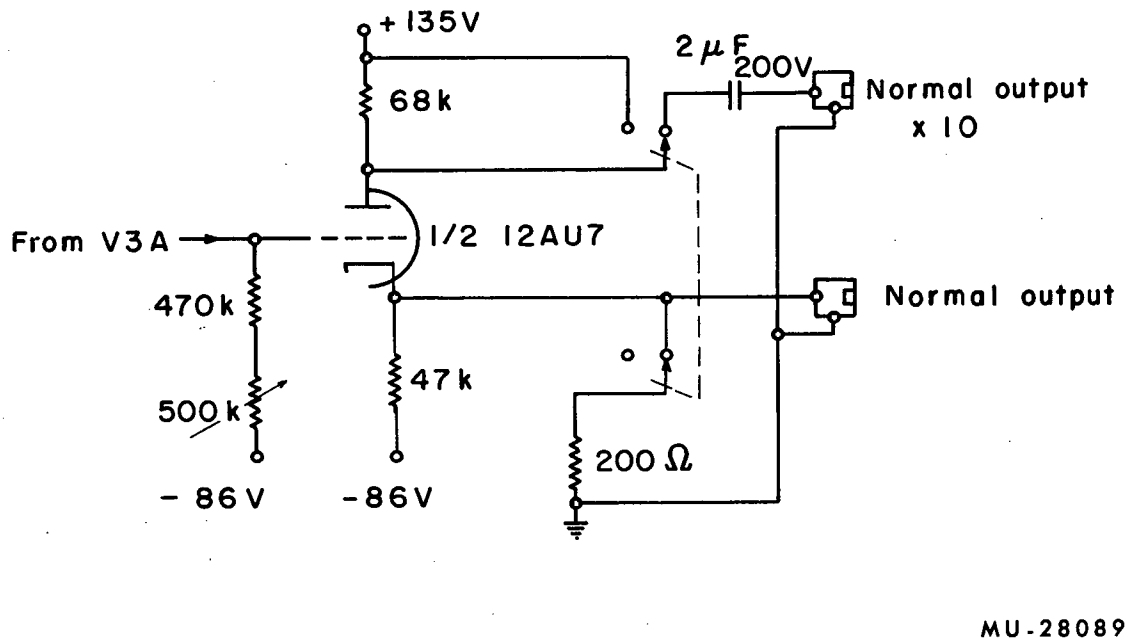

Fig. 8. Modification of the final stage (V3B) of Tektronix 122 low-level preamplifier to achieve an additional gain of 10.

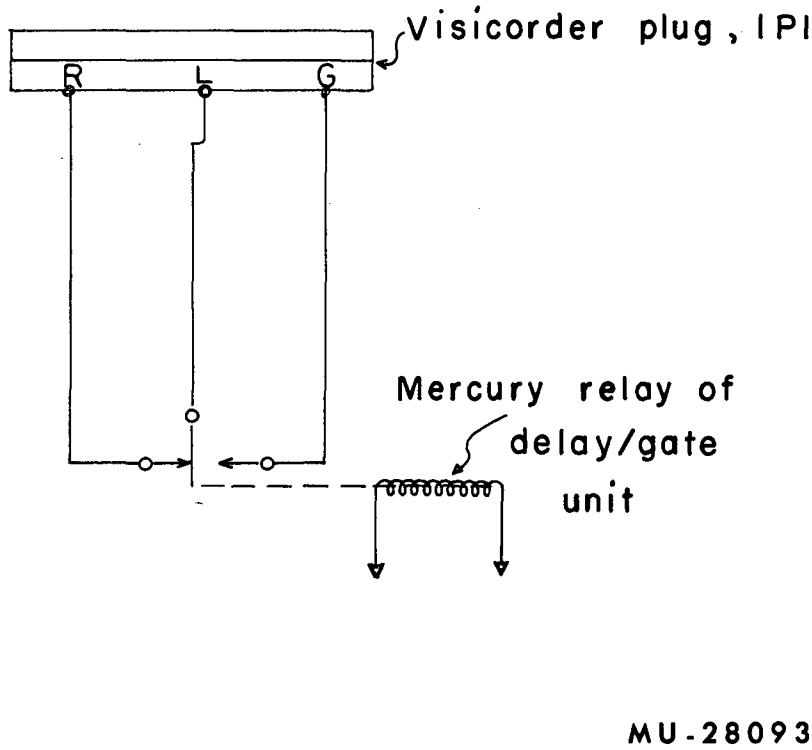

Fig. 9. Connection diagram for remote starting of Visicorder drive motor.

TIME BASE

For synchronization between stimulation and recording, a time-base unit is employed which starts the Visicorder, switches on the stimulating pulses, and operates the noise gate on the amplifier input (see Fig. 10). Delay and gate units that use mercury-relay switches are available from other Laboratory experiment groups.* Delays fron 3 msec to 11 sec and gating times from 100 μsec to 11 sec are possible with these units. The trigger pulse supplying the time base to the units is from a Laboratory test pulser. The power supply for the delay and gate unit is a Universal power supply Mod. III.†

ELECTRICAL STIMULATOR

Stimulation of the central nervous system is achieved by use of square-wave generators and either a mobile probe or fixed electrodes. A stimulator of the design shown in Fig. 11 was available which gives positive or negative square-wave pulses of 1 to 20 V, repetition rates from single pulses to 40 pulses per second, and durations from 1 to 12 msec. Provision is made for external stimulation with other wave form types.

A pulse-shaping network is included to give a double pulse, a quasi-differentiated square wave, from a 1-msec pulse.

The fixed electrodes can be of the same design described for recording electrodes, and a probe-type electrode is made from a multimeter test lead as shown in Fig. 12.

Measurement of current and voltage waveforms is accomplished by using the output circuitry shown in Fig. 11. A scope with differential input is required for measuring current by taking the voltage drop across the 1k resistor that appears in series with the load (animal). The voltage is read directly across the biological preparation. Measurement of current and voltage should be made independently of biological response to avoid the possibility of introducing 60-cps leakage currents from the scope through the stimulator electrode.

* * *

This work was done under the auspices of the U. S. Atomic Energy Commission.

*See drawing No. 3s 4723D for details

†Drawings Nos. 3Z4683D and 3Z5002E.

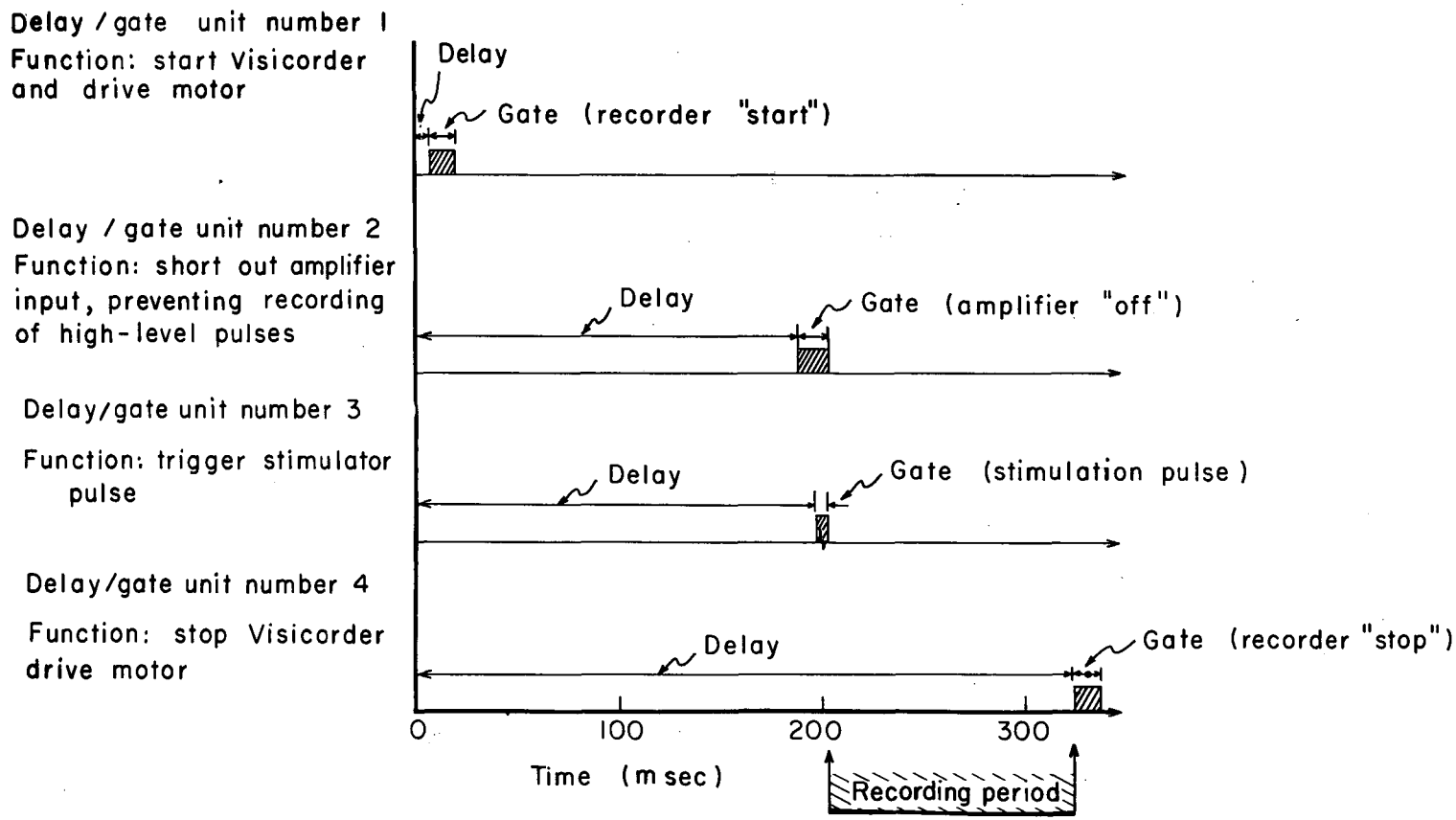

Fig. 10. Use of time-base units to synchronize stimulation and recording. At time t = 0, the trigger pulse activates all delay/gate units.

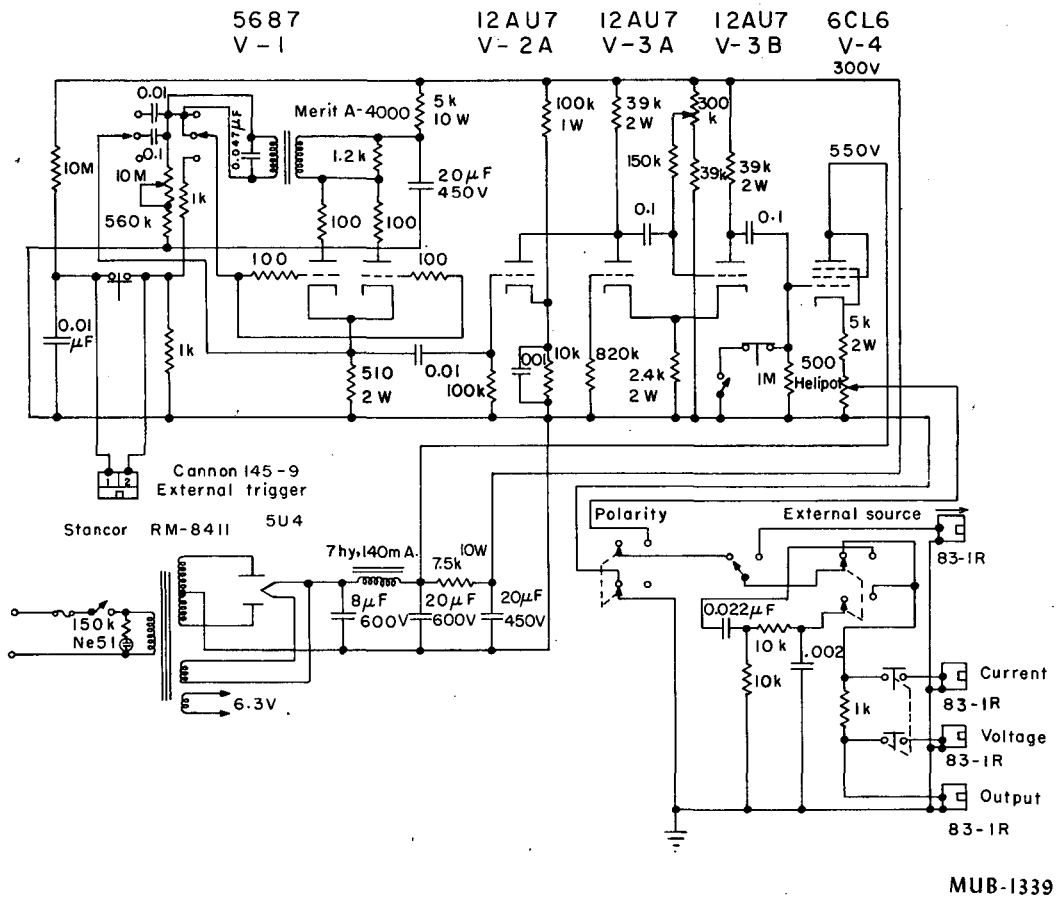

Fig. 11. Circuit diagram of electric stimulator.

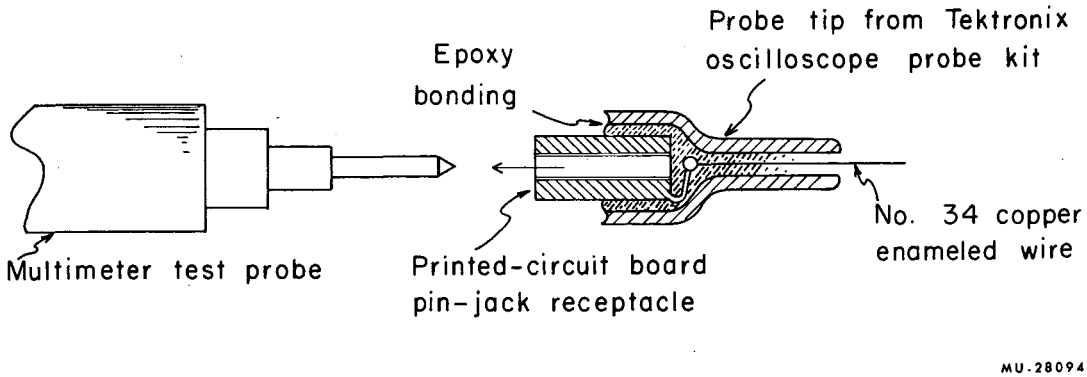

Fig. 12. Stimulator-probe design. The plug-in probe tip allows easy replacement if the tip is damaged. Use of various lengths of tip wire affords control of depth of stimulus application.

ACKNOWLEDGMENTS

The authors wish to acknowledge the considerable assistance given by Dr. Cornelius Tobias, Nickolas Yanni, and members of the Tobias Group throughout this project, and to Robert Sorensen and members of the 14 North staff for their many helpful suggestions.

This report was prepared as an account of Government sponsored work. Neither the United States, nor the Commission, nor any person acting on behalf of the Commission:

A. Makes any warranty or representation, expressed or implied, with respect to the accuracy, completeness, or usefulness of the information contained in this report, or that the use of any information, apparatus, method, or process disclosed in this report may not infringe privately owned rights; or

B. Assumes any liabilities with respect to the use of, or for damages resulting from the use of any information, apparatus, method, or process disclosed in this report.

As used in the above, "person acting on behalf of the Commission" includes any employee or contractor of the Commission, or employee of such contractor, to the extent that such employee or contractor of the Commission, or employee of such contractor prepares, disseminates, or provides access to, any information pursuant to his employment or contract with the Commission, or his employment with such contractor.