UCRL-10523

University of California

Ernest O. Lawrence Radiation Laboratory

TWO-WEEK LOAN COPY

This is a Library Circulating Copy which may be borrowed for two weeks. For a personal retention copy, call Tech. Info. Division, Ext. 5545

ARGON-HELIUM SCINTILLATION

Berkeley, California

DISCLAIMER

This document was prepared as an account of work sponsored by the United States Government. While this document is believed to contain correct information, neither the United States Government nor any agency thereof, nor the Regents of the University of California, nor any of their employees, makes any warranty, express or implied, or assumes any legal responsibility for the accuracy, completeness, or usefulness of any information, apparatus, product, or process disclosed, or represents that its use would not infringe privately owned rights. Reference herein to any specific commercial product, process, or service by its trade name, trademark, manufacturer, or otherwise, does not necessarily constitute or imply its endorsement, recommendation, or favoring by the United States Government or any agency thereof, or the Regents of the University of California. The views and opinions of authors expressed herein do not necessarily state or reflect those of the United States Government or any agency thereof or the Regents of the University of California.

Research and Development

UCRL-10523
Physics UC-34
TID 4500 (18 Ed.)

UNIVERSITY OF CALIFORNIA
Lawrence Radiation Laboratory
Berkeley, California

Contract No. W-7405-eng-48

ARGON-HELIUM SCINTILLATION

Theodore Jenkins and Roger Wallace

October 24, 1962

Printed in USA. Price $1.00. Available from the
Office of Technical Services
U. S. Department of Commerce
Washington 25, D.C.

ARGON-HELIUM SCINTILLATION

Theodore Jenkins and Roger Wallace

Lawrence Radiation Laboratory
University of California
Berkeley, California

October 24, 1962

ABSTRACT

The scintillation of liquid argon and gaseous helium has been investigated. Precise temperature control and care in purification were required. Alpha and gamma sources were used. A variety of mixture ratios of argon and helium were tried. The scintillators were found to be insensitive to gamma rays relative to alphas. Scintillations were not detected in liquid argon but only in the gas. Neutron 4π spectroscopy with these scintillating gasses is discussed.

ARGON-HELIUM SCINTILLATION

Theodore Jenkins and Roger Wallace

Lawrence Radiation Laboratory
University of California
Berkeley, California

October 24, 1962

I. INTRODUCTION

The possible use of helium scintillators as neutron detectors makes helium scintillation of interest. While many reports have been written recently about noble gas scintillators, not much has been said about helium scintillation alone. Helium has two drawbacks for use as a scintillator: (a) high pressures are needed to stop particles in the low density gas, and (b) the heavier noble gases, Xe and Kr, have a greater light output than helium. The latter drawback may be eliminated by using a mixture of Xe and He.

Nobles reported that noble-gas scintillators, besides having good light output, are linear in response.[1] Huddleston[2] and Sayres[3] noted the insensitivity of gas scintillators to γ rays. Noble-gas scintillations are very fast, having a rise time less than 1 μsec. Thus a helium-scintillation neutron detector would be of great value in the areas of mixed γ and neutron or charged-particle radiation found around most accelerators.

A counter designed for use with a noble gas has been constructed for investigation of scintillations from argon, helium, and from mixtures of the two gases. The counter is used at pressures up to 10 atm, and to investigate scintillations at lower temperatures. (Northrop reported on the greater light output of noble gases in their solid and liquid states[1].) The counter is designed to hold the gas--in this case, argon--in a liquid state. We were unable to detect any scintillations from argon in the liquid state, however.

II. SCINTILLATION COUNTER

The scintillation counter is used primarily to study the scintillations from He and from argon. It was designed to withstand pressures up to 10 atm, so that pressure and temperature effects on noble-gas scintillation can be studied. Argon can be contained in the liquid state at these pressures and its scintillations observed.

Figure 1 is a cutaway view of the scintillation counter. The counter is constructed of steel, and can withstand pressures greater than ten atm; a safety valve, set to release at 160 psi, protects the counter from greater pressures. The valve consists of a metal ball spring loaded into a metal seat. There are no organic materials within the valve itself. A pressure gauge, with a range from 0 to 300 psi, measures pressure within the counter. Also in the line is an ion gauge to indicate values of the vacuum during pump-down periods; the ion gauge is disconnected whenever there is pressure within the chamber.

There are two counter bases, one cylindrical, and one hemispherical. The former, about 1.5 liters in volume, is coated with an aluminum-oxide scattering surface. The hemispherical base, about 1/3 liter in volume, is initially coated with an aluminum reflective coat; later with a film of MgO. The source is mounted on a stainless steel screw holder. The distance of the source from the phototube can be varied by using different length screws. Both counter bases are jacketed with Sauereisen No. 29 low-expansion cement imbedded with Nichrome heating wires. These wires are used only during work involving liquid argon.

Because the light emitted from the scintillation of noble gases lies in the ultraviolet region, the window must transmit light within this region. A waveshifter, such as P-quaterphenyl or Diphenyl-stilbene, will bring ultraviolet light into a region visible to a phototube with an S-11 response. As we wished the counter to be completely free of all organic materials, a quartz window was adopted. This eliminates the need for a waveshifter in actual contact with the scintillating gas. There are four ports in the area immediately below the window. Two ports are for gas entry and gas exhaust, the other two are for a liquid-level wire and three thermocouples.

Lead gaskets seal the window and the counter base. These gaskets fit into grooves cut into the steel. One W shaped groove is cut into the plate below the lower face of the quartz window. Such a groove takes advantage of the excellent sealing obtained from a knife edge. The lead gasket on the upper face of the quartz window acts as a cushion, and is not intended as a vacuum seal. A pressure of 150 in.-lb was applied to the compression bolts over a 2 h period, and retightened 24 h later. The lower gasket, between the counter base and the ports, fits into a double W groove. The flanges around the groove are tightened to a pressure of 30 ft-lb within a 20 min period. The gaskets around the quartz window were not changed, the base being removable without disturbing this window. A pressure of 3×10^{-6} mm is attainable with this system. Figure 2 is an enlarged view of the gasket grooves, quartz window, and port.

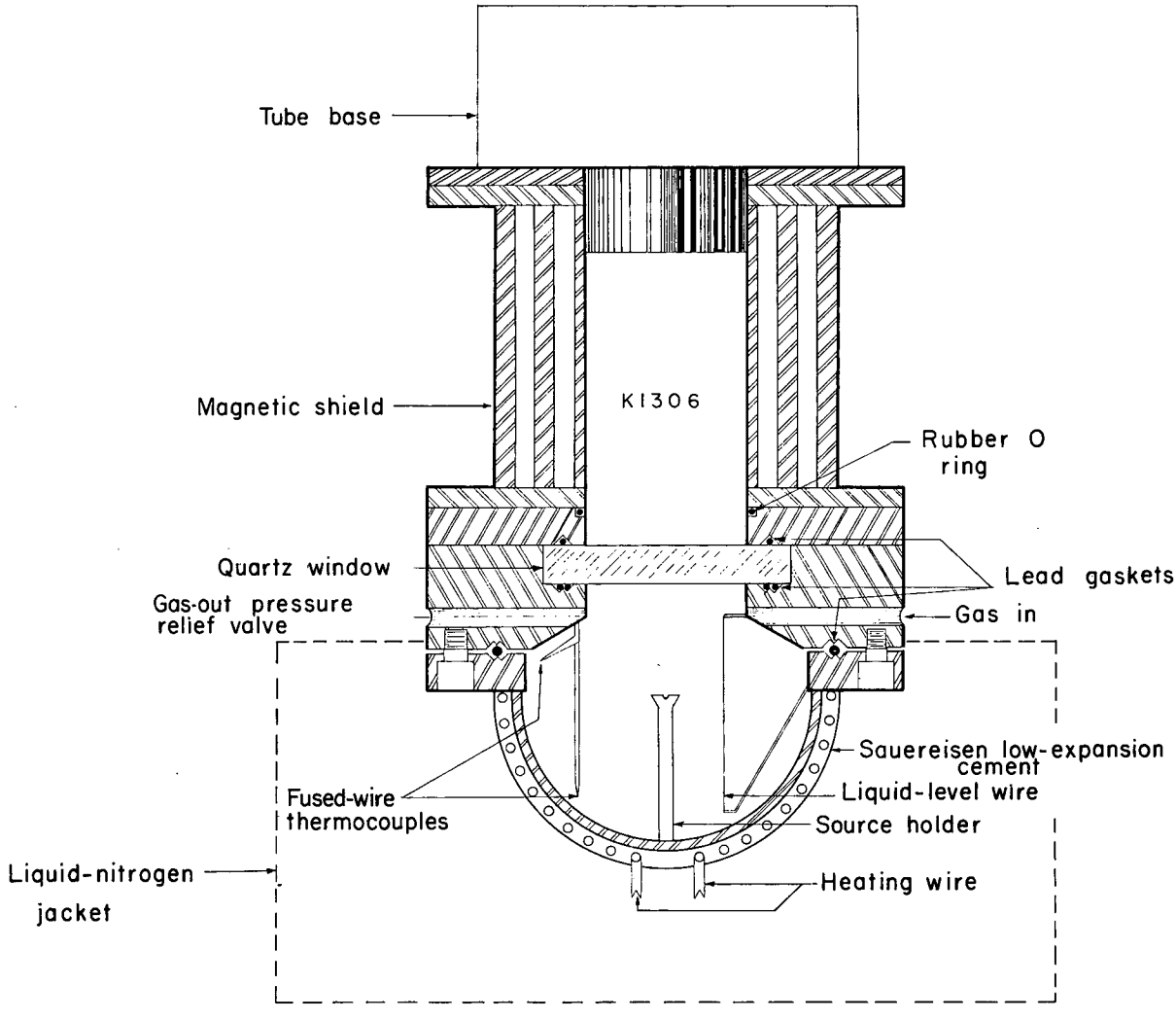

MUB-1440

Fig. 1. Gas scintillation counter with hemisphere base used with gas pressures to 165 psia and for noble gases in the liquid state. Quartz window eliminates need of wave shifter.

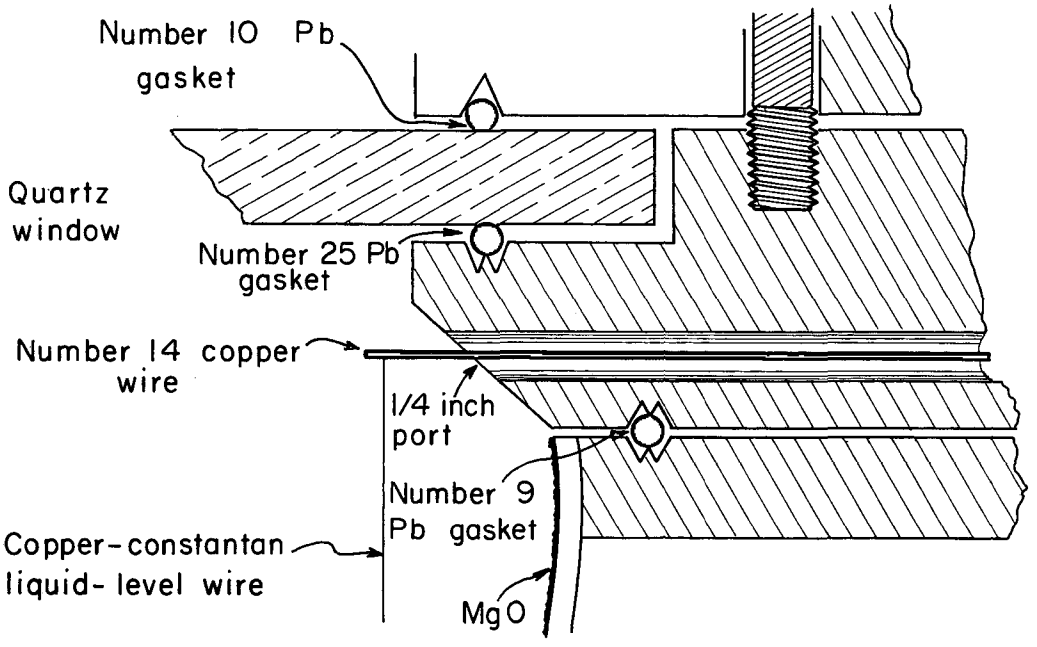

MU-28621

Fig. 2. Gasket grooves: the No. 25 Pb gasket is used as a vacuum seal; the No. 10 Pb gasket acts only as a cushion for the quartz window. The only gasket changed frequently is the No. 9 gasket. Pressures less than 10^{-5} mm Hg were achieved with this system.

Two phototubes, a quartz end-window DuMont K 1306 and an RCA 6655 with waveshifter, were used interchangeably. The waveshifter does not come into contact with the gas being investigated. Dow-Corning 200 fluid, viscosity of 1000 centistokes, was used as an optical coupling between the phototube face and the quartz window. It was found that an extremely thin film of this fluid, when subjected to the temperatures used during the liquid-argon phases of the experiment, would retain its optical clarity, while a thicker film or a higher viscosity Dow-Corning fluid, or other materials, tended to shatter, and turn opaque.

Three concentric iron rings surround the phototube, acting as magnetic shields. The entire upper half of the counter is then surrounded by a styrofoam jacket for thermal insulation during the cooling experiments.

III. LIQUIFYING SYSTEM, PURIFICATION SYSTEM, AND ELECTRONICS

There are three thermocouples inside the counter base. Two of the thermocouples are used to measure temperature inside the gas volume. The reference junction, 0°C, is placed in ice water outside the counter. Temperatures are read from a Leeds and Northrop galvanometer. The third thermocouple is used in conjunction with a 100 μV, Speedomax recorder, which controls the current through the counter-base heating wires. With the counter base immersed in liquid nitrogen, (-195° C), the heating wires are necessary to maintain argon at liquid-argon temperatures. At 1 atm pressure, the melting point of argon is -189.2°C; the boiling point, -185.7°C. Argon must be held within a 3.5°C range in order to keep it in the liquid state. The Speedomax recorder and the Nichrome heating wires keep the argon well within this range. To ensure greater sensitivity, the reference junction is immersed in liquid nitrogen. Thus a small change in argon temperature produces a greater voltage difference to be sent to the controller. (Figure 13 in the Appendix shows temperatures at which the noble gases liquify for different pressures.)

Copper-constantan, and later, iron-constantan wires were used to measure temperatures inside the counter. The junction of the two metals was first soldered. It was found that this is unsatisfactory, as the junction tends to open or read incorrectly after once being cooled. The wires were then fused, and the troubles eliminated.

The liquid-level wire is a 3-mil phosphor-bronze wire soldered to a No. 14 copper wire and is used in conjunction with a bridge circuit. The phosphor-bronze changes resistance with a change in temperature. The level of the liquid argon can be read directly from a meter associated with the bridge circuit.

As the level of the liquid rises, the phosphor-bronze wire tends to contract. If provision is not made for this contraction, the 3-mil wire will break. One solution has been to solder a small spring to the end of the phosphor-bronze wire. However, we did not find this necessary. The No. 14 copper wire has enough spring to absorb the contraction, thus eliminating the need for a special spring. Figure 3 shows the electrical circuits of the liquid-level indicator along with the thermocouple circuitry.

To ensure gas purity, a stainless steel trap capable of withstanding high pressures is filled with calcium filings and heated to 400°C. The desired temperature is maintained inside the trap by a Model-J Gardsman controller. A fused-wire thermocouple measures the temperature at the surface of the trap. Purified gas is then circulated through the scintillation counter by the action of a small compressed-air-operated diaphragm pump. The pump, shown in Fig. 4, consists of a metal diaphragm oscillated by a small motor and compressed air. Air is introduced and exhausted during 90° revolutions of the shaft that is connected to the small motor. Both intake and exhaust pressures are controllable. Thus, the pump diaphragm can be set to operate at + or - 15 psi from any given internal gas pressure.

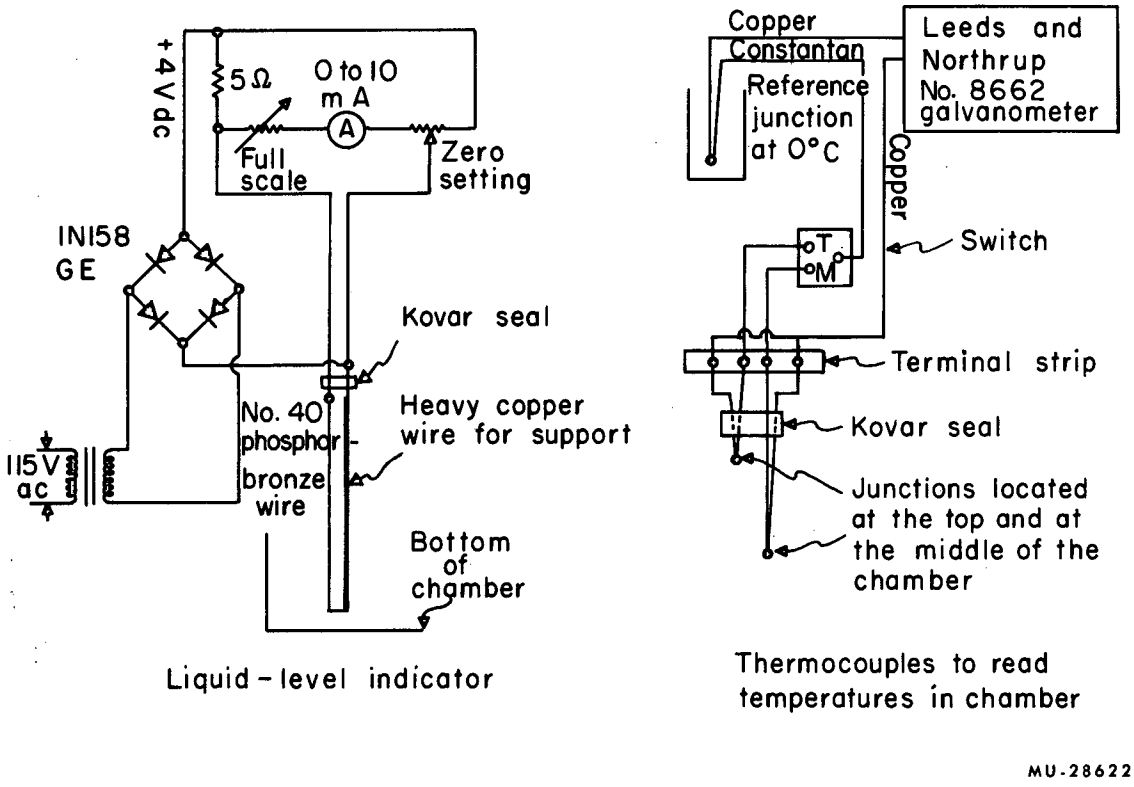

Fig. 3. Liquid level indicator and thermocouple circuitry.

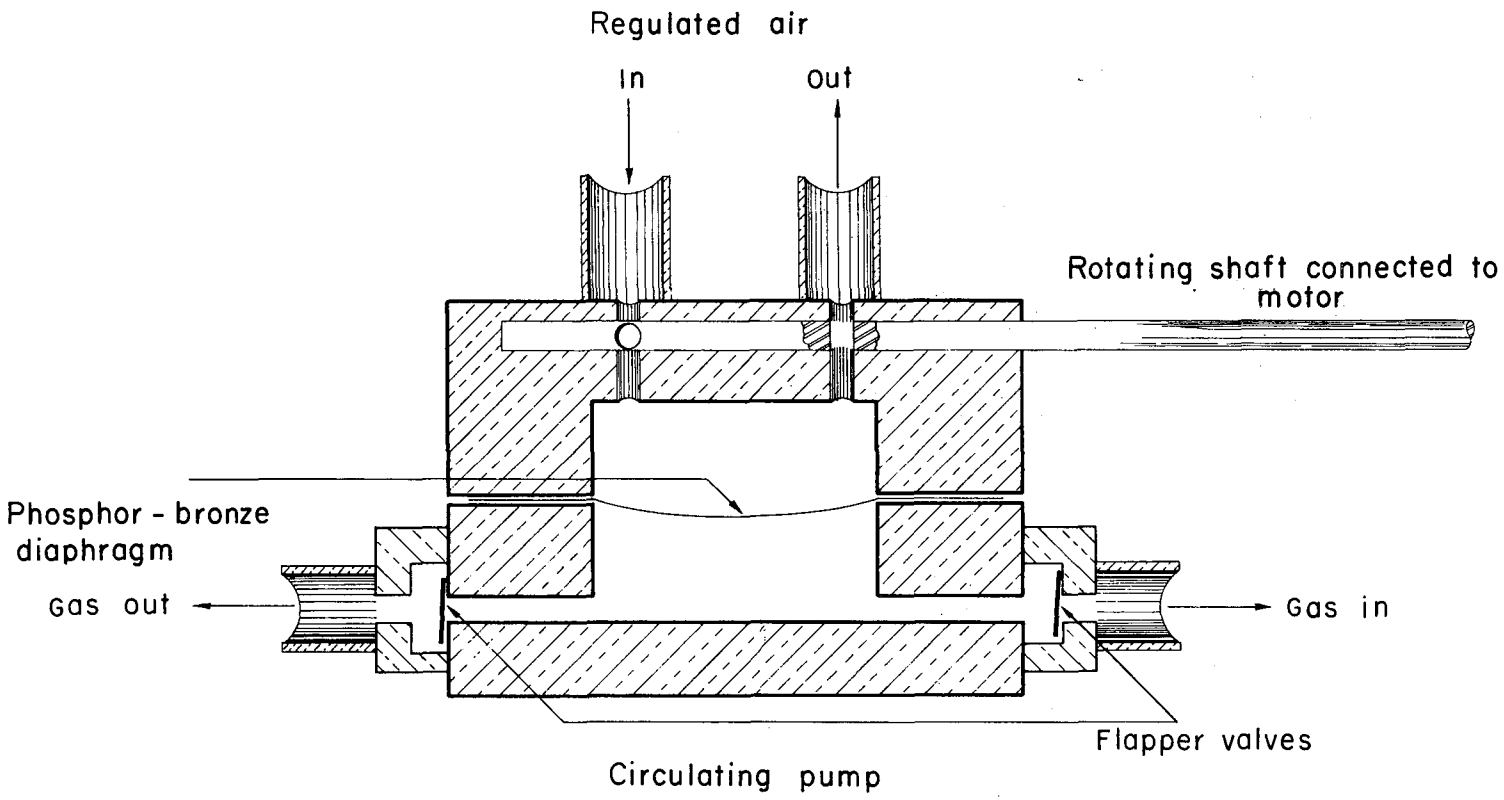

MUB-1441

Fig. 4. Circulating pump: air operated diaphragm oscillating at 3600 rpm gives a flow rate of 900 cc/min used to circulate noble gas during purification and mixing at pressures from 0 to 65 psi.

The pump is also used to facilitate mixing of argon and helium during some operations. Flow-rate is measured on a Fischer and Porter Flowrator, and controlled by opening a needle valve. A flow rate of about 900 cc/min is used. Figure 5 is a schematic flow diagram of the Ca trap, circulating pump, and associated circuitry.

A low-noise preamplifier is used in conjunction with a UCRL Model 5 Amplifier. Pulses are then analyzed on either of three different pulse-height analyzers; a 12-channel PHA, a 50-channel PHA; or a small Atomic single-channel PHA, depending upon location of the scintillation counter.

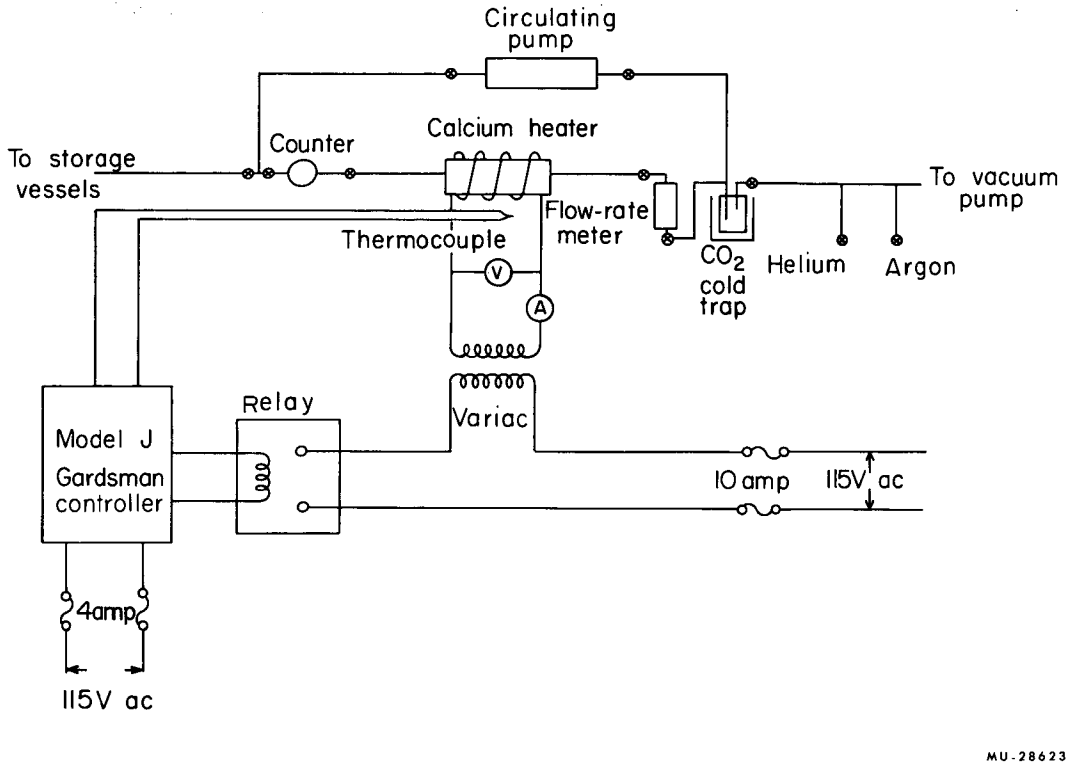

Fig. 5. Gas purification system with associated controller to keep calcium trap at 600°C.

IV. COUNTER EFFICIENCY

A. Light Collection

A Cm^{244} alpha-emitting source was placed at various distances from the quartz window inside the hemisphere base. Pressure is held at 75 psig, enough to stop the alpha particles in all positions of the source holder. For these runs, two source holders are used, one a platinum disc, and the other a thin platinum wire. The diameter of the disc is approximately 1 in. with the source electroplated to the top side; the diameter of the wire is 1/32 in. with the source on the tip. The disc is large enough so that, at the pressure used, no light may escape below the disc. When the disc source is placed near the quartz window, the light strikes the window and the uncoated portions of the counter, but not the coated portions. Little light can reach the MgO coating until the source has been lowered over 1.5 in. from the window. Below this point, some light begins to scatter from the MgO coating. The second source, takes advantage of the scattering MgO coating in all positions. Figure 6 is a graph of pulse height vs distance from the quartz window for both sources. The rapid decrease from the disc source as the source is moved away, shown in Curve A, is probably due to the absorption of the light by the uncoated walls. That is, as the source is lowered, the source "sees" more of the uncoated walls. After 1.25 in., the curve levels out to about 50% of its original value. Curve B, obtained from the wire source, gradually decreases to 58% of its maximum pulse height. This decrease is probably due to absorption of the light by the uncoated areas, but is more gradual because there is some light scattering in all positions of the source.

B. Poisoning

Helium gas was counted directly from a commercially available bottle, then passed once over Ca filings heated to 400°C, and lastly, passed continuously over the heated filings. Pulse height increases only slightly with one purification, and continued purification did not further affect pulse height. However, the purified He has a much slower rise time than unpurified He. Rise time of the purified gas is of the order of 0.5 μsec, much slower than the 1 μsec previously reported. Such an effect was noted at Los Alamos, though no explanation has been given.[7]

Argon, placed in the counter, was counted and then allowed to stand for two weeks, being counted at various intervals. Over this period, pulse height remains constant. Thus the counter may be assumed to be free of any poisoning.

C. Waveshifters

A DuMont Quartz-end window phototube was used initially for all experiments. However, the quartz window in the counter itself eliminates the need of a special quartz-window phototube. Consequently, an RCA 6655 phototube was also used with two different waveshifters. The waveshifters, P-quaterphenyl and Diphenyl-stilbene, were evaporated on the face of the phototube, 75 mg/cm^2 thick, and worked well at liquid-nitrogen temperatures. One of the two waveshifters used, the P-quaterphenyl gave a slightly higher pulse height.

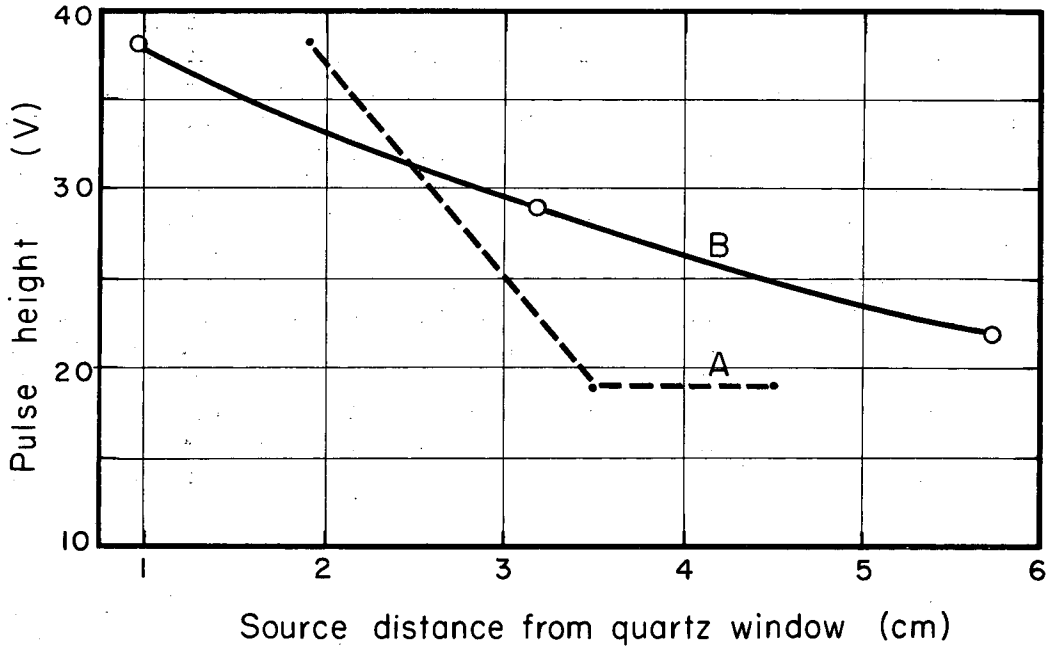

MU-28624

Fig. 6. Pulse height vs source distance from quartz window: curve A was taken using the disc-cm source which prevents light from reflecting from MgO coating until approx. 3 Cm from window; curve B, taken with wire cm source, shows a more gradual decrease. Curves give an idea of counter efficiency.

D. Tube Noise

With scintillations from the noble gases that produce less light, tube noise could become a definite factor. Initially, we investigated tube noise (dark current) by leaving a vacuum within the scintillation counter. Dark current is observed to decrease radically within the first half hour, and then begins to level off after about three hours to a value where changes were reasonably small. This phenomenon occurred whenever high voltage was turned on after having been off for long periods of time, i.e., more than a day.

Figure 7 shows tube-noise decrease as the tube is cooled. The counter, with a vacuum inside, is slowly cooled by immersion in a liquid-nitrogen jacket. Temperatures are measured inside the scintillation counter itself, and not at the phototube; consequently, the temperature range is only relative to the values shown.

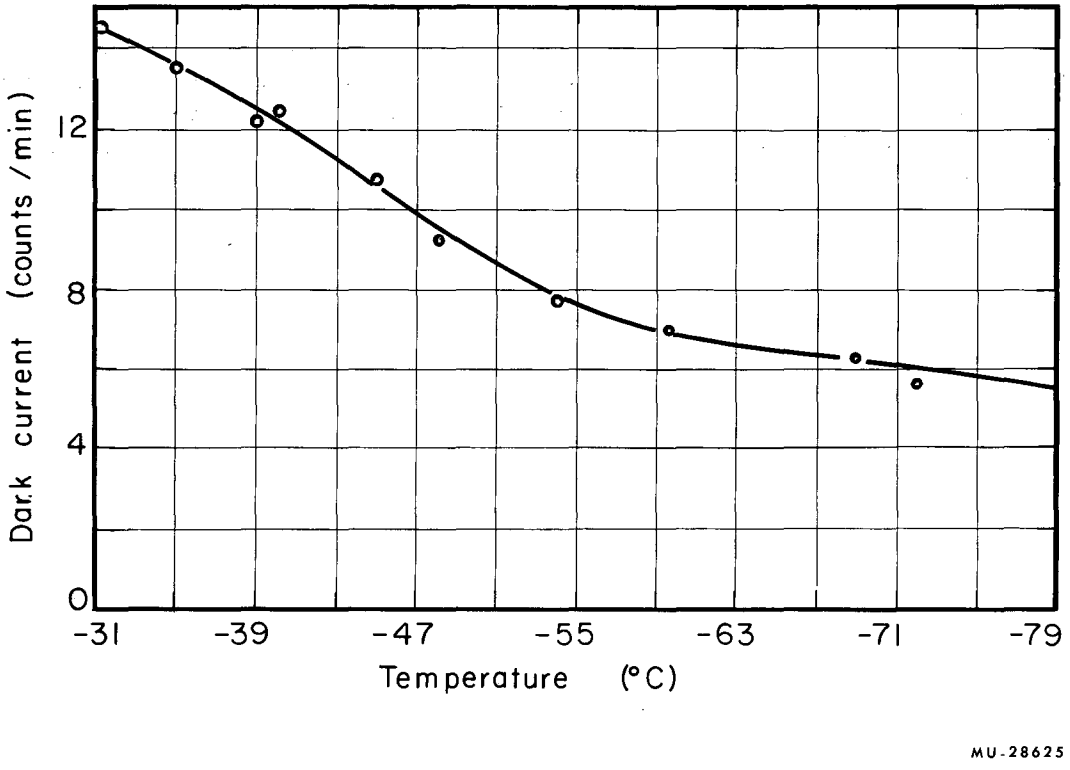

Fig. 7. Temperature vs dark current: temperature was taken inside the counter base, and is not the temperature of the phototube itself.

V. SCINTILLATIONS FROM ALPHA AND GAMMA SOURCES

A. Effects of Pressure

Pulse height was investigated for pressures from 5 to 140 psi. These high pressures are particularly necessary when using helium in order to completely stop the charged particles, in this case alphas, within the gas volume. The range of a 5.8 MeV alpha particle in helium varies with pressure, from about 2.25 cm at 1 atm, to less than 0.33 cm at 8 atm (see Appendix for Range-Energy tables). Figure 8 shows typical pulse curves for four pressures. Pressures below 35 psi are not large enough to contain the alpha particles within the noble gas volume, and pulse height drops rapidly. Above 35 psi, pulse height begins to drop slightly. This decrease is most likely due to a change in geometry, i.e., as pressure is increased, the source is effectively moved away from the phototube. At 140 psi, pulse height has decreased approximately 8%.

B. Temperature Effects

During some runs, the counter was cooled from room temperature to -168°C, at which temperature and 5 atm pressure, argon liquifies (see Fig. 15 in Appendix). Figure 9 is a curve of the increase of pulse height with decreasing temperature. There is a gradual increase in the range between +20 and -130°C. The rapid increase below -138°C is to be expected if some of the argon is beginning to liquify on the walls of the counter, giving the greater light output expected from liquid argon. However, when the argon rises to a level such that it just covers the source, pulse height immediately disappears. Upon boiling away enough liquid to once again re-expose the source, pulse height reappears at the value given at -168°C. We assume that the scintillations in the range from 20 to -168°C are from the gas and not from any liquid in the counter. There is the possibility that the liquid argon scintillates, but the light does not reach the phototube due to the light not escaping the surface of the liquid. Consequently, we invert the counter in a position so that the liquid forms first on the quartz window, and then rises to cover the source. The results are the same for this position, as in the normal position. This rules out any light being trapped in the liquid. A visual examination of the liquid shows it to be completely clear, with no surface frosting that might affect light transmission. These tests were repeated many times with the same results. We can only conclude that, in these instances, argon does not scintillate.

The temperature curve for helium, also shown in Fig. 9, follows a gradual increase without the rapid rise seen with argon below -138°C. The helium curve did tend to drop as the temperature was lowered, though not to the value found from liquid argon. This eliminates the possibility that the phototube itself was too cold in the region below -168°C, and not functioning properly.

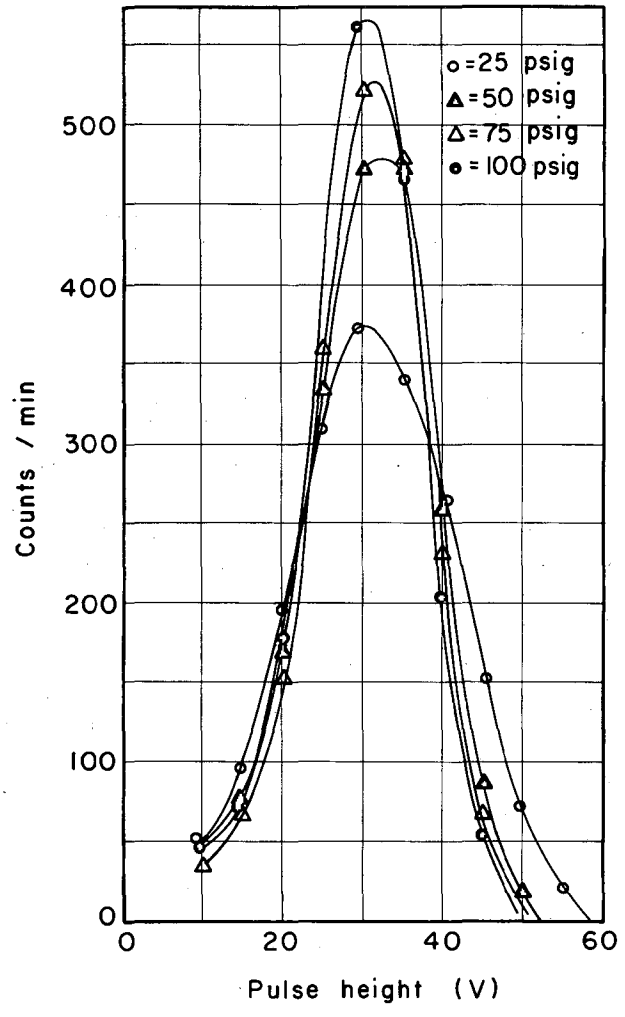

MU-28626

Fig. 8. Typical pulse height analyzer curves for argon for different pressures: pressures below 25 psig are not great enough to stop the alpha particles from the Cm source.

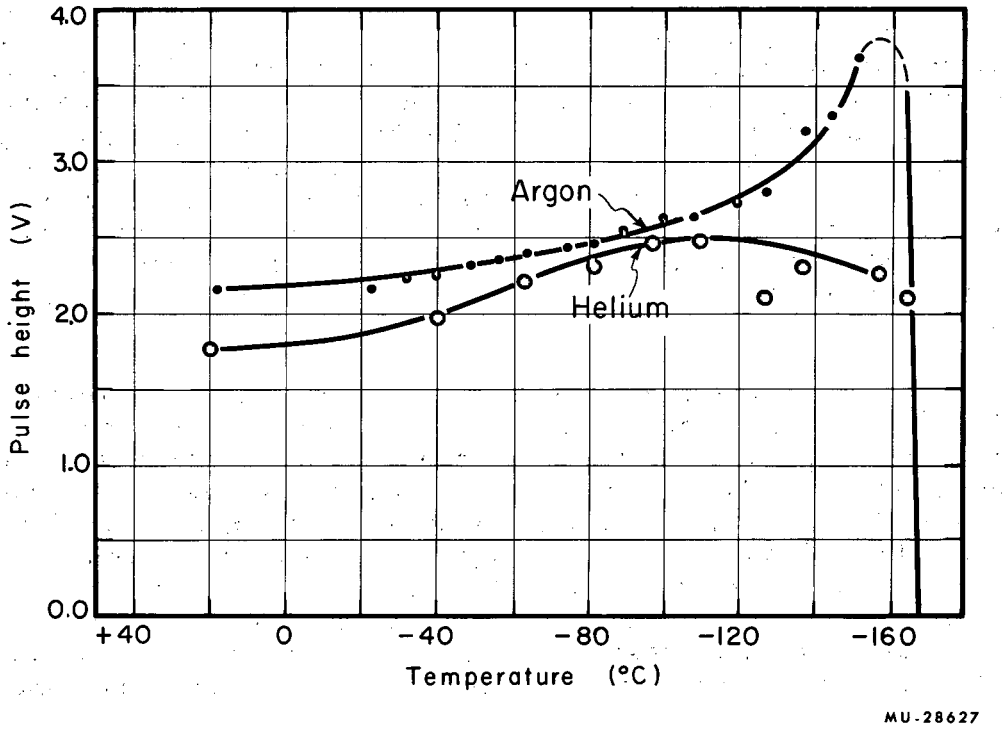

Fig. 9. Pulse height vs temperature: the argon curve shows a gradual increase in the temperature range to -135°C. Between -135 and -168°C there is a sharp increase, due to liquid forming in the container bottom. When the liquid covers the source, pulse height disappears (-168°C). The He curve shows only a gradual increase to -120°C followed by a slight dropoff.

C. Gamma Sources

A 2-mg Ra source and a Na^{22} source, both gamma emitters, were placed near the counter, and collimated. Pulse height from both sources is insignificant, nothing being observed from the Na^{22} source, and only a small pulse coming from the Ra source.

D. Mixtures of Argon and Helium

Argon and helium were mixed in various percentages. Initially they were introduced into the counter through two three-foot lengths of 0.75-in. diam flexible copper tubing. The mixture was then allowed to stand for short periods of time. The gas mixtures were counted after 3, and then 10 min static mixing time. Results are such that it is suspected that mixing was not taking place. A different pulse height results, depending upon which gas is introduced first. Waiting 24 hours and then counting does not resolve the problem. Suspecting that the gases were not mixing in the counter, we substituted the 3-ft lengths of tubing from the bottles to the counter by two 12-in. lengths leading directly into the scintillation counter, bypassing the Ca trap, pre-cooler, and other lines. However, the results are the same as before.

The circulating pump was then incorporated, with a flow-rate of 1000 cc/min, as read on the flowmeter in the line. Readings were taken before the pump was turned on, and then at 5 min intervals. Using this method, pulse height varies according to which gas is introduced first. If the gas with the lower percentage by pressure is introduced first, pulse height is low. If the gas with the higher percentage by pressure is introduced first, pulse height is some higher value. We can only assume that, for some reason unknown to us, mixing does not occur properly. As pulse height decreased in all cases, further investigations were deemed unnecessary. Figure 10 shows the results for both static and dynamic mixing.

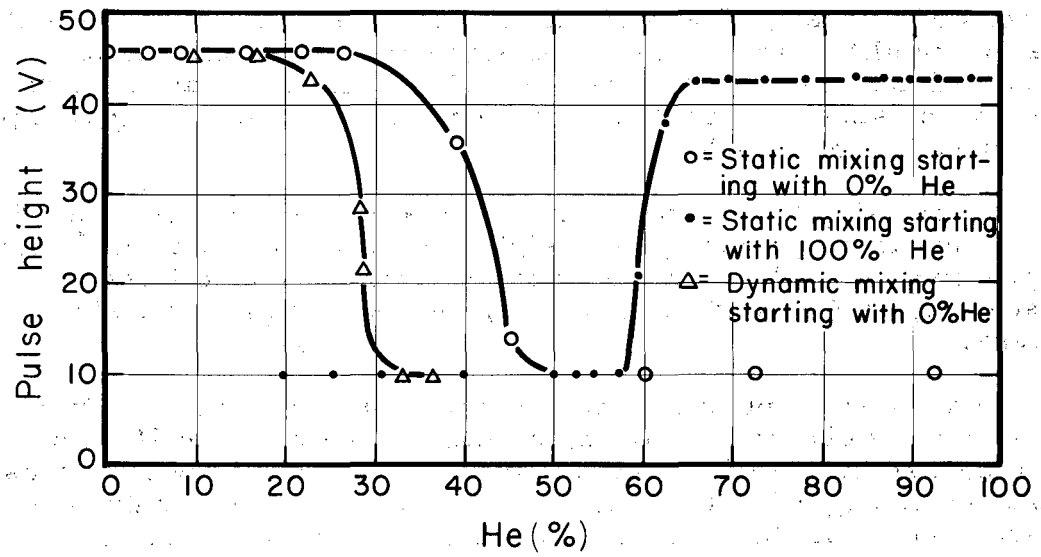

MU-28628

Fig. 10. Pulse height for mixtures of argon and helium: gases are introduced into counter and allowed to stand for the static mixing curves. For the dynamic mixing curves, the circulating pump was employed. Mixing times were varied without changing the curves.

VI. NEUTRON DETECTION

We are interested in helium scintillation primarily for use in neutron detection. There are two suggested ways in which a He gas scintillation counter may be employed as a neutron spectrometer. The first employs He^3 as the scintillating gas. In a counter filled with He^3, one measures the total energy released in the reaction, $He^3 \pm n \rightarrow H^3 + P + 770$ keV. The pulse measured in the counter corresponds directly to the energy of the incident neutron, below about 1.03 MeV. Above this energy, elastic collisions between the neutron and the He^3 nucleus add ambiguity to the resultant spectrum. Batchelor[4] has used this reaction in a proportional counter to measure neutron energies up to 1 MeV. The recoil spectrum of He^3 from neutrons of an energy E extends from zero to an energy $E' = 3/4\ E$, with equal probability that the energy be anywhere within this region. Thus, a recoil of maximum energy from a 1.03 MeV neutron cannot be distinguished from an He^3 slow neutron disintegration, that is, they both give a pulse corresponding to 770 keV.

When using He^3 scintillations, a mixture of 90% He^3 and 10% Xe is used. This increases the pulse height over that from pure He^3 alone; also the presence of the heavier Xe tends to minimize wall effects. Because of the scarcity of He^3, and its high cost, an elaborate gas transfer system is necessary.

In a second application, the elastic scattering of the neutron from the He^4 nucleus is observed. Again, a mixture of 90% He to 10% Xe is used. The recoil spectrum of He^4 atoms for neutrons of energy E extends from zero to an energy $E' = 16/25\ E$. For use with discrete neutron energies, the spectrum could be analyzed both as to energy and to number of incident neutrons. A source of monoenergetic neutrons of energy E produces a differential bias spectrum as shown in Fig. 11, that ideally is a rectangle extending from zero energy to 16/25 E. The integral bias curve from such a spectrum is a straight line.

It becomes formidable to determine the incident neutron spectrum given any unknown differential or integral bias spectrum made up of many different neutron energies. However, the number of neutrons above the energy threshold of the counter may be determined by extrapolating the integral bias curve to zero bias. An uncertainty arises from this extrapolation.

The counter was filled with He^4 gas without mixing with Xe. Thus, we had a poorer gas response than desired. The 2 MeV and 14 MeV neutrons from a pulsed neutron generator were used. Maximum recoil energy of an He^4 nucleus from a 2 MeV neutron is about 1.28 MeV. The energy threshold of the counter using He as the scintillating gas is above this. Thus we were unable to detect 2 MeV neutrons from a D-D source.

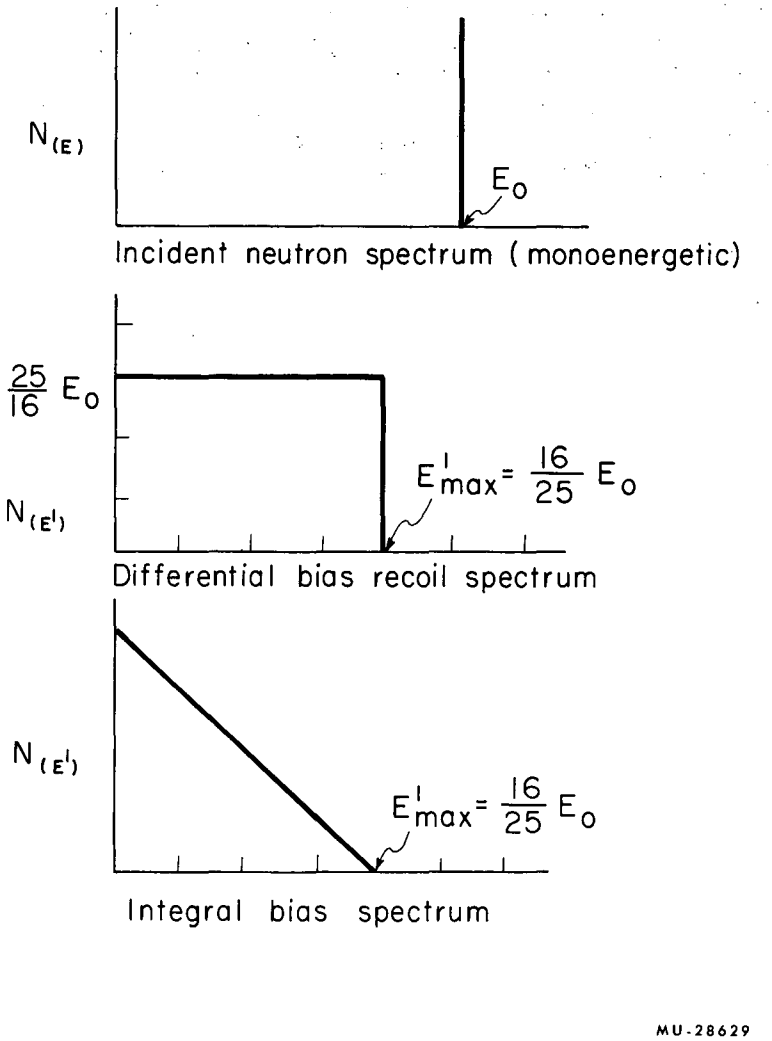

Fig. 11. Theoretical neutron spectrum for neutron scattering on He^4.

An attempt was made to count He^4 recoils from 14 MeV neutrons using a D-T generator. However, iron has an N, P cross section of about 100 mb at 14 MeV. The threshold for this reaction is about 6 MeV. The contributions from (n, P) protons must be taken into account when a steel counter is used in a beam of energies greater than 6 MeV. The counter is filled to 90 psi, and placed in the beam of 14 MeV neutrons. The resultant integral spectrum is shown in Fig. 12. For three different amplifier gains, the count rate is quite high, even when we use helium only, suggesting that such a counter filled with a He and Xe mixture may be of value in neutron detection.

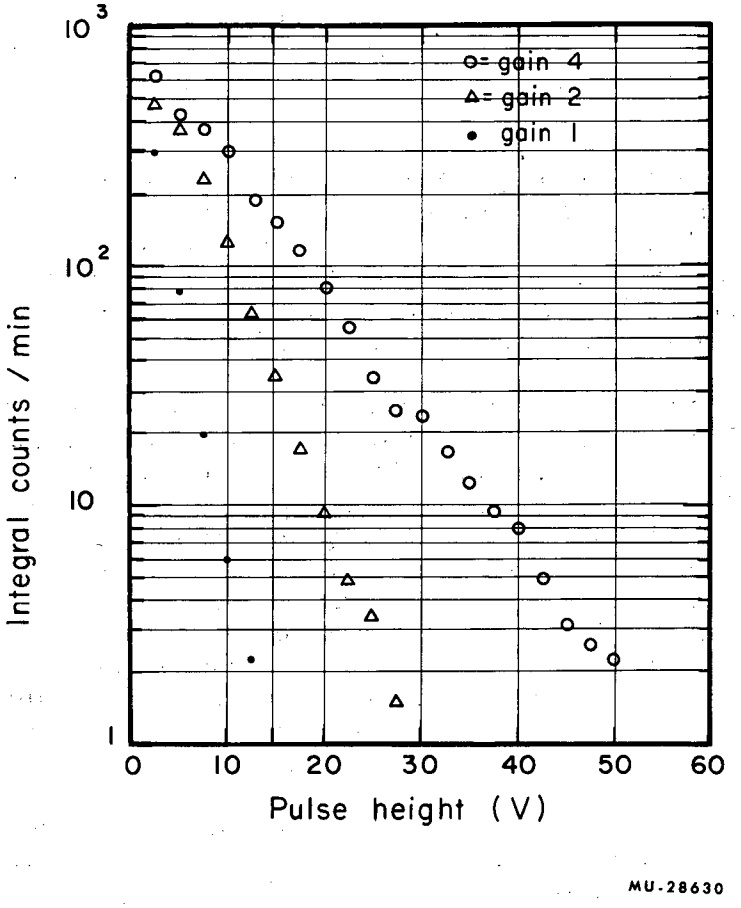

Fig. 12. Integral bias curves (at three different gains) from 14 MeV neutrons on He^4 gas.

VII. CONCLUSIONS

The scintillation counter described in this report was designed to study the scintillation from argon (liquid and gas) and from helium gas. It was at no time conceived of as a useful tool in itself for measuring external radiation. The careful choice of all inorganic materials ensures a poison-free counter that can be viewed with either a quartz end-window phototube, or a conventional tube with waveshifter. Because a portion of the counter was left uncoated with MgO, light-collection efficiency was not as high as desired.

Pressures above 35 psi are used in order to stop the 5.8 MeV alphas from the internal source. Pulse height decreases only 8% in the range from 35 - 140 psi. This decrease may be attributed partly to the source being effectively moved away from the window as pressure is increased. There were only small pulses from γ's confirming the insensitivity of noble gas scintillators to γ rays as previously noted.[2, 3]

An increase in pulse height is noted as argon and helium are cooled toward liquid nitrogen temperatures. Pulse height drops in the -140 to -160°C region for helium, while there is a sharp increase in pulse height for argon in the same region. When argon, which liquifies at -168°C, (5 atm pressure,) covers the source as a liquid, pulse height immediately drops to zero. Upon boiling away enough liquid to re-expose the source, pulse height reappears. The liquid was examined and found to be clear. We can only conclude that argon does not scintillate under these conditions. As this occurred for many runs, more work is suggested on liquid scintillations to determine just how, or if, scintillation occurs in the liquid. Mixtures of argon and helium proved equally unsuccessful, all mixtures giving a pulse height less than either gas in its pure state.

Helium scintillation may be used for neutron detection. Two methods are described, one using neutron scattering from He^4, and the other using the reaction, $He^3 + n$ --- $H^3 + p + 770$ keV, using a mixture of Xe and He^3 a good count rate from neutron scattering on He^4 was achieved using 14 MeV neutrons. As the counter was not designed for actual neutron detection, no effort was made to calibrate it for such work.

ACKNOWLEDGMENT

We wish to thank Professor Burton J. Moyer for his help in this work.

REFERENCES

1. J. Northrop and R. Nobles, Nucleonics 14, No. 4 (1956) pp. 34-36.

2. Eggler and Huddleston, Nucleonics 14, No. 4 (1956).

3. A. Sayres and C. S. Wu, Rev. Sci. Instr., 28, No. 10 (October 1957).

4. R. Batchelor, Rev. Sci. Instr., 26, No. 11 (1955).

5. W. Barkas and A. Rosenfeld, Data for Elementary-Particle Physics, Lawrence Radiation Laboratory Report UCRL-8030 Rev., October 1, 1961 (unpublished).

6. E. Segrè, Ed., Experimental Nuclear Physics (John Wiley and Sons, Inc., New York, 1953).

7. R. Nobles, Lockheed Research Laboratory, Palo Alto, California (private communication).

APPENDIX

The range-energy curves were approximated by the method given by Barkas and Rosenfeld[5] for the range in g/cm^2 for a particle of charge Ze,

$$R = \frac{Z^{0.26}}{500\, z^2} \frac{T^{1.7}}{A^{0.7}} \quad g/cm^2,$$

where A is the mass number of the particle of kinetic energy T, in a stopping medium of atomic number Z (see Figs. 13-17 and Table I).

For Alpha particles, this is

$$R = 1.89 \times 10^{-4}\, Z^{0.26}\, T^{1.7},$$

correct to within 10% for T/A from 1 MeV to 400 MeV.

For protons, this is simply

$$R = 2 \times 10^{-3}\, Z^{0.26}\, T^{1.7}\,.$$

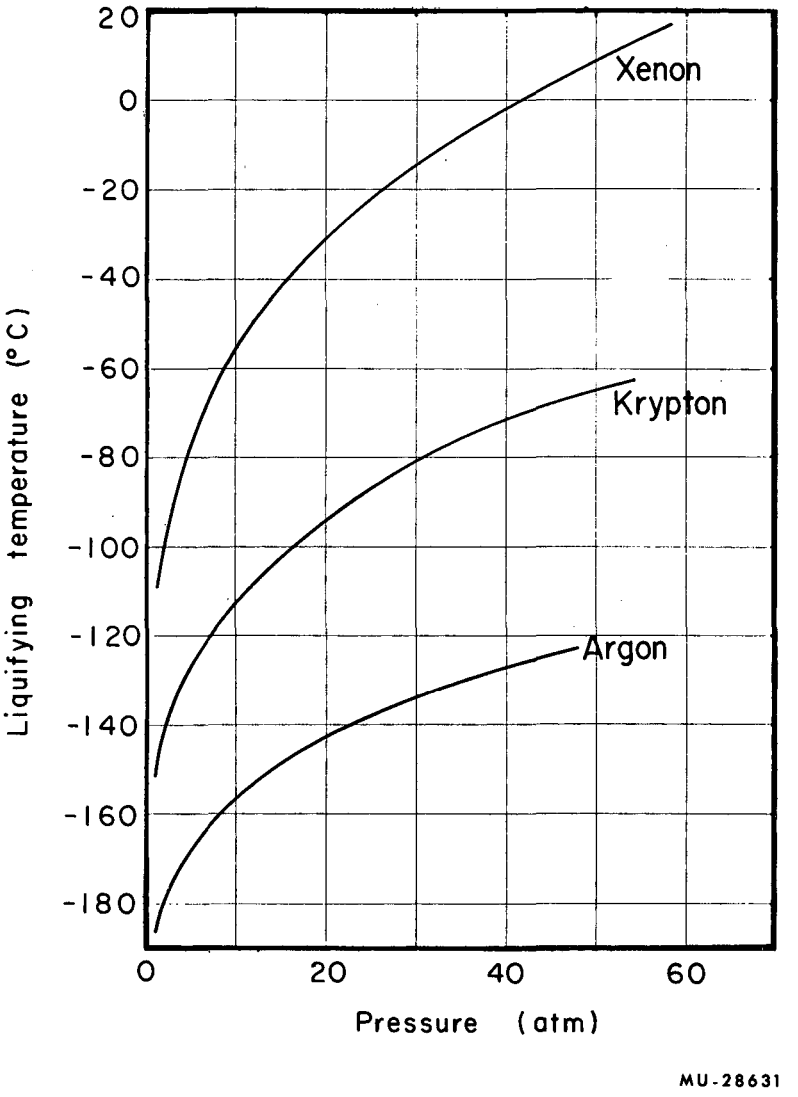

Fig. 13. Liquifying temperature-pressure curves for A, Kr, and Xe.

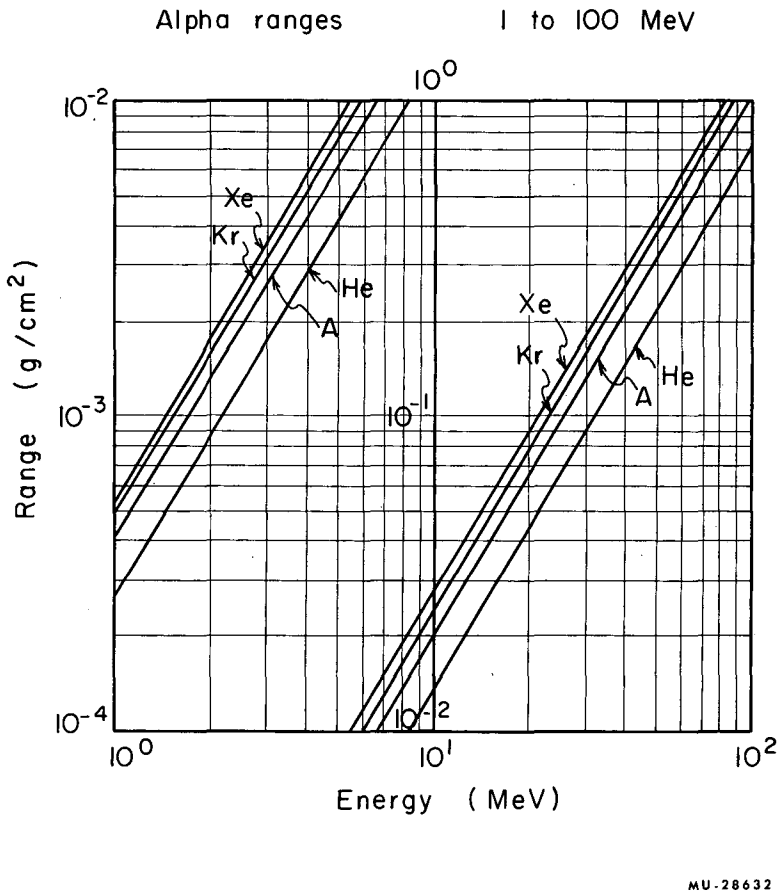

Fig. 14. Range-energy curves for the noble gases.

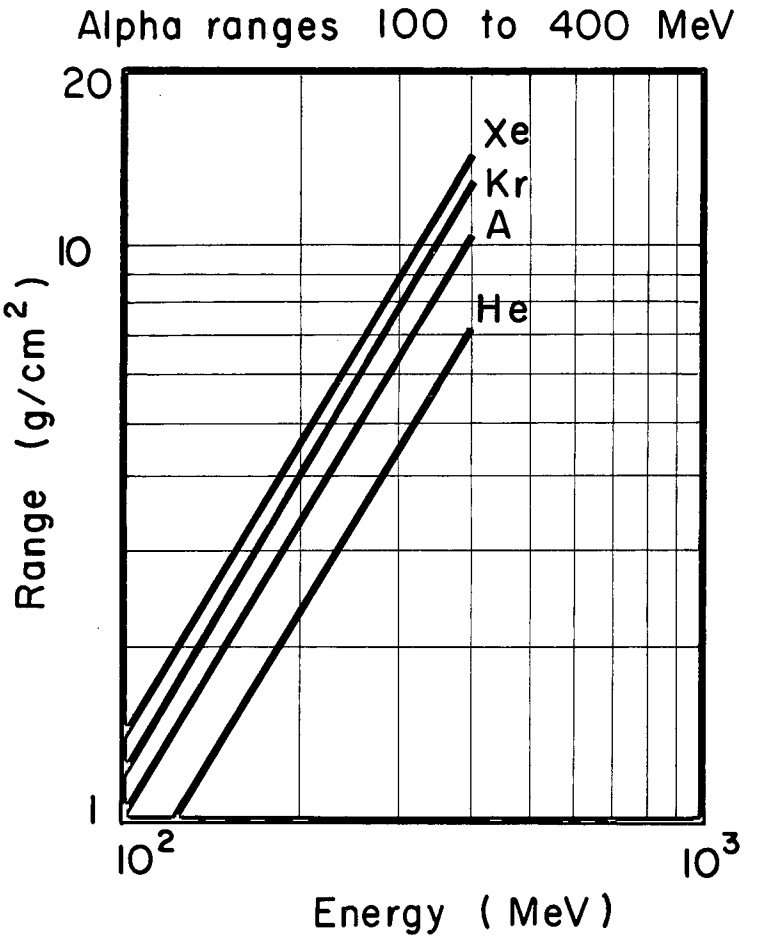

MU-28633

Fig. 15. Liquifying temperatures vs pressures.

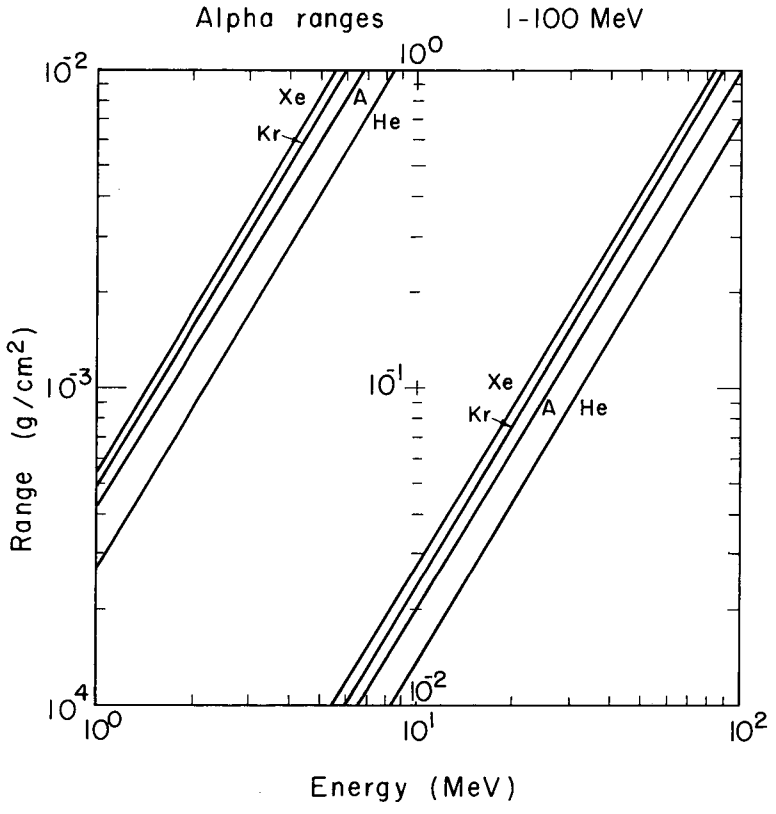

MU-28984

Fig. 16. Range energy curves: proton ranges.

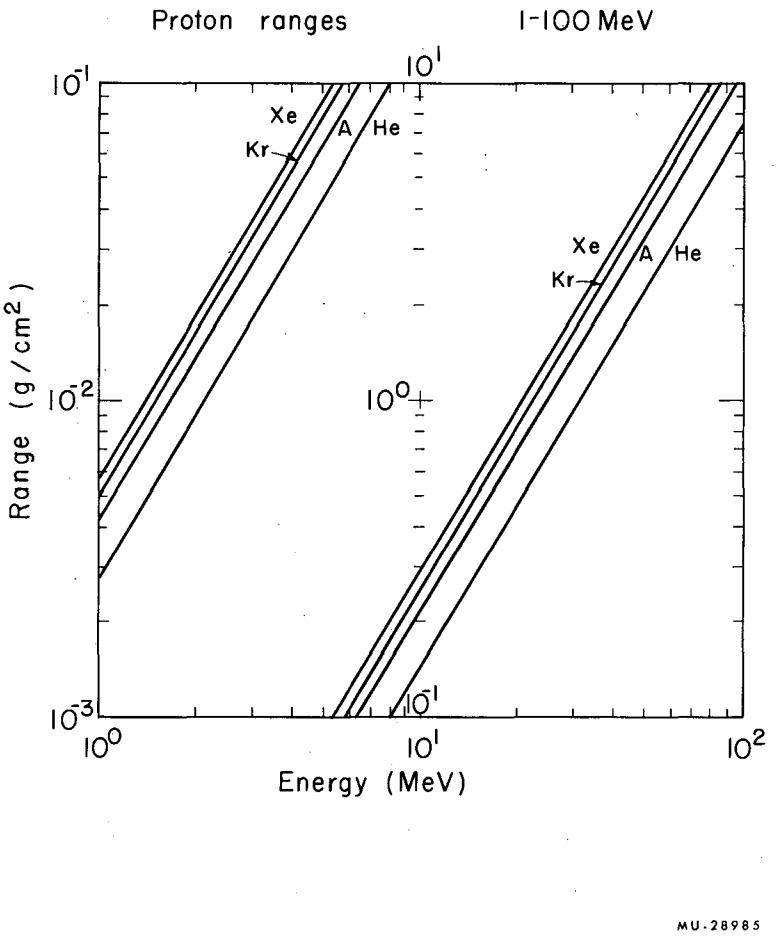

Fig. 17. Range energy curves: proton ranges.

Table I. Atomic and nuclear properties of A, He, Kr and Xe

	Z	A	P_{Gas} (g/L)	P_{Liquid} (g/cc)	$L_{Collision}$ (g/cm^2)	L (cm)	$L_{r(Gas)}$ (g/cm^2)	L (cm)	$L_{r\,(Liquid)}$ (g/cm^2)	L (cm)
Helium	2	4.003	0.17847	0.15	41.9	279	8.5×10^4	5.66×10^5	95.9 85 (Ref. 5)	639
Argon	18	39.944	1.7837	1.3845	90.3	65.2	1.6×10^4	1.16×10^4	19.7 19.4(Ref. 5)	14.2
Krypton	36	83.8	3.708	2.16	115.6	53.5	6.61×10^3	3.06×10^3	10.89	5.04
Xenon	54	131.3	5.851	3.52	134.1	38.1	5.17×10^3	1.47×10^3	8.17	2.32

Mean free path ($L_{Collision}$) is given by the expression $L_{Collision} = \frac{A}{N_0 \sigma_{natural}}$, where $\sigma_{natural} = \pi\left(\frac{h}{m_\pi c}\right)^2 A^{2/3} = 63\ \text{mb}A^{2/3}$; we have $L_{Collision} = \frac{A^{1/3}}{N_0 \pi \left(\frac{h}{m_\pi c}\right)^2} = 26.4\ A^{1/3}\ \text{g/cm}^2$ (see Ref. 5).

Radiation length (L_r) is given by the expression; $L_r = \frac{1}{4N\ \Phi \log 183\ Z^{-1/3}}$ (see Ref. 6), where

$\Phi = \frac{Z(Z+1)}{137}\left(\frac{e}{mc}\right)^2$, and is not corrected for failure of the Born approximation. The values are meant only to be approximations, and should be correct to within 10%.

This report was prepared as an account of Government sponsored work. Neither the United States, nor the Commission, nor any person acting on behalf of the Commission:

A. Makes any warranty or representation, expressed or implied, with respect to the accuracy, completeness, or usefulness of the information contained in this report, or that the use of any information, apparatus, method, or process disclosed in this report may not infringe privately owned rights; or

B. Assumes any liabilities with respect to the use of, or for damages resulting from the use of any information, apparatus, method, or process disclosed in this report.

As used in the above, "person acting on behalf of the Commission" includes any employee or contractor of the Commission, or employee of such contractor, to the extent that such employee or contractor of the Commission, or employee of such contractor prepares, disseminates, or provides access to, any information pursuant to his employment or contract with the Commission, or his employment with such contractor.