UCRL- 1055

UNIVERSITY OF CALIFORNIA — BERKELEY

TWO-WEEK LOAN COPY

This is a Library Circulating Copy
which may be borrowed for two weeks.
For a personal retention copy, call
Tech. Info. Division, Ext. 5545

RADIATION LABORATORY

DISCLAIMER

This document was prepared as an account of work sponsored by the United States Government. While this document is believed to contain correct information, neither the United States Government nor any agency thereof, nor the Regents of the University of California, nor any of their employees, makes any warranty, express or implied, or assumes any legal responsibility for the accuracy, completeness, or usefulness of any information, apparatus, product, or process disclosed, or represents that its use would not infringe privately owned rights. Reference herein to any specific commercial product, process, or service by its trade name, trademark, manufacturer, or otherwise, does not necessarily constitute or imply its endorsement, recommendation, or favoring by the United States Government or any agency thereof, or the Regents of the University of California. The views and opinions of authors expressed herein do not necessarily state or reflect those of the United States Government or any agency thereof or the Regents of the University of California.

UCRL-1055
Unclassified-Chemistry Distribution
Copy 2

UNIVERSITY OF CALIFORNIA

Radiation Laboratory

Contract No. W-7405-eng-48

DECLASSIFIED

THE PREPARATION AND SOME PROPERTIES OF AMERICIUM METAL

Edgar F. Westrum, Jr. and LeRoy Eyring

March 13, 1951

Berkeley, California

THE PREPARATION AND SOME PROPERTIES OF AMERICIUM METAL*

Edgar F. Westrum, Jr.** and LeRoy Eyring+
Radiation Laboratory and Department of Chemistry
University of California, Berkeley, California

February 9, 1951

ABSTRACT

Americium trifluoride prepared by hydrofluorination of the dioxide was reduced to metal on the 40 to 200 microgram scale by reduction with barium metal in a high vacuum microfurnace at 1100°C in various refractory materials. High yields of silvery, very malleable and ductile, metal globules were obtained. Reaction with hydrogen to form a hydride and measurement of hydrogen evolution upon dissolution in acid were further proof of the metallic state. The density was determined as 11.7 ± 0.3 g cm^{-3}. Its low value compared to that of its preceding elementary neighbors is in striking resemblance to the behavior of its lanthanide analog, europium. The heat of solution of the metal in 1.5 molar aqueous HCl was determined as -160 ± 4 kcal $mole^{-1}$.

---

*This research was performed under the auspices of the U. S. Atomic Energy Commission and was reported in University of California Radiation Laboratory, Chemistry Division Memorandums MB-IP-96 (July, 1946); MB-IP-97 (July, 1946); MB-IP-122 (October, 1946); MB-IP-165 (January, 1947); and MB-IP-170 (February, 1947). Presented at the 118th National Meeting of the American Chemical Society at Chicago, September 5, 1950.

**Present address: Department of Chemistry, University of Michigan, Ann Arbor, Michigan.

+Present address: Department of Chemistry and Chemical Engineering, State University of Iowa, Iowa City, Iowa.

THE PREPARATION AND SOME PROPERTIES OF AMERICIUM METAL

Edgar F. Westrum, Jr. and LeRoy Eyring
Radiation Laboratory and Department of Chemistry
University of California, Berkeley, California

Seaborg, James, and Morgan discovered americium in plutonium irradiated in the nuclear fueled reactor.[1-3] In a recent note[4] it is indicated that

(1) G. T. Seaborg, Chem. Eng. News, 23, 2190 (1945).

(2) G. T. Seaborg, Chem. Eng. News, 24, 1193 (1946).

(3) G. T. Seaborg, R. A. James, and L. O. Morgan, National Nuclear Energy Series, Plutonium Project Record, Vol. 14B, "The Transuranium Elements: Research Papers," Paper No. 22.1 (McGraw-Hill Book Co., Inc., New York, 1949).

(4) A. Ghiorso, R. A. James, L. O. Morgan, and G. T. Seaborg, Phys. Rev., 78, 472 (1950).

americium formed by the reaction

$$Pu^{239}(n,\gamma)Pu^{240}(n,\gamma)Pu^{241} \xrightarrow{\beta} Am^{241}$$

may be produced in milligram amounts by intense radiation of large quantities of plutonium. The isolation of americium in a relatively pure state was first achieved by Cunningham who obtained a few micrograms of 99% pure material.[5]

(5) B. B. Cunningham, National Nuclear Energy Series, Plutonium Project Record, Vol. 14B, "The Transuranium Elements: Research Papers," Paper No. 19.2 (McGraw-Hill Book Co., Inc., New York, 1949).

The solution chemistry has been studied by Cunningham and others, and the work of Fried[6] at the Argonne National Laboratory has indicated marked formal

(6) S. Fried, J. Am. Chem. Soc. 73, 416 (1951).

analogies of the simple crystalline compounds to those of the rare earths as

well as isomorphism with some of those of the transuranium elements.

The production of americium metal and the investigation of certain of its properties are of special interest because, in terms of the hypothesis that the seventh period elements form a 5f series of the actinide type, americium occupies an analogous position to that of europium which is a metal of abnormally low density compared to its lanthanide neighbors. A striking resemblance would thus exist between the two analogs if, as is indeed the situation, americium also has a markedly lower density than do its preceding neighbors in the series. It will be of interest to learn whether the transamericium elements possess relatively high densities like the preamericium actinides, or densities more comparable to that of americium as a result of the expected tendency of transplutonium elements to bear a greater resemblance to typical lanthanides.

PURITY OF THE AMERICIUM STOCK

Highly purified aqueous nitrate stock solutions of americium (Am^{241}) were made available for this investigation by B. B. Cunningham. Aliquots of these solutions were spectrochemically analyzed for cations either by J. G. Conway or by the Argonne National Laboratory and generally no amounts of cations were found above the limits of detection. In other batches of stock, lanthanum concentrations of several tenths of a percent were detected.

PREPARATION OF AMERICIUM TRIFLUORIDE

Americium hydroxide was precipitated from the nitrate stock by gradually neutralizing the acid stock with anhydrous ammonia. The precipitate was centrifuged, slurried into a small platinum dish, transferred to a platinum hydrofluorination apparatus (Fig. 1), dried in a stream of oxygen and slowly heated to an ignition temperature of about 650°C thereby converting most of the hydroxide to crystalline dioxide.[6] After allowing the reactor to cool, anhydrous hydrogen fluoride was allowed to flow over the dioxide and the reactor

temperature was gradually elevated to 650°C. The small concentration of hydrogen present in commercial hydrogen fluoride served as the reducing agent. After an hour's hydrofluorination, the reactor was cooled to 100°C, evacuated, and refilled with hydrogen.

The apparatus consists essentially of a platinum reactor (D) the flanges of which are clamped vacuum-tight by the stainless steel blocks (C). The substance to be converted is placed in the platinum vessel (E). Flow metering devices for oxygen and hydrogen, hydrogen fluoride and vacuum connections, and an aneroid pressure gauge are connected to a manifold at (F). The platinum spheres (A) contain filter disks of sintered platinum to prevent the intrusion of solids into the reactor and to prevent the catastrophic loss of radioactive solid. A furnace (G) of nichrome wire wound on a quartz tube and insulated with magnesia was employed. The plastic bubbler (H), filled with a fluorocarbon oil, gave an indication of the exhaust gas rate. Ordinary brass needle valves (B) in which the packing had been replaced with teflon turnings were used.

The faintly pink product was established by x-ray diffraction to be americium trifluoride similar to that previously prepared by Fried[6] and identified by Zachariasen.[7]

---

(7) W. H. Zachariasen, Metallurgical Laboratory Report CP-3521 (May, 1946).

PREPARATION OF THE METAL

The apparatus employed for metal production is schematically diagrammed in Fig. 2. The water-jacketed glass bulb (D) with an optical port (A) is connected to a fast pumping, high vacuum system at (B). The microfurnace 0.6 mm tungsten wire coil is supported on 2 mm diameter tungsten electrodes. The present design of furnace and bulb has been modified from that used in the preparation of plutonium[8,9] and neptunium[10] to have superior prerun outgassing

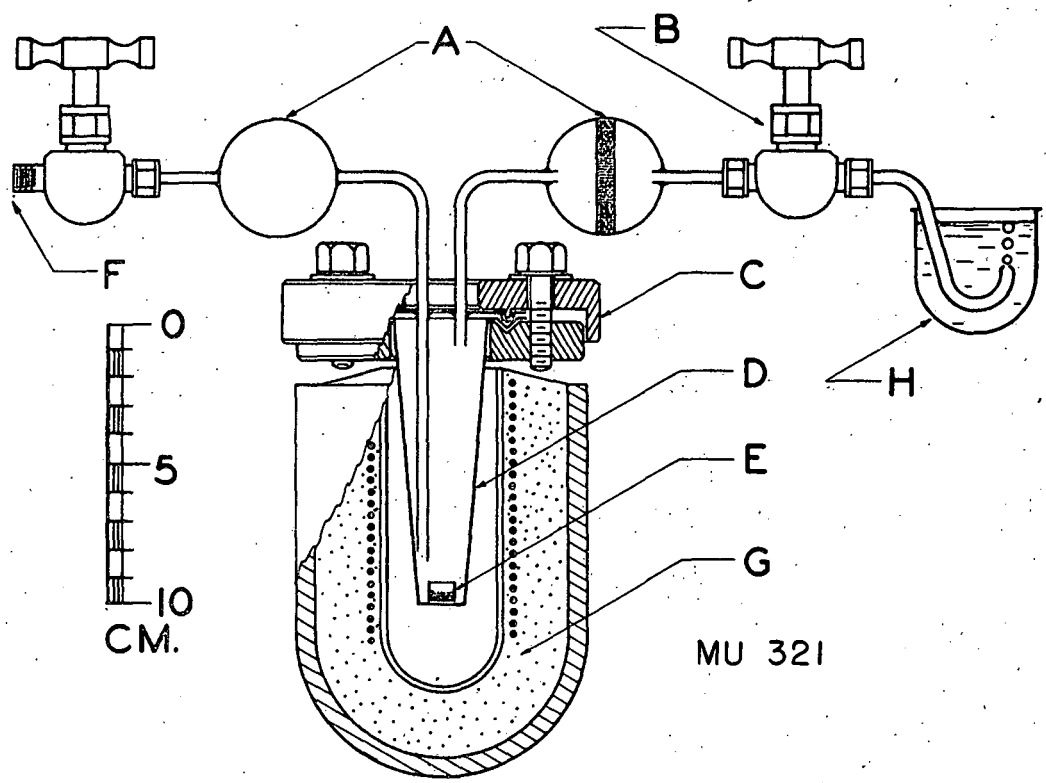

Fig. 1

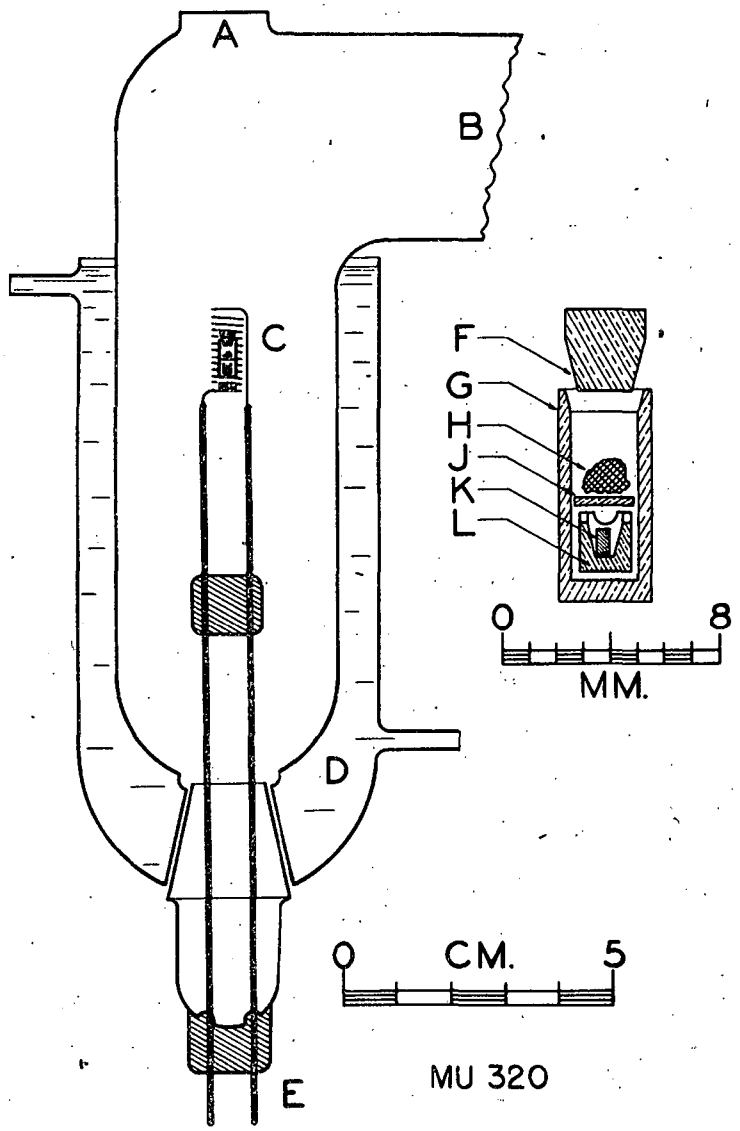

Fig. 2

(8) E. F. Westrum, Jr., Metallurgical Laboratory Report CK-1586 (May, 1944) p. 20.

(9) E. F. Westrum, Jr., Metallurgical Laboratory Report CN-2496 (January, 1945), p. 12.

(10) S. Fried and N. R. Davidson, J. Am. Chem. Soc. 70, 3543 (1948).

characteristic and less tendency toward outgassing during the actual firing. Direct current heating has been favored over the previous use of alternating current in that the substitution has permitted better temperature control during the critical period when reductant metal is issuing from the furnace. The lower peak voltage of the direct current permitted operation below the ionization potential of barium.

Because only a limited quantity of americium was available for this purpose, a number of experiments were made using silver metal as a stand-in to determine the loss by volatilization from the crucible system.

After a thorough degassing and vitrification of the beryllia crucible system at about 1700°C and a pressure of 10^{-6} mm, the inner crucible (L) was loaded with a cylindrical sample (K) of AmF_3 pelleted to 0.5 mm diameter in a polished, hardened steel die. After insertion of (L) in the outer BeO crucible (G), a several fold excess of high purity barium metal (H) was added above the BeO plate (J) and the system capped with the plug (F). Upon insertion of the furnace into the bulb and evacuation to 10^{-6} mm, the reduction was made at a maximum temperature of 1100°C for a maximum of one and one-half minutes. The first attempted reduction (in July, 1946) was successful and about forty micrograms of trifluoride gave a single coherent, almost spherical globule in an estimated yield better than 75%.[11] A number of subsequent reductions

(11) E. F. Westrum, Jr., reported in University of California Radiation Laboratory, Chemistry Division Memorandum MB-IP-96 (July, 1946).

were made in successive months on the scale of hundreds of micrograms by the same reduction technique at 1000-1200°C. In an attempt to improve the yield somewhat, other reduction experiments were tried in which a pressure of about 2.5 cm of argon was used. After the reaction had taken place at a furnace temperature in the vicinity of 1200°C, the furnace was cooled to 950°C and the barium allowed to distill to the bulb under vacuum. This type of run was less successful in producing a large, coherent yield of metal.

The BeO crucibles made from a nitric acid paste of 200 mesh high fired beryllia are convenient in that they absorb all the slag formed on this scale of reduction, leaving a clean globule of metal. No evidence of reaction with the beryllia was noted on the surface of the globule adjacent to the crucible at the temperature of the vacuum reductions. Other crucible materials were also tried. A crucible ground from densely sintered beryllia was very successful. A reduction in a tantalum crucible gave metal in high yield, but the americium wet and spread uniformly over the tantalum crucible. No metal was obtained in reductions in cerium sulfide (CeS) crucibles. Lithium was used as a reductant with less success in obtaining a coherent yield.

The luster of the freshly prepared metal is whiter (that is, more silvery) than that of the metallic state of the preceding three elements prepared in the same manner. The metal is very malleable and ductile compared to uranium and neptunium prepared by the same technique on this scale. A single flattening in a micro staking tool resulted in an increase in cross sectional area of approximately 20 fold without pronounced fracturing of the edge. Although normally handled in the anhydrous nitrogen atmosphere of the dry box, to avoid the corrosive action of laboratory air, the metal is stable in dry air at room temperature and tarnishes quite slowly.

In order to establish the preparation of the metal, a 50 microgram piece of metal was dissolved in dilute HCl and the hydrogen evolution measured.[12]

(12) The apparatus we devised for this purpose is shown in Fig. 12 in a review article by Dr. B. B. Cunningham, Nucleonics, 77, 62 (November, 1949).

The dissolution was very rapid and complete and yielded 1.5 moles of hydrogen per mole of americium within the experimental accuracy (± 10%). Spectrochemical analyses indicated lack of contamination of the metal by barium or beryllium.

PREPARATION OF AMERICIUM HYDRIDE

A 40 microgram globule of americium was subjected to the action of hydrogen gas at room temperature in an ingenious device (diagrammed in Reference 10) developed by H. L. Baumbach for the preparation of plutonium hydride on the microgram scale. No reaction occurred at room temperature and one atmosphere, but upon heating to 50°C a rather violent shattering of the metal globule yielded a black voluminous powder. The volume of hydrogen uptake corresponds to a formula of $AmH_{2.7 \pm 10\%}$.

THE DENSITY OF THE METAL

The density of a number of particles of metal produced have been determined by the displacement of a meniscus of dibutylphthalate in a capillary in which the sample was immersed. The capillaries were calibrated by optical measurement of their diameter and with pellets of platinum of known density. The values summarized in Table I are strikingly lower than the densities of thorium, uranium, and neptunium.

Table I. Density of Americium Metal

Am Globule	Wt. of Am (mg)	Density (g cm^{-3})
1	0.200	11.1
2	0.350	11.9
1+2	0.557	10.0
3	0.210	12.1
4	0.270	12.0

The first four determinations were made with the assistance of W. J. Blaedel, and number five with the help of J. C. Wallman. The two pieces used in determination three are those of the preceding determinations compressed in a hydraulic press. No visible exterior cracks or voids were observed under 60x magnification. The high gamma ray background prevented confirmation of the density values by x-ray diffraction analysis.

ATTEMPTS TO DETERMINE THE MELTING POINT

A number of attempts were made to determine the melting point of americium in the micromelting point apparatus already described.[13] Instead of the sharp

(13) E. F. Westrum, Jr., and L. Eyring, "The Melting Point and the Density of Neptunium Metal. A Micro Melting Point Apparatus for Metals," (accepted for publication in the J. Am. Chem. Soc. in June, 1951).

convergence of the jaws noted for zinc, magnesium, and neptunium, only a gradual convergence was observed beginning at about 850°C. Convergence did not become complete even at 1200°C and on attempting to remove the globule it was found to be so firmly attached to the tungsten that the pellet was torn asunder on forcibly separating the jaws. Examination of the americium adhering to the tungsten failed to reveal any oxide or high melting inclusions.

THE HEAT OF SOLUTION OF AMERICIUM METAL

Two heat of solution measurements of americium metal were made on globules of americium dissolved in 1.50 molar hydrochloric acid previously saturated with hydrogen. These determinations were made in a calorimeter specially designed and constructed for this purpose.[14] The data obtained are presented

(14) E. F. Westrum, Jr., and L. Eyring, to be described.

in Table II. The rather large uncertainties indicated for run (1) are occasioned

by weighing difficulties and also by the fracture of the fragile quartz calorimeter stirring shaft during the run. The heat of solution has been corrected for the water vaporized by the escape of the hydrogen.

Spectrochemical analysis of the calorimeter solutions indicated the presence of less than 0.1% of cerium and lanthanum in the metal. Neither barium nor beryllia were detected.

Table II

Heat of Solution of Americium Metal in 8.81 g 1.50 Molar HCl at 25°C

Run Number	1	2
Americium (micromoles)	1.48	2.28
Heat Evolved (cal)	0.248	0.357
Heat of Solution (kcal)	-167 ± 11	-159 ± 4

The weighted mean of these values (-160 ± 4 kcal) corresponds to the reaction

$$Am + 3H^{+}_{(aq)} = Am^{+3}_{(aq)} + 3/2\ H_{2(g)}$$

in 1.5 molar aqueous hydrochloric acid. The same value obtains for 1 molar aqueous hydrochloric acid. Corresponding values for the heats of formation of -123.6 kcal[15] for U^{+3}, -127.3 kcal[14] for Np^{+3}, and -141.9 kcal[15] for Pu^{+3},

(15) L. Brewer, U. S. Atomic Energy Commission Declassified Document AECD-1899 (February 10, 1948).

in 1 molar HCl at 25°C indicate a value in line with expectation. The heat of formation of crystalline $AmCl_3$ is estimated to be -248 kcal per mole from the rough correlation of heats of solution of trivalent chlorides of the same crystal[16] structure with the ionic radii and comparison with the heat of

(16) H. Bommer and E. Hohmann, Z. anorg. Chem., 248, 357 (1941).

solution of $PuCl_3$.[17]

(17) H. P. Robinson and E. F. Westrum, Jr., National Nuclear Energy Series, Plutonium Project Record, Vol. 14B, "The Transuranium Elements: Research Papers," Paper No. 6.54 (McGraw-Hill Book Co., Inc., New York, 1949).

ACKNOWLEDGMENT

This investigation was performed in 1946 under the encouragement and general direction of Professor Glenn T. Seaborg and supported by the Atomic Energy Commission contract W-31-109-Eng-38. We appreciate the generous cooperation of many individuals in the Chemistry Division, the interest of Professor B. B. Cunningham, and the technical assistance of Winifred Heppler.