FW

UCRL- 1056

DECLASSIFIED

UNIVERSITY OF CALIFORNIA — BERKELEY

TWO-WEEK LOAN COPY

This is a Library Circulating Copy which may be borrowed for two weeks. For a personal retention copy, call Tech. Info. Division, Ext. 5545

RADIATION LABORATORY

DISCLAIMER

This document was prepared as an account of work sponsored by the United States Government. While this document is believed to contain correct information, neither the United States Government nor any agency thereof, nor the Regents of the University of California, nor any of their employees, makes any warranty, express or implied, or assumes any legal responsibility for the accuracy, completeness, or usefulness of any information, apparatus, product, or process disclosed, or represents that its use would not infringe privately owned rights. Reference herein to any specific commercial product, process, or service by its trade name, trademark, manufacturer, or otherwise, does not necessarily constitute or imply its endorsement, recommendation, or favoring by the United States Government or any agency thereof, or the Regents of the University of California. The views and opinions of authors expressed herein do not necessarily state or reflect those of the United States Government or any agency thereof or the Regents of the University of California.

UNIVERSITY OF CALIFORNIA

Radiation Laboratory

Contract No. W-7405-eng-48

DECLASSIFIED

THE MELTING POINT AND THE DENSITY OF NEPTUNIUM METAL.

A MICRO MELTING POINT APPARATUS FOR METALS.

Edgar F. Westrum, Jr., and LeRoy Eyring

December 22, 1950

Berkeley, California

THE MELTING POINT AND THE DENSITY OF NEPTUNIUM METAL. A MICRO MELTING POINT APPARATUS FOR METALS.*

Edgar F. Westrum, Jr.,** and LeRoy Eyring***
Radiation Laboratory and Department of Chemistry
University of California, Berkeley

December 22, 1950

ABSTRACT

Neptunium metal was prepared on the milligram scale by reduction of NpF_3 with barium. The melting point was determined as $640 \pm 1^{\circ}C$; the density was found to be 19.5 ± 0.5 gm. cm.$^{-3}$. An apparatus designed for the measurement of the melting points of 10 to 1000 microgram samples of metals is described.

---

*This research was performed under the auspices of U.S. Atomic Energy Commission and was reported in MB-IP-162 (January, 1947). Presented at the 118th National Meeting of the American Chemical Society at Chicago, September 5, 1950.

**Present address: Department of Chemistry, University of Michigan, Ann Arbor, Michigan.

***Present address: Department of Chemistry and Chemical Engineering, State University of Iowa, Iowa City, Iowa.

In connection with the production of some high purity neptunium metal for calorimetry and other physico-chemical experiments it was desirable to determine the melting point and the density of the specimens used. Neptunium isotope of mass 237 was employed.

The neptunium metal was produced by the reduction of neptunium trifluroide. Inasmuch as several trifluoride preparations made from hydroxide precipitates proved to be only partially reducible to the metal, neptunium oxalate was selected as the starting material for metal production. The light green oxalate was precipitated upon addition of 1M ammonium oxalate to a 1M hydrochloric acid solution of the neptunium (IV) stock. After centrifugation and withdrawal of the supernatant liquid, the precipitate was washed with dilute oxalic acid and with water. The oxalate was slurried into a small platinium dish, placed in the platinum hydrofluorination apparatus,[1] dried by passing anhydrous oxygen over it, and converted to

[1] E. F. Westrum, Jr., and L. Eyring, "The Preparation and Some Properties of Americium Metal," (for publication in the Journal of the American Chemical Society).

dioxide by heating to 650°C. After cooling, an equimolar mixture of oxygen and hydrogen fluoride was used to prepare the tetrafluoride; this was reduced with a 3:1 hydrogen-hydrogen fluoride mixture at a maximum temperature of 650°C. The reduction to metal was achieved in a microfurnace and by a technique similar to that used by one of us[2] for plutonium metal production and

[2] E. F. Westrum, Jr., Manhattan Project Metallurgical Laboratory Report CK-1586 (May, 1944); E. F. Westrum, Jr., Manhattan Project Metallurgical Laboratory Report CN-2495 (January, 1945).

described by Fried and Davidson[3] for their use in the preparation of neptunium

[3]S. Fried and N. Davidson, J. Am. Chem. Soc. 70, 3539 (1948).

metal. Barium vapor at 1300°C. was used as a reductant for the neptunium trifluoride. Both the substances were contained in a sintered beryllium oxide crucible system made from a nitric acid paste of beryllium oxide powder. Several milligrams of purified neptunium stock were available for these experiments and the reductions were made on a scale varying from the order of one tenth to two milligrams. Spectrochemical analysis typically detected the presence of the following cations in the metal: Be, 0.013; Ca, 0.02; Fe, 0.08; and U, 0.2, mole percent. Elements not detected but for which the limits of detection were fairly high were: Ba, 0.08; K, 1.8; Li, 0.8; and Ta, 0.2, mole percent. The nearly spherical globules of metal produced were cleaned in a dry box under anhydrous xylene and sealed in evacuated glass tubes until used. The metal is silvery in color and has a malleability similar to that of uranium prepared on this scale.

DETERMINATION OF THE NEPTUNIUM MELTING POINT

In melting minute, irregularly shaped fragments of crystalline salts the deformation of the crystal under the surface tension of the liquid frequently serves as an indication of fusion. Alternatively, the disappearance upon fusion of the interference patterns of anisotropic substances observed with a polarizing microscope often provides a convenient indication of the change of phase of the material. Neither of these methods can be used on metallic globules. Furthermore, the formation of a very thin oxide film upon readily oxidized metals may so retain the metal that a bent disk may not collapse at the fusion temperature under the combined effect of gravity and the surface tension. The evidence of fusion may be postponed for tens

of degrees above the fusion temperature for some actinide elements even in high vacuum.

The construction and operation of our micro apparatus for the determination of the melting point of microgram quantities of even readily oxidized metals may be seen from Figure 1. The apparatus is contained in a pyrex glass bulb (A) connected to a high vacuum line through (N). The sample and furance mounted on 2 mm. diameter wolfram rods (C) spaced with nonex glass (B) are removable through the standard taper joint (P). The minute globule of metal (H) is held between the plane, parallel faces of the jaws of the 1 mm diameter wolfram wire spring (E) by a force of the order of a gram. The spring is mounted with a tantalum clamp (D) and surrounded by a cylindrical tantalum radiation shield (M) .05 mm. thick and 2.2 cm. in diameter. A double fibre-glass insulated iron-constantan thermocouple (O) is spot welded to this spring near the sample at (G) (see insert I) and serves to measure the sample temperature. Observation of the specimen is made along the axis (K) with a low power binocular microscope through the polished pyrex optical port (J). The temperature of the radiation shield and its contents are controlled by means of the copper tubing coil (L) connected to a 300 watt portable oscillator to be described in a subsequent paper. In operation, the furnace and bulb are thoroughly outgassed at a temperature several hundred degrees higher than anticipated for the melting point and the vacuum is subsequently broken with purified argon. Then a small globule of metal is placed between the jaws of the wolfram spring with a jeweler's forceps with ground tips. To aid in placing and to prevent the loss of the sample in transfer to the apparatus the globule was occasionally coated with a small quantity of a volatile grease. Upon reassembling the apparatus and achieving a high vacuum, the power

output of the oscillator is gradually increased to heat the shield at the desired rate, but not beyond the ability of the pumping system to maintain a pressure about 10^{-6} mm. of Hg despite the degassing of the hot metal parts. The thermocouple e.m.f. was bucked with a Rubicon Type B potentiometer and was recorded automatically on a Leeds and Northrup Speedomax recorder with a precision of about 0.5°C. The behavior of the sample was observed microscopically through an optical window sealed into the bulb. The observation of fusion (convergence of the jaws) was either relayed or recorded with a magnetically activated pen on the Speedomax recorder.

In addition to using calibrated thermocouple wire, the apparatus was checked against small pieces of National Bureau of Standards freezing point samples of magnesium and zinc with stated freezing points of 651 and 419.5°C. We observed melting point values of 650 and 419.5°C., respectively.

Two independently prepared samples of neptunium metal of about 200 micrograms each yielded melting point values of 639 to 641 and 639°C. The metal showed no tendency to adhere to the wolfram jaws but formed a thin circular foil between them with the bulk of the metal extruding out and forming a bright sphere adjacent to the jaw opening. This behavior made reloading of the same sample convenient and facilitated repeated determinations. A sharp convergence of the jaws was noted for all the samples of Np, Zn, and Mg.

In adapting the original apparatus for use in work involving thorium metal and protactinium compounds, Dr. Walter Blaedel and the author modified the apparatus by use of a platinum versus platinum-10% rhodium thermocouple and a 2.5 KW oscillator to attain temperatures in excess of 1300°C. For still higher temperatures a helical wolfram wire heater was substituted for the radiation shield and a Leeds and Northrup optical pyrometer used to determine

the sample temperature after appropriate correction for the adsorption by the glass port and the emissivity of the wolfram surface. Good agreement with the best reported values of the thorium melting point were obtained.

THE DENSITY OF NEPTUNIUM METAL

Fried and Davidson[3] reported densities of 17.9 and 17.6 gm./cc. on a forty microgram piece of metal in an apparatus described by Kirk. We have determined the density of a number of specimens of Np metal by a similar method (devised by S. Katz) in which a precision bore capillary tube with polished plane sides parallel to the axis and a scribed fiducial mark is employed. The displacement of a dibutylphthalate meniscus upon the immersion of the metal sample in the capillary and the centrifugation of the entire tube was used to determine the volume of the metal sample. Two capillaries of 0.5 and 0.75 mm. diameter were calibrated both by optical measurement of the diameter and by experiments using pellets of platinum of a density of 21.4 gm. cm.$^{-3}$. The two methods gave agreement within about 2%. The results of the density measurements are summarized in the table below.

Density of Neptunium Metal

Np Sample	Wt. of Np. (mg)	Density (gm./cc.)
1	0.425	17.4, 16.9
2	1.553	19.7, 20.1, 19.4
3	1.774	19.4, 19.3
4,5,6 (3 pieces)	0.685	19.2

Each determination represents metal from a different metal preparation and the figures reported are in general the mean value of repeated experiments. The low density of sample one (which is in good agreement with the values of Fried and Davidson) may be due to the occurrence of a higher

temperature metallic phase stabilized by the presence of an impurity. We believe that the higher densities (19.5 ± 0.5) found in the subsequent experiments may represent the normal density of the phase stable at room temperature.

Unsuccessful attempts were made to transit sample one to a higher density form. Sample four was annealed for two hours at 90°C., whereas samples five and six had no treatment beyond metal production. X-ray examination by Dr. David Templeton of all three samples (four, five, and six) yielded identical x-ray patterns having a face-centered cubic structure with a cell constant of 4.89 A and a calculated density of 14.7 gm. cm^{-3}. The pattern is attributed to a thin oxide film rather than the bulk metal itself. A microdilatometric experiment on larger quantitites of neptunium now available would be of interest in establishing the presence of the suspected transitions above room temperature. An additional indication of polymorphism is the fact that the originally bright, smooth, metallic surface of the globule extruded the melting experiment was observed to wrinkle on cooling to approximately 100°C. suggesting a transition involving a considerable volume change. The observed wrinkling is not, of course, a reversible effect.

ACKNOWLEDGMENT

We appreciate the encouragement and advice of Professor G. T. Seaborg and the use of neptunium stock purified by T. J. LaChapelle, L. B. Magnusson, and J. C. Hindman.

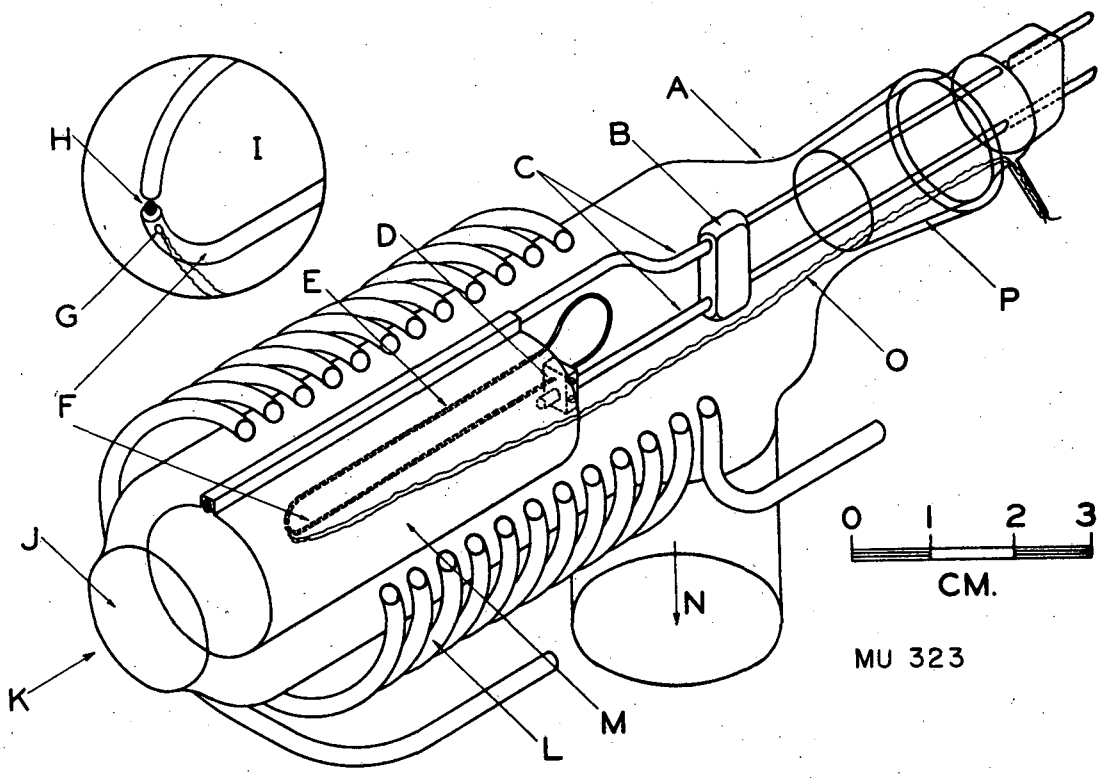

Figure 1. Micro Melting Point Apparatus