Copy 2
UCRL 7057

UNCLASSIFIED

UNIVERSITY OF CALIFORNIA — BERKELEY

TWO-WEEK LOAN COPY

This is a Library Circulating Copy which may be borrowed for two weeks. For a personal retention copy, call Tech. Info. Division, Ext. 5545

RADIATION LABORATORY

DISCLAIMER

This document was prepared as an account of work sponsored by the United States Government. While this document is believed to contain correct information, neither the United States Government nor any agency thereof, nor the Regents of the University of California, nor any of their employees, makes any warranty, express or implied, or assumes any legal responsibility for the accuracy, completeness, or usefulness of any information, apparatus, product, or process disclosed, or represents that its use would not infringe privately owned rights. Reference herein to any specific commercial product, process, or service by its trade name, trademark, manufacturer, or otherwise, does not necessarily constitute or imply its endorsement, recommendation, or favoring by the United States Government or any agency thereof, or the Regents of the University of California. The views and opinions of authors expressed herein do not necessarily state or reflect those of the United States Government or any agency thereof or the Regents of the University of California.

Copy 2

UCRL-1057
Unclassified-Physics
Distribution

UNIVERSITY OF CALIFORNIA

Radiation Laboratory

Contract No. W-7405-eng-48

UNCLASSIFIED

PHYSICS DIVISION QUARTERLY REPORT

August, September and October, 1950

December 19, 1950

Berkeley, California

TABLE OF CONTENTS

I GENERAL PHYSICS RESEARCH

Cloud Chamber Program 3
Film Program 4
The Neutral Meson Program on the 184-inch Cyclotron 6
Energy Spectra of Protons Scattered from Light Elements 8
π^+ Meson Counting Technique 9
Deuteron-Proton Scattering 10
Alpha Bombardment of Lead 11
Proton-Proton Scattering 12
Range Energy Relation for 340 Mev Protons 13
Photo Production of Neutral Mesons by Liquid Hydrogen 14
Mass Determination of the π^- and π^0 Mesons Using the γ-Ray Spectrum from π^- Absorption in Hydrogen 15
300 Mev Pair Spectrometer for Use at the Synchrotron 16
Attempts to Detect Coincidence Between Positive Mesons and Deuterons Corresponding to the Process $p + p \rightarrow \pi^+ + d$ 17
Heavy Ion Acceleration Program in the 60-inch Cyclotron 18
Scintillating Crystal Gamma Counter 19
Beam Snout of the 60-inch Cyclotron 21
Synchrotron Studies 22
Theoretical Physics 24

II ACCELERATOR OPERATION AND DEVELOPMENT

184-inch Cyclotron 25
60-inch Cyclotron 26
Synchrotron 27
Linear Accelerator 28
Bevatron Development 30

I GENERAL PHYSICS RESEARCH

1. Cloud Chamber Program

Wilson M. Powell

Rectangular Piston Cloud Chamber. A cloud chamber for certain counter controlled experiments to be performed in conjunction with the Berkeley synchrotron has been designed and tested in the Laboratory. It is shown in Fig. 1. This chamber is rectangular in shape in order to create the most favorable counter geometry. It has thin walls which may be of any substance capable of withstanding the proposed pressures. These walls are effectively, windows in a heavy brass frame or cage. In order to minimize mechanical distortions in the gas upon expansion, a piston-type chamber was chosen. The piston is a 1/4 in. lucite sheet supported by triangular braces along the major and minor axes of the rectangle with axial ball bearings holding a single central guide column. The piston is a free fit to the back of the chamber. A thin rubber (deutal dam) diaphragm rests against the piston but is not attached to it. In order that the gas pressure within the chamber hold the rubber against the piston, the piston is pre-loaded by four live rubber "springs". In the compressed state the position of the piston is controlled by the "back pressure" of the chamber. Upon expansion the piston falls against a stop plate of 1 inch Dural. This system works in a very satisfactory way without any noticeable puffs, or severe turbulance. A baffle system made of 3/4 inch wide brass strip of 1/32 inch thickness creates a honey-comb type structure of 1/4 inch x 1/4 inch openings. This baffle is mounted just below the illuminated region and carries a piece of black velvet on its upper surface. The expansion valve is a two stage arrangement in which a small valve controls the opening of a large valve. The frontal dimensions of the chamber are 8 inches by 14 inches, while the main expansion valve is 7 inches in diameter so that very rapid expansions are obtained. Owing to the metal cage construction, high electric field gradients are experienced with the usual clearing field arrangements. These gradients appear to give rise to various types of ionic "poisoning".

One satisfactory clearing field system was obtained by running a heavy copper wire axially the length of the chamber. With this system of electrodes, potentials of 500 volts have been tried with excellent results. A 0.3 mc radium source, open on one side, was put against the end wall of the chamber, and good sharp tracks obtained with very low background. No difference in "clean up" has been noted with or without the baffle system.

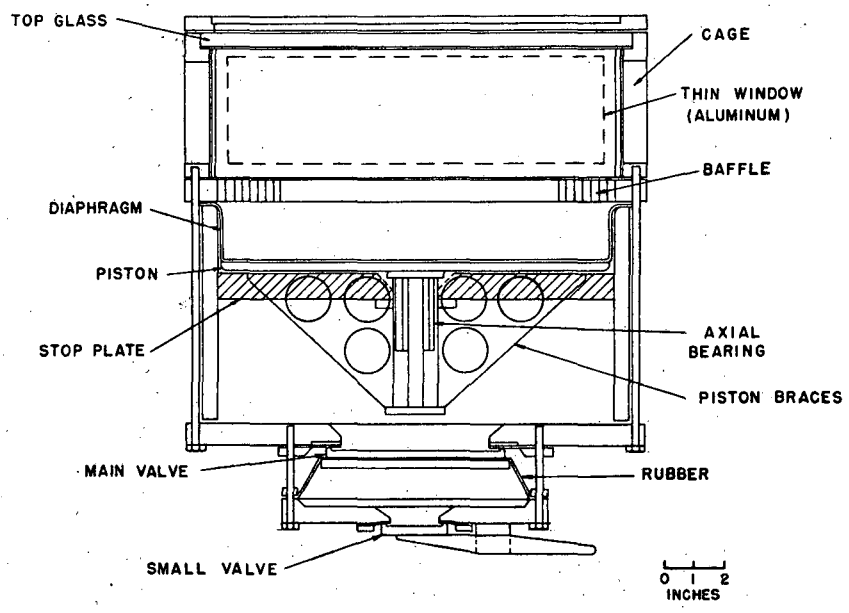
TOP GLASS
CAGE
THIN WINDOW
(ALUMINUM)
BAFFLE
DIAPHRAGM
PISTON
STOP PLATE
AXIAL
BEARING
PISTON BRACES
MAIN VALVE
RUBBER
SMALL VALVE
0 1 2
INCHES

FIG. 1

MU 1182

2. Film Program

Walter H. Barkas

High Energy Electron Processes. High energy electrons and positrons produced by the synchrotron beam were sorted in momentum by a magnetic pair spectrometer and allowed to enter electron-sensitive G-5 emulsion. These plates had been previously erased of electron tracks produced by radioactivity and cosmic rays. It was found feasible to follow the tracks of these high energy particles and to record the events in which charged particles are produced or in which the high energy track is deflected. Absolute cross sections can thus be determined.

In a study of 35 cm of 200 Mev electron track, the following events were observed:

1. Number of electron-electron scatters in which at least 30 Kev of energy is transferred - 210.

2. Number of positron-electron pairs produced by the primary particles - 3 (probable).

3. Number of nuclear scatters greater than 10 in horizontal plane - 23 (in 31.0 cm).

In a similarly conducted study of 30 cm of 200 Mev positron track, the following events were observed:

1. Number of positron-electron scatters in which an energy transfer of at least 30 Kev occurred - 218.

2. Number of positron-electron pairs produced by the primary particles - 5 (probable).

3. Number of nuclear scatters greater than 1° in horizontal plane - 19 (in 17.6 cm).

Further measurements are being made and the results will be compared with theory.

Grain Density. A study of the nuclear emulsion as a quantitative instrument is continuing. Previously it was reported that from grain counts on singly and doubly charged particle tracks that the grain density is a function of the rate of energy loss alone. We have now observed that when the grain density is low, it becomes proportional to the rate of energy loss. Furthermore in the saturated or clogged region of the track we have found that the gap density provides a reliable measure of the rate of energy loss, and indeed is inversely proportional to the rate of energy loss in heavily clogged tracks. We have been able to derive as good results on the ratios of particle masses by gap measurements as by grain counting.

Meson Focusing. Meson orbits in the field of the cyclotron have been studied by means of the stretched wire technique. It was found that the previously computed

orbits were correct and no loss of mesons has been sustained because of incorrectly placed channels. The meson intensity therefore still appears to be too low to carry out a good scattering experiment using plate detectors.

A spiral orbit focusing spectrometer has been constructed for meson experiments. Mesons of both signs originating on the axis of the magnetic field with a given momentum are focused into an orbit around the axis. Mesons of up to 12.5 Mev have been focused in this way, but a larger magnet will be required for high energy mesons. Using plate detectors, a study of the positive to negative production ratio from a variety of elements has been begun.

Fast Protons Produced in Capture of π^- Mesons. A study of fast protons from the capture of π^- mesons has been completed. Protons of energy $\geq$ 30 Mev accompany 9.5 $\pm$ 1.3 percent of all absorptions in emulsion. Protons of energy > 70 Mev occur rarely. The energy spectrum supports the view that the meson is captured by a proton of the nucleus with the recoil momentum taken up by a small, variable number of nucleons, rather than by a single nucleon. The angular distribution of the low energy star prongs associated with the fast protons is inconsistent with the proposal that such particles "evaporate" from the recoiling residual nucleus. Instead it appears that they are knock-on particles produced by the nucleons recoiling from the point of capture.

3. The Neutral Meson Program on the 184-in. Cyclotron

Walter Crandall, R. H. Hildebrand, Richard Hales, Richard Madey and B. J. Moyer

During the past quarterly period the effort on the neutral meson program has been directed toward improving the methods of counting photon pairs from the decay of the neutral mesons produced in the deflected proton beam. The problems to be overcome have to do with the following factors:

1. The particles to be detected, namely, the conversion electrons from the neutral meson photons, are minimum ionization particles. These have to be detected in the presence of recoil protons and nuclear fragments, produced by fast neutrons, whose specific ionization is many times minimum and whose intensity is many times that of the desired electrons.

2. The deflected beam of the cyclotron is delivered in bursts of about twenty microseconds duration occurring at a frequency of about sixty per second. Because of this duty cycle the instantaneous beam intensity during a beam pulse is approximately 1,000 times the time average of the beam intensity. This means that the resolution time with which coincidences are recorded for the coincident gamma photons must be made very sharp in order to sufficiently suppress accidental coincidences.

3. The counter arrangment usually employed in detecting photons makes use of three scintillation counters in the telescope. Between the first and second crystal is a lead converter, and a count is registered by a gamma-ray passing through the first crystal without producing ionization and converting in the lead sheet so as to produce conversion electrons yielding a coincidence in the last two crystals. Unfortunately, high energy neutrons are capable of producing the same effects by passing through the first crystal and then creating energetic recoil protons which pass through the second and third crystals.

One may circumvent this difficulty by making use of the fact that the conversion of a gamma photon delivers two electrons which are in general separated from one another by more or less scattering. By proper adjustment of the converter thickness it is possible to produce a separation between the two electrons which will permit them to have a high probability of simultaneously recording in two crystal detectors placed side by side. A neutron from the target would not be able to simulate this particular kind of event.

Satisfactory electronics for this experiment have been devised by the use of the following features:

1. A limiting device which limits the height of all pulses delivered from the photo-multiplier tube into the amplifier to a certain maximum value.

2. The use of broad band chain amplifiers following the limiter.

3. Clipping the output pulse from the amplifier by means of a shorted delay line, and

4. The use of a quadruple coincidence circuit of a modified Rossi type

employing a diode clamping device to make more positive the distinction between quadruple and triple coincidences.

By use of this type of apparatus, together with some experiments in methods of collimating the beam, progress has been made to such a point that data on angular distribution of the coincident photons should be forthcoming very soon.

4. Energy Spectra of Protons Scattered from Light Elements

J. Cladis, J. Hadley, W. Hess, and B. J. Moyer

The 35 channel magnetic particle spectrometer was used in the cave to obtain energy spectra of protons scattered at 22.2° from hydrogen, deuterium, carbon, and oxygen. The spectra indicate a preponderance of nucleon-nucleon collisions. All of the peaks fall at nearly the same energy, the energy expected for p-p collisions. The ratios of integrated yields for deuterium, carbon, and oxygen to hydrogen are roughly put at 1.5, 5.0, and 7.2 respectively. The half-widths of the curves are 70 Mev for hydrogen, 110 Mev for deuterium, and 130 Mev for carbon and oxygen. The half-width for the H curve is of course instrumental, and a contribution of this amount exists for the other curves.

The energy resolution of the analyzer is now being improved by the inclusion of the now completed coincidence circuits in the overlap channels. It will be recalled that the first 16 G.M. tubes in the high energy sector of the magnet are staggered so that neighboring tubes overlap one-third of a G.M. tube. Thus, by connecting the coincidence circuits to identify particles in the overlap channels, the energy resolution can be improved by a factor of three in these high energy channels. The net energy resolution can further be improved by narrowing the slit entrance to the magnet and by reducing the target thicknesses.

5. π^+ Meson Counting Technique

M. Jakobson, and A. Schulz

The technique of counting π^+ mesons by π decay has been used to obtain a value for the π^+ mean life. Measurements were made by changing the delay of a variable gate of width 8×10^{-8} sec. Delay cables used were RG63/U. A value of $\tau_m = 2.54 \pm 0.14 \times 10^{-8}$ sec. was obtained.

Measurements are being carried out with R. S. White on photo meson production from deuterium at the synchrotron. The apparatus has also been used to detect mesons at the cyclotron using magnetic separation. At full scattered beam the background is about 15 percent from a carbon target. Meson identification was checked by half-life and energy.

6. Deuteron-Proton Scattering

A. Bloom

Using the 190 Mev deuteron beam from the 184-inch cyclotron, further studies have been made on the elastic scattering using coincidences. These confirm the results previously reported. A study has been made of methods of counting single particles with telescopes to be used at small and large angles, and has shown that they are not sufficiently reliable to be used in this experiment. The inelastic scattering is now being investigated.

7. Alpha Bombardment of Lead

R. Leininger, and F. N. Spiess

The previously reported activity 0.6 seconds has been identified with AcC' (Po^{211}). This half-life has been carefully measured and is 0.51 sec. The half-life is about 100 times longer than what was predicted according to the Geiger Nultal law, and about 10 times longer than expected according to the modern alpha systematics. The identification was made using AcC' obtained from At^{211} and separating it from its At parent by evaporation. Work is proceeding on the identification of the 30 sec. and 3 min. period.

8. Proton-Proton Scattering

O. Chamberlain, E. Segrè, C. Wiegand

All present results are summarized in Fig. 1 and Table I.

A paper on the subject is being written.

TABLE I

Differential Scattering Cross Sections at Reduced Energies

Quoted errors are standard deviations from counting statistics only.

E Mev	ϕ (degrees)	$\sigma(\phi)$ (10^{-27} cm^2 sterad^{-1})
119	63	4.0 ± 0.4
119	78	4.2 ± 0.4
119	89	3.95 ± 0.12
164	61	4.1 ± 0.4
164	89	3.8 ± 0.3
249	48	3.5 ± 0.3
249	63	3.7 ± 0.2
249	78	3.69 ± 0.15
249	87	3.64 ± 0.11

126 ucrl 1057

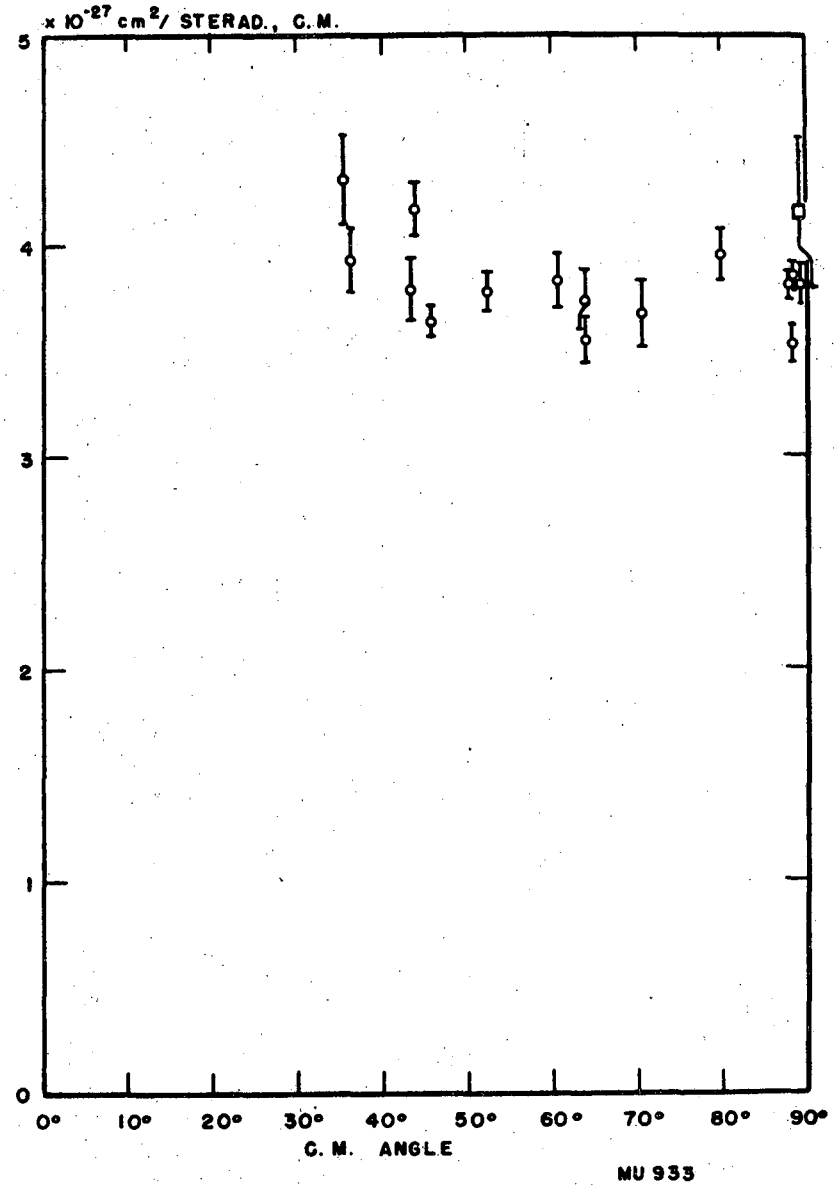

Fig. 1

9. Range Energy Relation for 340 Mev Protons

R. Mather and E. Segrè

The energy of protons in the cyclotron beam has been measured using the angle of emission of Cerenkov radiation from a slab of flint glass. The range of the protons in Al, Cu and Pb has also been measured. In this way we have obtained 3 absolute calibrations of the range energy relation.

A report for the Physical Review is being prepared.

10. Photo Production of Neutral Mesons by Liquid Hydrogen

J. Foster, J. Steller, and W. K. H. Panofsky

Liquid hydrogen was bombarded successfully in the synchrotron beam in order to study the photo production of neutral mesons. The photo production was observed by gamma-gamma coincidence between two liquid scintillation telescopes presented at various angles to the beam. The results are as follows: 1) the total cross section for photo production is approximately 1.1×10^{-28} cm^2/quantum, 2) the differential cross section per unit solid angle for photo production is approximately 7×10^{-30} cm^2 at 90° and 17×10^{-30} at 45°, 3) the angular distribution is strongly peaked forward, 4) the correlation function relative to angle between the two telescopes indicates that the excitation function for the production of neutral mesons by photons has a higher order of contact near threshold. This is in marked contrast to the production of charged mesons by photons.

11. Mass Determination of the π^- and π^0 Mesons Using the Gamma-Ray Spectrum from π^- Absorption in Hydrogen

L. Aamodt, R. Phillips, J. Hadley, and W. K. H. Panofsky

The masses of the π^- and π^0 mesons have been determined to a good precision using the method of gamma-ray measurement as outlined in the last Quarterly Report. The results are $m_{\pi^-} = 275.2 \pm 2.5$ em, $m_{\pi^0} = 264.6 \pm 3.2$ em. The observed spectra are fitted by curves calculated from the theoretical resolving power curves of the pair spectrometer.

12. 300 Mev Pair Spectrometer for Use at the Synchrotron

R. Kenney, N. Knable, and W. Blocker

Instrumentation has been completed for measuring pair production cross sections, total attenuation cross sections and similar numbers for the 320 Mev x-ray beam of the synchrotron. A primary run has indicated satisfactory conditions with background and counting rate.

13. Attempts to Detect Coincidence Between Positive Mesons and Deuterons Corresponding to the Process $p + p \rightarrow \pi^+ + d$

R. Crawford, K. Crowe, and W. K. H. Panofsky

A coincidence arrangement has been designed using liquid scintillators to detect the deuterons in the above process. The existence of the deuterons in p-p collisions has been strongly inferred from the experiments of Richman, Cartwright, Skinner, Peterson and Whitehead, but it appears to be a matter of importance to establish their existence directly. The experiment is a fairly difficult one, owing to the fact that the deuteron is emitted nearly in the forward direction and is thus difficult to separate from the primary beam. Results to date have been inconclusive.

14. Heavy Ion Acceleration Program in the 60-inch Cyclotron

James F. Miller

Exploratory bombardments with carbon ions in the 60-in. cyclotron have continued. The alpha activity of At^{205} and At^{203} from bombardment of Au with C^{12} ions has been used as a quick measure of the effect of varying cyclotron parameters on the beam hitting an internal probe target. The optimum magnet resonance for the internal beam was found to be about three amperes below the external peak resonance. A maximum yield of about 80,000 alpha counts/second from C^{12} on Au was obtained, 5 minutes after the end of a 5 minute bombardment.

A beam measuring probe has been designed and built by A. Ghiorso and Carroll Gordon of the Radiation Laboratory Chemistry Group. It has a box head made of Ta foil as an r.f. shield. The Ta foil was found necessary to withstand the heat of bombardment; a Cu foil melted. The interior of the box pumps down quickly to cyclotron pressure. Inside the box is a collector foil of Cu thick enough to stop carbon ions and collect their charge while passing alphas, protons and deuterons. This apparatus is not water cooled. It has worked very well, the beam current being amplified either through a vibrating electrometer or the normal target beam measuring system of the cyclotron. A maximum probe current of 3×10^{-8} amperes has been found and quite definitely identified (from magnet resonance and Au foil bombardments) to be C^{12} ions. Using a time average beam value of 10^{-8} amperes and the maximum At yield found, the cross section for At^{205} is roughly 0.05 barns, and a similar value holds for At^{203} production. This is based on an assumed branching ratio of 10 to 1 between K capture decay and alpha emission. The ratio between At^{203} and At^{205} from a 5 minute bombardment was measured at 1.95.

It has recently been found that when raising the tank pressure by shutting the gates to some of the diffusion pumps, the beam picked up by the beam-measuring probe is more than doubled. This is an indication, like the broad magnet resonance, that much of the ionization is done outside the ion source.

A program of study of nuclear emulsions exposed to the C^{12} and C^{13} beams is under way but is not yet complete. Observation of some 60 stars indicates that evaporation of alphas immediately after entrance of the carbon ion is a much more favored process than proton evaporation. No hammer tracks have been observed such as might arise from Li^8 knocked out of the nucleus. Stars of 2, 3, 4, 5 prongs have been seen.

A number of bombardments have been made to look for alpha emitters far down in the periodic table. A decay energy adequate to give observable alpha half-lives might possibly be secured from the more highly neutron deficient isotopes produced by carbon bombardment and by looking for such isotopes as could decay by alpha emission to one of the nuclear closed shells. Such alpha activity would be in competition with K capture or positron emission. This work is not yet conclusive enough for results to be quoted.

A study of fission from bombardment of various elements by carbon ions is also in progress.

15. Scintillating Crystal Gamma Counter

Kenneth D. Jenkins

A gamma-ray counter has been designed to meet the following specifications:

1. A direct replacement on a scaler for a G-M tube and its quenching amplifier.

2. A counting efficiency at least ten times that of a G-M tube and a signal to noise ratio better than that of a G-M tube.

3. Small enough to be moved about in one hand while operating.

4. Insensitive to alpha and beta radiation.

5. A simple method of maintaining the counting efficiency constant indefinitely.

The design of the present counter grew into its present form from a simple photomultiplier replacing a G-M tube. An amplifier was added to the output of the (5819) end-on photomultiplier to improve the signal to noise ratio. Maximum usable gain gave the best results. Maximum usable gain is that which will not produce counts due to noise on the input of the amplifier. Only simple compact designs were used so that the amplifier could be mounted on the tube base of the photomultiplier. Thus, the crystal, photomultiplier, and amplifier were mounted in a brass tube 2-1/2 inches in diameter and 10 inches long. The unit gave satisfactory results when used on different scalers which had input sensitivities of 0.1 to 1.0 volts and required rise times of one microsecond or better.

When used on a Tracerlab Autoscaler (which has an input sensitivity of 0.3 volts), a set of curves as shown in Fig. 1 were made to show the counting rates for different gamma-ray energies with different voltages applied to the photomultiplier. Each of the gamma samples gave 10 counts per second on a G-M tube 6.4 cm in diameter which had a thin mica (approximately 3 mg/cm^2) window. The room background for the G-M tube was one count per second. In order to maintain the gain constant, it is necessary to have a standard source with a very long half-life that does not have a plateau anywhere in the usable range of the counter.

The crystal is of thalium activated sodium iodide mounted in an air tight aluminum cup with a lucite cap. To have fair stopping power for gamma rays below 1 Mev, the crystal should be between 1/4 in. and 1/2 in. thick. The aluminum cup is thick enough to stop all alpha radiation and all beta radiation up to 0.6 Mev. Microscope oil is used between the lucite cup and the photomultiplier to improve the light yield.

The amplifier shown in Fig. 2 is not in the strictest sense a linear amplifier but it will take an input signal of any amplitude without blocking. It is designed to take only negative pulses with the rise time controlled

principally by the length of the cable, being about 1/10 μs per foot of cable length. A series dropping resistor of sufficient size is placed in the high voltage lead to prevent more than rated voltage being applied to the photomultiplier with maximum voltage out of the high voltage supply.

The standard source found most reliable was 5 grams of unrefined uranium metal encased in a one gram per square centimeter aluminum case.

20a

URL-1057

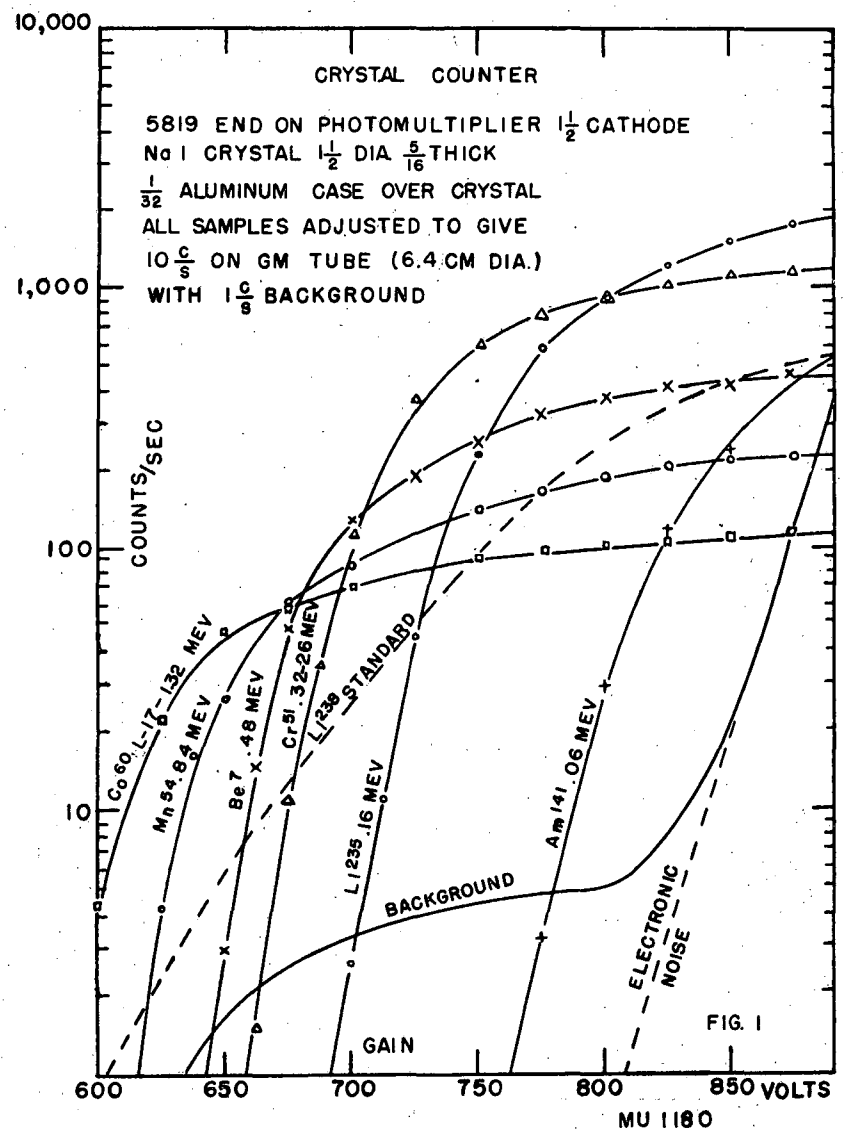

FIG. 1

20b UCRL-1057

PHOTO MULTIPLIER AND PRE-AMPLIFIER

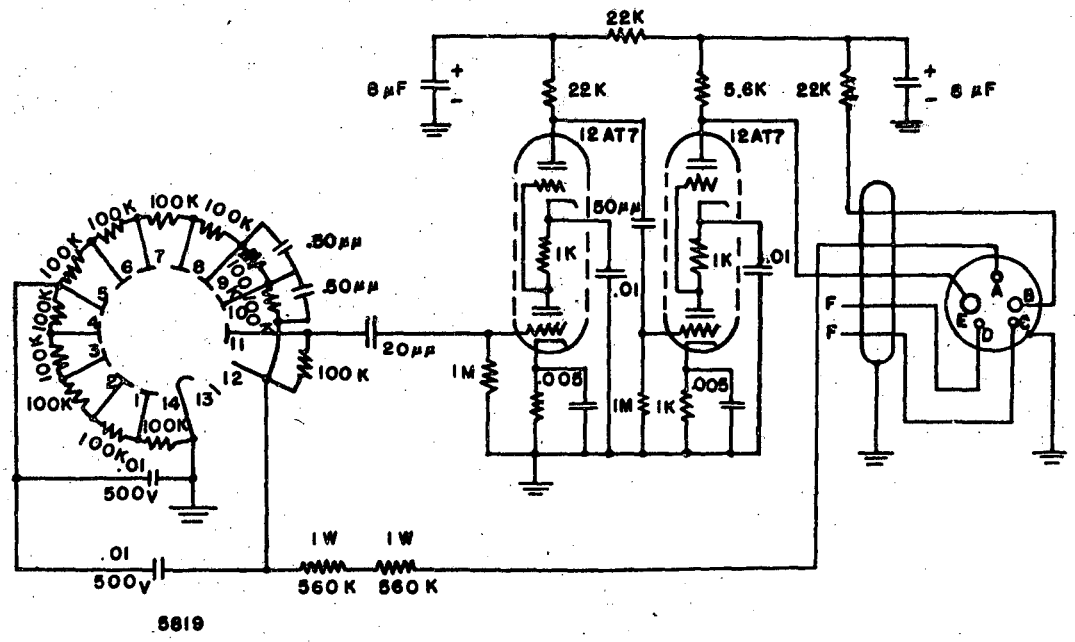

PRE-AMPLIFIER GAIN ≈ 200
RISE TIME ½ μS } 5 FT CABLE
DECAY TIME 2½ μS }
PEAK OUTPUT NOISE .1 VOLT

FIG. 2

MU1181

16. Beam Snout of the 60-inch Cyclotron

Thomas M. Putnam, Jr.

In order that certain physical experiments could be performed using the beam in a region free from the cyclotron magnet field, the beam was brought out through an iron snout so that it would clear the magnet yoke. The design for this snout was suggested by Dr. W. M. Powell. Fundamentally, the problem involved straightening the beam out from the standard target position where the field is of the order of 9000 oersteds and falls off (along the snout) to zero at about 6 ft. from the target. At this point, it reverses and increases to a maximum value of 30-40 oersteds. The snout was designed essentially to shield the beam from the magnetic field. The cross section at the input end was 1/2 in. x 1-1/4 in. inside with 5/16 in. of iron top and bottom and 1-1/2 in. on the sides. In the 9000 oersted field region, this reduced the field to 800-900 oersteds as measured with a portable G. E. fluxmeter. The snout tapered to 1-1/2 in. x 3 in. at the exit end and was 5 ft. in length. At this point a blank plate was put on and a measured beam of 0.25 μa (0.5 μa protons) was obtained through a 1/2 in. x 3/4 in. slot with 10 μa input. The beam position was such that an extension tube could be put on to bring it outside the water barrier which surrounds the cyclotron.

Fig. 1 shows the cyclotron and snout geometry with a scattering chamber in position for obtaining scattering data using the cyclotron beams. With 20 μa of molecular hydrogen (for protons) input, the measured beam through the chamber was of the order of 0.01 μa (10^{-8} amperes). The beam is collimated to 3/16 in. diameter as it enters the chamber.

21a

ucrl-1057

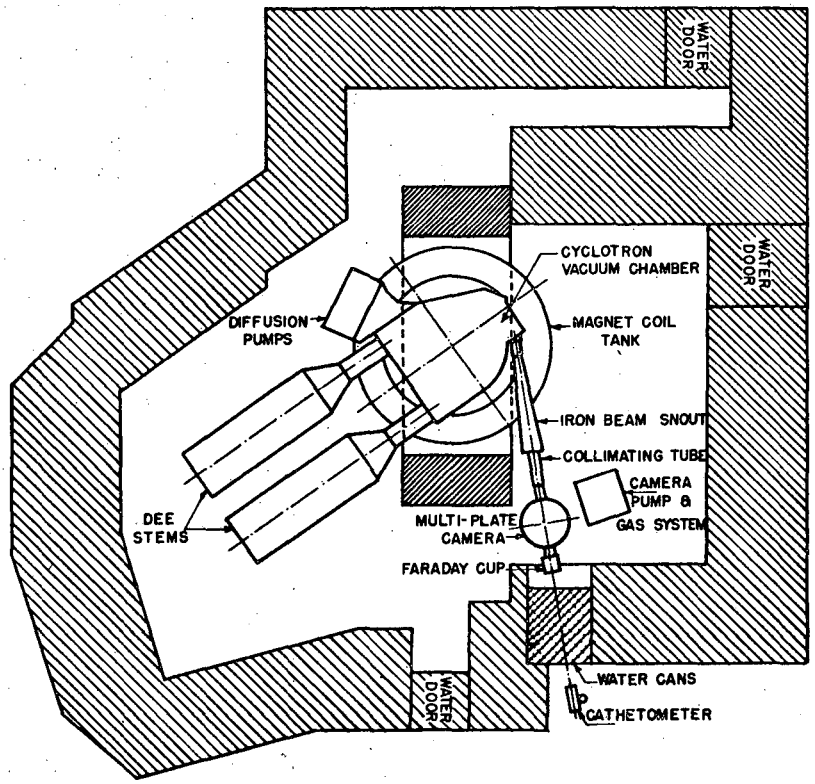

CYCLOTRON & CAMERA SCHEMATIC

MU 1015

Fig. 1

17. Synchrotron Studies

A. C. Helmholz

Synchrotron operation has been fairly continuous during the past three months. Shutdowns for installation of new equipment such as the pair-spectrometer magnet and new electronic equipment have consumed some time, but it is hoped that most of this work will be completed in the next quarter.

W. K. H. Panofsky and J. S. Steller have made a week's run on the production of neutral mesons by the synchrotron γ-ray beam in hydrogen. Another run is planned in the near future.

The work on the angular distribution of 20 Mev γ-rays in showers has been continued by J. W. Rose. Measurements have been taken for Pb and Cu using Cu foils as detectors. The angular distribution is in fairly good agreement with a theory worked out by L. Eyges and S. Fernbach and soon to be published. The most satisfactory measurements have utilized the γ-ray beam after it has emerged from 1-2 shower units of Pb or Cu. Cylinders are placed so as to measure all the γ-rays emerging in angular intervals. In this way measurements out to 60° have been made.

W. N. Jarmie, L. W. Jones, and K. M. Terwilliger have virtually completed a survey of the neutron yield from different elements bombarded with γ-rays. They utilized a BF_3 counter surrounded with paraffin and have measured 50 odd elements, some as compounds. The yields show a variation at low Z which was not indicated in any detail in the results of Kerst. The yield at high Z follows an approximately Z^2 dependence. The exact value of the exponent is being determined. Theoretical estimates seem to suggest a value more like 1.5. A transition curve similar to those taken by Strauch has also been measured in Pb. It is proposed to continue this work to measure the angular distribution of the neutrons. One minor difficulty has been in the scattering and absorption of neutrons before they emerge from the target. Measurements with the target, which is a rectangular piece, at different angles to the beam are being made. The counter is at 90° to the γ-ray beam. M. Jakobson and A. Schulz have measured the mean life of the π^+ meson by means of the counting technique involving the decays $\pi^+ \rightarrow \mu^+ + (?) \rightarrow e^+ + (?)$. The mean life of the π^+ turns out to be $2.54 \pm 0.14 \times 10^{-8}$ sec.

H. Medicus and J. Peterson have made an exposure of photographic emulsions to the photo-mesons from C and Be, using the "sea of copper". The plates are being scanned at the present time and should give evidence on the angular and energy distributions of π^+ and π^- mesons produced from Be.

Work on the stars produced in emulsions by γ-ray beams of maximum energy 320, 250, and 200 Mev by R. Miller has been virtually completed. A separate report is being written by Miller. In this connection a calibration by W. Blocker and R. Kenney of the "Nunan meter" has now provided information with which the yield in "total beam energy", McMillans (total beam energy divided by peak quantum energy), or r at one meter behind 1/8 in. Pb can be calculated. The last is a generally used method and is made with a Victoreen

thimble chamber enclosed in a 1/8 in. thick Pb cylinder. 400 r/min, measured in this way, is available as a steady beam, and 1000 r/min. has been obtained for periods of several hours.

Work on the yield of Li^8 from Be, B, C, etc., bombarded with γ-rays is being done by F. Coensgen. Yields are measured by means of the high energy Li^8 β-rays and an array of Geiger counters. The yield from oxygen and higher Z elements is very low, but relative yields are being obtained.

18. Theoretical Physics

K. Watson

A study has been completed of the lateral spread and angular distribution of cosmic ray showers.

An analysis has been made of the high energy proton-proton and neutron-proton scattering experiments to show that these are compatible with charge symmetry of nuclear forces on the assumption of short-range repulsion.

A phenomenological analysis of meson production in nucleon-nucleon collisions has been developed to describe the known experimental features of these processes.

A relativistic treatment of the deuteron problem is in progress. The analysis indicates that the meson theoretic potentials may be too singular to give solutions.

Studies in progress include an analysis of photo-nuclear processes at high energies, a study of the transmission of fast neutrons through nuclei, calculations concerning deuteron stripping, a deduction of the n-n force from the experimental energy distribution of γ-rays arising from the capture of π^- mesons in deuterium.

II ACCELERATOR OPERATION AND DEVELOPMENT

1. 184-inch Cyclotron

Operation. The 184-inch cyclotron operation was very steady during this period. The cyclotron was used for research experiments approximately 89 percent of the time that the crew was on duty. This figure is lower than those of previous periods because of the shutdowns that were necessary for the installation of the additional concrete shielding.

Main Concrete Shielding. The additional concrete shielding is about 70 percent completed. The extra five feet of concrete to the south wall was added on the inside of the main shielding because of space limitations in the building. This necessitated changes to the platform inside the shielding so that the new wall could be placed there. In addition to this, the southeast wall was rebuilt with new blocks that have tunnels in them for the large proton probe carts. These tunnels were put in the blocks for the purpose of getting the large probe carts out of the shielding to a place where they could be handled by the crane. The engineering and design of this track system was postponed some time ago because of the shortage of manpower. However, the job could be started again, sometime in the future, when more people will be available to work on it.

During these shutdown periods, new concrete plugs for the neutron beam were installed. The new plugs have a larger hole through them and thus enable a larger area of neutron beam to be used outside the shielding. This was made necessary by the low counting rates of certain experiments. The new hole is about four times the area of the older hole and hence should produce data about four times as fast for these experiments. In addition to the larger aperture, the collimator was made adjustable so that it could point to a small range of radii.

Magnetic Deflector. The magnetic deflector is moved inside the vacuum tank by means of four double feed screws. The double screws are necessary to get the required motion of the deflector in the limited space available. These screws have caused some inconvenience in the past by binding at the end of their travel. "Anti-jam" washers were designed some time ago and they were installed during this period. They consist of two metal rings bonded together by a rubber ring. This provides a little flexibility when the washer is compressed and thus prevents jamming.

2. 60-inch Cyclotron

G. Bernard Rossi

Operation. Operating statistics for the period are as follows:

Alpha bombardments	465.0 hours
Deuteron bombardments	348.8 hours
Proton bombardments	408.3 hours
Carbon bombardments	134.8 hours
Total Bombardments Time	1356.9 hours
Experimental operations	136.1 hours
Total Operation Time	1493.0 hours
Non-operative outage	324.0 hours
Total Available Time	1817.0 hours
Shutdown	367.0 hours
Holiday and Daylight Saving Time change	25.0 hours
Total Time	2209.0 hours

Percent operation efficiency of available time = 82.2 percent.

A large amount of the non-operative outage was due to the fracture of the deflector hi-voltage insulator. This insulator is fabricated of zirconium oxide and is subject to 25-50 kv d.c. plus a lesser amount of r.f. induced by the dees. Thermal heating of the insulator was noticed before fracture, which at times was accompanied by d.c. drain increases of about a factor of two. A review of the electrical stress conditions on the insulator showed that the maximum forces of this type occurred half way along the length of the insulator. This was due to the length of the ground shield for protection of the insulator. Also, at this point (half-length) electron dumping occurred. This was verified upon examination of the components after the fracture. All components were completely aligned and the ground shield was cut back to one-third its previous length. This placed the electron dumping closer to the insulator base and better distributed the electrical stresses along the insulator length. The reworked system has been in operation for three weeks with no further evidence of thermal heating or electrical drain.

An increase in the bombardment time using C_{12}^{+6} particles is evident from the bombardment figures this quarter. Increased external beams and the availability of larger internal beams made bombardment practicable. Internal currents of the order of 10^{-8} amperes have been recorded using a vibrating reed electrometer.

3. Synchrotron

George C. McFarland

Operation of the synchrotron for this period has been very satisfactory. The available beam intensities have been greater than the demand for the great majority of experiments, in particular, scintillation coincidence counting experiments.

Several days following a meticulous peaking of the machine controls, which include magnet octant compensation adjustments, "N" shaping coil adjustments, amplitude and timing of the injection and other pulses, beam intensities better than 1000 R/min were available. These intensities were measured on a Victoreen thimble surrounded by 1/8 inch of lead at a distance of 1 meter from the target.

A typical beam intensity for scintillation counting experiments is 100-400 R/min delivered at 6 pulses per second with a nearly uniform beam spill out lasting 3 milliseconds per pulse. For activation experiments, it is desirable to use maximum intensity available with a beam spill out lasting 10-15 microseconds per pulse.

A Kerst type contractor fired slightly prior to injection has raised the beam intensity level by better than a factor of two. Very little development time has gone into this and other devices due to the demands on the machine time for physics research. A simple fast pulse with amplitude and timing controls was applied to a few of the 360° "N" correcting loops. The results were immediate. Future development and possible improvement is planned for this contractor and for a radial oscillation damping contractor proposed by J. M. Lawson of the General Electric Company.

The scope of physics research with the synchrotron has been broadened by the addition of a 22 ton pair-spectrometer magnet. This magnet rolls on portable rails and can be aligned in the beam in a matter of minutes. In addition, the electronic counting area has been tripled and will allow dual experiments to be run as well as provide the counting equipment for checking circuits and apparatus prior to scheduled runs, saving valuable beam time on the machine.

Development of the synchrotron is continuing and several projects are under way. Included in this group is a servo-regulator for maintaining a nearly constant beam intensity, and a voltage controller for the magnet energizing capacitor bank. Since the addition of the Kerst type contractor and its very fine timing relative to the injector pulse time, control of the capacitor H.V. has to be maintained within 1/2 percent at 19,000 volts. Testing of these devices will be made as time is available without interfering with the research program.

4. Linear Accelerator and Van de Graaff Machines

W. K. H. Panofsky

Operations. The linear accelerator and Van de Graaff have been inoperative during this period. As reported previously the Van de Graaff was disabled by a failure of two of the textolite supports which locate the aluminum casting on the high voltage end. Since it was anticipated that repairing this failure would take a fair amount of time, it was decided to shut down the linear accelerator also and to proceed with the installation of new oscillators to replace those in use. At the same time it was decided to increase the distance between the Van de Graaff and the linear accelerator input in order to provide a sufficient bunching distance in case bunching were considered desirable at a later date. This move requires large structural alterations in the Van de Graaff support structure, since it requires that now the entire low voltage end of the Van de Graaff including the entire column and support structure be moved for regular service operations. This in turn requires strengthening the carriage and auxiliary moving apparatus since now the weight to be supported is that essentially of the entire Van de Graaff machine.

The status of these changes is as follows: The new oscillators involving the Eimac XM15 tube have been tested and are ready for installation. Each oscillator has provided an output of 400 kw into resonant load in a satisfactory manner. Since the total power required of the linear accelerator is 2.2 megawatts and since 8 oscillators are being installed with an additional spare position, the overall performance of the linear accelerator should become more conservative as a result of this change. The transmission lines corresponding to the new oscillators have been installed and the tank has been evacuated. Extensive electrical changes have been made in the control system and high voltage supply system of the linear accelerator. In particular, the higher operating voltage of the new oscillators has required the installation of two pulse transformers between the output of the pulse forming lines and the oscillator input. The timing circuits have been revised in order to achieve more flexible choice of repetition rate and pulse length. Owing to the reduction of the number of oscillators from 25 to 8, one side of the linear accelerator tank is now entirely free with a consequent improvement in operating convenience.

The Van de Graaff generator failure has been repaired. The high voltage shell has been entirely rewired, since the old wiring components showed sign of corrosion due to decomposition products from Freon. The new wiring and electrical components have all been treated to make them essentially corrosion proof. In addition the serviceability of the electrical components has been greatly improved. The Van de Graaff has been operated satisfactorily at 4 Mev after these changes had been completed. After these tests the Van de Graaff was moved out of the building in order to make room for the new rail installations permitting the Van de Graaf to be moved as a whole. These rail installations are now 75 percent complete.

Remaining jobs to be done are: 1) R.f. testing of oscillators operating the 40 foot tank. 2) Completion of control wiring on linear accelerator.

3) Completion of construction of Van de Graaff foundation.

It is expected that the linear accelerator as a whole will be in operation by Christmas time.

5. Bevatron Development

W. M. Brobeck

During this period the Bevatron building was completed. All of the magnet core slabs were moved into the building and in preparation for erection the assembly shop in West Oakland was closed down and all the equipment moved to the Hill. By the end of October the magnet foundation had been laid out and parts to locate the magnet sectors were welded in place. Erection of the steel is just beginning.

The bed plates of both the magnet generator sets were completed and the machinery of one motor generator installed during the period. Most of the rectifiers and transformers have been installed and wiring is starting. The switchgear is installed and part of it energized. The blowers for magnet cooling were installed during this period.

Design of the injector linear accelerator has been practically completed and the principal parts are either on order or about to be ordered. However, orders for the magnet poles and parts of the vacuum system have been held up because of interference from other work. Progress on parts required for the magnet coils has been disappointingly slow and winding can probably not be expected to start before the first of the year.

The engineering and drafting remaining to complete the machine is proceeding very slowly due to withdrawal of personnel. This in combination with slow deliveries and the effect of the fire last spring has probably set the overall schedule back about six months.