cy. 2

UCRL-1061

cy. 2

UNCLASSIFIED

UNIVERSITY OF CALIFORNIA — BERKELEY

TWO-WEEK LOAN COPY

This is a Library Circulating Copy
which may be borrowed for two weeks.
For a personal retention copy, call
Tech. Info. Division, Ext. 5545

RADIATION LABORATORY

DISCLAIMER

This document was prepared as an account of work sponsored by the United States Government. While this document is believed to contain correct information, neither the United States Government nor any agency thereof, nor the Regents of the University of California, nor any of their employees, makes any warranty, express or implied, or assumes any legal responsibility for the accuracy, completeness, or usefulness of any information, apparatus, product, or process disclosed, or represents that its use would not infringe privately owned rights. Reference herein to any specific commercial product, process, or service by its trade name, trademark, manufacturer, or otherwise, does not necessarily constitute or imply its endorsement, recommendation, or favoring by the United States Government or any agency thereof, or the Regents of the University of California. The views and opinions of authors expressed herein do not necessarily state or reflect those of the United States Government or any agency thereof or the Regents of the University of California.

UNIVERSITY OF CALIFORNIA
Radiation Laboratory

ROUTING SHEET
Do not remove this page

INDEX NO. UCRL-1061
This document contains ____ pages
This is copy 2 of ____ Series ____

ISSUE TO: Information Division

UNCLASSIFIED
CLASSIFICATION

Each person who receives this document must sign the cover sheet in the space below. Please return the document to the Information Division. Do not send it to the next person on the list.

ROUTE TO	NOTED BY	DATE

RL-254

UCRL-1061
Unclassified - Physics Distribution

UNIVERSITY OF CALIFORNIA

Radiation Laboratory

Contract No. W-7405-eng-48

DETECTION OF POSITIVE π MESONS BY π^+ DECAY

M. Jakobson, A. Schulz, J. Steinberger

December 21, 1950

Berkeley, California

DETECTION OF POSITIVE π MESONS BY π^+ DECAY

M. Jakobson,* A. Schulz, J. Steinberger†

Radiation Laboratory, Department of Physics
University of California, Berkeley, California

December 21, 1950

Abstract. A method of meson detection similar to that of Rasetti, Alvarez, and Steinberger-Bishop has been developed using the π^+ decay for identification.

The pulses caused by a π^+ meson passing through one transtilbene crystal and stopping in a second opens a gate of width 0.08 μsec. which is delayed 0.025 μsec. If the μ^+ pulse arising from the decay of the stopped π^+ appears during the time the gate is open, the meson is counted. The amplifiers and coincidence circuits are of a distributed type. The gate generator is a non-symmetrical cathode coupled multivibrator using miniature tubes. A measurement of the mean life of the π^+ meson has been made by varying the gate delay and a value of $2.54 \pm 0.11 \times 10^{-8}$ sec. has been obtained.

---

* Whiting Fellow, University of California

† Now at Columbia University, New York, N. Y.

DETECTION OF POSITIVE π MESONS BY π^+ DECAY

M. Jakobson, A. Schulz, J. Steinberger

December 21, 1950

Introduction. Photons from the 322 Mev synchrotron at Berkeley striking a 2 in. polyethylene cube provided a source of π^+ mesons. The previous electronic methods of meson detection[1,2,3] make use of the $\mu^+ \rightarrow \beta^+$ decay for identification. Recent developments in electronics[4,5] and scintillation counters have reduced resolving times of amplifiers and coincidence circuits from $\sim 10^{-7}$ sec. to $\sim 10^{-8}$ sec., a time which is smaller than the half-life of the π^+ meson, making feasible π^+ decay detection electronically. In order to construct a π^+ decay delayed coincidence apparatus a circuit that would discriminate and make a gate of a few π^+ half-lives duration with a rise time less than a half-life was needed to complete the decay scheme. By taking a conventional cathode coupled multivibrator, making it non-symmetrical and reducing the time constants responsible for slow rise time and long pulse duration, a circuit meeting the requirements was obtained.

As a check that the particles identified by this method are mesons: (1) The energy of the photon beam was reduced below threshold for π^+ production and no counts other than accidental background appeared. (2) The plateau for pulse 2B (Fig. 1) is long and flat, indicating the same ionization loss, as would occur for a 4 Mev μ^+ meson arising from decay of a stopped π^+ meson. (3) Combining π^+ decay counting with the μ^+ meson decay scheme gives the expected number of $\pi^+ \rightarrow \mu^+ \rightarrow \beta^+$ coincidences.

Method of π^+ Decay Identification. Photomultiplier pulses arising from a π^+ meson passing through one transtilbene crystal and stopping in a second are

amplified by distributed amplifiers[4] of gain ~10 and fed into the distributed coincidence circuit A.[5] All cables used are of type RG 63/U with $Z_c \sim 125\Omega$. The output of the distributed coincidence circuit is delayed, amplified, and fed into a gate generator consisting of a non-symmetrical cathode coupled multivibrator, as shown in Figures 1, 2. The multivibrator tubes are matched tubes with the 6AN5 selected for high G_m. The reason for this selection is that the conducting 6AN5 must be in a region of high G_m to cut off rapidly when a negative pulse is put on the grid. A 6AK5 is used as the non-conducting tube so that it will hold the 6AN5 off for only a short time.

The gate rises in 0.005 μsec. and lasts for 0.08 μsec. By varying the grid return of the 6AK5, the gate width can be changed. Below widths of 0.06 μsec. the gate generator becomes a pulse broadener and loses its discrimination properties.

Signals 2B (Fig. 1) from the last dynode of the photomultiplier on the stopping crystal, are mixed with the delayed gate in the distributed coincidence circuit B. These delayed coincidences, with a short delay, are composed of stopped π^+ mesons whose decay μ^+'s appear during the time the gate is open; and of accidental delayed coincidences. In order to obtain the accidental delayed coincidences, the gate is delayed to a region long compared to a π^+ mean life. This method is valid as long as the duration of the beam is much longer than the gate plus delay times. The beam used was the synchrotron spread out beam which has a pulse duration of ~2000 μsec. A small proportion of the delayed coincidences are neither due to the μ^+ mesons from decay, or accidental, but are due to the μ^+ or μ^- mesons decaying to $\beta^\pm$ and leaving more than 3 Mev in the crystal. Hence a small constant background of 4 percent is always present.

As a check on meson identification, the output of the π^+ decay can be used to open another set of gates to make delayed coincidences with the positrons arising from the decay of the μ^+ mesons. This scheme further reduces the background and also the efficiency. Its usefulness depends upon the probability of an accidental coincidence each time a gate of 2 μsec. duration is opened to catch the positron from the μ^+ meson decay.

The plateaus obtained for 1A and 2A pulses (Fig. 1) are of the same form as reference 3. For 2B pulses a plateau was obtained which is shown in Fig. 3. This is due to the fact that the μ^+ mesons arising from the decay of the π^+ mesons at rest are monoenergetic and have four Mev to lose in the crystal.

<u>Comparison of Detection Methods</u>. The principal advantage of π^+ decay detection is the reduction in accidental background. For no limitation imposed by electronics the reduction would be essentially given by the ratio of the π^+ mean life $\tau_{m\pi^+}$ to the μ^+ mean life $\tau_{m\mu^+}$.

$$\frac{\text{Accidental background } \pi^+ \text{ decay}}{\text{Accidental background } \mu^+ \text{ decay}} \sim \frac{\tau_{m\pi^+}}{\tau_{m\mu^+}} \sim 0.01$$

For the circuit described here, this reduction is not realized, due to the fact that no discriminators with pulse output of width 10^{-8} are available. Hence, pulses 1A and 2A are only discriminated in time, not individually in pulse height. The output of the coincidence A is discriminated by the gate generator. In use, the background due to π^+ decay is 1/10 of that due to μ^+ decay. Since the pulse width out of this distributed amplifier is of the order of a π^+ half-life, the efficiency in time is about 0.35 (fraction of π^+ mesons decaying when the gate is open). For the μ^+ decay electronics of reference 4, the efficiency in time is 0.7. However, the positrons have an

energy spectrum, and due to the large number of lightly ionizing and low energy particles around the synchrotron, the positrons corresponding to the largest energy loss only must be selected by discriminator setting. Since the μ^+ mesons are monoenergetic and have a short range, essentially all can be collected, making the over-all efficiency of π^+ decay comparable to that of the slower counting scheme. Plateau operation is possible with π^+ decay, which aids in stability and in determination of the actual number of stopping mesons.

By actually counting π^+ mesons instead of μ^+ mesons, one does not need to worry about μ^- meson corrections or possible μ meson pair production. Also the scheme may be useful in detecting other decay products of the π^+ meson, if any exists.

Measurement of π^+ Mean Life. In order to measure the π^+ mean life, the delay of the gate is made variable by the introduction of calibrated cables between coincidence circuit A and the gate generator. Lengths of RG 63/U cable were calibrated by feeding a short pulse, approximately 10^{-8} seconds in width, into a parallel circuit consisting of the delay cable and the vertical plates of a synchroscope. The end of the delay cable at the synchroscope is terminated above the characteristic impedance; and the far end is left open, giving rise to positive reflections at either end and permitting the use of second reflections. Signals reflected from the far end of the delay cable return and appear on the scope trace at a time later than the initial signal. The trace containing the initial signal and the reflections was photographed. At intervals, 15 and 45 megacycle signals from a Hewlett-Packard signal generator were also photographed. The 15 megacycle signal was calibrated directly against station W.W.V. and the 45 megacycle signal, used to calibrate the sweep time base over smaller intervals, was calibrated by the 15 megacycle signal.

Comparators were used to measure the separation of the reflections. Fig. 4 is a plot of the time of signal transit against cable length for each of the cables. The points fall on a straight line which does not intercept the origin. A velocity of $(0.812 \pm 0.012)c$ was obtained. The length of the cable divided by the velocity does not give the delay because of end effects in the connectors. As seen from the graph (Fig. 4), the end effect is of the order of 10^{-9} seconds.

The mean life data was taken by varying the gate delay cyclically from short to long delay. Many cycles were traversed in obtaining the data. This was done to eliminate the effect of fluctuations in the beam, uncertainty in beam integration, and possible drift in the detection gear. Since the length of the gate is long compared to a mean life, data plotted directly from readings form essentially an integral curve. The finite length of the gate does not need to be taken into account, since this does not effect the slope of the curve.

A total of 5641 mesons was obtained with a background of 398 at each of the seven delays. Since this background occurs at each of the delays, it must be multiplied by the number of delays to give the total background. This relatively high background is due to operation at maximum beam levels. More beam time was allotted to the background delay because it is used at each point. The slope of the mean life curve (Fig. 5) was obtained by least squares fitting.[9] Weights were assigned to the points on the basis of the statistical error in counting and the estimated error in the delay measurements of the cables.

For measuring the mean life, the decay of π^+ mesons in flight need not be considered, since we need only measure the lifetimes of those which stop in the crystal. Calculations show that the effect on the measured π^+ mean life of the decay of the μ^+ mesons into positrons may be neglected. This is due to the fact that only a small fraction of the positrons occur at each delay; in addition, only about 30 percent or less of the positrons lose sufficient energy in the crystal to make a delayed coincidence.

The mean life obtained was $\tau_m = 2.54 \pm 0.11 \times 10^{-8}$ sec. (standard deviation indicated), or a half-life of $\tau_{1/2} = 1.76 \pm 0.08 \times 10^{-8}$ sec. Peierls[10] gives for the statistical error in a mean life counting experiment $\overline{\delta\tau^2} = \frac{\sigma \tau^2}{M}$ where σ is a function of the number of mean lives over which the counting takes place (tabulated in Peierl's article), and M is the number of counts. This yields a 3 percent statistical error, which, when combined with the error in cable delay measurement, gives the standard deviation indicated above. This value is in agreement with that of reference 8 but outside the standard deviation of the values of reference 6 and 7.

Thanks are due Professor E. McMillan and Professor O. Chamberlain for suggestions and encouragement, to Dr. Leininger for kindly providing the crystals, and the synchrotron crew for aid in carrying out the bombardments.

This work was performed under the auspices of the Atomic Energy Commission.

Information Division
scb/1-10-51

References

1. F. Rasetti, Phys. Rev. 60, 198 (1941).

2. Alvarez, Longacre, Ogren, and Thomas, Phys. Rev. 77, 752 (1950).

3. J. Steinberger and A. S. Bishop, Phys. Rev. 78, 494 (1950).

4. Hewlett, Jasberg, Ginzton, and Noe, Proceedings I.R.E., August, 1948.

5. C. Wiegand, UCRL-776.

6. Kraushaar, Thomas, and Henri, Phys. Rev. 78, 486 (1950).

7. E. A. Martinelli, W. K. H. Panofsky, Phys. Rev. 77, 465 (1950).

8. O. Chamberlain, R. Mozley, J. Steinberger, and C. Wiegand, Phys. Rev. 77, 394 (1950).

9. Worthing and Geffner, Treatment of Experimental Data, p. 238.

10. R. Peierls, Proc. Roy. Soc. 149, 467 (1935).

Figure Captions

Fig. 1 Block diagram of electronics

Fig. 2 Circuit diagram of more unconventional electronics

Fig. 3 Pulse 2B plateau (pulse corresponding to μ^+ meson). Plot of delayed coincidence counting rate against the relative height of a pulse required to make delayed coincidences. Obtained by counting the number of delayed coincidences for different gain settings of amp 2B.

Fig. 4 Plot of RG 63/U cable delay (in 10^{-8} sec.) against length of cable in meters. The result is a straight line that does not intercept the origin. This indicates finite delay for no cable length which is the result of the delay due to cable end connectors. Velocity obtained is $(0.812 \pm 0.12)c$.

Fig. 5 The number of π^+ mesons at each gate delay plotted against the gate delay. The number of π^+ mesons is obtained by counting at each delay for the same total beam and then subtracting from the shorter delays the number of delayed coincidences occurring at a long delay. The gate delay time is the time between the start of a pulse opening a gate and the start of the gate.

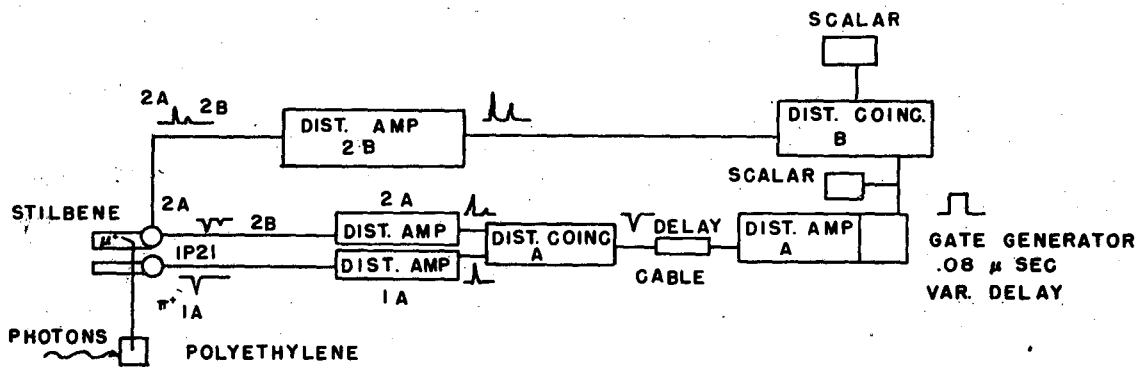

FIG. 1

BLOCK DIAGRAM OF ELECTRONICS

MU1235

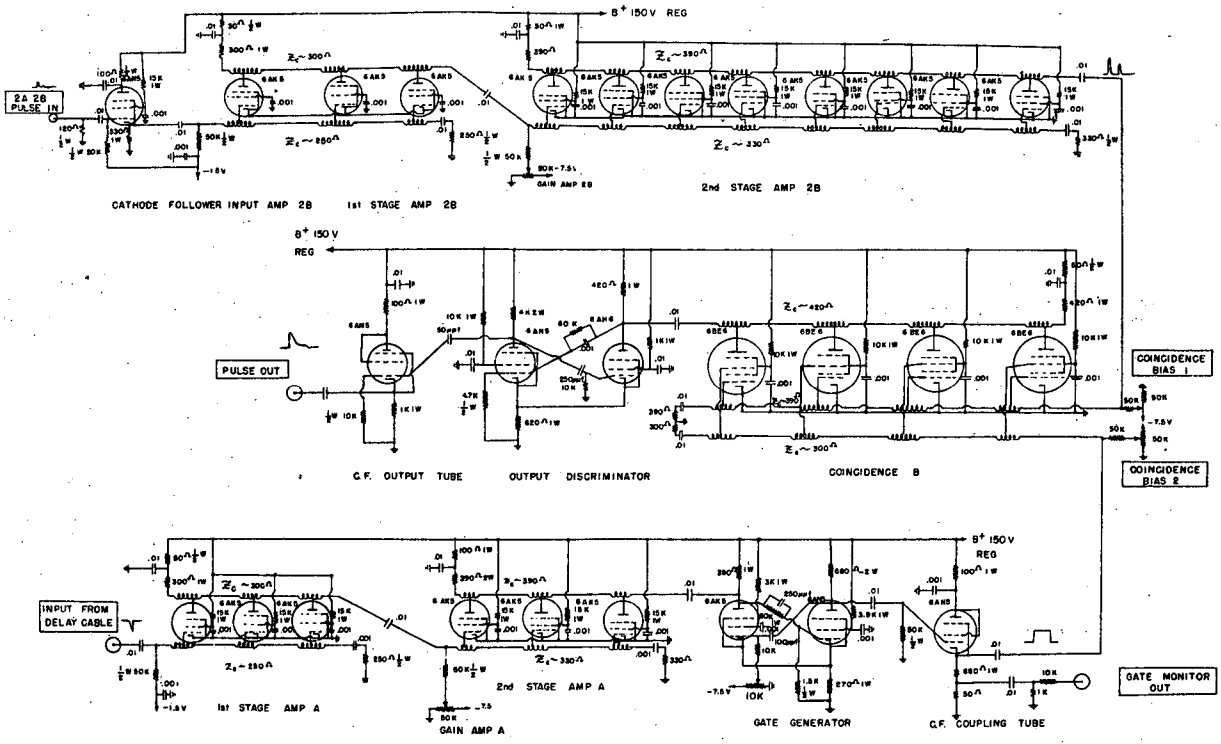

FIG. 2

DISTRIBUTED AMPLIFIERS A, 2B, GATE GENERATOR, DISTRIBUTED COINCIDENCE B AND OUTPUT DISCRIMINATOR

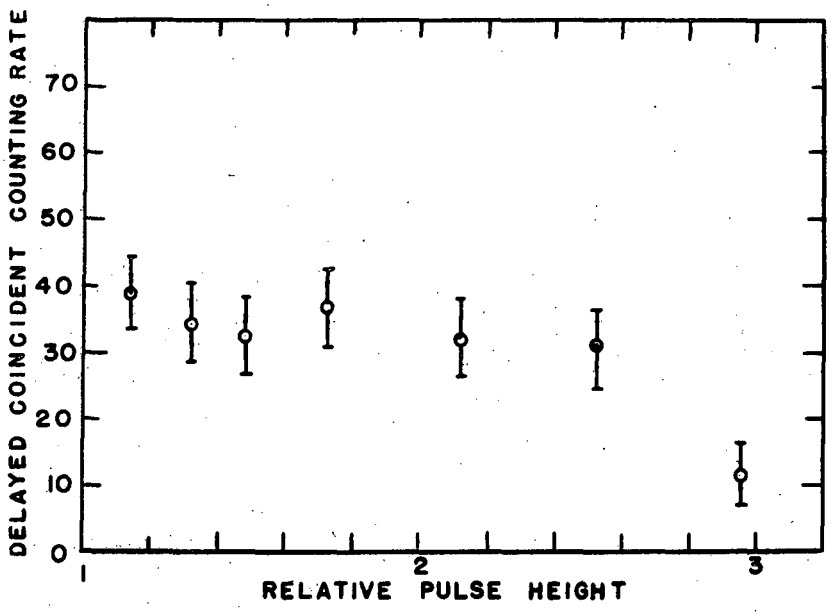

FIG. 3

PULSE 2B PLATEAU

MU1237

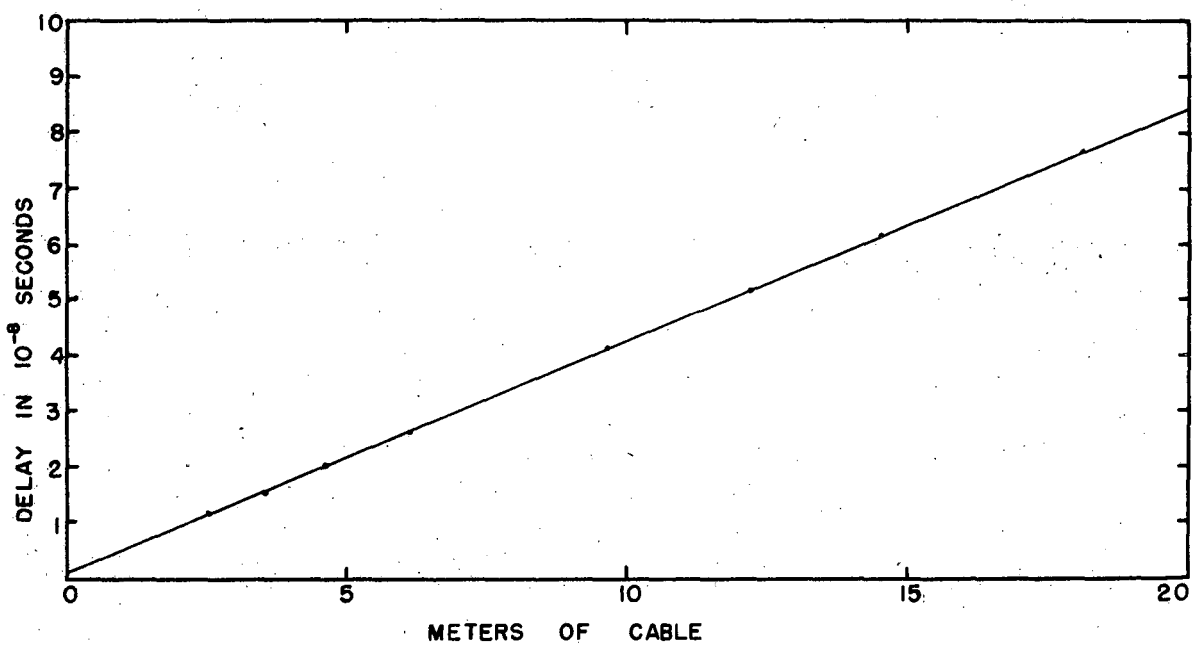

FIG. 4

DELAY IN RG 63/u CABLE

MU 1238

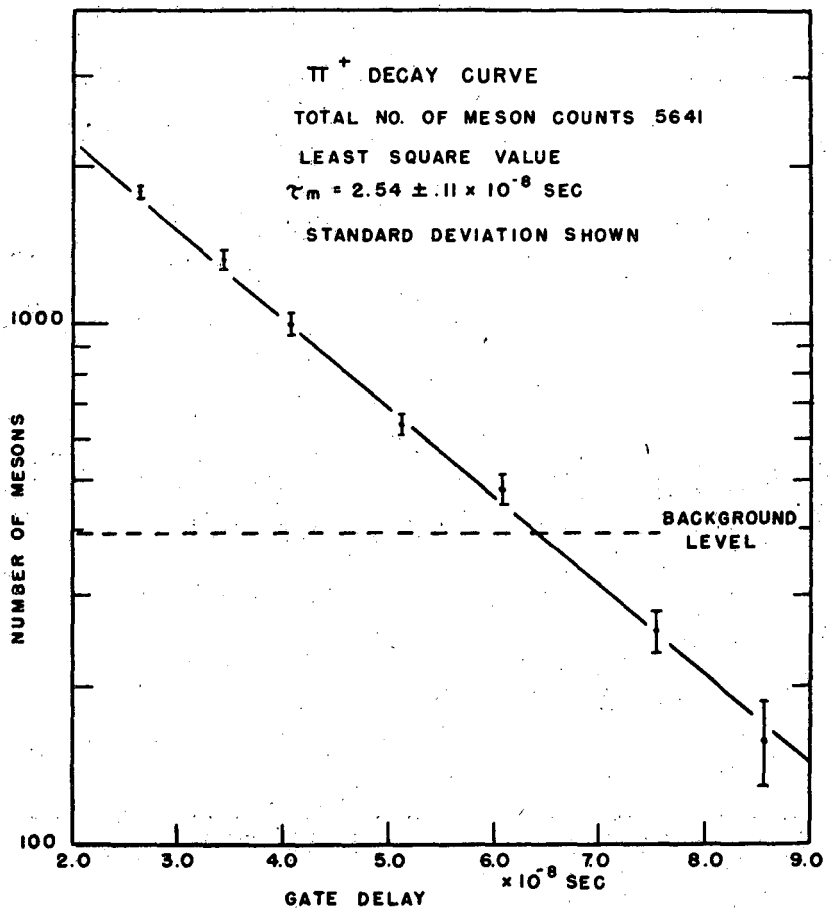
π+ DECAY CURVE
TOTAL NO. OF MESON COUNTS 5641
LEAST SQUARE VALUE
τm = 2.54 ± .11 × 10^-8 SEC
STANDARD DEVIATION SHOWN
1000
100
NUMBER OF MESONS
BACKGROUND LEVEL
2.0
3.0
4.0
5.0
6.0
7.0
8.0
9.0
× 10^-8 SEC
GATE DELAY

FIG. 5

MU1239