University of California

Ernest O. Lawrence Radiation Laboratory

A LIQUID-HYDROGEN ČERENKOV COUNTER

Berkeley, California

UCRL-10745

University of California

Ernest O. Lawrence Radiation Laboratory

A LIQUID-HYDROGEN ČERENKOV COUNTER

Berkeley, California

Submitted to Nuclear Instruments and Methods.

UCRL-10745

UNIVERSITY OF CALIFORNIA

Lawrence Radiation Laboratory
Berkeley, California

Contract No. W-7405-eng-48

A LIQUID-HYDROGEN ČERENKOV COUNTER

T. F. Zipf, Owen Chamberlain, John A. Kadyk,
and Carl M. York

May 9, 1963

Liquid-Hydrogen Čerenkov Counter

C. L. Kipf, [illegible] Chamberlain, and John A. Kadyk

Lawrence Radiation Laboratory,
University of California, Berkeley, California

and

Carl M. York

Physics Department,
University of California at Los Angeles, Los Angeles, California

May 9, 1963

ABSTRACT

Two models of a liquid-hydrogen Čerenkov counter have been constructed and tested. The first served as a prototype and was used to demonstrate the feasibility of the design concept and to show that liquid hydrogen does not give scintillation light of intensity comparable to that of Čerenkov light. The second, final version, was designed for use in an experiment in which particles brought to rest in the hydrogen could give rise to relativistic electrons. In this second counter, the efficiency for detecting relativistic particles by their Čerenkov radiation in liquid hydrogen was measured by stopping μ^+ mesons in the hydrogen and detecting their decay electrons outside of the flask after a suitable time delay. An average detection efficiency of 75% was obtained, taken over the volume of the hydrogen.

A Liquid-Hydrogen Čerenkov Counter*

T. F. Zipf, Owen Chamberlain, and John A. Nadyk

Lawrence Radiation Laboratory,
University of California, Berkeley, California

and

Carl M. York†

Physics Department,
University of California at Los Angeles, Los Angeles, California

May 9, 1963

I. INTRODUCTION

Counters that identify particles by requiring that Čerenkov radiation be emitted are a standard feature of many experiments.[1] The use of liquid hydrogen as a Čerenkov radiator has posed a number of practical problems which have not been solved until now. The present work was inspired by the necessity of making a velocity separation of particles originating in a liquid-hydrogen target. The principal technical problem was to couple in an optically efficient manner the liquid-hydrogen Čerenkov radiator to a photomultiplier tube at room temperature without creating excessive heat transfer to the hydrogen. The two counters that were constructed are described and the results obtained from them presented.

II. COUNTER DESIGN AND CONSTRUCTION

Both the prototype counter and the final counter were constructed on the same design principles as those employed in standard vacuum-insulated hydrogen targets.[2] Figures 1 through 4 show the flask and target assemblies.

The flasks were made of transparent 0.0075-in. Mylar D, which required special handling to prevent scratching of the surface. The inner surface of the cylindrical section was coated with aluminum by standard vacuum-evaporation

techniques. A transparent window to allow the Cerenkov light to leave the flask was obtained by masking off the desired area before depositing the aluminum. The end domes were aluminized separately and attached after completion of the cylindrical section. To eliminate the effect of bubbles from boiling at the longitudinal seam of the cylindrical section, this seam was placed at the top of the flask. Figures 1 and 3 show the flasks that were used in the two counters.

The vacuum jacket for the prototype counter, shown in fig. 2, was a modification of a jacket from a target used in a previous experiment. The stainless steel jacket had 1/8-in.-thick walls and was 16 in. in diameter by 9-1/2 in. long. A 5-1/2-in.-o.d. by 2-1/2-in.-i.d. by 1-1/2-in. annular piece was welded into an opening cut in the wall of the jacket. This piece had a 3-5/8-in.-diam recess milled to a depth of 3/4-in. and a groove to accept a 3-in.-diam O ring. A 3-1/2-in.-diam by 1/4-in.-thick window was seated against this O ring and held in place by a window retainer flange. The window construction is shown in cross section in fig. 2. Damage to the window by the retainer flange was prevented by placing a 1/16-in. thickness of Garlock packing material between the window and the flange. A cross section of the vacuum jacket for the second counter is shown in fig. 4. The jacket was 8-in. in diam by 33-in. long, with a 1/16-in.-thick wall. The window was a 12- by 4-1/2-in. rectangle joined to semicircles of 2-1/4-in. radius on both ends, thus giving an overall length of 16-1/4 in. The design of the window frame and retainer flange was similar to that described in detail for the prototype counter.

The windows of both counters were ultraviolet-transmitting lucite. For the prototype counter the window thickness was 1/4 in., but on the large counter it was 1/2 in. For a short time, a quartz window was used in the prototype counter and proved to be satisfactory although considerably more

expensive than lucite. Care was taken in the operation of the counters to prevent thermal shocking of the plastic windows. The most common cause of such a shock, of course, is partial loss of the insulating vacuum. Thus, the liquid hydrogen could not be removed from the system by the usual method of "spoiling" the vacuum, and a small heater had to be installed on the reservoir. To avoid stresses that would result in the window if the light pipe were bonded to it with epoxy cement, the light pipe was pressed against the window by a clamp and Dow-Corning silicone oil used to provide optical contact.

In both of the counters the vacuum jackets were hydrostatically tested to 150 psig. The prototype flask was filled with liquid nitrogen, placed in vacuum and then pressurized to 25 psig. A similar test on the large flask was carried out to 15 psig.

With the exception of the window region, the flasks were wrapped with ten double layers of insulation, consisting of 0.001-in. aluminum foil and 0.0005-in. aluminized mylar. In the case of the large counter the flask was prevented from touching the vacuum jacket by two snug fitting styrofoam rings of approximately 1/2- by 1/2-in. cross section.

Before the light pipes and photomultipliers were installed, the flasks were filled with hydrogen and observed visually, and the temperature of the windows was measured. After the initial filling with liquid hydrogen, approximately 1 hr was required for the flask to cool to liquid-hydrogen temperature. After this time no boiling was observed in that volume of the flask which was to be used as a Čerenkov radiator. The temperature at the outside of the window was measured to be the same as that of the room for the prototype counter, and about 7°C below room temperature for the large counter.

III. EXPERIMENTAL TESTS OF THE APPARATUS

A. Tests of the Prototype

The prototype counter was installed in a parasitic secondary beam of the Bevatron for evaluation. Figure 5 indicates the geometry used in these tests. Scintillation counters S_1 and S_2 limited the trajectories of beam particles to a 2-in. -deep region about the central horizontal plane of the flask. The water Čerenkov counter C, placed near S_2, was used as a means of separating the pions from the protons in one of the tests.

The momentum resolution of the positive beam of particles used in these tests was very low. Both a bending-magnet curve and a range curve indicated that this resolution was of the order of ±17%, while the range curve in lead gave a central momentum of 980 MeV/c for the protons in the beam. Table I summarizes the relevant kinematic properties of the protons found in the beam for the maximum spread of momentum values indicated by the range curve. This part of the table suggests two ways of separating high- and low-velocity beam constituents. First, a Čerenkov counter using distilled water as the radiator has a velocity threshold of $\beta = 0.75$ and cannot detect the beam protons which have a maximum velocity of about $\beta = 0.74$. Such a counter is shown as part of the experimental arrangement in fig. 5. A second method of separation is the addition of 180 g/cm² of lead absorber between C and S_2 to stop all of the protons, but not the pions and the muons. The velocities with which these latter particles traversed the liquid hydrogen were well above the Čerenkov threshold velocity, $\beta_c = 0.96$, for this medium, and hence were counted efficiently.

The first test used the coincidence (S_1CS_2), with no lead, to select the fast particles only. While this rate was monitored, the coincidence $(S_1CS_2)H$ was formed. The efficiency of detecting fast particles in the hydrogen counter, H, is the ratio of these rates.

$$\epsilon_1 = \frac{(S_1 C S_2)}{(S_1 \bar{C} S_2)} \qquad \text{(no absorber)}$$

The fraction of these counts that was spurious was measured by removing the liquid hydrogen from its container. This ratio is called ϵ_1.

The number of counts in the rate $(S_1 \bar{C} S_2)$ which are produced by protons (causing knock-on electrons, etc.) was measured by placing the water counter in anticoincidence with S_1 and S_2, thus forming $(S_1 \bar{C} S_2)$. These signals were then monitored and also placed in coincidence with the hydrogen counter. The ratio of these rates, which gives the fraction of slow, unwanted particles that are nonetheless counted, is

$$\eta = \frac{(S_1 \bar{C} S_2) H}{(S_1 \bar{C} S_2)}$$

To determine how many of these unwanted counts were due to spurious effects other than Čerenkov radiation in the hydrogen, we emptied the vessel of hydrogen and remeasured the above ratio to give η'. Although η' is more than half of the value of η, it is sufficiently small to warrant little detailed investigation. However, it was verified that these "no-hydrogen, slow-particle" counts were not random coincidences by changing the time delays of the counter. In fact, the random background was an order of magnitude smaller than η'.

The detection efficiency for charged particles was measured independently by placing 180 g/cm^2 of lead in the counter telescope between counters S_2 and C. From the range curve it was clear that this absorber would stop all protons in the beam. The efficiency, ϵ_2, was then determined from

$$\epsilon_2 = \frac{(C_1C_2)}{S_1S_2} \qquad \text{(absorber present)}$$

Finally, it was a simple matter to require both the ranges and the water Čerenkov counter to give a third evaluation of ϵ, that is,

$$\epsilon_3 = \frac{(S_1C_1C_2)}{S_1C_2}, \qquad \text{(absorber present)}$$

Table 2 summarizes the measured results of the efficiencies, ϵ and η, discussed above.

2. Tests of the Final version of the Counter

A preliminary test of the final counter was made by using cosmic-ray muons. These results are tabulated in table 3; they indicate that the light collection was satisfactory.

Finally, to measure the efficiency of detection for relativistic electrons originating in the liquid hydrogen, a beam of positive muons was brought to rest in the flask. Figure 6 shows a plan view of the experimental arrangement. The incident beam was a mixture of positive pions, muons, and electrons of 150-MeV/c momentum. After traversing an ion-chamber monitor, the beam energy was degraded in a 1-5/8-in. aluminum absorber before entering the thin end window of the hydrogen flask. An anticoincidence counter at the end of the flask rejected particles that were not stopped in the hydrogen. The decay electrons from muons were detected by a separate counter telescope mounted at right angles to the incident beam. The solid angle of acceptance of this telescope was defined by two scintillation counters, and a water Čerenkov counter insured that only fast particles were detected. The coincidence $S_1S_2S_3\bar{S}_6$ signified a stopping particle in the liquid hydrogen and was used to open a 5-μsec gate after a 0.5-μsec delay. If a coincidence $E_1E_2E_3$ was recorded within this gating period, it was assumed that the decay electron from the muon had been detected. To determine

the efficiency with which these electrons produced detectable Čerenkov radiation in the liquid hydrogen, the ratio of rates ($E_1E_2E_3$) counts to $E_1E_2E_3$ counts was measured. During these measurements the electron telescope ($E_1E_2E_3$) was placed at several different points along the beam line. The results of the measurements are tabulated in table 4 where the distance of the electron-telescope axis from the entrance end of the hydrogen flask is indicated by x. Background rates were taken with no hydrogen in the flask.

IV. RESULTS

The various measurements summarized in table 2 show that the prototype counter was approximately 97% efficient for detecting fast particles, while only 0.5% of the slow particles traversing the counter gave a spurious count. That the counter was not 100% efficient can be attributed to poor light collection when used in this experimental geometry. It is seen in table 3 that this efficiency increases to about 95% for the final counter (on cosmic rays), primarily because of the higher light-collection efficiency. The ratio of spurious to desired counts for the prototype counter is only 1 to 2% and this is satisfactory for most experimental applications. The comparable result for the final counter, shown in table 3, seems higher (~7%), but this is believed to be only the effect of the particular method of testing. Cosmic-ray showers initiated in the concrete roof of the testing area can easily cause one or more particles to pass through the lucite light pipe of the counter, while another shower particle passes through the cosmic-ray telescope and the emptied hydrogen counter. Thus 7% represents an upper limit to the spurious counts, and it is believed that the true figure is more nearly 1 to 2%.

As seen from table 4 and Fig. 6, the efficiency for detecting relativistic

particles produced by a stopping μ^+ beam is about 75% when averaged over the volume of liquid hydrogen. The difference between this value and the value of 95% found from the cosmic-ray tests is attributable to the fraction of electron secondaries from μ^+ decay which have too short a path in the hydrogen to produce a detectable number of Čerenkov photons.

The unexpected feature of the operation of the final counter was noticed when it was placed in a low-energy negative beam from the Bevatron. It was observed that, following each beam pulse, there remained a residual counting rate which decayed with a time constant of a few seconds. No exhaustive study of this effect was made, and at the present time it is not understood. Since this decay rate is not exceedingly high, the effect should not cause an appreciable accidental counting rate in most experiments using coincidence arrangements with moderate time resolution.

V. ACKNOWLEDGMENTS

The authors wish to express their appreciation to the many members of the staff of the 184-Inch Cyclotron and the Bevatron of the Lawrence Radiation Laboratory who helped with the experimental tests of this apparatus. Credit is due especially Messrs. E. McLaughlin, W. L. Pope, H. E. Masock, R. Z. Fuzesy, and René Bollaert of the Hydrogen Target Group for their untiring efforts in the design and test work throughout this program.

FOOTNOTES AND REFERENCES

*This work was done under the auspices of the U. S. Atomic Energy Commission

†Supported by the National Science Foundation

1. J. V. Jelley, Čerenkov Radiation and Its Applications (Pergamon Press, New York, N. Y., 1958).

2. S. Jackman, "Hydrogen-Target Lecture Notes," Appendix II in Procedures for the Design and Operation of Hazardous Research Equipment, Lawrence Radiation Laboratory Report UCRL-9711 October 1961

Table 1. Kinematic properties of protons in the positive beam of 880-MeV/c

p (MeV/c)	β	R (g/cm² of lead)
[illegible]	0.53	49
880	0.65	134
1027	0.74	180

Table 2. Measured values of the counting efficiencies for the prototype

$\epsilon_3 = 0.3[illegible] \pm 0.011$

$\epsilon_1 = 0.005 \pm 0.001$

$\epsilon_2 = 0.340 \pm 0.003$

$\epsilon_2' = 0.004 \pm 0.001$

$\epsilon_3 = 0.357 \pm 0.014$

$\eta = 0.0025 \pm 0.0005$

$\eta' = 0.0016 \pm 0.0002$

Table 3. Cosmic-ray tests of the detection efficiency of the final version of the counter

Liquid hydrogen	Counts	
	Scintillation telescope only	Scintillation telescope plus liquid hydrogen
In	706	679
Out	309	20

Table 4. Experimental results on the detection efficiency of the liquid-hydrogen Čerenkov counter for electrons from muon decay

Liquid hydrogen	x (inches)[a]	Gated ($E_1E_2E_3$)	Gated ($E_1E_2E_3$+H)	Ratio
In	13	417	341	0.82 ± 0.04
Out	13	5	39	—
In	7	285	199	0.70 ± 0.03
Out	7	19	1	—

[a] See fig. 4.

LIST OF FIGURES

Fig. 1. Aluminized mylar flask used to contain the liquid hydrogen of the prototype counter.

Fig. 2. Section view of the mylar flask and vacuum jacket of the prototype counter.

Fig. 3. Aluminized mylar flask of the final counter.

Fig. 4. Section view of the flask and vacuum jacket of the final counter.

Fig. 5. Experimental arrangement used in tests of the prototype carried out at the Bevatron.

Fig. 6. Experimental arrangement used in tests of the detection efficiency of the final counter at the 184-inch Cyclotron.

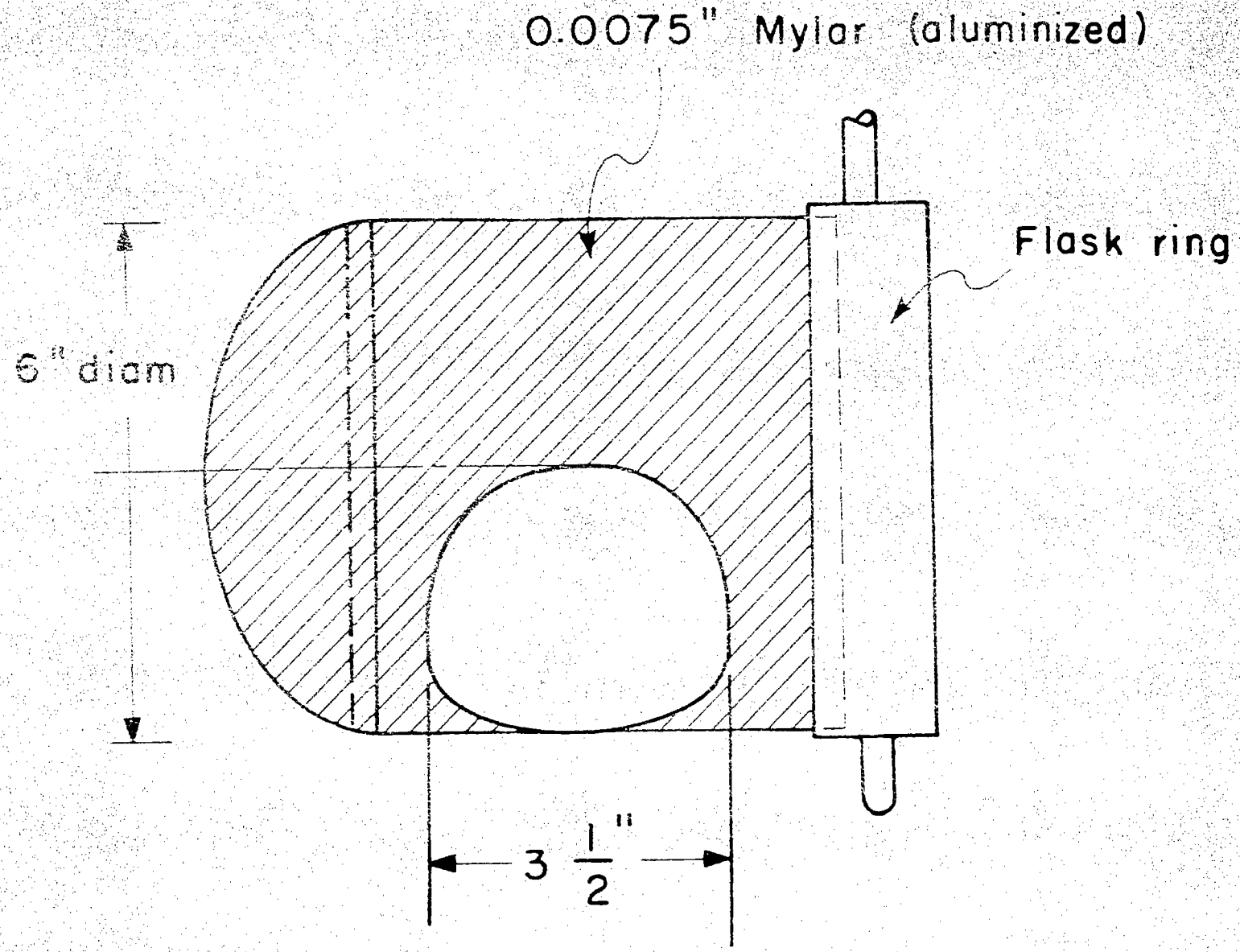

Fig. 1 (a)

MU-30491

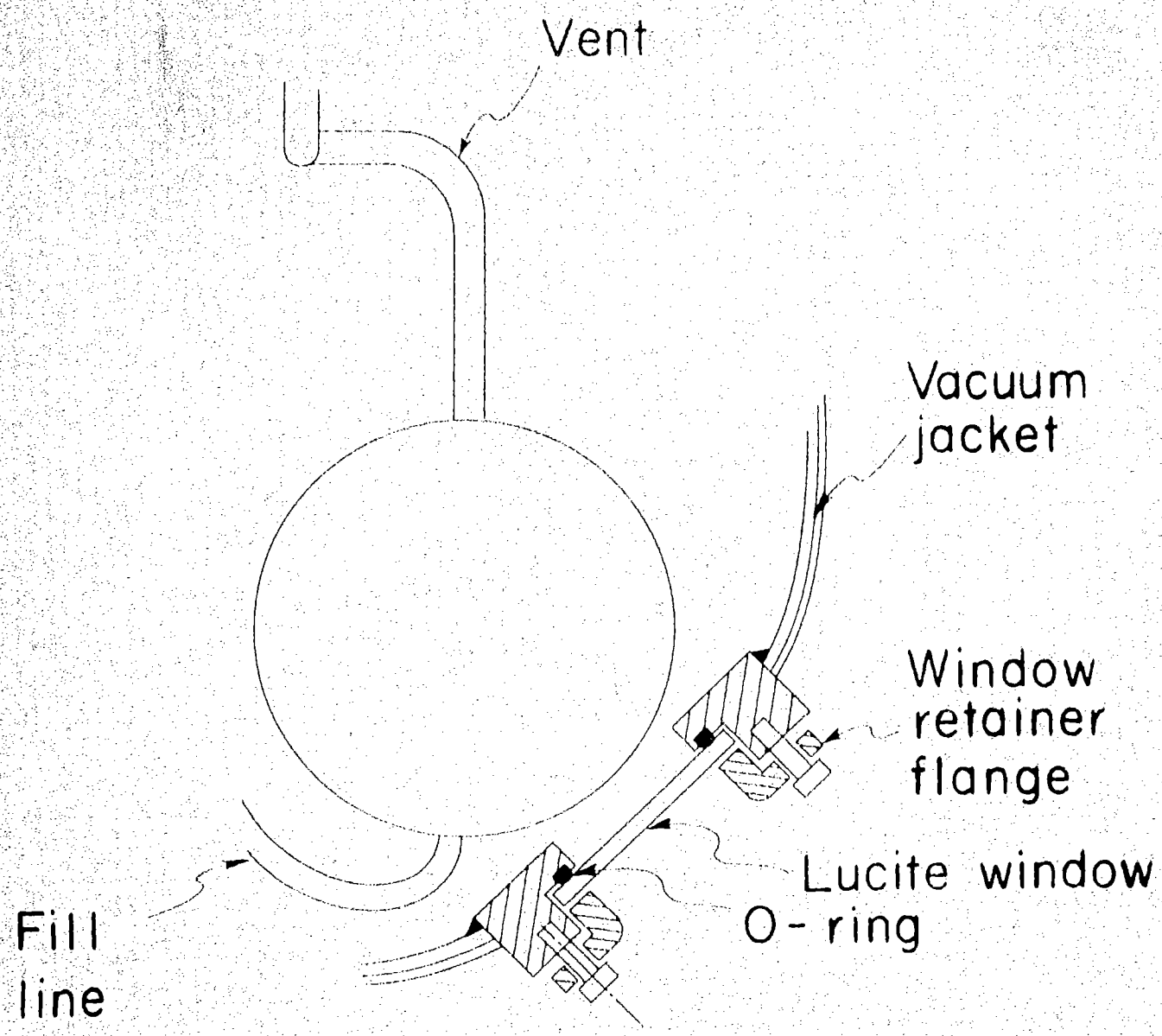

Fig. 1 (b)

MU-30490

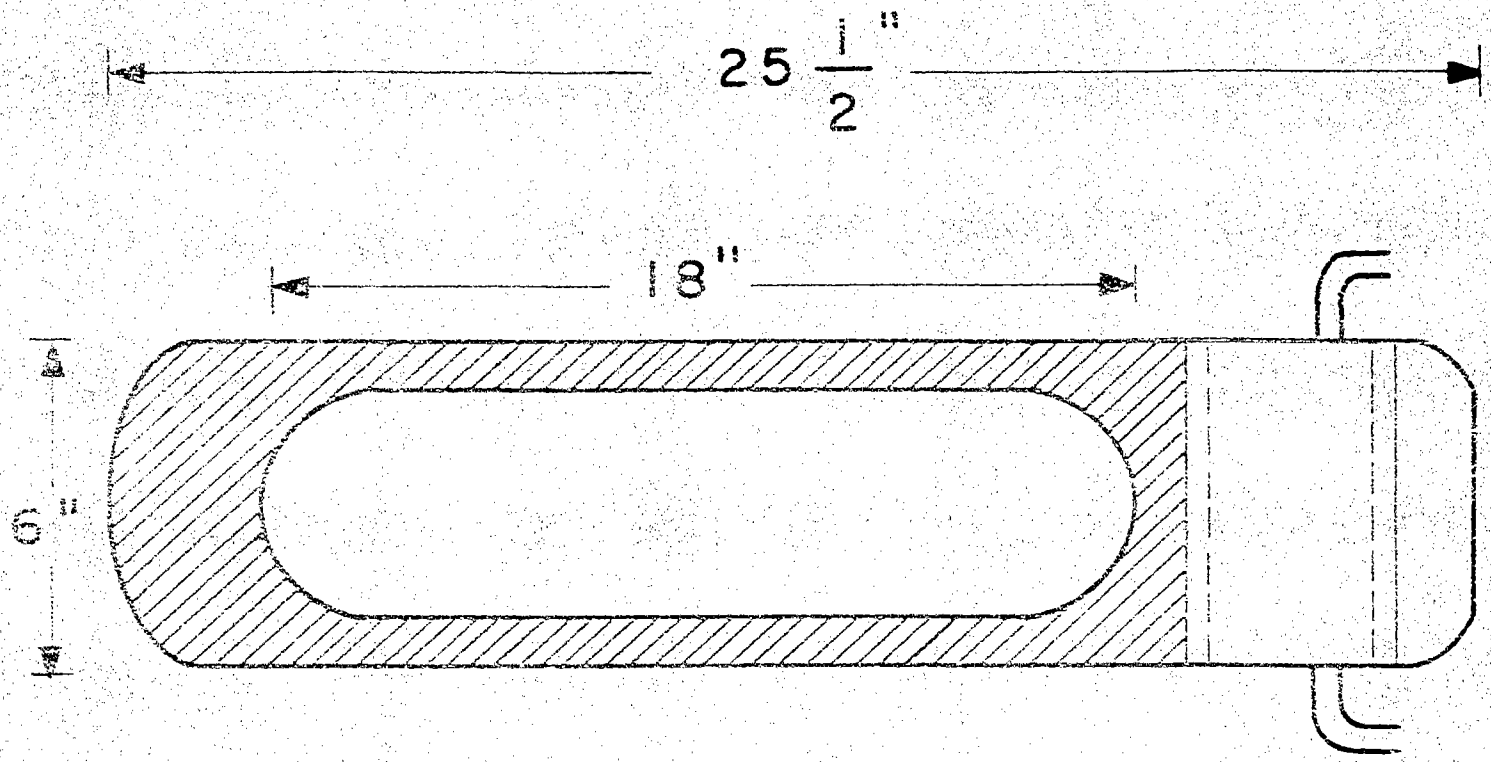

Fig. 2 (a)

MU-30492

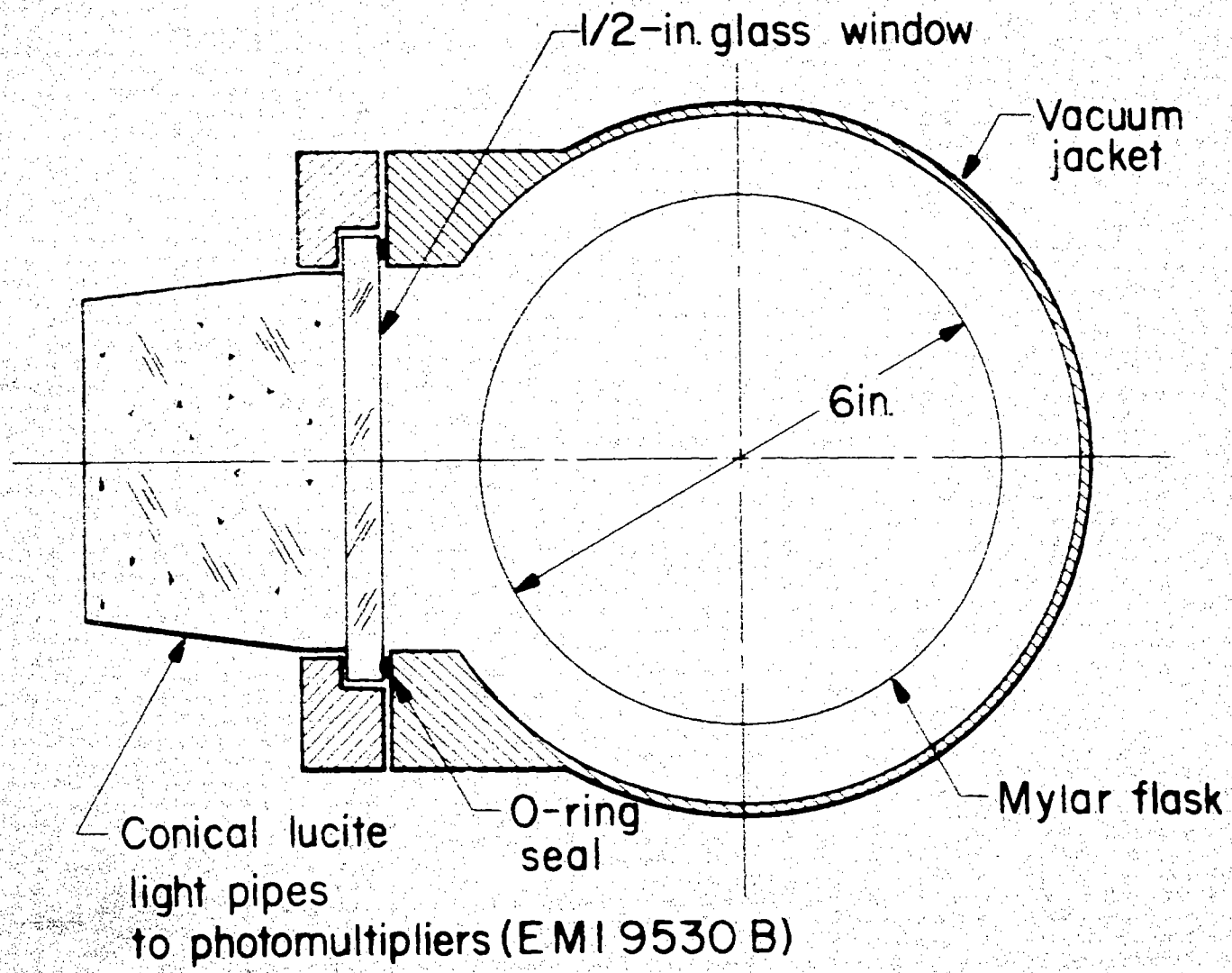

Fig. 4

MU-30585

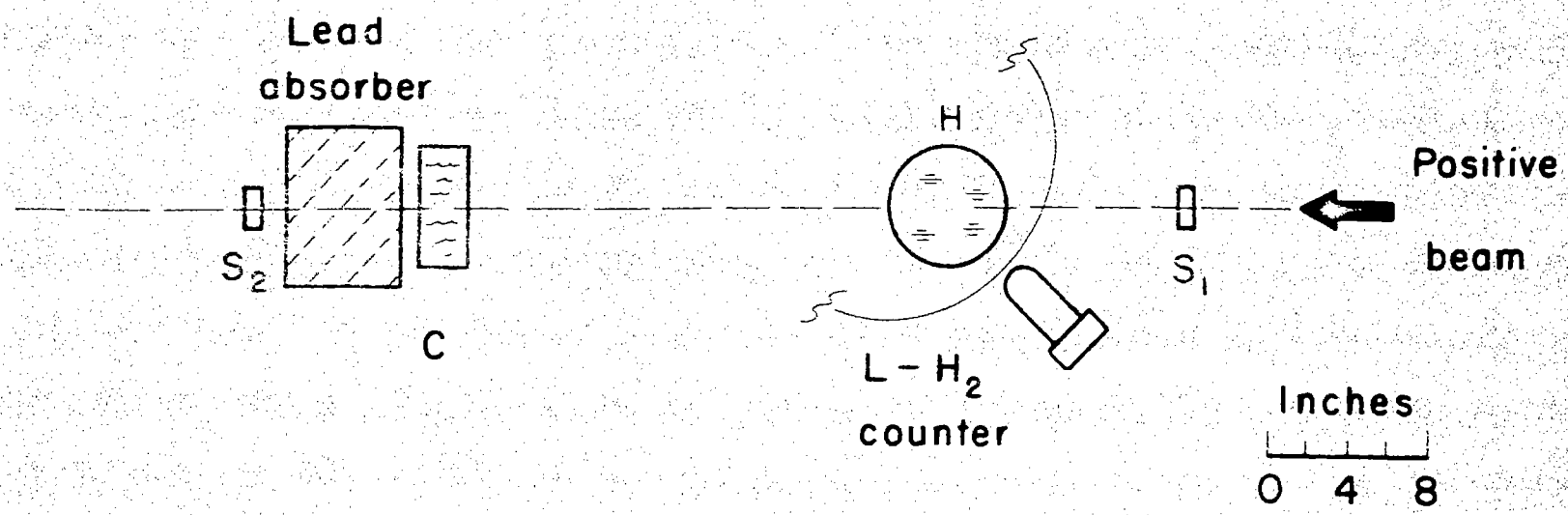

Fig. 5

MU-30493

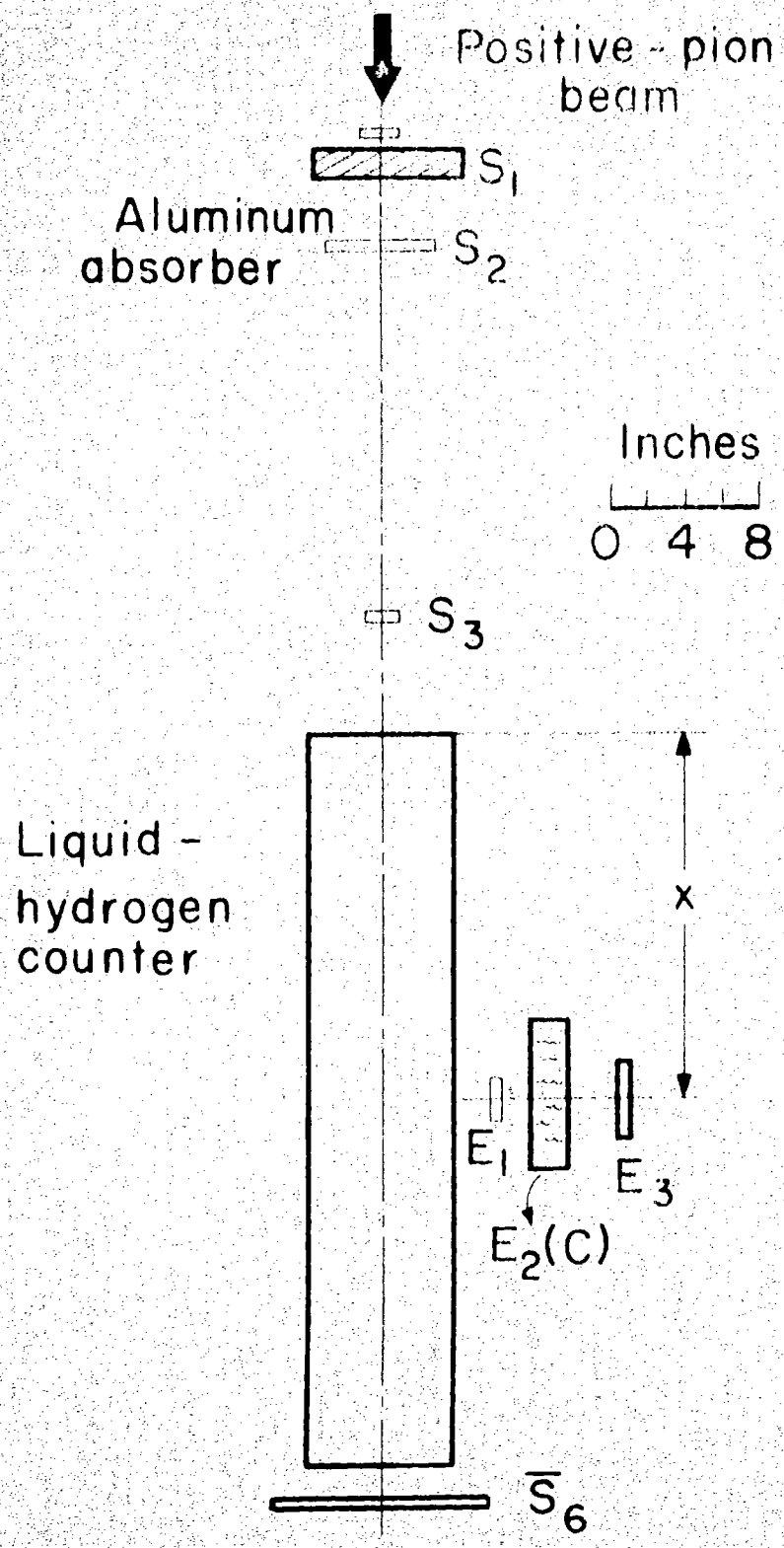
Positive - pion beam
S_1
Aluminum absorber
S_2
Inches
0 4 8
S_3
Liquid - hydrogen counter
x
E_1
E_3
$E_2(C)$
$\overline{S}_6$
MU-30494

Fig. 6

This report was prepared as an account of Government sponsored work. Neither the United States, nor the Commission, nor any person acting on behalf of the Commission:

A. Makes any warranty or representation, expressed or implied, with respect to the accuracy, completeness, or usefulness of the information contained in this report, or that the use of any information, apparatus, method, or process disclosed in this report may not infringe privately owned rights; or

B. Assumes any liabilities with respect to the use of, or for damages resulting from the use of any information, apparatus, method, or process disclosed in this report.

As used in the above, "person acting on behalf of the Commission" includes any employee or contractor of the Commission, or employee of such contractor, to the extent that such employee or contractor of the Commission, or employee of such contractor prepares, disseminates, or provides access to, any information pursuant to his employment or contract with the Commission, or his employment with such contractor.