UCRL-10748
c.2

# University of California

# Ernest O. Lawrence Radiation Laboratory

TWO-WEEK LOAN COPY

*This is a Library Circulating Copy which may be borrowed for two weeks. For a personal retention copy, call Tech. Info. Division, Ext. 5545*

## MOMENTUM TRANSFER IN HEAVY-ION-INDUCED REACTIONS

Torbjørn Sikkeland and Victor E. Viola, Jr.

April 7, 1963

Berkeley, California

10748
c.2

## DISCLAIMER

This document was prepared as an account of work sponsored by the United States Government. While this document is believed to contain correct information, neither the United States Government nor any agency thereof, nor the Regents of the University of California, nor any of their employees, makes any warranty, express or implied, or assumes any legal responsibility for the accuracy, completeness, or usefulness of any information, apparatus, product, or process disclosed, or represents that its use would not infringe privately owned rights. Reference herein to any specific commercial product, process, or service by its trade name, trademark, manufacturer, or otherwise, does not necessarily constitute or imply its endorsement, recommendation, or favoring by the United States Government or any agency thereof, or the Regents of the University of California. The views and opinions of authors expressed herein do not necessarily state or reflect those of the United States Government or any agency thereof or the Regents of the University of California.

UCRL-10748

UNIVERSITY OF CALIFORNIA
Lawrence Radiation Laboratory
Berkeley, California

Contract No. W-7405-eng-48

# MOMENTUM TRANSFER IN HEAVY-ION-INDUCED REACTIONS

Torbjørn Sikkeland and Victor E. Viola, Jr.

April 7, 1963

# MOMENTUM TRANSFER IN HEAVY-ION-INDUCED REACTIONS

Torbjørn Sikkeland and Victor E. Viola, Jr.

Lawrence Radiation Laboratory
University of California
Berkeley, California

April 7, 1963

## ABSTRACT

A three-dimensional fragment-fragment angular-correlation method is used to study reactions that take place between $Ho^{165}$, $Au^{197}$, and $U^{238}$ and various ions of 10.4 MeV/nucleon. For ions such as $C^{12}$, $O^{16}$, and $Ne^{20}$ impinging on $U^{238}$, two peaks are observed in the correlation function. The larger and narrower one corresponds to a complete amalgamation of the ion with the target nucleus. For lighter targets, only this peak is observed. The vertical and horizontal spreads of this peak are correlated to neutron evaporation and to the fragment's mass and momentum spreads. The average number of neutrons emitted and their kinetic energy, 2T, are deduced from the experimental data. For all the system, 2T was found to be between 4.0 and 4.6 MeV. The method does not allow one to say if the neutrons are emitted from the fragments or the fissioning nucleus. For the system $He^4 + U^{238}$, the neutrons are found to be emitted isotropically to within 4%.

In analyzing the second peak, it is found that the fissioning nucleus has a momentum at an angle to the momentum of the ion. Values for the average momenta and angles of the fissioning nucleus and the stripped ion are obtained. The ion revolves with the nucleus for about 15 deg, during which approximately four nucleons are transferred. The cross section for these types of surface

reactions is around 25% of the total fission cross section for $C^{12}$, 30% for $O^{16}$, and 40% for $Ne^{20}$.

We observe surface reactions also at lower bombarding energies. The stripped ion is emitted at increasing angles as the velocity of the ion decreases. This results in a relative increase in the forward momentum, which is approaching that of the heavy ion, thereby complicating analysis of the data.

# MOMENTUM TRANSFER IN HEAVY-ION-INDUCED REACTIONS *

Torbjørn Sikkeland and Victor E. Viola, Jr.

Lawrence Radiation Laboratory
University of California
Berkeley, California

April 7, 1963

## I. INTRODUCTION

In earlier papers, we reported experimental results from angular-correlation studies of fragment pairs from fission induced by various heavy ions.[1,2] The objective of the experiments was to analyze the momentum transferred by heavy ion to a target nucleus that undergoes fission as a result of the impact. This then limits the studies to reactions where the excitation energies are higher than the fission barrier.

## II. EXPERIMENTAL PROCEDURE

The experimental technique consists of detecting coincident fission fragments with two surface-barrier silicon-diode crystals. From each crystal a "slow" linear pulse and a "fast" pulse were extracted. A slow-coincidence unit output, consisting of the two linear pulses and a fast-coincidence unit output pulse, served as a trigger pulse for two 100-channel pulse-height analyzers. Thus, to be recorded, an event had to meet the quadruple coincidence requirements and at the same time produce pulse heights characteristic of fission fragments. Experiments were performed with one detector at 90 deg to the beam axis and in the horizontal plane containing the beam axis. The mount for the second detector was constructed so that it moved about the radius of a sphere whose center coincided with the point at which the beam struck the target. The

position of this detector was adjusted by means of a horizontal radial arm on which it was mounted. The angle of this arm with respect to the beam is defined as $\psi$. A vertical radial arm permitted the detector to be raised or lowered. The angle of the detector with respect to the horizontal plane is defined as $\xi$. The correlation function $W(\xi,\psi)$ then was determined by measuring the fragment-fragment coincidence rate in relative units as a function of the position $(\xi,\psi)$ of the detector.

Until now, we have measured correlation functions for fragment pairs from fission in the systems $(Ho^{165} + O^{16})$, $(Au^{197} + O^{16})$ and $U^{238}$ + various ions. In all cases the ion energy was 10.4 MeV/ nucleon.

## III. EXPERIMENTAL RESULTS

A contour diagram of the correlation function for the system $U^{238}$ + 165-MeV $O^{16}$ is given in Fig. 1. This is typical for reactions between $U^{238}$ and 10.4-MeV/ nucleon heavy ions where $W(\xi,\psi)$ can be separated into two peaks. The high narrow peak is denoted by the CF (complete fusion), since it will be shown later that the events comprising this peak come from nuclei formed by a complete fusion of target nucleus and accelerated ion. The other peak is called the ICF (incomplete fusion) peak since in this case, the fissioning nuclei are formed in an incomplete fusion process. With $Ho^{165}$ and $Au^{197}$ as targets and for the system $U^{238} + He^{4}$, only the CF peak appears.

The function $W(\xi,\psi)$ for a particular peak can be separated into two families of functions, $W(\xi)$ with $\psi$ = Const., and $W(\psi)$ with $\xi$ = Const. These curves have typical shapes and can, except for the $W(\psi)_{ICF}$ curves, be fitted to a Gaussian distribution. The $W(\psi)_{ICF}$ curves are only approximately symmetric and have a skewness toward lower $\psi$ values. The functions exhibit

maxima at angles $W(\bar{\xi}_{CF})$, $W(\bar{\xi}_{ICF})$, $W(\bar{\psi}_{CF})$, and $(\bar{\psi}_{ICF})$. It appears that, within experimental errors we have $\bar{\xi}_{CF} = \bar{\xi}_{ICF} = 0$, independent of $\psi$. Similarly, we find $\bar{\psi}_{CF}$ and $\bar{\psi}_{ICF}$ to be independent of $\xi$.

The halfwidths at half maximum for the peaks in the $W(\xi)$ family, denoted by $\sigma_{\xi CF}$ and $\sigma_{\xi ICF}$, and in the $W(\psi)$ family, $\sigma_{CF}$ and $\sigma_{ICF}$, were also shown to be independent of one another. The correlation function $W(\xi,\psi)$ for each reaction can therefore be characterized by the quantities $\psi$, $\sigma_\xi$, and $\sigma_\psi$. These values for all the systems are given in Table 1. Here $\bar{\xi}$ is always zero and is therefore not listed; $\sigma_\xi$ and $\sigma_\psi$ have been corrected for angular resolution. The value of $\sigma_\psi$ for $U^{238} + He^4$ agrees well with that reported by Nicholson and Halpern.[3]

In the following, we attempt to interpret these results.

## IV. DISCUSSION

Figure 2 is a schematic representation of the angular relations in momentum space for a binary-fission event. The fissioning nucleus of mass M has a laboratory momentum $\vec{P}_N$ at an angle $\theta_N$ with the momentum $\vec{P}_I$ of the ion, and $\vec{P}_S$ represents the momentum of a third body of mass $m_S$. The angle between the projection of $P_N$ in the zy plane and the y axis is called $\alpha$. From symmetry arguments, $\alpha$ can assume any value from 0 to $2\pi$ with equal probability.

The intrinsic masses of the fragments are $m_1$ and $m_2$, and their momenta in the center-of-mass (c.m.) system of the fissioning nucleus are $\vec{P}_1$ and $\vec{P}_2$. From the law of conservation of momentum, we have $\vec{P}_1 = -\vec{P}_2$. In the laboratory (lab) system, the directions of the fragments are given by

the angles $(\xi_1,\psi_1)$ and $(\xi_2,\psi_2)$ as defined above. In our experiments we have detector 2 at $(0, 3\pi/2)$. A straightforward momentum analysis then gives these conditions for observing a fragment at that position:

$$P_{2X} = -\frac{m_2}{M} P_{NX} = -P_{1X} \tag{1}$$

$$P_{2Z} = -\frac{m_2}{M} P_{NZ} = -P_{1Z} \, . \tag{2}$$

Fragment 1 coincident with 2 will then be observed at a position $(\xi,\psi)$ for which

$$\sin\xi = \left(\frac{m_1}{M} P_{NZ} + P_{1Z}\right) / P_f = P_{NZ}/P_f = \left(P_N \sin\theta_N \sin\alpha\right)/P_f \tag{3a}$$

$$\cos\psi = P_{NX}/P_f \cos\xi \simeq (P_N \cos\theta_N)/P_f \, . \tag{4a}$$

Here we have set $\cos\xi \simeq 1$, since the angles $\xi$ is usually very small. The quantity $P_f$ is the intrinsic laboratory momentum of fragment 1. After averaging over the angle $\alpha$, $P_f^2$ is given by

$$P_f^2 = P_C^2 + \frac{m P_N^2}{M^2} \left[M + (M-m) \cos^2\theta_N\right] \tag{5a}$$

where for convenience we now denote $m$ as the intrinsic mass and $P_C$ as the intrinsic c.m. momentum of the fragment.

In high-energy fission, symmetric division is the most probable and average event and thus $\langle m \rangle = 1/2\ M$. Experimentally we find $W(\xi,\psi)$ to extend over small ranges of $\xi$ and $\psi$. We obtain therefore these average values:

$$\sin\bar{\xi} \simeq \langle \sin\xi \rangle = 0 \tag{3b}$$

$$\cos\bar{\psi} \simeq \langle \cos\psi \rangle = \langle P_N \cos\theta_N \rangle / \langle P_f \rangle \tag{4b}$$

$$\langle P_f^{\,2} \rangle = \langle P_C^{\,2} \rangle + 1/4 \, \langle P_N^{\,2} \rangle \left[ 1 + \langle \cos^2\theta_N \rangle \left( 2 - \left( \frac{\sigma_m}{\langle m \rangle} \right)^2 \right) \right] \tag{5b}$$

where $\sigma_m$ is the half width of the mass distribution. Emission of particles from the fragments change their directions. However, in an isotropic emission the average direction of fragment 1 in coincidence with fragment 2 is determined by relations (3b), (4b), and (5b).

If we ignore evaporation, the angular correlation frunctions $W(\xi)$ and $W(\psi)$ are governed by (3a), (4a), and (5a). Variances $\sigma_\xi^{\,2}$ and $\sigma_\psi^{\,2}$ of functions (3a) and (4a) respectively are

$$\sigma_\xi^{\,2} = 1/2 \; \langle P_N^{\,2} \sin^2\theta_N \rangle / \langle P_f^{\,2} \rangle \tag{6}$$

$$\sigma_\psi^{\,2} \sin^2 \bar{\psi} + \cos^2 \bar{\psi} = \langle P_N^{\,2} \cos^2\theta \rangle / \langle P_f^{\,2} \rangle \, . \tag{7}$$

We have then substituted the value of $\langle \sin^2\alpha \rangle = 1/2$ and used the fact that, over small ranges of $\xi$ and $\psi$, the variances of $\sin\xi$ and $\cos\psi$ are $\sigma_\xi^{\,2}$ and $\sigma_\psi^{\,2} \sin^2 \psi$, respectively. Combining (6) and (7) yields

$$\langle P_N^{\,2} \rangle = (2\sigma_\xi^{\,2} + \sigma_\psi^{\,2} \sin^2 \bar{\psi} + \cos^2\bar{\psi}) \; \langle P_f^{\,2} \rangle . \tag{8}$$

If we further set $\langle P_N^{\,2} \sin^2\theta_N \rangle = \langle P_N^{\,2} \rangle \, \langle \sin^2\theta_N \rangle$, we obtain

$$\langle \tan^2\theta_N \rangle = 2\sigma_\xi^{\,2}/(\sin^2\bar{\psi}\ \sigma_\psi^{\,2} + \cos^2\bar{\psi}\ ). \qquad (9)$$

Equations (8) and (9) therefore relate the experimental values of $\sigma_\xi$ , $\sigma_\psi$ , and $\bar{\psi}$ to the momentum and angle of the fissioning nucleus.

Examining Eqs. (3b), (4b), (5b), (6), and (7) we see that in general $\langle P_C^{\,2} \rangle$ , $\langle P_N^{\,2} \rangle$ , $\theta_N$ , and $(\sigma_m/\langle m \rangle)^2$ are independent of $\xi$ and $\psi$ . Hence, $\bar{\xi}$ and $\sigma_\xi$ will be independent of $\psi$ , and $\bar{\psi}$ and $\sigma_\psi$ independent of $\xi$ . This is also what we observe experimentally.

In the following sections, we use the above relations to analyze in some detail the angular-correlation functions. The CF and the ICF peaks are treated in separate sections. At the end, the magnitude of the cross sections are discussed.

## A. Complete Fusion Reactions

In a CF reaction the momentum of the compound nucleus equals the momentum of the ion. If $n_N$ nucleons are evaporated before fission, the average momentum of the nucleus is

$$\bar{P}_N = P_I \left(1 - \frac{n_N}{M_C}\right) ,$$

where $M_C$ is the mass of the compound nucleus. We also have $\bar{\theta}_N = 0$ and we obtain the average value

$$\langle \cos^2\psi \rangle = \sigma_\psi^{\,2}\ \sin^2\bar{\psi} + \cos^2\bar{\psi} = \langle P_N^{\,2} \rangle / \langle P_f^{\,2} \rangle$$

The condition for full momentum transfer can be tested with this formula. Values for $\langle P_f^2 \rangle$ are obtained from measurements of the kinetic-energy release,[4] after correction of the average momentum loss due to neutron evaporation from the fragments. We then set $\langle P_f^2 \rangle = 2\bar{m} \langle E_f \rangle$. For the average momentum of the fissioning nucleus, one usually ignores the neutron evaporation and set $P_N = P_I$. This kind of analysis was described in a previous paper,[1] and the results were shown to be consistent with full momentum transfer. Experimental values for $\psi_{CF}$ obtained in the present work agree well with these earlier results. Therefore we do not discuss this aspect of the work here. Instead we consider in some detail the experimentally observed spreads of the correlation functions, starting with $\sigma_\xi^2$.

Ignoring neutron evaporation, we see from Eq. (6) that the variance $\sigma_\xi^2$ for a CF reaction is zero. Evidently, the observed spreads $\sigma_\xi$ result from emission of particles either from the fully accelerated fragments or from the c.m. system of the compound nucleus. We will consider the case where these particles are neutrons emitted isotropically.

For an isotropic emission of n neutrons from a recoiling nucleus of initial momentum $P_N$ and mass $M_C$, the variance $\sigma_\xi^2$ of the angular distribution function $W(\xi)$ is, to a good approximation,

$$\sigma_\xi^2 = \frac{\langle E_n \rangle}{P_N^2} \, n \left( 1 + \frac{n+1}{M_C} \right).$$

Here $\langle E_n \rangle$ is the average kinetic energy of the neutron where its momentum is $\langle P_n \rangle \ll P_N$, and its mass is 1 amu.

In the fragment-fragment correlation function, evaporation from both fragments and the compound nucleus contributes to the variance $\sigma_\xi^2$. Two extreme cases are considered. In case I, we assume that neutrons are emitted

only from the fully accelerated fragments. Then we obtain the approximate expression for the variance

$$\sigma_{\xi I}^{2} = \frac{N\langle E_n\rangle \cos^2\bar{\psi}}{2m_I E_I} \left(1 + \frac{\bar{N} + 2}{M_C}\right) ,$$

where $\bar{N}$ is the average value of the total number of neutrons emitted.

In case II, we assume that no neutrons are emitted from the fragments during or after acceleration. The neutrons are emitted only from the compound nucleus, from the nucleus between saddle and scission, or from the fragments before they are accelerated. In this case the variance is

$$\sigma_{\xi II}^{2} = \frac{N\langle E_n\rangle \cos^2\bar{\psi}}{m_I E_I \left(1 - \frac{\bar{N}}{M_c}\right)^2 + \bar{N}\langle E_n\rangle} .$$

A closer examination of $\sigma_{\xi I}^{2}$ and $\sigma_{\xi II}^{2}$ reveals that, for the systems we are considering for the same value of $\bar{N}$ and $\langle E_n\rangle$, the two expressions are practically identical. Therefore the question of whether the neutrons are emitted from the compound nucleus or from the fragments can not be answered from our data.

However, by using either of the two formulae for $\sigma_{\xi}^{2}$ combined with the law of conservation of mass and energy, we can obtain values for $\bar{N}$ and $\langle E_n\rangle$. Conservation of energy gives:

$$E_{c.m.} + Q = 2\langle E_c\rangle + \bar{N}\langle E_n\rangle + E_\gamma + E_R$$

Here $E_{c.m.}$ is the c.m. kinetic energy of the ion. Assuming symmetric division, we evaluate the Q value from the mass equation, taking values for the masses

from Cameron's Tables.[5] The average intrinsic energy of the fragments in the c.m. system of the fissioning nucleus $\langle E_c \rangle$, is taken from kinetic-energy measurements.[4] Here $E_\gamma$ is the energy of the $\gamma$ rays, and $E_R$ is the rotational energy of the system, both of which are not available for neutron emission. The rotational energy is estimated from the formula $E_R = \ell^2 \hbar^2/2\mathcal{F}$, where $\ell$ is the angular momentum and $\mathcal{F}$ the moment of inertia of the compound nucleus. For the large $\ell$ values involved in the systems considered (except $U^{238} + He^4$) we have to a good approximation the average value $\langle E_R \rangle = \langle \ell^2 \rangle \hbar^2/2\mathcal{F} = \frac{9}{8} \bar{\ell}^2 \hbar^2/2\mathcal{F}$, where values for $\bar{\ell}$ are taken from compound-nucleus-formation calculations. For $\hbar^2/2\mathcal{F}$ we have rather arbitrarily chosen a value of 5 keV.

For the system $U^{238} + He^4$, the estimated value for $\langle E_n \rangle$ is quite critical to the choice of the value for $E_\gamma$. The excitation energy here is quite low, and $E_R$ is negligible. For the other systems, we obtain similar values for $\langle E_n \rangle$ over a fairly wide range of $E_\gamma$. It is now reasonable to expect $\langle E_n \rangle$ to be equal or lower for $U^{238} + He^4$, because of the lower excitation energy. To achieve this, we must have $E_\gamma$ less than 15 MeV. We use $E_\gamma = 10$ MeV for all systems. Values for $(E_\gamma + E_R)$ and estimated values for $\bar{N}$ and $\langle E_n \rangle$ are given in Table I.

We notice a tendency for $\langle E_n \rangle$ to increase with $\bar{N}$, reflecting a possible increase in $\langle E_n \rangle$ with excitation energy. In our case $\langle E_n \rangle$ can be related to the nuclear temperature T. For an evaporation we have $\langle E_n \rangle = 2T$. However, we must remember that $\langle E_n \rangle$ represents the average neutron energy through the whole cascade. We find our values for T to be quite reasonable when compared to results from other type of experiments.[6-8] Therefore, we may conclude that neutron evaporation can account for the experimentally observed variances of $W(\xi)_{CF}$.

We now turn to the interpretation of the variance $\sigma_\psi^2$. From symmetry arguments, isotropic neutron emission introduces the same variance in $W(\psi)$ as in $W(\xi)$. Other contributing factors are seen from Eqs. (7) and (5b) to be spreads in the momentum of the fissioning nucleus and in momenta and masses of the fragments. In principle, one can obtain values for $\sigma_m/\langle m\rangle$ from the measured $\sigma_\psi^2$ values. However, small relative errors in the momenta of the fragments and the fissioning nucleus introduce too large uncertainties to make values for $\sigma_m/\langle m\rangle$ estimated this way meaningful.

For an isotropic emission of neutrons we have $\sigma_\psi^2 \to \sigma_\xi^2$ as $P_N \to 0$ (or $\bar{\psi} \to \pi/2$). Already we observe $\sigma_\psi^2 \simeq \sigma_\xi^2$ for $U^{238} + He^4$. From this result we conclude that no anisotropy is detected in the emission of neutrons for this system. However, the method is not sensitive enough for us to make similar statements about the other systems.

## B. Incomplete Fusion Reactions

The appearance of well-separated peaks in the fragment-fragment correlation functions for the systems $U^{238}$ + heavy ions suggests that the ICF reactions take place within a fairly narrow range of the momentum $P_{NX}$ of the fissioning nucleus. It is also observed that $\sigma_\xi^2$ is much larger than $\sigma_\psi^2$ in contrast to what was found for the CF reactions. The only explanation for these observations is that the struck nucleus is proceeding at some angle $\theta_N$ to the beam axis. Average values $\langle P_N^2\rangle$ and $\langle \tan^2\theta_N\rangle$ can be estimated from the $\bar{\psi}_{ICF}$, $\sigma_\xi^2$, and $\sigma_\psi^2$ values for the ICF peak according to Eqs. (8), (9), and (5b) developed above.

For all ICF systems, we have chosen $Pu^{242}$ as the most probable fissioning nucleus for which $\bar{m} = 121$ and $\bar{E}_C = 171$ MeV.[4] The choice of fissioning nucleus

is of minor importance, since $P_C^2$ has a small variation over the possible residual nuclei involved in an ICF process. However, $Pu^{242}$ is a quite reasonable choice as deduced from spallation studies.[9] The choice of value $(\sigma_m/\langle m\rangle)^2$ is also insensitive, since the last term in (5b) is only a few per cent of $\langle P_f^2\rangle$. Both $\sigma_\psi^2$ and $\sigma_\xi^2$ must be corrected for a contribution from neutron evaporation, which we will set equal to the variances $\sigma_\psi^2$ and $\sigma_\xi^2$ observed for the system $He^4$ and $U^{238}$, where approximately the same amount of excitation energy is deposited. Again this should not be critical, since the ICF spreads are much larger than those of the CF reactions.

The values $(P_N^2/P_I^2)$ and $(\tan^2\theta_N)$ calculated according to the outlined procedure are given in Table I. If we ignore the variances for $P_N$ and $\tan\theta_N$ we have

$$\langle P_N^2\rangle = \bar{P}_N^2$$

and

$$\langle \tan^2\theta_N\rangle = \tan^2\bar{\theta}_N .$$

The corresponding laboratory values $\overline{P_S}/P_I$ and $\bar{\theta}_S$ for the ion residue can be estimated then from the law of conservation of momentum (see Fig. 2). If we now further assume that the strippedion continues with the same velocity as the impinging ion, the average number of nucleons, $\bar{N}_T$, transferred to the nucleus can be evaluated. Values for $\bar{P}_S/P_I$, $\bar{\theta}_S$, and $\bar{N}_T$ are given in Table I.

The apparent tendency for $\bar{N}_T$ to decrease with increasing mass of the ion is regarded as accidental, reflecting more the experimental uncertainties and the crudeness of the analysis. In addition, the velocity of the stripped ion is probably reduced slightly as a result of the impact,[10]

resulting in the same relative decrease in $\overline{N}_T$ . Taking this into account, we can state, however, that on the average between three and four nucleons are transferred from the ions $C^{12}$, $O^{16}$, and $Ne^{20}$.

The angle $\theta_S$ is also seen to be nearly the same for the three systems. We will explore the implications of the latter result in the following discussion.

Measurements have shown that the total fission cross section is nearly equal to the total interaction cross section.[11] Fission then takes place for ions with $\ell$-waves up to a certain cut-off value $\ell_R$ . Since events in the ICF peak probably result from surface-type reactions, it is reasonable to assume that the highest $\ell$ -waves are involved. Their manifestation as a distinct peak in the correlation function also means a lower cutoff in the $\ell$ -waves. We can then imagine that the CF reactions take place for $\ell$-waves up to a value $\ell_{CF}$ , and the ICF reactions take place for $\ell$-waves from $\ell_{CF}$ to $\ell_R$ . These $\ell$ values estimated from the measured cross sections $\sigma_{CF}$ and $\sigma_R$ according to a procedure described in reference (11) are given in Table 1.

To a first approximation, the average $\ell$ -value involved in the ICF reactions is $(\ell_{CF} + \ell_R)/2$. In an elastic event the ions in this $\ell$-wave would have been scattered into an angle of 50 deg. This is to be compared to 35 deg for $\theta_S$. This means that the ions actually rotate with the nucleus for about 15 deg, during which the transfer takes place.

The spreads $\sigma_{\psi ICF}$ reflect spreads in the number and velocity of nucleons transferred and in the number of $\ell$-waves involved. The shape of the $W(\psi)_{ICF}$ functions with a skewness toward lower $\psi$ values is then connected with a skewness in the distribution in some or all of the factors mentioned above.

With lighter targets, the ICF peak is not observed or is very much suppressed.[1] This supports the above conclusions that the four-nucleon transfer is the most abundant of the ICF reactions. In such a reaction the deposited excitation energy is too small for the nuclei to undergo fission at a reasonable rate. However, evidence is found for the presence of reactions where more than four nucleons are transferred, but the cross section is very low.[1]

We notice that only a few fragment-fragment coincidences are observed for $\psi > 90$ deg. These events can be explained as coming from the spread due to neutron evaporation after a single-nucleon transfer. This implies that no transfer reactions are observed in which the stripped ion is emitted with higher forward momentum than the incoming ion.

Another important result that comes out of the correlation measurements is the ratio between the cross sections for the CF and ICF reactions. By integrating the two peaks, we obtain the ratio of the differential fission cross sections at 90 deg in the lab system, since D-2 is in that position. Attempts to determine the angular distribution of the fragments from the two reactions by measuring the same ratio at extreme forward angles failed because the two peaks move together as $\psi_2$ approaches 0 deg (or 180 deg). However, one can argue that the two groups have similar distributions.[12] The CF reactions involve ions with the lowest impact parameters and deposit high excitation energy in the fissioning nucleus. The ICF reactions take place from the higher $\ell$ -waves and deposit less excitation energy. However, the stripped ion takes off large amounts of orbital angular momentum. The ratios therefore represent the ratios between the total fission cross sections at 10.4 MeV/nucleon. And because of the high fissionability with $U^{238}$ as the target, they are also the ratios between the CF and the ICF reactions.

The total interaction cross sections for these systems have been measured.[11] The corresponding cross sections $\sigma_{CF}$ and $\sigma_{ICF}$ for the CF and the ICF reactions, respectively, together with the total cross section $\sigma_R$ are given in Table I.

### C. Results at Lower Bombarding Energies

We observe that $\bar{\psi}_{ICF}$ approaches $\bar{\psi}_{CF}$ with decreasing bombarding energy. One interpretation of this effect is that the stripped ion is emitted at increasingly higher angles, since lower $\ell$-waves are involved. Therefore the functions become difficult to analyze. Qualitatively, however, we can state that the ICF cross sections decrease when the ion energy decreases.

## V. COMPARISON WITH OTHER EXPERIMENTS

The ICF reactions discussed above do not proceed according to the tunneling mechanism,[13] which is characterized as a distant collision in which the Coulomb barrier is not penetrated. In such reactions, a single nucleon usually transfers and the trajectory of the ion is not affected by short-range nuclear forces. This process should also lead to fission with $U^{238}$ as the target. A momentum analysis shows that the peak of the correlation function for such reactions is 3 deg higher than the observed values for $\psi_{ICF}$. In addition, the cross section for tunneling reactions is one order of magnitude lower than that found for $\sigma_{ICF}$. Our method is not sensitive enough to detect reactions of such low relative yield and with a correlation

peak within 3 deg of the ICF peak.

Wolfgang and coworkers[10,14] have studied reactions between heavy ions and lighter targets by use of excitation functions and range measurements. They find that most heavy products are formed through a compound nucleus which incorporates all of the projectile. They also observe a large fraction of products with several nucleons removed from the projectile. They conclude that the projectile residues have been deflected forward of the Rutherford cutoff angle by a nuclear interaction. Kaufman and Wolfgang[10] found these results to be consistent with the so-called grazing model. Crude calculations on the grazing mechanism indicate that it can occur in high yield. At the highest bombarding energies, cross sections of the order of hundreds of millibarns were expected for the target residues of grazing reactions.

These features strongly suggest that the ICF reactions we have observed in the correlation functions are in fact proceeding according to the grazing mechanism. This also shows that, to a first approximation, there are no apparent differences in the interactions between heavy ions and heavy and lighter targets.

The deduction that few-nucleon transfer is the most dominant in the ICF reactions is supported by the fact that, with lighter targets such as Au and Ho, only the CF reaction is observed. Ordinarily, transfer of four nucleons does not deposit enough excitation energy in the target nucleus for it to undergo fission. In addition, spallation studies of reactions between heavy ions and the heaviest elements indicate that the transfer of one alpha particle is more frequent than two or more.[9] As a consequence, most of the direct interaction alphas (and protons) observed in heavy-ion reactions come from the breakup of the stripped ion.[15,16]

The apparent tendency for the transfer of an alpha particle in the grazing reactions is possibly connected with an alpha-particle structure in the ions.

In conclusion, we have shown that this method is useful in analyzing momentum transfer in nuclear reactions which lead to fission. It can separate and analyze reactions with relatively large differences in forward momentum. For fission induced by high-energy particles, it might be a useful tool in untangling the complex spectrum of reactions that take place. In addition, by using this method, we can determine the number and energy of neutron emitted in CF reactions.

## ACKNOWLEDGMENTS

We are indebted to Mr. Albert Ghiorso for his interest and support. Messers Robert M. Latimer and Walter F. Stockton prepared the silicon detectors and Mr. Charles A. Corum designed the fission chamber and detector mounts. We are grateful to Messers William W. Goldsworthy and Bruce Wilkins for their help with the electronics. We also thank the Hilac crew for excellent beam during many hours of running time. Finally, we acknowledge the help of Mrs. Roberta B. Garrett in processing the data.

## FOOTNOTES AND REFERENCES

*This work was done under the auspices of the U.S. Atomic Energy Commission.

1. T. Sikkeland, E. L. Haines, and V. E. Viola Jr., Phys. Rev. 125, 1350 (1962).
2. T. Sikkeland and V. E. Viola Jr., presented at International Symposium on Direct Interactions and Nuclear Reaction Mechanism, Padua, Sept. 3-8, 1962.
3. W. J. Nicholson and I. Halpern, Phys. Rev. 116, 195 (1959).
4. V. E. Viola Jr. and T. Sikkeland, Lawrence Radiation Laboratory Report UCRL-10284, Oct. 1962, to be published in Phys. Rev.
5. A. G. W. Cameron, Atomic Energy of Canada Limited Report CRP-690, 1957 (unpublished).
6. H. R. Bowman, J. C. D. Milton, S. G. Thompson, and W. J. Swiatecki, Lawrence Radiation Laboratory Report UCRL-10139, May 20, 1962 (unpublished).
7. R. L. Bramblett and F. W. Bonner, Nuclear Physics 20, 395 (1962).
8. J. R. Huizenga, R. Chaudry, and R. Vandenbosch, Phys. Rev. 126, 210 (1962).
9. A. Ghiorso and T. Sikkeland, in Proceedings of the Second International Conference on the Peaceful Uses of Atomic Energy, Geneva, 1958 (United Nations, New York, 1958) Vol. 14, p. 158.
10. R. Kaufman and R. Wolfgang, Phys. Rev. 121, 206 (1961).
11. V. E. Viola, Jr., and T. Sikkeland, Phys. Rev. 128, 767 (1962).
12. T. Sikkeland, A. E. Larsh, and G. E. Gordon, Phys. Rev. 123, 2112 (1961).
13. G. Breit and M. E. Ebel, Phys. Rev. 103, 679 (1956).
14. J. B. J. Read, I. M. Landenbauer-Bellis, and R. Wolfgang, Phys. Rev. 127, 1722 (1962).
15. W. J. Knox, A. R. Quinton, and C. Anderson, Phys. Rev. 120, 2120 (1960).
16. H. C. Britt and A. R. Quinton, Phys. Rev. 124, 877 (1961).

## FIGURE CAPTIONS

Figure 1. Contour diagram of the angular correlation function $W(\xi,\psi)$ for coincident pairs of fission fragments in the $O^{16}$ bombardment of $U^{238}$. The angles are defined in Fig. 2.

Figure 2. Angular relations in momentum space for a binary-fission event. Symbols are defined in the text.

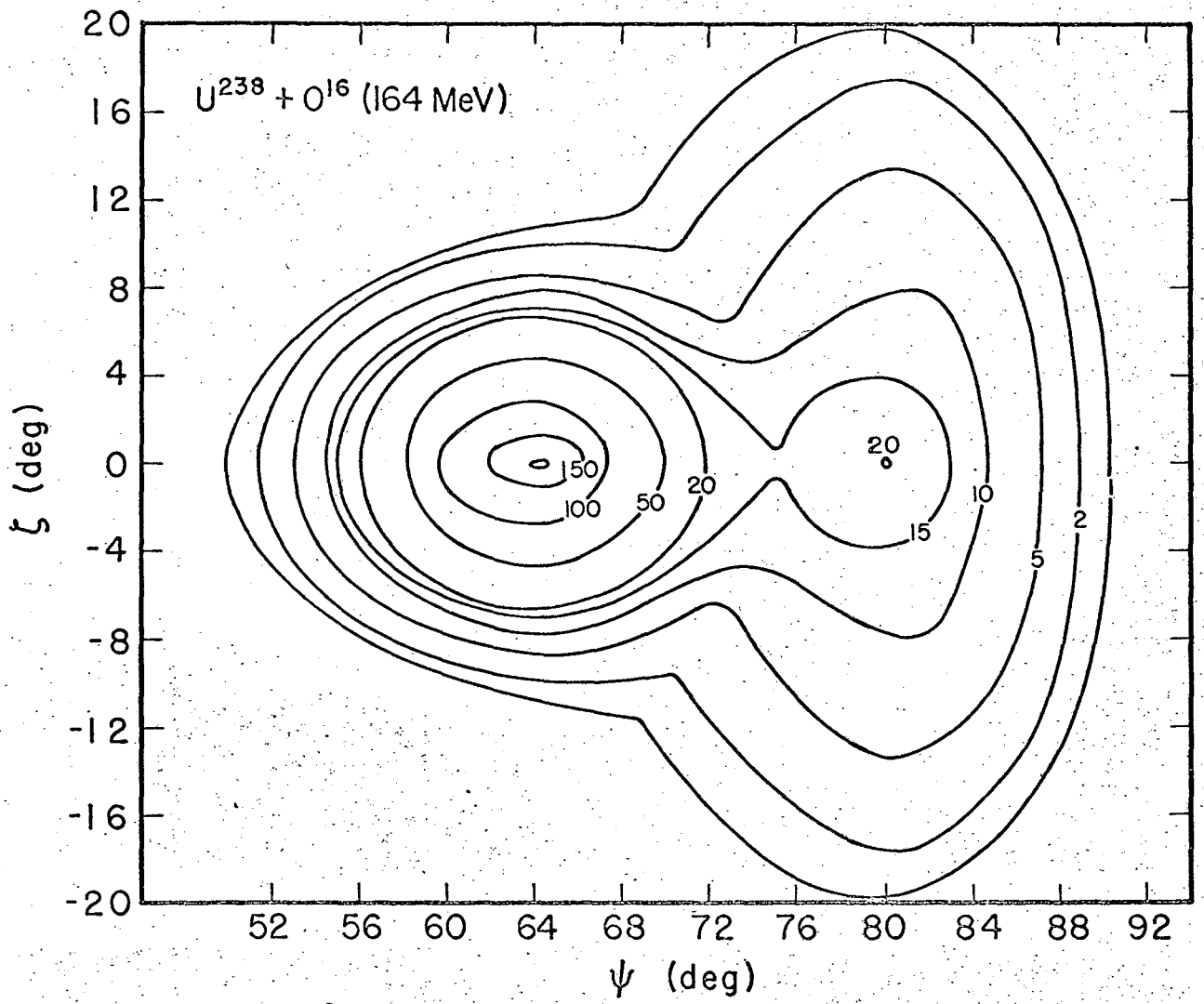


fig 1

MUB-1141

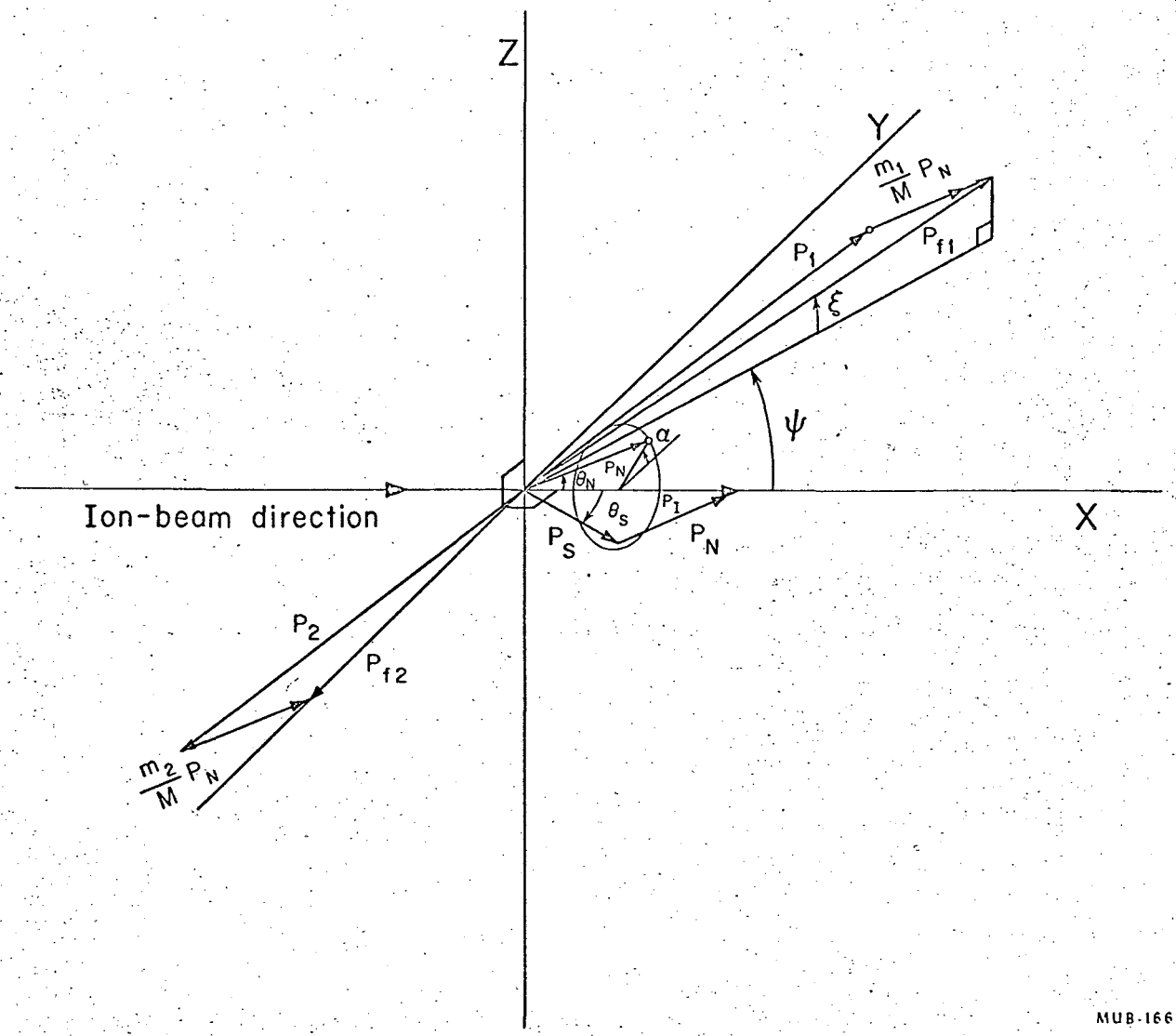
Z
Y
X
Ion-beam direction
$\frac{m_1}{M} P_N$
$P_1$
$P_{f1}$
$\xi$
$\psi$
$\alpha$
$P_N$
$\theta_N$
$\theta_S$
$P_1$
$P_S$
$P_N$
$P_2$
$P_{f2}$
$\frac{m_2}{M} P_N$
MUB-1668

Fig 2