UCRL-10784

University of California

Ernest O. Lawrence Radiation Laboratory

ELECTRONIC VARIABLE DELAY FOR TRACING CHARACTERISTIC CURVES OF COINCIDENCE CIRCUITS AND TIME-TO-HEIGHT CONVERTERS

TWO-WEEK LOAN COPY

This is a Library Circulating Copy which may be borrowed for two weeks. For a personal retention copy, call Tech. Info. Division, Ext. 5545

Berkeley, California

DISCLAIMER

This document was prepared as an account of work sponsored by the United States Government. While this document is believed to contain correct information, neither the United States Government nor any agency thereof, nor the Regents of the University of California, nor any of their employees, makes any warranty, express or implied, or assumes any legal responsibility for the accuracy, completeness, or usefulness of any information, apparatus, product, or process disclosed, or represents that its use would not infringe privately owned rights. Reference herein to any specific commercial product, process, or service by its trade name, trademark, manufacturer, or otherwise, does not necessarily constitute or imply its endorsement, recommendation, or favoring by the United States Government or any agency thereof, or the Regents of the University of California. The views and opinions of authors expressed herein do not necessarily state or reflect those of the United States Government or any agency thereof or the Regents of the University of California.

Submitted to Review of Scientific Instruments

UCRL-10784

UNIVERSITY OF CALIFORNIA
Lawrence Radiation Laboratory
Berkeley, California

Contract No. W-7405-eng-48

ELECTRONIC VARIABLE DELAY FOR TRACING CHARACTERISTIC CURVES OF COINCIDENCE CIRCUITS AND TIME-TO-HEIGHT CONVERTERS

Meir Birk, Quentin A. Kerns, and Thomas A. Nunamaker

April 19, 1963

Electronic Variable Delay for Tracing Characteristic Curves of Coincidence Circuits and Time-To-Height Converters*

Meir Birk,† Quentin A. Kerns, and Thomas A. Nunamaker

Lawrence Radiation Laboratory
University of California
Berkeley, California

April 19, 1963

A common procedure for obtaining the time-resolution curve of a coincidence circuit, or the amplitude-time relationship of a time-to-height converter, is to measure a number of points by using cables of different lengths and then to plot a smooth curve through these points. However, in order to make sure that the true curve does not contain any irregularities or wiggles, the number of points to be measured may become so large as to render this method awkwardly time-consuming. A simple method which utilizes an electronic delay circuit for a continuous display of such characteristic curves is hereby described. This method is similar to that described by de Waard.[1,2] However, instead of using a pulse pair generator, we control the time delay between an incoming pulse and an output pulse which it generates. The present circuit can therefore be operated by random pulses, such as those produced by radiation detectors. It is also capable of operating at much higher repetition rates.

Figure 1 is a block diagram of a setup for displaying the resolution curve of a coincidence circuit on the screen of an oscilloscope. The delay provided by the delay circuit is a linear function of the modulation voltage. The sweeping voltage does not have to be linear in time, since both the delay and the horizontal position of the beam on the screen are linearly controlled by the same waveform. The oscilloscope can be replaced by an X-Y recorder in conjunction with a slow sweep generator. The described arrangement will also work when the two input

pulses originate from two radiation detectors. It is obvious that the time constant of the rate meter and the sweeping speed of the scope, or recorder, have to be properly chosen.

Figure 2 shows a similar arrangement for testing a time-to-height converter. In this case, an X-Y recorder is used.

The circuit diagram of the delay unit is shown in Fig. 3. A positive input pulse, amplified by Q1, will trigger TD1, if the pulse exceeds the discrimination level set by P1 (20 to 120 mV). Tunnel diode TD1 operates the TD2 univibrator circuit which produces a 70 nsec pulse which, via Q2, saturates Q3. Transistor Q3 is therefore an electronic switch, which when closed applies approximately 6.8 V across L3, thus starting through L3 a current ramp which mainly passes through TD3. The moment of triggering TD3 linearly depends on its initial current, which is a linear function of the instantaneous value of the modulation voltage applied through S1. In the quiescent state, or after triggering, when the driving current through L3 drops below a certain level, TD3 cannot be in its high voltage state because Q4 would saturate, force TD3 into the low state and cut itself off. The output of TD3 is differentiated and applied to Q6, which provides a positive output pulse which has, approximately, an amplitude of 150 mV when feeding a 125 Ω load, a rise time of 2.5 nsec, and a fall time of 10 nsec.

The minimum delay of the circuit is 30 nsec. Potentiometer P2 can be set for a further delay of up to 10 nsec and an additional delay of up to 25 nsec is obtained with the modulation voltage. We scanned the full variable delay range in steps of 1650 psec, and scanned the first 1650 psec (where circuit ringing could still be present) in steps of 165 psec. We found no deviations from linearity greater than the experimental error of ±15 psec. Using pulses of 2.5 nsec rise time at twice triggering level, we found the time jitter (FWHM)‡

to be less than 30 psec and the drift over a period of several hours less than ±25 psec. Using pulses of 1 nsec rise time of 1 V amplitude, the temperature coefficient in the range of 25° C to 35° C was measured to be 30 psec/°C. Using similar pulses ranging in amplitude from 1 to 8 V, a difference in delay of less than 80 psec was observed for pulses differing in amplitude by a factor of two. Varying the -18 V supply from -15 V to -21 V gave a change in delay of approximately 170 psec/V. The delay circuit operates at repetition rates of up to 3×10^6 pulses/sec.

Figure 4 shows the resolution curve of a coincidence circuit displayed on a scope. An external resistor was put in series with the 42.4 K resistor at the modulation input in order to expand the time scale, which ordinarily is 2.5 nsec/cm.

Figure 5 shows part of the response curve of a time-to-height converter, as traced by an X-Y recorder. Comparing the two curves, one can see that the wiggles repeat along horizontal lines, namely they occur at certain pulse heights coming from the converter; i.e., at certain relative delays between "start" and "stop" pulses. Had these wiggles originated in our delay circuit, they should have appeared at given delays of the "stop" pulse irrespective of the time of arrival of the "start" pulse, namely they should have repeated along vertical lines. Since no irregularity in the curve can be seen to be repeated along a vertical line, one may conclude that wiggles, if any, occurring in the delay circuit are negligible on a nsec scale.

It should be mentioned that in an actual physical experiment, such as a time-of-flight experiment, it is the derivative of the response curve of the converter that counts, so that even small wiggles may give rise to considerable peaks and valleys in the results displayed by the pulse height analyzer used in conjunction with the converter.

Finally we should like to mention that we have also experimented with nonlinear transmission lines, utilizing varactor diodes as the nonlinear element. The delay of such lines can be electrically controlled.[3,4] These lines seemed to be applicable to cases where small time variations had to be controlled. They did not, however, seem appropriate for the present purpose, mainly due to their narrow variable delay range and to the nonlinear relation between the delay and the applied modulation voltage.

Footnotes and References

* This work was done under the auspices of the U. S. Atomic Energy Commission.

† On leave from the Weizmann Institute of Science, Rehovoth, Israel.

‡ By FWHM is meant the width at half max of the pulse time distribution curve.

1. H. de Waard, Rev. Sci. Instr. 20 (1949) 911.
2. H. de Waard and H. Beekhuis, Proceedings of the 1961 Gatlinburg Conference on Electromagnetic Lifetimes and Properties of Nuclear States, Publication 974, National Academy of Sciences-National Research Council, Washington, D. C., (1962) 71.
3. R. Landauer, IBM Journal 4 (1960) 391.
4. R. B. Riley, 1961 International Solid-State Circuits Conference, Lewis Winner, New York 36, N. Y., (1961) 10.

Figure Captions

Fig. 1. Block diagram of arrangement for coincidence-curve tracing.

Fig. 2. Block diagram of setup for plotting the height-versus-time curve of a time-to-height converter.

Fig. 3. Circuit diagram of delay unit. All resistors are 1/4 W 5% unless otherwise specified.

Fig. 4. Resolution curve of a coincidence circuit, tested with pulses from a pulse generator, displayed on a scope. The time separation between the two identical curves is 1 nsec.

Fig. 5. Part of the response curve of a time-to-height converter plotted by an X-Y recorder. The two identical curves were separated by 1 nsec from each other by changing the "start" cable.

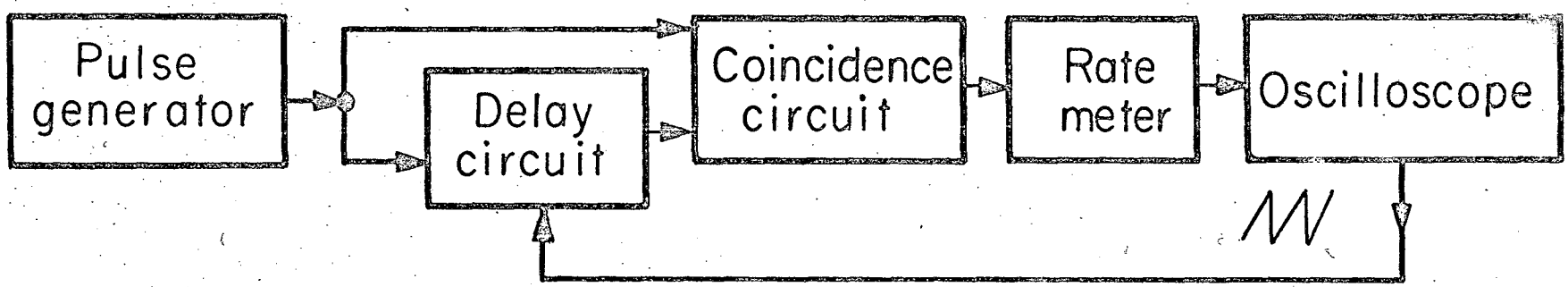

MU-30363

Fig. 1

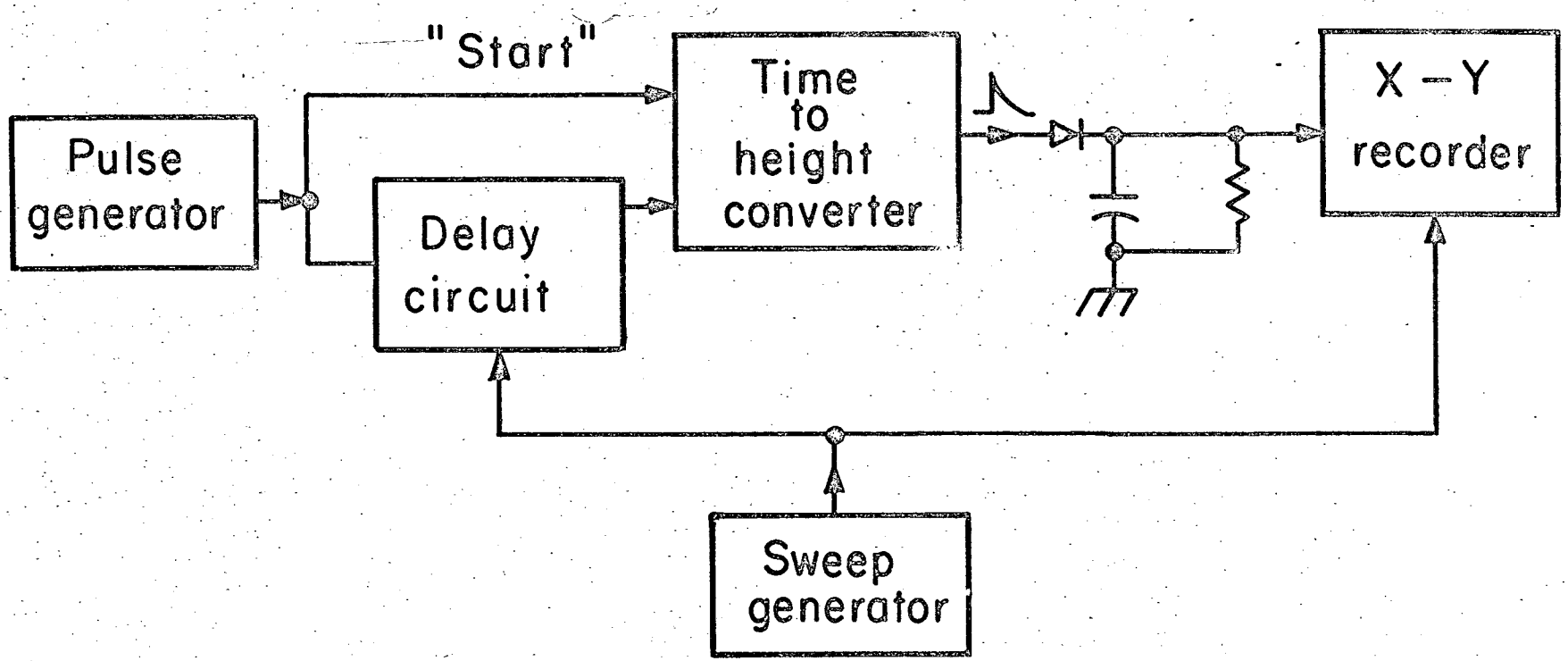

MU-30364

Fig. 2

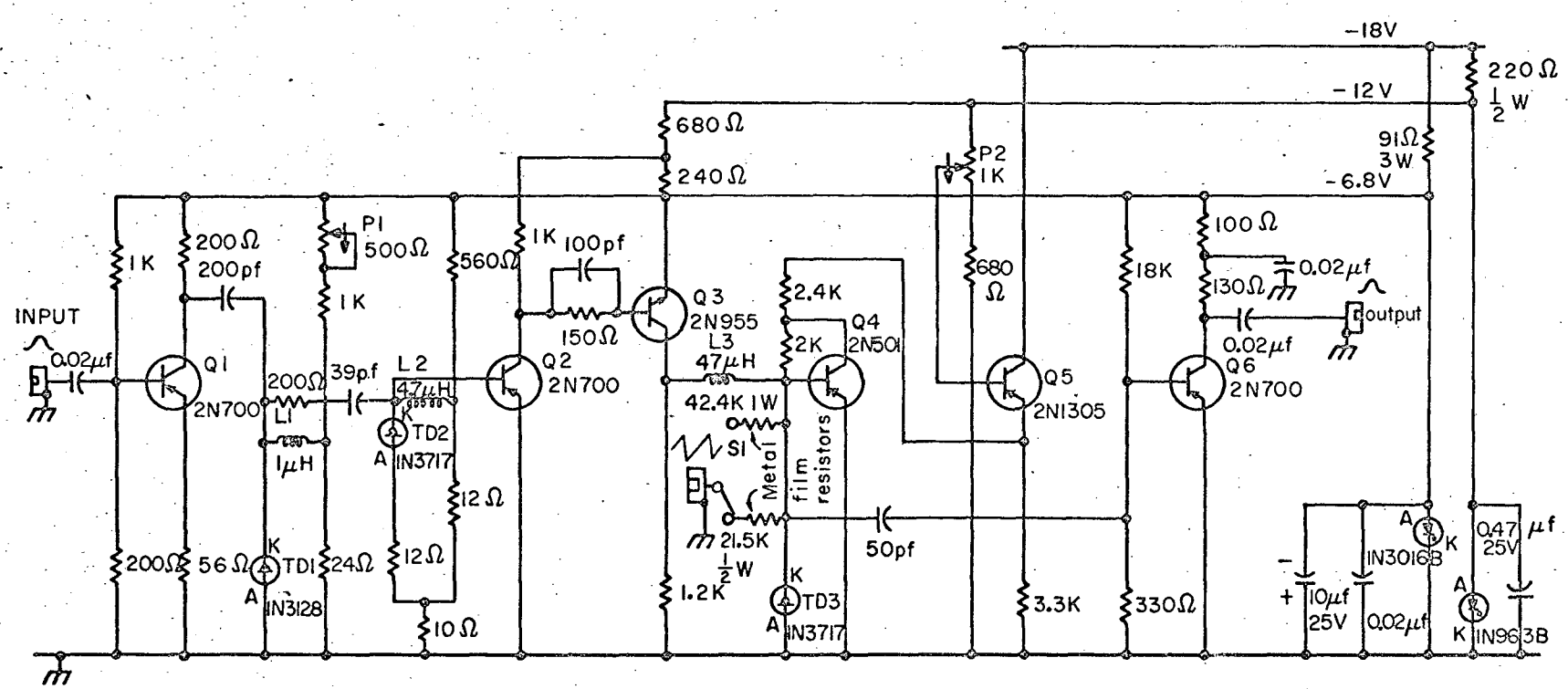

MU-30365

Fig. 3

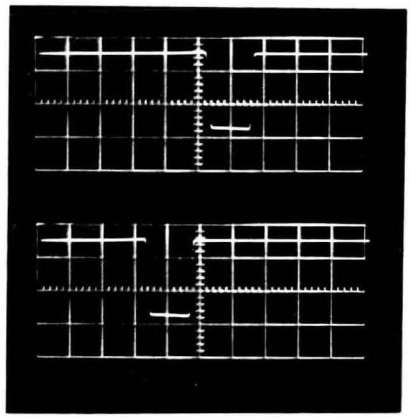

Fig. 4

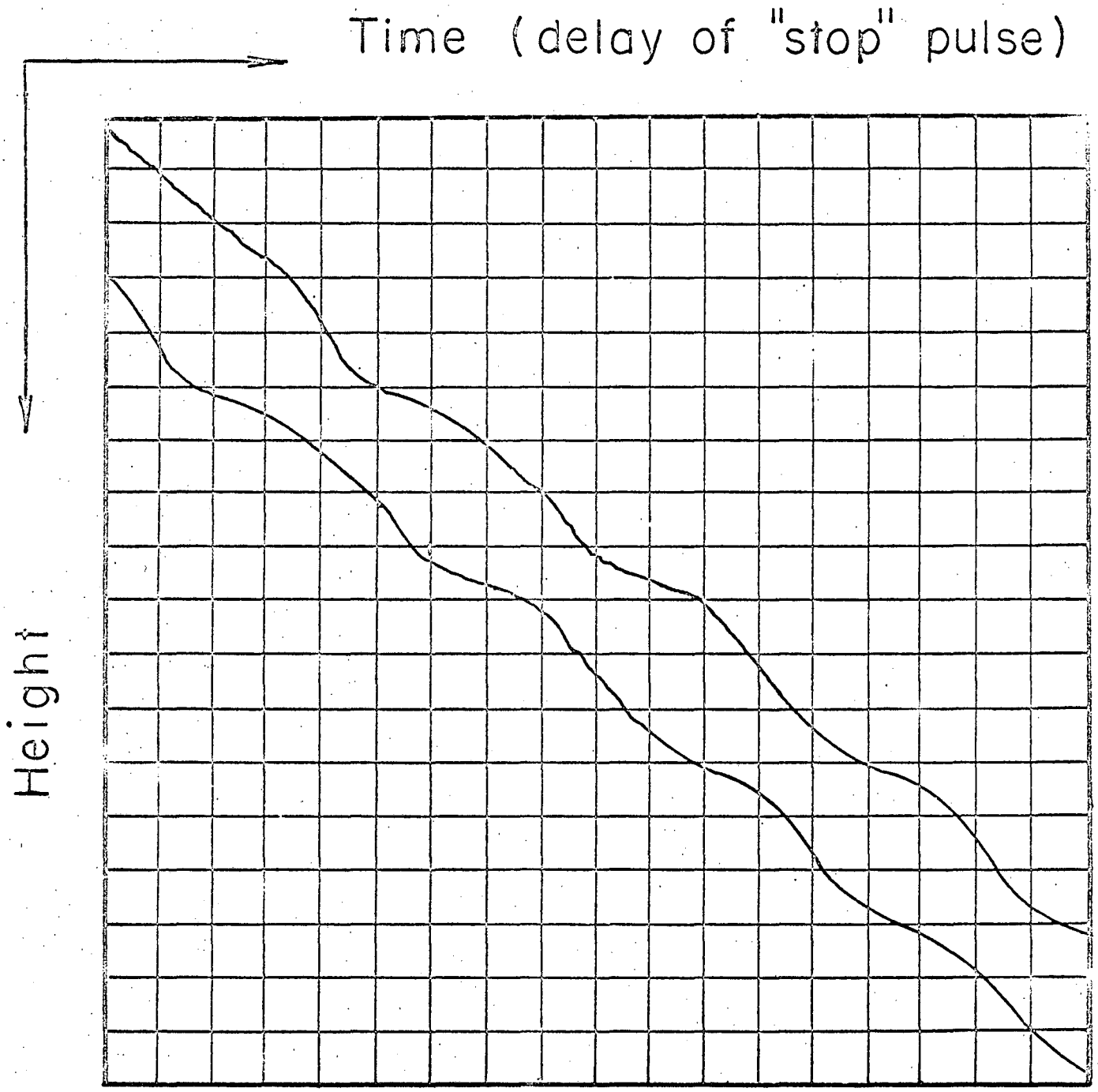

Fig. 5