UCRL-10874

University of California
Ernest O. Lawrence Radiation Laboratory

TWO-WEEK LOAN COPY

This is a Library Circulating Copy
which may be borrowed for two weeks.
For a personal retention copy, call
Tech. Info. Division, Ext. 5545

A MULTIPARAMETER PULSE-HEIGHT RECORDING SYSTEM

Berkeley, California

DISCLAIMER

This document was prepared as an account of work sponsored by the United States Government. While this document is believed to contain correct information, neither the United States Government nor any agency thereof, nor the Regents of the University of California, nor any of their employees, makes any warranty, express or implied, or assumes any legal responsibility for the accuracy, completeness, or usefulness of any information, apparatus, product, or process disclosed, or represents that its use would not infringe privately owned rights. Reference herein to any specific commercial product, process, or service by its trade name, trademark, manufacturer, or otherwise, does not necessarily constitute or imply its endorsement, recommendation, or favoring by the United States Government or any agency thereof, or the Regents of the University of California. The views and opinions of authors expressed herein do not necessarily state or reflect those of the United States Government or any agency thereof or the Regents of the University of California.

Conference on Instrument Techniques in Nuclear Pulse Analysis - Naval Post-graduate School - Monterey

UCRL-10874

UNIVERSITY OF CALIFORNIA
Lawrence Radiation Laboratory
Berkeley, California

Contract No. W-7405-eng-48

A MULTIPARAMETER PULSE-HEIGHT RECORDING SYSTEM

Michiyuki Nakamura and George S. Simonof

April 1963

A MULTIPARAMETER PULSE-HEIGHT RECORDING SYSTEM*

Michiyuki Nakamura and George S. Simonof

Lawrence Radiation Laboratory
University of California
Berkeley, California

April 1963

ABSTRACT

A multiparameter pulse-height recording system has been built and in operation for approximately one year. The system has been used principally in studies of nuclear fission.

The system can record up to ten coincident parameters for each nuclear event. We use stretchers to store the pulse amplitudes temporarily, and then serially read the stretchers into an ADC unit. The digitized pulse heights are stored in predetermined locations of a magnetic-core buffer store. The buffer store can handle 512 pulse heights before dumping periodically onto magnetic tape. Each parameter has 256 channels of resolution.

The magnetic tape format is "IBM compatible," with a recording density of 200 characters per inch. It takes 80 msec to dump the buffer store information onto magnetic tape. This 80-msec interval limits the speed at which information can be recorded.

The information on the tape can be read back into the magnetic-core store by selecting one of the parameters and obtaining a "singles" spectrum of that parameter. When we are satisfied that reasonable data have been collected, we take the reel of magnetic tape to an IBM 7090 computer for delayed analysis.

---

* Work done under the auspices of U. S. Atomic Energy Commission.

INTRODUCTION

At this meeting, Dr. Lidofsky has reported on the conference on "Utilization of Multiparameter Analyzers in Nuclear Physics." Some of the subjects of discussion at the conference were real-time totalization versus delayed analysis via stored programs, cost, speed, flexibility, and the number of channels of resolution of various systems. In our system, we have chosen the delayed-analysis approach, using stored programs with our IBM 7090 computer.

SYSTEM CONCEPTS

Figure 1 shows a simplified block diagram of our multiparameter pulse-height recording system. Pulses to be analyzed enter from the left accompanied by a coincidence trigger. The pulses are stored in the temporary pulse-height store, which is made up of capacitor-type stretchers. The droop of these stretchers is approximately 1 channel in 10 msec. The pulse heights are serially digitized and stored in the modified Technical Measurement Corporation (TMC) 256-channel analyzer. As many as 10 parameters per event may be recorded, with 256 channels of resolution for each parameter.

Most of the experiments requiring multiparameter recording have been with fission work requiring four parameters. The digitized pulse heights are stored in the magnetic-core buffer store.

After the buffer-core store has been filled, the information is dumped onto magnetic tape. The tape format is IBM-compatible; it uses the non-return-to-zero (NRZ) method of recording data on tape. The recording-bit density is 200 bits per inch. We check parity while recording the data onto the magnetic tape and indicate parity errors via a red light. The number of parity errors may be counted in a scaler.

The information on the tape can be "stripped" by reading the data back into the buffer-core store in the conventional multichannel analyzer mode. The "singles" spectrum is displayed for each parameter, indicating whether or not reasonable data had been recorded. We do not have the capability, however,

of displaying one parameter while imposing restrictions on any of the other parameters.

A "live" display monitor may be added at a later date. This monitor may be a two-parameter analyzer like the Nuclear Data or TMC types presently available.

The modified TMC 256-channel analyzer can easily be converted back to normal multichannel operation by turning two switches. In the normal mode, the experimental electronics can be readily adjusted for gain by displaying the pulses in the multichannel analyzer. This means that the TMC analyzer is also available for other single-parameter experiments.

SYSTEM DETAILS

A photograph of the multiparameter recording system is shown in Fig. 2. To the left is the Ampex FR-400 magnetic tape transport. It has the quick-start-stop feature which allows us to dump the magnetic-core buffer store periodically. In the center of the photograph is the control logic, housed in a dual rack. We used digital modules (of flip-flops, one-shots, "and" gates, "or" gates, etc.) for performing the logical functions in the control logic. At the top right portion of the dual rack are the stretchers. To the right is the TMC pulse-height analyzer.

Figure 3 is a close-up of the analyzer, indicating some of the modifications made to the front panel of the unit. The two switches labeled "Singles" and "Multi-D" permit the operator to select the normal multichannel analyzer mode in "Singles" or the multiparameter recording mode in "Multi-D". To remind the operator of the proper position for each switch under the multiparameter recording mode, and "MD" tag is placed at each proper setting. At the center of the photograph note the test points, which are useful in maintenance operations. At the top of the photograph, note the switches that can be used for some test routines that are useful in debugging operations.

Figure 4 shows a close-up of the main control panel from which most of the experimental functions may be controlled. Because of the complexity of the system, we felt it imperative that the system be reasonably easy to operate with essentially no operator mistakes. Important switch positions and logic levels for system operation are emphasized by multicolored lamps behind the indicating push buttons on the control panel. For example, a green lamp indicates proper setting of a switch, while a red lamp indicates an improper setting. Lamps behind the "Principal Operator Controls" push buttons light up to "tell" the operator which button to push at the proper time. The push button controls have been adequately interlocked so that operator mistakes are kept to a minimum.

We use interlocking logic to control the format on the magnetic tape so that the computer program easily reads the tapes. Remote control lines are taken from the Ampex tape transport to the control panel. Except for the loading and unloading of reels of magnetic tape, all the tape-transport functions can be controlled at the control panel.

Parity errors can be recognized by a red lamp on the front panel. Parity error signals are available at a connector for scaling if desired. Excessive parity errors usually indicate dirty heads or dirty tapes. The read-write heads of the magnetic tape transport should be cleaned at least once a day. In loading and unloading tape reels, care must be taken so that dust does not get onto the magnetic tape.

SYSTEM PERFORMANCE

The system has been in operation approximately one year and has performed very well and reliably.

The bit drop-out rate has been about one part in 10^7. In a recent experiment, the drop-out rate was about one bit out of 10^9 bits.

The digital modules that we used in the control logic have proved very reliable. With routine maintenance schedules, the Ampex tape transport has been satisfactory. The TMC analyzer has given us very little difficulty.

We believe that the care with which we have tried to "human-engineer" our system has paid big dividends in reducing operator errors. One experimenter, with but a few minutes of instruction, was able to perform a three parameter experiment. His only difficulty in the operation arose when he failed to clean the read-write heads adequately.

FIGURE CAPTIONS

Fig. 1. Simplified block diagram of multiparameter pulse-height recording system.

Fig. 2. Photograph of multiparameter recording system.

Fig. 3. Close-up of Technical Measurement Corporation PHA, showing some front panel modification.

Fig. 4. Close-up of main control panel of multiparameter recording system.

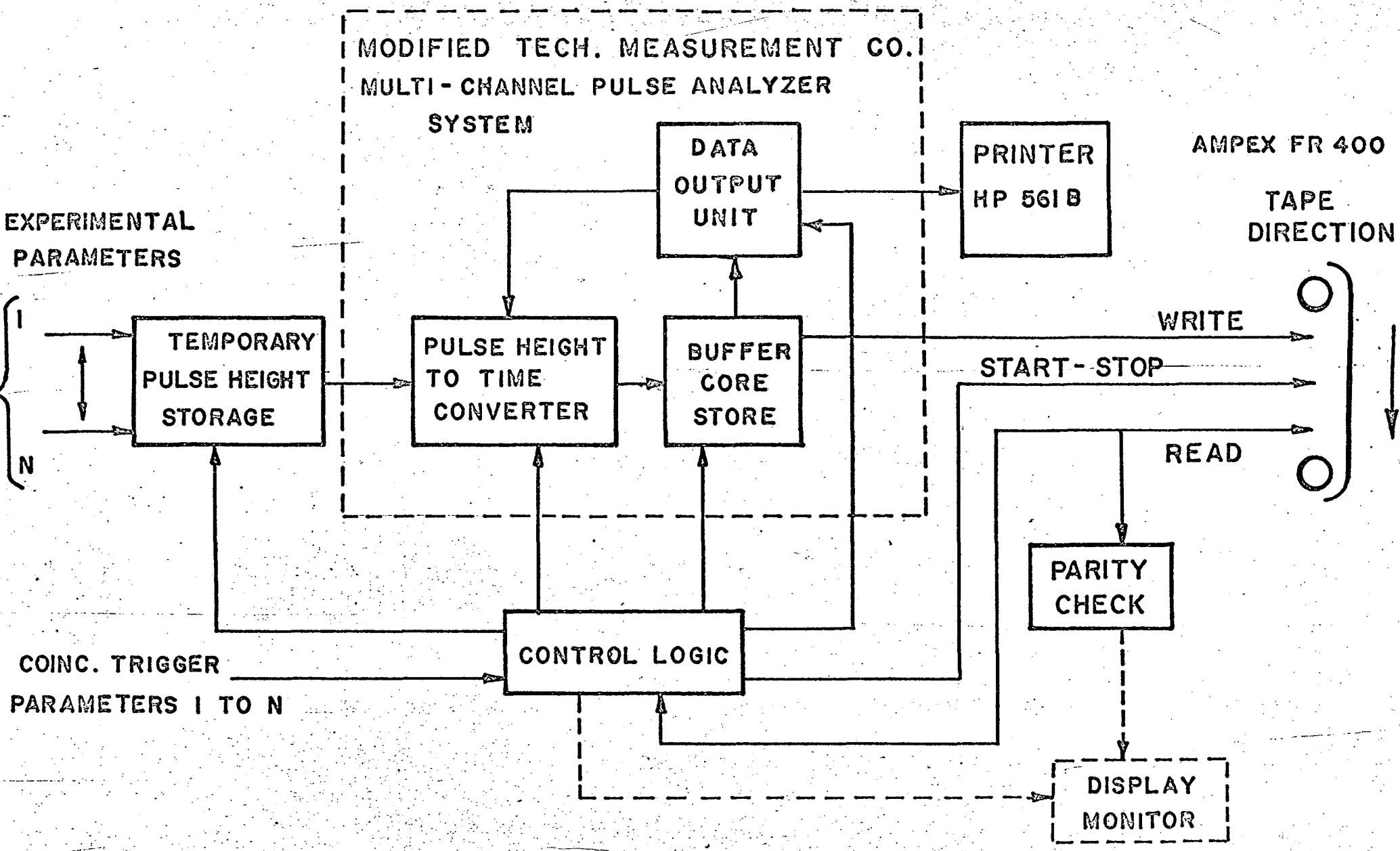
MODIFIED TECH. MEASUREMENT CO.
MULTI-CHANNEL PULSE ANALYZER
SYSTEM
DATA OUTPUT UNIT
PRINTER HP 561 B
AMPEX FR 400
TAPE DIRECTION
EXPERIMENTAL PARAMETERS
I
N
TEMPORARY PULSE HEIGHT STORAGE
PULSE HEIGHT TO TIME CONVERTER
BUFFER CORE STORE
WRITE
START-STOP
READ
PARITY CHECK
CONTROL LOGIC
COINC. TRIGGER
PARAMETERS I TO N
DISPLAY MONITOR

Fig. 1

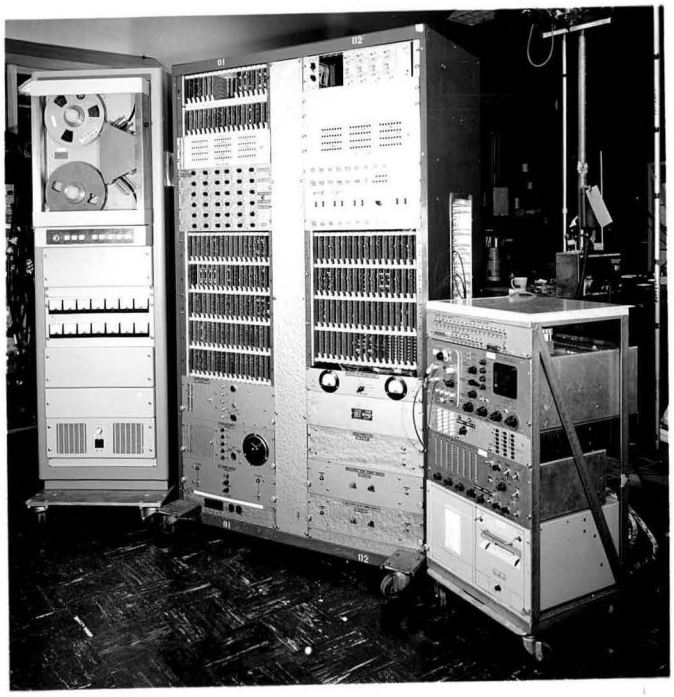

Fig. 2

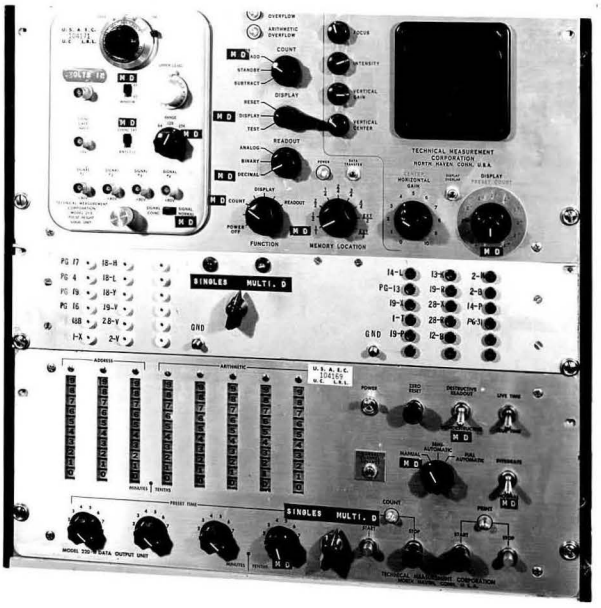
SINGLES MULTI. D
TECHNICAL MEASUREMENT CORPORATION
NORTH HAVEN, CONN. U.S.A.
FUNCTION
MEMORY LOCATION
SINGLES MULTI. D
MODEL 220 DATA OUTPUT UNIT

Fig. 3

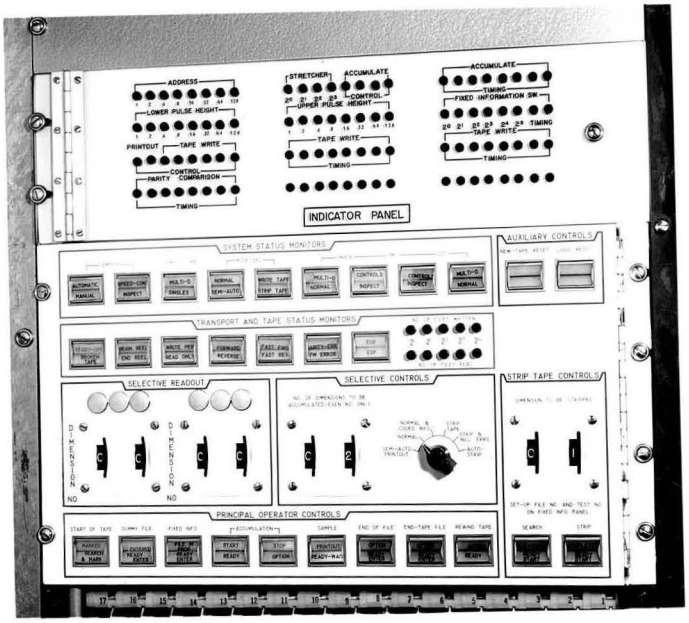

Fig. 4

MILLERS FALLS
EZERASE
COTTON CONTENT