UCRL-11017

University of California

Ernest O. Lawrence Radiation Laboratory

TWO-WEEK LOAN COPY

This is a Library Circulating Copy which may be borrowed for two weeks. For a personal retention copy, call Tech. Info. Division, Ext. 5545

THE INTERNAL FRICTION DUE TO OXYGEN IN SILVER

Berkeley, California

Research and Development

UCRL-11017
UC-25 Metals, Ceramics
and Materials
TID-4500 (19th Ed.)

UNIVERSITY OF CALIFORNIA

Lawrence Radiation Laboratory
Berkeley, California

Contract No. W-7405-eng-48

THE INTERNAL FRICTION DUE TO OXYGEN IN SILVER

John Mesrob Papazian

(M. S. Thesis)

September 1963

Reproduced by the
Technical Information Division
directly from author's copy

DISCLAIMER

This document was prepared as an account of work sponsored by the United States Government. While this document is believed to contain correct information, neither the United States Government nor any agency thereof, nor the Regents of the University of California, nor any of their employees, makes any warranty, express or implied, or assumes any legal responsibility for the accuracy, completeness, or usefulness of any information, apparatus, product, or process disclosed, or represents that its use would not infringe privately owned rights. Reference herein to any specific commercial product, process, or service by its trade name, trademark, manufacturer, or otherwise, does not necessarily constitute or imply its endorsement, recommendation, or favoring by the United States Government or any agency thereof, or the Regents of the University of California. The views and opinions of authors expressed herein do not necessarily state or reflect those of the United States Government or any agency thereof or the Regents of the University of California.

TABLE OF CONTENTS

Abstract ii

I. Introduction 1

II. Experimental Techniques 10

A. Materials 10

B. Specimen Preparation 10

C. The Torsion Pendulum 13

D. Mode of Operation 19

III. Results 20

A. Silver-Magnesium-Oxygen System 20

B. Silver-Oxygen System 20

1. The 270°K Peak 23

2. The 130° and 180°K Peaks 23

3. Deformation-Produced Peaks 26

IV. Discussion 31

A. Silver-Oxygen System 31

1. The 130° and 180°K Peaks 32

2. The 270°K Peak 37

3. Deformation-Produced Peaks 38

B. Silver-Magnesium-Oxygen System 38

1.. Absence of a Relaxation Peak 38

2. Background Damping 39

V. Conclusions 41

Acknowledgements 42

Appendix 43

References 50

Figure Captions 52

ABSTRACT

The presence of oxygen in amounts of the order of 100 ppm in high-purity silver is found to give rise to three low temperature internal friction peaks. Measurements carried out on single crystal wire specimens in a torsion pendulum show that these peaks occur at 130°, 180°, and 270°K at a frequency of about 2 cps. The activation energies associated with these peaks are 8.5 ± 1.0, 11.5 ± 1.0 and 15.5 ± 1.0 kcal/mole respectively. A study has been made of the orientation dependence of the peaks, the variation in the peak heights with oxygen concentration and the response of these peaks to various annealing treatments. It is shown that for both the 130° and the 180° peaks the peak height is proportional to the square of the oxygen concentration over the range from 100 to 300 ppm. For both peaks, the maximum relaxation strength is observed when the crystals are tested in torsion about a ⟨111⟩ axis, while torsion about ⟨100⟩ results in minimum values of the peak heights. On the basis of these observations and others, the 180°K peak has been assigned to the stress-induced reorientation of interstitial oxygen atom pairs whose axes lie along ⟨110⟩ directions. It is proposed that the defect responsible for the 130°K peak consists of a pair of oxygen atoms in a vacant lattice site in the split interstitial configuration. The peak at 270°K is tentatively ascribed to an oxygen-dislocation interaction.

A search has also been made for a relaxation peak in Ag-Mg-O alloys containing up to one atomic percent magnesium. No peaks have been observed in the temperature range from 77° to 290°K. However, the introduction of oxygen into binary Ag-Mg alloys is found to lower the background damping probably due

290°K. However, the introduction of oxygen into binary Ag-Mg alloys is found to lower the background damping, probably due to the effective pinning of dislocations by Mg-O particles or clusters.

I. INTRODUCTION

Since the development of the theory of anelasticity by Zener in 1948[1], measurements of the damping or internal friction have provided a particularly valuable and sensitive tool for studying the internal structure and atomic movements in solids. Many sources of internal friction have been recognized including thermoelastic and magnetic relaxation effects, stress relaxation across grain boundaries and the stress-induced ordering of various atomic or point defect configurations. In recent years increasing effort has been devoted to the application of internal friction techniques to studies of diffusion phenomena, as well as to the study of interactions between defects in metals, and a number of comprehensive reviews dealing with these topics have been published[2,3,4].

Stress-induced ordering has been investigated most thoroughly in body-centered cubic metals containing interstitial solutes such as carbon, nitrogen and oxygen. In face-centered cubic metals, on the other hand, the great bulk of previous work has been carried out on fairly concentrated alloys of the substitutional type and almost no attention has been given to binary systems containing only interstitial solutes or to ternary systems involving both substitutional and interstitial components. The present investigation is concerned with stress-induced ordering in systems of the latter kind, namely, the silver-oxygen system, in which oxygen is believed to be present in interstitial solution, and the silver-magnesium-oxygen system, in which a substitutional solute is also present.

The general requirement which must be fulfilled in order

for a defect to give rise to an internal friction peak is that it produce a distortion which has a lower symmetry than the lattice. In such a case, not all of the positions or orientations available to this defect remain equivalent when the lattice is stressed, and, as a result, a local ordering or reorientation of the defect will be expected. Consider, for example, an interstitial atom in the position $(\frac{1}{2},0,0)$ in a b.c.c. crystal. This atom produces a tetragonal distortion which is greatest in the [100] direction. If now a tensile stress is applied along the [001] direction, the interstitial atom will be able to lower its interaction energy with the lattice by jumping or "relaxing" so that it produces its greatest strain along the [001] direction, i.e., by jumping to the position $(1,0,\frac{1}{2})$. This jump constitutes a diffusion process and hence, at a given temperature, it has a characteristic jump frequency. If, instead of a static atress, the stress is applied periodically at a frequency much lower than the characteristic jump frequency, the interstitial atom will have ample time to reorient and will always jump in phase with the stress. On the other hand, if the stress is applied with a frequency much greater than the jump frequency, the interstitial atom will not have sufficient time to reorient, and hence will not contribute to the strain. It is clear that when the frequency of the applied stress is just equal to the characteristic jump frequency the absorbtion of mechanical energy by the lattice will be a maximum; consequently, a peak in the internal friction will be observed as the frequency is swept through the appropriate range.

The phenomenological theory of the anelastic behavoir of solids was initially developed by Zener. For a "standard linear solid", Zener has shown[1] that the internal friction can be expressed by the relation:

$$\tan \phi = \Delta_E \frac{\omega\tau}{1+(\omega\tau)^2} \qquad (1)$$

where ϕ is the angle by which the strain lags the stress, Δ_E is the relaxation strength or modulus defect, ω is the frequency and τ the relaxation time. Equation (1) yields a symmetrical error curve with a maximum at $\omega\tau=1$ when $\tan\phi$ is plotted as a function of ω.

Since the stress-induced ordering of an atomic species or defect occurs by a thermally activated diffusion process, we expect that the relaxation time τ will be given by a rate expression of the form

$$\tau^{-1} = \tau_0^{-1} \exp\left(-\frac{H}{RT}\right) \qquad (2)$$

where H is the activation energy for diffusion and τ_0^{-1}, the attempt frequency, is given by

$$\tau_0^{-1} = n\nu \exp\left(\frac{S}{R}\right) \qquad (3)$$

in which n is the number of elementary diffusion paths available, ν is the Debye frequency and S is the entropy of activation for the jump. Because of the strong temperature dependence of τ, a peak in the damping is observed at some characteristic temperature when the internal friction is measured as a function of temperature at a constant frequency.

The poorest approximation in the preeceding description is that the relaxation time has only a single fixed value corresponding

to a uniquely activated process. Assuming Eq. (2) to be valid and substituting into Eq. (1) it is seen that the peak width, W, at half maximum should be

$$W = \left(\frac{1}{T_1} - \frac{1}{T_2} \right) = \frac{5.28}{H} \quad . \tag{4}$$

Actual peaks observed in b.c.c. and f.c.c. metals are usually somewhat broader, although peaks with exactly the theoretical width have been observed in hexagonal close-packed structures. Nowick and Berry have attempted to determine whether the spread in relaxation times is due to variations in the attempt frequency τ_0^{-1} or in the activation energy H.[5] Their results indicate that both quantities may be variable. To better desctibe the situation Caswell[6] has employed a Gaussian distribution in τ while Nowick and Berry[7] use a Guassian distribution in log τ.

The measurement of the activation energy associated with the atomic relaxation process is best accomplished by determining the position of the peak maximum at several different frequenxies. From the criterion that $\omega\tau = 1$ at the peak maximum together with Eq. (2) we obtain

$$\ln\left(\frac{f_2}{f_1} \right) = \frac{H}{R}\left(\frac{1}{T_1} - \frac{1}{T_2} \right) \quad . \tag{5}$$

where f_2 and f_1 are the measuring frequencies and T_2 and T_1 are the temperatures of the respective maxima. Hence a plot of ln f vs. 1/T should yield a straight line whose slope is H/R. Lacking a broad enough experimental frequency range, the activation energy may be determined by the method of Wert and Marx.[8] Taking logarithims of both sides of Eq. (2), rearranging and applying the criterion that $\omega\tau = 1$ at the peak maximum yields

$$H = \left(R \ln \frac{n\nu}{2\pi f} + S \right) T \quad . \tag{6}$$

By plotting all of the available data for 1 cps Wert and Marx have shown empirically that the coefficient of T is a constant and is equal to approximately 65 cal/mole/^{o}K. Thus a reasonable estimate of the activation energy can be obtained simply by noting the temperature at which the peak occurs.

Previous Work on F.C.C. Metals

As mentioned above, the symmetry of the distortion produced by an impurity or defect must be lower than the symmetry of the lattice in order for it to give rise to an internal friction peak. In face-centered cubic crystals, therefore, only configurations which involve at least two or more atoms or point defects can contribute. The relaxation effect which has been most thoroughly investigated in f.c.c. systems is the Zener peak, which has been observed in a number of relatively concentrated (at least 5 at.%) binary substitutional solid solutions and is thought to be due to the stress-induced reorientation of substitutional atom pairs. Other peaks have been reported in f.c.c. systems which appear to be caused by the ordering of interstitial-substitutional atom pairs; mention may be made, for example, of the internal friction peak observed by Ke and Wang in an 18% Mn austenitic steel with carbon as the interstitial solute.[9]. Ke et. al. have also observed a peak in 99.8% pure nickel containing carbon in interstitial solution,[10] which they attribute to carbon-vacancy pairs. However, their evidence is not conclusive and it might be suspected that this peak involves either a carbon-carbon of a substitutional impurity-carbon relaxation.

A peak due to a split interstitial in cold drawn nickel has been reported by Seeger, Schiller and Kronmuller.[11] Their claims are corroborated by magnetic after effect measurements but disputed by Berry who was unable to reproduce the peak.[4] This peak is of interest since it indicates that the split interstitial configuration, rather than the classical cubic interstitial at $(\frac{1}{2},0,0)$, may be the most stable form of the interstitial in cold worked f.c.c. metals.

Other relatively simple types of point defect aggregates which could, at least in principle, give rise to internal friction peaks in f.c.c. metals, but which have not been observed, include interstitial inpurity atom pairs and divacancies. Considerable effort has been expended in the search for a divacancy peak in quenched f.c.c. metals without much success.[4] However, the presence of a non-equilibrium concentration of vacancies leads to some interesting effects in substitutional alloys. For example, the quenching-in of excess vacancies had been shown to result in a decrease in the average relaxation time for stress-induced ordering in such systems as Ag-Zn and Al-Mg.[12,13] Under equilibrium conditions the time of relaxation is controlled by the vacancy concentration, which is fixed by the temperature of measurement. However, in the presence of a supersaturation of vacancies, the time between successive arrivals of a vacancy at the relaxation center is less than the equilibrium value and, consequently, the relaxation time is lowered. Nowick and Sladek have found that the decrease in the initial relaxation time is directly proportional to the vacancy supersaturation.[12] As the quenched-in vacancies are annihilated at sinks,

however, the relaxation time gradually increases toward the equilibrium value. Thus, Nilsen has observed that, upon quenching an Al-5% Mg alloy, a peak initially appears at about 50°C which is quite unstable and rapidly migrates upward in temperature until it coincides with the stable Zener peak at 150°C.[13] Berry has conjectured that this system should show still another stable Zener peak at a much lower temperature.[4]. His reasoning is that since Mg atoms an Al-Mg are known to trap vacancies, a peak should develop which is due to the relaxation of Mg atoms associated with a vacancy. In contrast to the migrating peak observed by Nilsen, this peak should occur at a fixed temperature since the solute atom-vacancy complex will itself have a fixed, characteristic, relaxation time which is independent of the vacancy concentration.

Objectives of this Investigation

The present investigation was designed as a search for a stress-induced relaxation in the ternary system silver-magnesium-oxygen. This system is of interest for several reasons. It involves both a substitutional (magnesium) as well as an interstitial (oxygen) solute and hence seems to offer a good oppurtunity for studying substitutional-interstitial interactions in a f.c.c. matrix, about which little is known. Because of the strong chemical affinifty of magnesium for oxygen it was felt that the probability of forming significant concentrations of Mg-O pairs would be quite high, even in very dilute alloys. If so a relaxation should be observed, and the temperature at which the peak occurs should correspond to the relaxation time for the jump of an oxygen atom from one interstitial

position to an adjacent interstitial site surrounding the magnesium atom. From recent data on the diffusion coefficient of oxygen in silver[14] it was estimated that such a peak, if present, would occur at about 180°K.

When the preliminary experiments a temperatures between 77°and 290°K failed to reveal any evidence for the existence of this peak, the emphasis was shifted to a study of binary silver-oxygen alloys. In order that the internal friction peaks observed in this system could be confidently ascribed to oxygen alone and not to interstitial-substitutional interactions it was necessary that the silver used be of exceptionally high purity. In the material actually employed the total concentration of substitutional impurities was approximately two orders of magnitude less than the amount of oxygen which could be introduced into the silver by saturating at elevated temperatures. To avoid possible complications due to grain boundary relacations, single crystal specimens were employed throughout. Having observed a relaxation peak, the use of single crystals also made it possible to investigate the orientation dependence of the peak heights; such information is of value in helping to identify the relaxation mechanisms.

Previous work on the internal friction of silver has been carried out by Pearson and Rotherham,[15] Koester,[16] and Nowick.[17] In each case, the measurements were made at temperatures above room temperature and were concerned primarily with grain boundary relaxation phenomena. It has been shown that the presence of oxygen surpresses the grain boundary relaxation peak in silver.

In their search for a divacancy peak Hasiguti et. al.[18] have observed three low temperature (173°, 200° and 245°K at 1 kc/sec) peaks in 99.99% silver cold rolled at room temperature. These peaks all disappeared upon ageing for one day at room temperature. It has been suggested that these peaks are due to interactions between deformation produced point defects (i.e. vacancies, interstitials, etc.) and dislocations.[19] The Bordoni peak in silver has been the subject of several investigations, see, for example, the work of Okuda.[20]

II. EXPERIMENTAL TECHNIQUES

A. Materials

The starting material consisted of ultra-high purity (99.9999%) silver containing less than 1 ppm oxygen and a vacuum melted Ag-1 at.% Mg master alloy prepared from this same grade of silver.* Two other more dilute alloys (0.1 and 0.5 at.% Mg) were obtained by induction melting appropriate quantites of there materials under vacuum (10^{-6} mm Hg) in thoroughly outgassed high purity (less than 10 ppm total impurites) graphite crucibles.+

B. Specimen Preparation

All specimens used in this investigation were in the form of 1/16" diameter single crystal wires of selected orientations, which were grown in vacuum (10^{-6} mm Hg.) in high purity graphite crucibles by a modified Bridgman technique. The materials were first vacuum cast into rods about 1/8" diameter and 5" long in a graphite mold. These rods were drawn to 1/16" diameter and then etched in dilute HNO_3 to remove any surface contamination. The polycrystalline wires were them inserted into a previously outgassed graphite crucible along with a seed crystal of the desired orientation, and crystals were grown in vacuum by passing a molten zone vertically through the charge at a rate of about 10"/hour. Seed crystals were prepared in a similar manner from a suitablly oriented spherical seed crystal. Two single crystal wires approximately 8" long were grown simultaneously. Orientations were determined

---

* Both supplied by Consolidated Mining and Smelting Co. of Canada, Ltd.

\+ Supplied by United Carbon Products Co., Bay City, Michigan

by the standard Laue back reflection technique; the resulting crystals were found to by of good perfection.

To determine whether or not any serious contamination occured during the fabrication and crystal growing proceedures, the residual resistivity ratio was measures on specimens before and after melting.* For the as-recieved silver $\rho_{290°K}/\rho_{4.2°K} \cong 4000$, which is consistent with the stated purity of the material. Melting in vacuum in high purity graphite reduced this ratio to about 2000. The residual resistivity ratio for a sample of known 99.999% purity was approximately 500. It is concluded therefore, that the melting and crystal growing operations introduced at most only a few ppm total impurities.

The alloy single crystal wires were homogenized for approximately three days at 900°C in the same graphite crucible in which they were grown. Homogenization was carried out in a fused quartz container which had been evacuated and filled with research grade argon. After homogenization, the quartz container was withdrawn from the furnace and allowed to cool in air.

Controlled amounts of oxygen were introduced into the silver crystals by equilibrating the specimens in a known partial pressure of oxygen at elevated temperatures. The resistance furnace employed for this purpose could be regulated to give a hot zone about 12" long in which the temperature was uniform to ± 3°C. The specimens were suspended vertically within this zone and the furnace temperature was controlled to ±1°C. To saturated the silver specimens, a static oxygen atmosphere was maintained within the furnace, the oxygen

* We are indebted to M.W. Guinan for carrying out these measurements.

pressure being read on a mercury manometer. Twenty four hours were allowed for equilibration,* after which the specimen was quickly withdrawn from the furnace and allowed to cool in air. It was estimated that the crystal cooled to room temperature in about 15 seconds. This proceedure was adopted in order to minimize possible composition changes caused by the rapid diffusion of oxygen out of the specimen durring cooling, as well as to retain the oxygen in supersaturated solution.

The amount of oxygen introduced at any given temperature and pressure of oxygen was calculated from the experimental solubility relationship given by Eichenauer and Muller,[14] namely

$$\log \ell = 1.403 - \frac{2593}{T} + \frac{1}{2} \log p \qquad (7)$$

where ℓ is the solubility in cm^3 O_2 (S.T.P.)/ 100 gm Ag, T the absolute temperature and p the partial pressure of oxygen in mm Hg. No analytical determinations of the oxygen content of the specimens were made.

The silver-magnesium alloys were oxidized in a similar manner except in a flowing oxygen atmospgere at 1 atm. pressure. All specimens were oxidized at 600°C. According to Meijering and Druyvesteyn,[21] the time required for complete internal oxidation can be calculated from the relation

$$t = \frac{c_2 x^2}{2 c_1 D_1} \qquad (8)$$

where x is the distance from the free surface to the center of the specimen in cm, c_1 is the equilibrium concentration of oxygen in the matrix at the surface of the specimen, c_2 the solute concentration,

* This time is far in excess of that required for equilibrium based in data for the diffusion of oxygen in silver.[14]

and D_1 the diffusion coefficient of oxygen. With $x = 0.08$ cm, $c_1 = 7.2 \times 10^{-5}$, $c_2 = 0.01$ and $D_1 = 5 \times 10^{-5}$ cm^2/sec, $t \cong 2$ hours. The actual time allowed for oxidation was 48 hours.

C. The Torsion Pendulum

Measurements of the internal friction and the dynamic elastic modulus were carried out in the range from 77° to 290°K using an inverted torsion pendulum similar to that described by Wert.[22] A schematic drawing of the aparatus is shown in Fig. 1. The available frequency range was from 0.5 to 3 cps and the lowest decrement measured was 3.5×10^{-5}; this may represent the background damping of the apparatus. The unit was housed inside a bell jar which could be evacuated to less than 10^{-5} mm Hg. The decrement was measured by observing the rate of decay of the vibrational amplitude of the specimen in free oscillation. Torsional oscillations were initiated by discharging a capacitor through two electromagnets which were symmetrically placed with respect to the iron end pieces of the inertia member. In this manner short, reproducible pulses were obtained. Measurements were made on warming up from 77°K to room temperature.

Detection of the oscillations was accomplished by shining a light beam onto a cylindrically ground mirror mounted on the inertia member. The mirror focused the beam to a line, which was observed at the end of a twenty four foot long oprical path. The decrement and modulus were measured in two ways:

(a) A stopwatch was used to time the decay of the amplitude of the oscillations on a ruled scale; the decrement

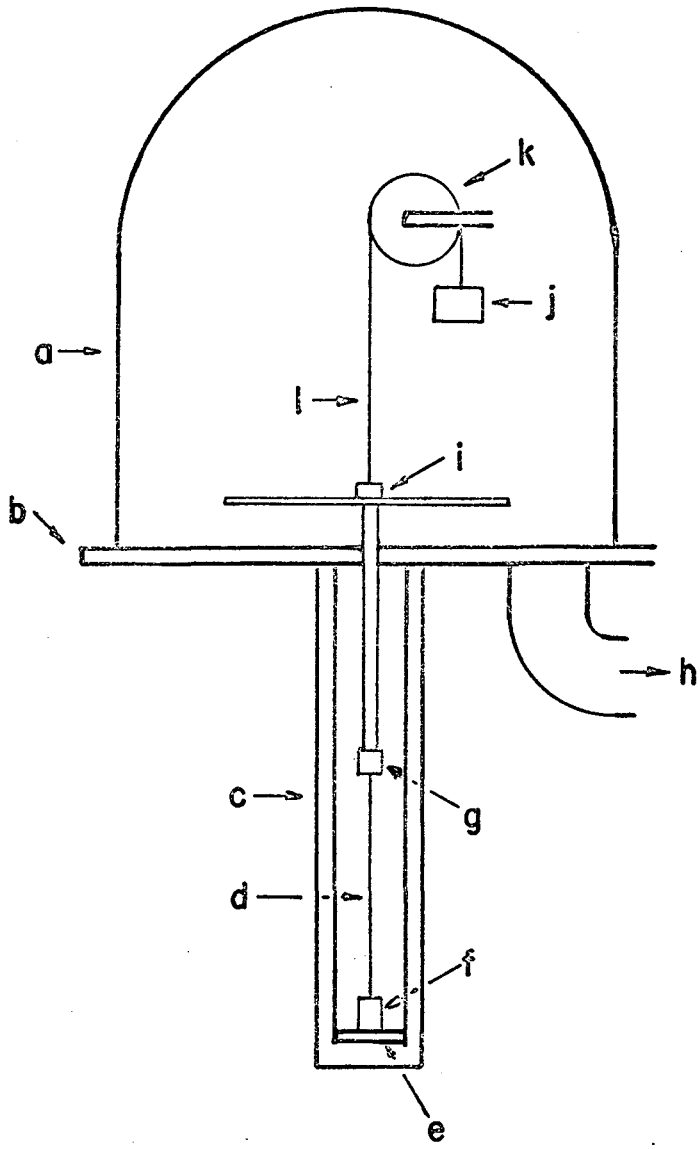

FIGURE 1

was then calculated from the relation

$$\delta = \frac{1}{n} \log_e \left(\frac{A_o}{A_n} \right) \tag{9}$$

where A_o is the initial amplitude and A_n the amplitude after n cycles. According to Petarra,[23] the minimum relative error in δ will be obtained when $n = 1.28/\delta$. Thus the optimum value of n is about 12,000 when $\delta = 10^{-4}$. However, the number of swings which could be counted without introducing too large an uncertainty in the temperature was limited by the warmup rate of the specimen; the maximum time employed in making a measurement was about ten minutes ($n \cong 1200$), during which time the specimen temperature increases by abput 6° or 7°. Long counting times were therefore used only in regions where the decrement was fairly constant. It was estimated that the maximum uncertainty in the measured decrement is $\pm 0.2 \times 10^{-4}$ at $\delta = 10^{-4}$.

The modulus was determined by measuring the frequency of vibration. One hundred cycles were timed with a stopwatch that could be read to 0.02 seconds. The period could therefore be measured to $\pm$ 0.0002 seconds, i.e. to about 4 parts in 10^4 for a period of 0.5 seconds.

(b) The second method utilized a system of coupled photocells, the outputs of which were fed into appropriate counting circuits. Three cells were mounted on a common base; in order to facilitate correct positioning with respect to the light beam the base was mounted in a track, so that it could be shifted relative to the beam by means of a micrometer head. The individual photocells were positioned as illustrated in Fig. 2. The mode of operation was

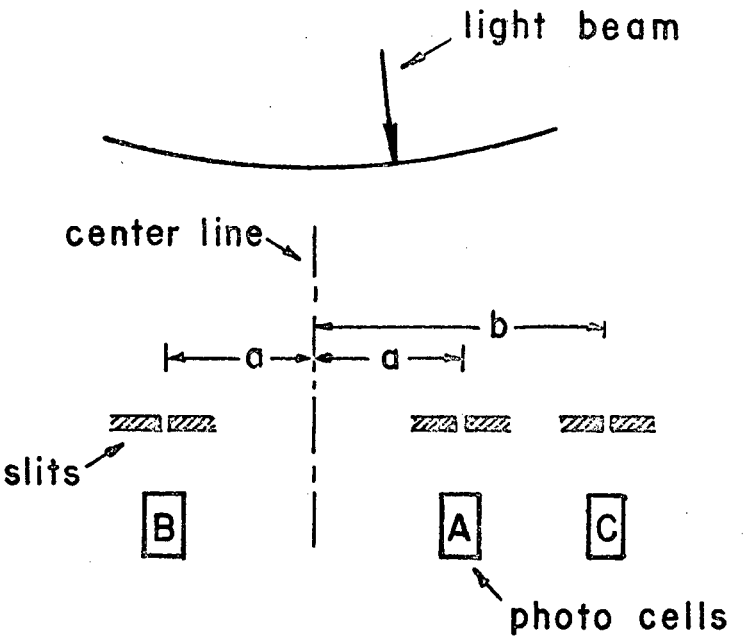

FIGURE 2

as follows: To center the light beam, cells A and B were connected to the counting circuits. Everytime the light beam traversed the slit of one of the photocells a count was registered. The photocell assembly was then shifted to the left or right until both cells simultaneously failed to register counts as the vibrational amplitude decreased to a value less than dimension "a". Cell A was now disconnected from the counting circuit and C connected. The decrement was then measured by allowing the amplitude of the swing (initially greater than dimension "b") to decay below "a", and observing the difference in the number of counts registered by cells C and B. Under these conditions the decrement is given by

$$\delta = \frac{2\ell}{n_C - n_A} \qquad (10)$$

where n_c is the number of counts registered by cell C, $\ell = \log_e(b/a)$ and the factor of 2 arises because two counts are registered for each complete vibrational cycle. Decrements measured in this manner agreed closely with those measured by the conventional technique and the values were reproducable to within 5%.

The frequency was measured by an electronic time interval meter with a ten micro-second time base. The timer was triggered by a pulse from the counter each time the light beam crossed the slit of cell C. When the amplitude of vibration had decayed to the point where C registered only one count per cycle, the time interval between counts was recorded and taken as the period. Unfortunately, the triggering of the timer was not precise at this extremity of the swing and hence the accuracy was limited to about ±0.002 seconds/cycle for a period of about 0.5 seconds. This can be improved by mounting

a photocell near the center of the swing and timing the interval between every alternate count.

Specimens 7" in length and 1/16" in diameter were employed. They were mounted in the aparatus in split bushing grips. Since the single crystal wires were extremely soft, care was necessary during mounting in order to prevent excessive deformation. A simple jig was designed to support the specimen without introducing any bending moments while it was being tightened in the grips.

The specimen temperature was measured by means of a copper-constantan thermocouple which was fastened to the specimen at the lower grip. Dummy runs with thermocouples attached at various points along the specimen indicated that the temperature gradient along the wire was less than 3°K.

Provision was made for annealing the specimens in situ by direct resistance heating. For this purpose, one current lead was attached to the stationary lower grip; the other current lead was adjustable, and was designed so that it could be operated remotely through a Wilson seal. This lead could be brought into electrical contact with the inertia member so as to allow the specimen to expand freely as it was heated. This method was satisfactory for anneals up to 300°C; at higher temperatures end losses produced too large a thermal gradient in the specimen. The pressure in the apparatus was maintained below 10^{-5} mm Hg during anneals. For higher temperature anneals, the specimen was removed from the aparatus and suspended in an Inconel tube furnace in which the pressure was maintained below 10^{-6} mm Hg.

A simple straining mechanism was constructed which could be operated from outside the system through a Wilson seal; this made it possible to strain the specimen in tension while at liquid nitrogen temperatures and then measure the damping on subsequent warmup to room temperature.

D. Mode of Operation

Since some handling deformation was unavoidable, each specimen was allowed to recover overnight at room temperature after installation. The specimen was then cooled to 77°K by placing a dewar of liguid nitrogen around the vacuum jacket and admitting purified helium as an exchange gas in the vacuum chamber. When equilibrium was reached, the helium was pumped out and measurments were made continuously on warming up to room temperature as the liguid nitrogen boiled out of the dewar. The pressure inside the system was kept below 10^{-5} mm Hg during measurements. A complete run took approximately five hours, which corresponded to an average warmup rate of 40°K per hour. The decrement could be measured at approximately two degree intervals when the photocell detection system was employed ($\delta \geqslant 10^{-3}$), or every three degrees when the scale was used ($\delta \leqslant 10^{-3}$). The strain amplitude at the surface of the specimen was about 10^{-5}

III. RESULTS

A. Silver-Magnesium-Oxygen Alloys

In the search for a relaxation peak due to magnesium-oxygen pairs in internally oxidized alloys, one crystal containing 0.1 at.% Mg and four containing 1.0 at.% Mg were investigated; three different orientations were employed, namely, ⟨100⟩, ⟨110⟩ and ⟨111⟩. From a Wert and Marx plot, we predict that an Mg-O pair peak should occur at about 180°K if it exists. No such peak was observed in any of the crystals studied in the temperature range from 77° to 290°K. The results obtained with a ⟨110⟩ oriented crystal of the 1% alloy are representative and are reproduced in Fig. 3. Measurements were first made in the as-grown crystal; the measurements were then repeated after oxidation for 48 hours at 600°C in 1 atm. of oxygen and again after annealing for 48 hours at 800°C at a pressure of less than 10^{-6} mm Hg. It was observed that, in specimens which exhibited a high background damping prior to oxidation, internal oxidation reduced the background by as much as two orders of magnitude; in fact, the lowest value of the internal friction that we observed ($\delta = 3.5 \times 10^{-5}$) was in the ⟨111⟩ specimen after it had been internally oxidized.

B. Silver-Oxygen System

When high-purity silver was saturated with oxygen, three damping peaks were observed, one at 130°K another at 180°K and the third at about 270°K, all at a frequency of 2 cps. The internal friction of a specimen containing approximately 250 ppm of oxygen is shown in Fig. 4. The two lower temperature peaks are well defined and are only slightly broader than would be expected for a single

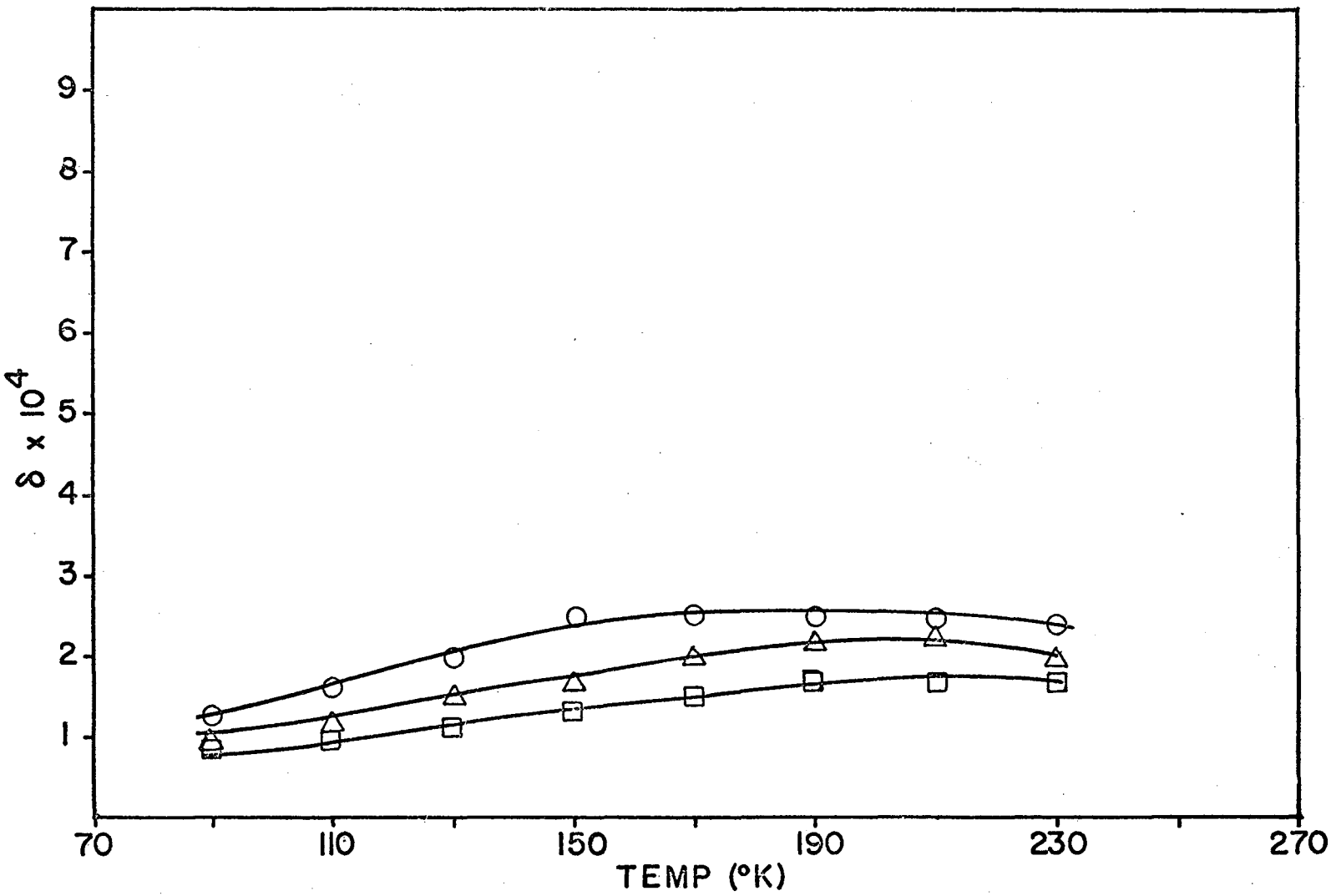

FIGURE 3

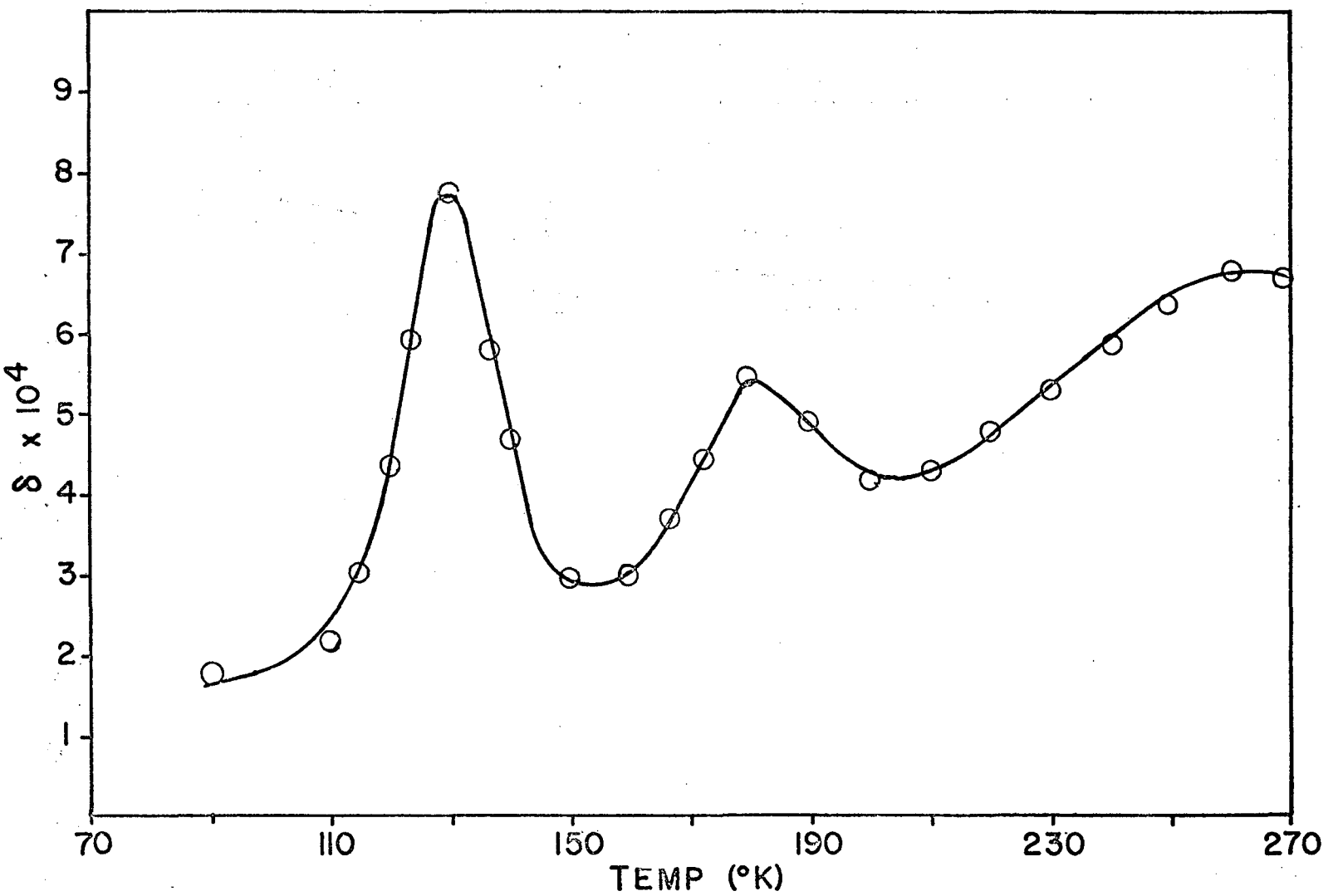

FIGURE 4

relaxation process, while the 270°K peak is quite broad and has a poorly defined maximum. The activation energies of these three peaks as deduced from a Wert and Marx plot are 8.5± 1.0, 11.5± 1.0 and 15.5 ±1.0 kcal/mole respectively. Attempts to deduce the activation energies from the shift in the temperature of the peak with frequency failed because of the small temperature change (about 4°K) when the frequency was varied within the limits set by the apparatus.

1. The 270°K Peak

The characteristics of this peak were not investigated in any detail. However, this peak was generally present in freshly saturated specimens and increased in height after 12 hour anneals at 100° and 200°C. Both the peak height and the peak temperature were quite variable. The peak disappeared when the oxygen was removed by a high vacuum anneal at 400°C. It was suspected that this peak might be due to an oxygen-dislocation interaction. To check this hypothesis the simple test employed by Rawlings and Robinson[24] was used. An oxygen saturated specimen which showed the 270°K peak was strained approximately 3% in tension at 77°K so as to disturb the oxygen-dislocation equlibrium. The specimen was then aged, first at room temperature and then at 100°C, to see if the migration of the oxygen atoms to dislocations would cause the peak to reappear. The peak was somewhat less pronounced after deformation and tended to grow on ageing. This indicates that an oxygen-dislocation interaction may be involved, although the results were far from conclusive.

2. The 130° and 180°K Peaks

Most of our attention was focused on these peaks. They

were found to be highly reproducible, always occuring at 130° and 180°K at 2 cps. They were never observed in oxygen-free silver but were present in every specimen which contained oxygen. They could be removed by vacuum annealing at 400°C and reappeared when the crystals were resaturated. The activation energies of the peaks are 8.5 ± 1.0 and 11.5 ± 1.0 kcal/mole respectively. The average peak widths at half maximum, when plotted vs. 1000/T, are 1.17 for the 130° peak and 0.76 for the 180° peak; thus, the two peaks are, respectively, 1.9 and 1.6 times as broad as would be expected for a single relaxation time process.

a. Annealing and Ageing Response The peaks were always present after oxygen saturation and could not be eliminated by successive 36 hour vacuum anneals at 100° or 200°C. No changes were observed in the peak temperature or heighton ageing in this temperature range. Both peaks disappeared after annealing for 12 hours at 400°C in a vacuum of 10^{-6} mm Hg.

b. Orientation Dependence The orientation dependence of the peak heights for specimens saturated at 800°C in 1 atm. of oxygen, and containing about 250 ppm oxygen, is given in Table 1. The individual values showed considerable scatter, but the trend is toward a maximum in the relaxation strength for torsion about ⟨111⟩ for both peaks.

c. Dependence on Oxygen Concentration The manner in which the peak heights varied with oxygen concentration was investigated by saturating a ⟨111⟩ crystal at different oxygen pressures at a constant temperature (800°C). The range of oxygen concentration

TABLE I

Orientation	100	110	111
130°K peak	2.0	2.9	4.5
180°K peak	0.5	0.9	1.9

The average peak heights of six pure silver specimens (two of each orientation), all saturated at 800°C in 1 atm. of O_2. The numerical values are given as $\delta_{MAX} \times 10^4$.

covered was from about 100 to 300 ppm. A good square law dependence of the peak height on the oxygen concentration was observed for both peaks, as shown in Fig. 5.

d. Dependence on Saturation Temperature When a ⟨100⟩ crystal was saturated at different temperatures between 800° and 900°C at a constant oxygen pressure of 1 atm., a slope of about 2.8 was obtained for the 130°K peak when the peak height was plotted as a function of oxygen concentration on a log-log scale as in Fig. 6. For reasons which are not understood, the corresponding data for the 180°K peak were badly scattered and hence the dependence on saturating temperature could not be determined. In these experiments, the amount of oxygen introduced into the silver crystal increased as the saturating temperature was raised. To avoid this complication another crystal was saturated at different temperatures while holding the oxygen concentration constant at about 200 ppm. This was done by adjusting the partial pressure of oxygen at each temperature in accordance with the solubility data of Eichenauer and Muller (see Eq. 7). Unfortunately, the results again showed considerable scatter and no conclusions could be drawn.

3. Deformation Produced Damping Peaks

The internal friction of an oxygen-free silver crystal was measured after straining 2% at room temperature. Peaks were found at 144°, 153° and 204°K at 1.8 cps, as illustrated in Fig. 7. These peaks were quite sharp and did not have the characteristic shape of relaxation peaks. The peak at 153°K disappeared on ageing for two days at room temperature (see Fig. 7), while the others

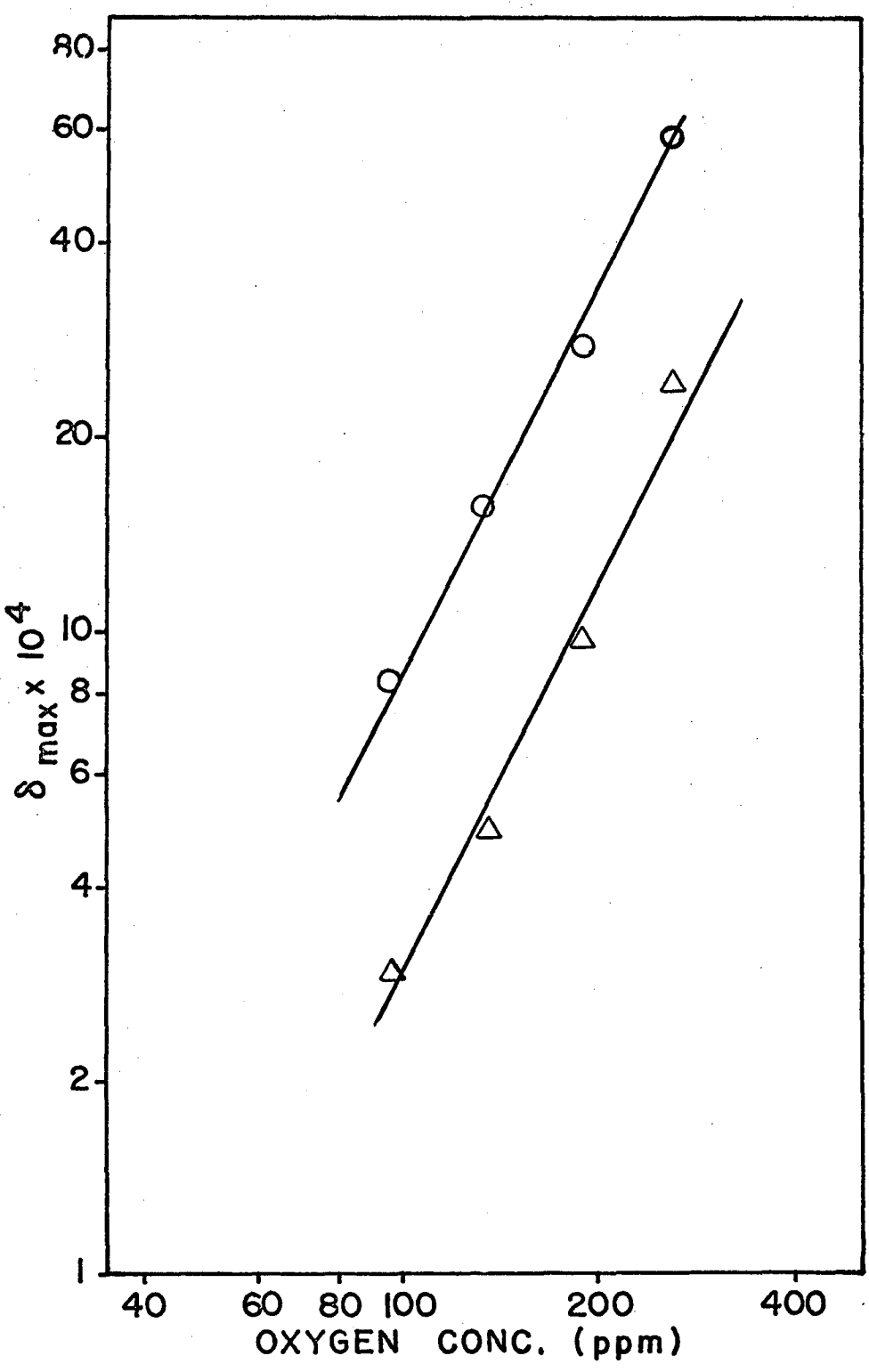
80
60
40
20
10
8
6
4
2
1
$\delta_{max} \times 10^4$
40
60
80
100
200
400
OXYGEN CONC. (ppm)

FIGURE 5

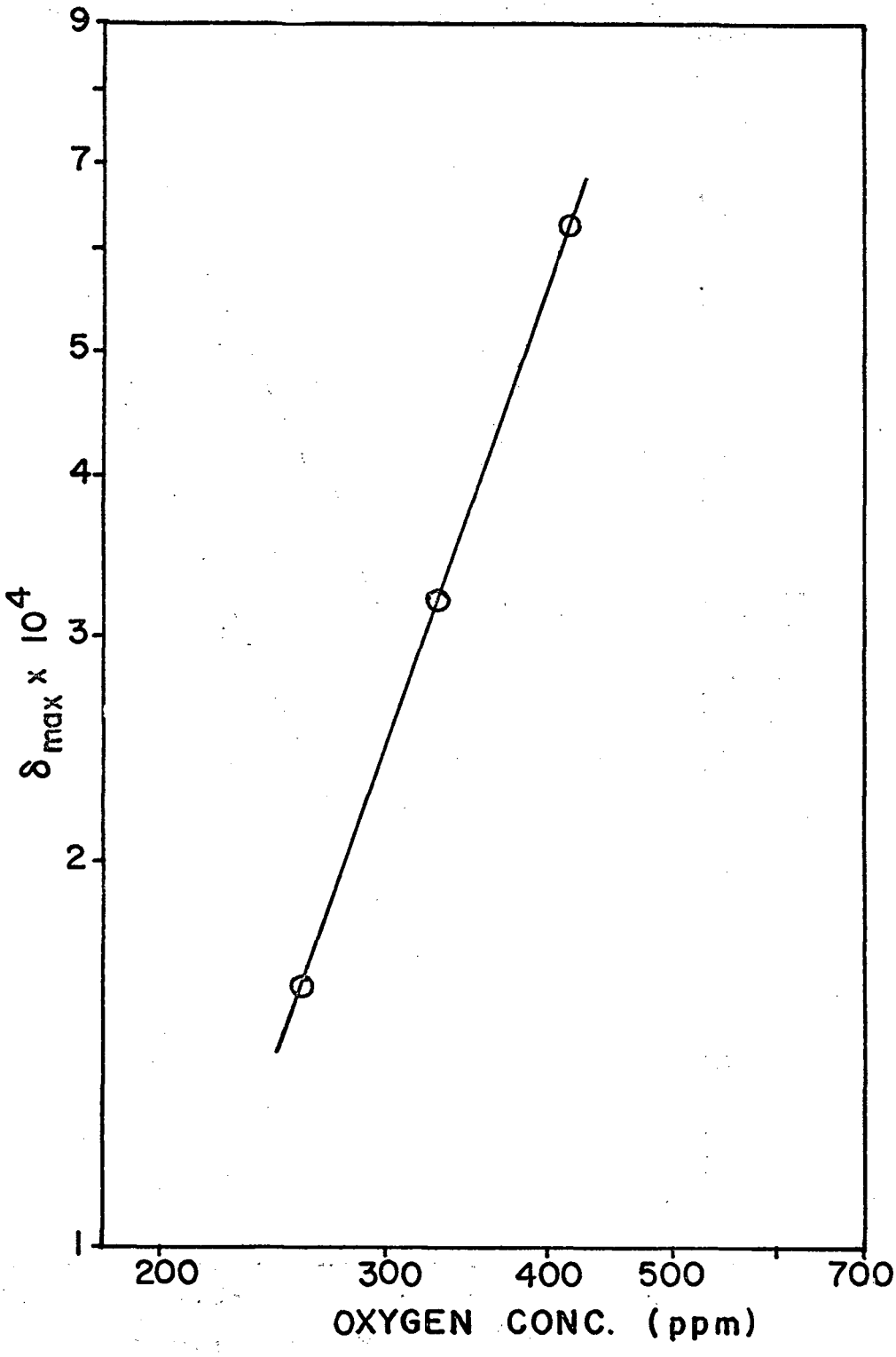
9
7
5
4
3
2
1
$\delta_{max} \times 10^4$
200
300
400
500
700
OXYGEN CONC. (ppm)

FIGURE 6

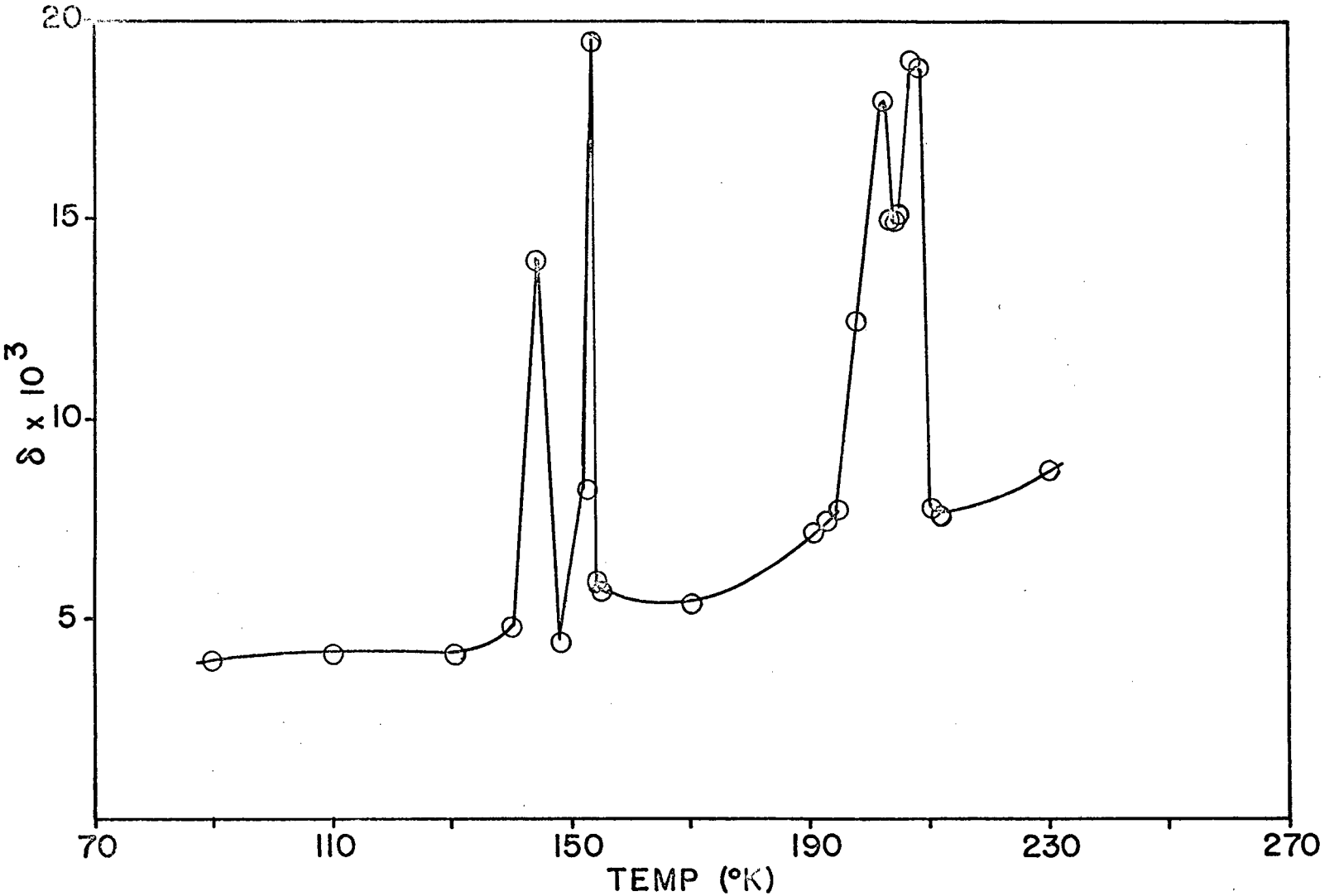

FIGURE 7

were eliminated by a 12 hour anneal at 300°C. The peaks did not reappear upon restraining.

It was also noticed that mild handling damage, sometimes introduced when mounting the specimens, caused the Bordoni peak to appear. The temperature at which the Bordoni peak occurs in silver is below 77°K,[20] and hence, only the high temperature side was observed.

IV. DISCUSSION

A. Silver-Oxygen System

Before attempting a mechanistic interpretation of the results several pertinent features of the silver-oxygen system should be noted. First of all, it has been shown that the solubility of oxygen in silver is proportional to the square root of the pressure,[14] which implies that the oxygen molecule is dissociated at the surface and tha oxygen enters solution as the atomic species. It is also believed that the oxygen atoms occupy interstitial positions in the silver lattice based on the fact that the activation energy for diffusion is only 11.0 kcal/mole as compared to 45 kcal/mole for self-diffusion of silver and 30 to 50 kcal/mole for diffusion of known substitutional solutes (e.g., Zn) in silver. The ionization state and hence the effective radius of oxygen in silver is unknown. Oxygen has a covalent radius of 0.73Å and a crystal or ionic radius of 1.4Å. The atomic radius of silver is 1.44Å while the "radius" of the octahedral interstice in the silver lattice is 0.64Å. From geometrical considerations alone it is evident that oxygen atoms could occupy either substitutional or interstitial sites depending on the ionization state.

It has been found by Quéré that during relatively slow quenches from temperatures of about 600°C a major portion of the vacancies insilver are trapped by oxygen atoms.[25] A value of 0.35 eV has been deduced by Quéré for the oxygen-vacancy binding energy.

Finally it should be pointed out that at an oxygen pressure of 1 atm. Ag_2O becomes thermodynamically stable below 190°C. However, no studies seem to have been carried out on the kinetics

of precipitation of Ag_2O from oxygen-saturated silver.

1. <u>The 130° and 180° Peaks</u>

The fact that the relaxation strength for both these peaks is proportional to the square of the oxygen concentration unequivocally establishes that the atomic configurations responsible for these peaks contain two oxygen atoms. The simplest possible configuration of this type is shown in Figs. 8 and 9. It consists of a pair of oxygen atoms in nearest-neighbor octahedral interstices, the axis of the pair lying along a ⟨110⟩ direction in the silver lattice. (The lattice constant for silver is 4.083 Å and hence the two oxygen atoms in such a pair will be separated by $4.038/\sqrt{2} = 2.89$ A.) It is clear that the reorientation of such a pair can take place by having one of the two oxygen atoms jump to an adjacent unoccupied nearest neighbor interstitial position (see Appendix). Since it is assumed that oxygen diffuses in silver by an interstitial mechanism, the activation energy for a peak due to the reorientation of there pairs should be the same as that for diffusion. Within experimental limits, the measured activation energy for the 180°K peak (11.5 ± 1.0 kcal/mole) does indeed correspond to the activation energy for diffusion of oxygen in silver (11.0 kcal/mole).[14] We conclude, therefore, that the 180°K peak is caused by the stress-induced reorientation of pairs of oxygen atoms whose axes lie along ⟨110⟩.

The peak at 130°K must also involve the reorientation of an oxygen pair, since its height is proportional to the square of the oxygen concentration, but the configuration of this defect

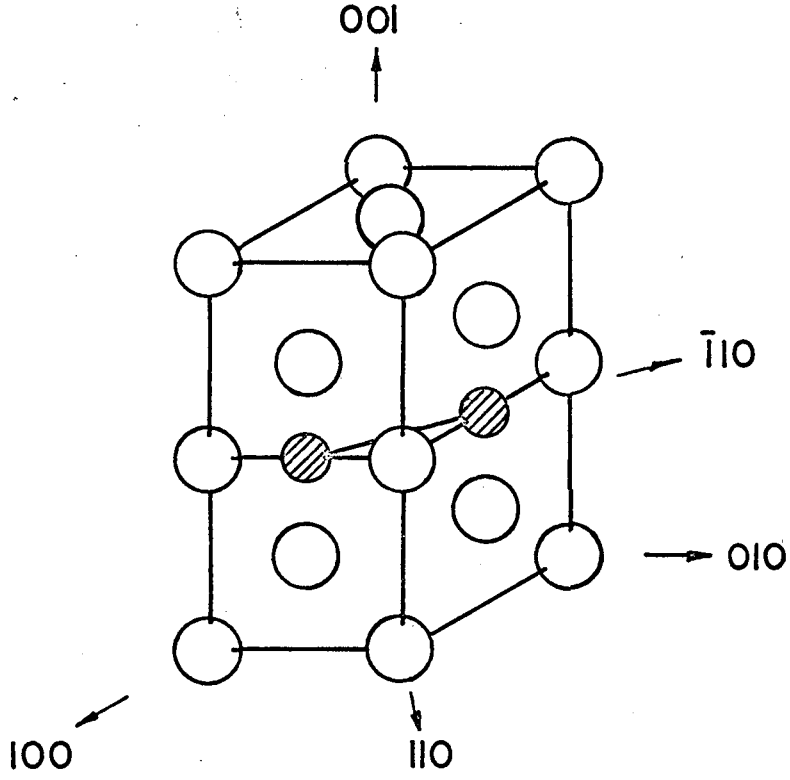

FIGURE 8

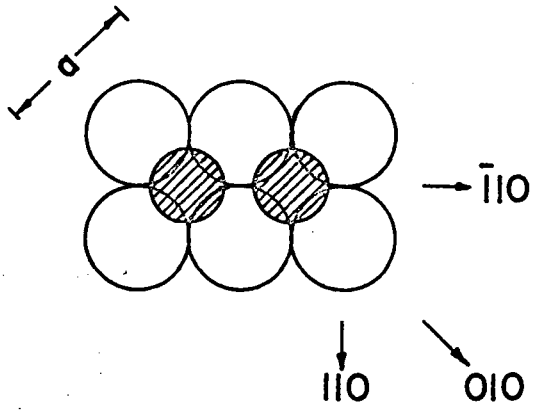

(a)

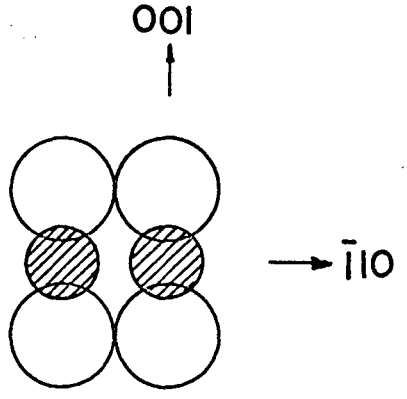

(b)

FIGURE 9

must differ from that of the ⟨110⟩ interstitial pair. In particular, since the activation energy for the 130°K peak is only 8.5 kcal/mole, the oxygen pair must have a configuration which allows it to reorient more easily. The relatively strong binding energy between oxygen atoms and vacancies observed by Quéré suggests that the defect responsible may involve a pair of oxygen atoms in a vacant lattice site. Since it represents the simplest arrangement of this type, we postulate that the defect responsible for the 130°K peak consists of a pair of oxygen atoms symmetrically placed in a vacant lattice site in what is known as the ⟨100⟩ "split interstitial" configuration. This grouping is illustrated in Fig. 10. Comparison of Figs. 9a and 10b (both of which are drawn to scale) shows that reorientation of the ⟨100⟩ split interstitial involves smaller displacements of the surrounding atoms than does the reorientation of a ⟨110⟩ interstitial pair and hence a lower activation energy would be expected.

The assignment of the 130°K peak to the stress-induced reorientation of the ⟨100⟩ split oxygen interstitial and the 180°K peak to the reorientation of ⟨110⟩ interstitial oxygen atom pairs appears to be consistent with all other observations which have been made on this system. For example, some simple calculations have been carried out in the Appendix which indicate that the relaxation strength should be a maximum for both pair configurations when torsional oscillations are applied about a ⟨111⟩ axis. The observed orentation dependence (Table I) is in accord with the prediction.

The mechanism proposed for the 130°K peak also accounts for why a slope of greater than two is obtained when the peak height is plotted vs. oxygen concentration for a specimen saturated at

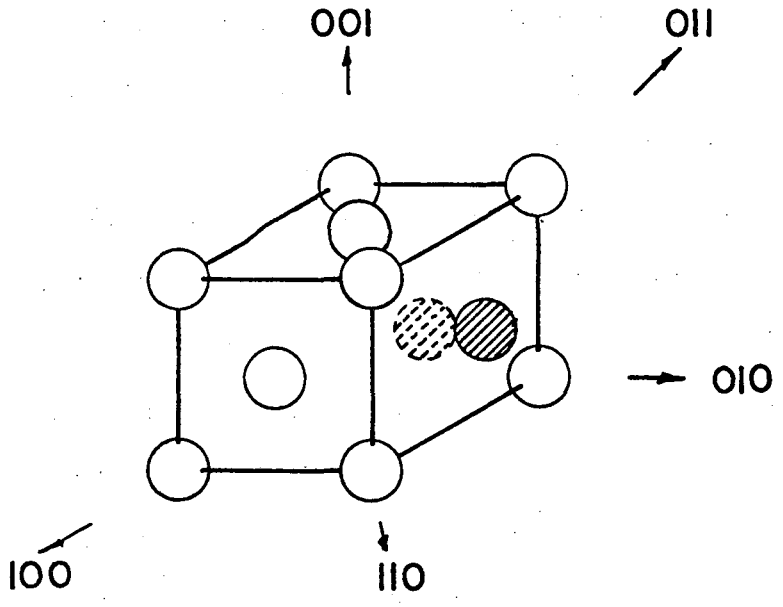

(a)

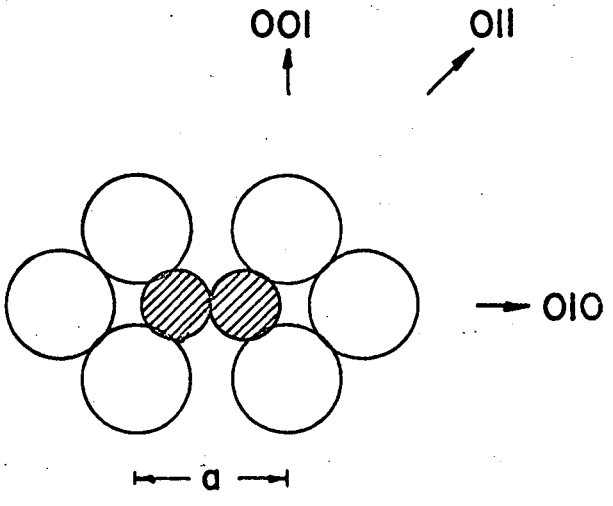

(b)

FIGURE 10

different temperatures. In this case, the concentration of split interstitials is limited by the concentration of vacancies in thermal equilibrium and not by the availability of oxygen pairs. For example, the equilibrium concentration of vacancies at 800°C is about 35 ppm,[26] while oxygen is soluble to the extent of 257 ppm.[14] The data is also consistent with our observation of a simple pair peak, i.e., there are oxygen pairs present which are not associated with a vacancy.

Since this defect contains a vacancy the 130°K peak height should be proportional to $[O]^2[V]$, where $[O]$ is the concentration of oxygen and $[V]$ is the concentration of vacancies. To observe the vacancy concentration dependence we attempted to oxidize at differing temperatures while keeping the oxygen concentration constant. As mentioned in the results section this was unsuccessful.

The fact that annealing for as long as 12 hours at 250°C did not remove the peak is consistent with the relatively high (0.35 eV) binding energy between oxygen and vacancies as observed by Quéré.

2. <u>The 270°K Peak</u>

As mentioned previously, the response of this peak to deformation and ageing seems to indicate that an oxygen-dislocation interaction is involved; however, we have no conclusive evidence for believing that this is the actual mechanism. An alternative possibility, which cannot be disregarded on the basis of the information now available, is that this peak is due to the alternate precipitation and solution of Ag_2O under the application of stress. This mechanism has been suggested by Mura to explain the 230°C peak in iron.[27]

3. Deformation-Produced Peaks

The deformation-produced peaks which we observed in oxygen-free silver, deformed in tension at room temperature, occured at 144°, 153° and 204°K at 1.8 cps. We have calculated from the data reported by Hasiguti et. al. at 1 kc/sec, that the deformation-produced peaks which they found in cold-rolled, polycrystalline silver should have occured at 131°, 162° and 201°K (all ± 25°K) at a frequency of 1 cps.[18] This is quite close agreement, and we might conclude that the corresponding peaks observed in both experiments are produced by the same mechanisms. Since our silver was oxygen-free and of high purity we may also conclude that these peaks do not involve impurities but are caused solely by deformation-produced defects (eg. dislocations, vacancies, etc.). An interesting point is that the peaks found by Hasiguti et. al. were broad, while ours are exceptionally sharp. This may be due to the fact that they used polycrystalline samples rather than single crystals or perhaps to the difference in the type of deformation employed (cold rolling in their case, tension in ours), since it has been observed that deformation-produced peaks are sensitive to the mode of deformation.[28] It is also possible, though unlikely, that the purity of the silver may have had some influence (theirs was 99.99%, ours 99.9999%).

B. Silver-Magnesium-Oxygen System

1. Absence of a Relaxation Peak

The absence of a substitutional magnesium-interstitial oxygen pair peak in this system requires explaination. The first

possibility is that there are no pairs present and that actual particles of MgO exist, or that the magnesium and oxygen form clusters in the silver matrix containing tens to hundreds of atoms.

The second possibility is that the pairs are present but that they do not give rise to a relaxation. There are several reasons why this may be the case.

(a) The first is that if an oxygen atom is strongly bound to a magnesium on an adjacent lattice site the oxygen atom may by less mobile than if it were surrounded by silver atoms. In estimating the temperature at which the peak should occur we used the activation energy for diffusion of oxygen in pure silver (11.0 kcal/mole). Since our temperature range extended only to 290°K we could not observe any peaks due to processes with activation energies in excess of about 20 kcal/mole. Hence the relaxation might exist, but in a higher temperature range.

(b) A related possibility is that there is some electron transfer from the magnesium to the oxygen. This would greatly increase the effective radius of the oxygen atom (covalent r = 0.7 Å, O^{-2} radius in crystals = 1.4 Å) and might effectively lock it in the interstitial hole (r = 0.64 Å), and hence not allow it to reorient.

(c) Oxidation causes a great strengthening effect in this alloy; it is known that internal stresses already exist in the matrix. Such stresses might effectively cause the Mg-O pairs to be ordered initially, a situation which would not be altered by the small external stress applied during the measurements.

2. <u>Background Damping</u>

Since the background damping in our frequency and strain amplitude range is caused by the breaking away of dislocations

from pinning points , our observation that internal oxidation lowers the background considerably leads to the conclusion that effective pinning points are present in the internally oxidized alloys.

V. CONCLUSIONS

1. The presence of oxygen in silver causes three internal friction peaks in the temperature range from 77° to 290°K.

2. The internal friction peak at 180°K at 2 cps in oxygen staurated silver is caused by the stress-induced reorientation of ⟨110⟩ interstitial pairs of oxygen atoms; that at 130°K is caused by pairs of oxygen atoms in a vacant lattice site in the ⟨100⟩ split interstitial configuration.

3. The three peaks which have been observed in high-purity oxygen free silver after straining at room temperature do not involve either substitutional or interstitial impurites but must be associated with deformation-produced defects only.

4. There is no internal friction peak due to magnesium-oxygen pairs in Ag-Mg-O alloys containing up to 1% Mg in the temperature range 77° to 290°K.

5. At the stress levels employed in this investigation the dislocations in oxidized Ag-Mg alloys appear to be effectively pinned.

ACKNOWLEDGMENTS

The author wishes to acknowledge the help of Dr. Lawrence Himmel, under whose guidance this research was performed. He would also like to thank M. W. Guinan for many suggestions and innumerable discussions. This work was done under the auspices of the U. S. Atomic Energy Commission through the Inorganic Materials Research Division of the Lawrence Radiation Laboratory.

APPENDIX

In this section we shall calculate the orientation dependence of the relaxation strength of ⟨100⟩ and ⟨110⟩ interstitial pairs. We shall consider first the ⟨100⟩ split interstitial. In Fig. 10a we have drawn a unit cell of the face-centered cubic lattice with a split interstitial lying along [010] and centered about the position $(\frac{1}{2},1,\frac{1}{2})$. By definition, the axis upon which the two atoms of the split interstitial lie must be of the ⟨100⟩ type, hence the nomenclature "⟨100⟩ split interstitial." The arrangement of the atoms in the (001) or (100) plane which passes through the position $(\frac{1}{2},1,\frac{1}{2})$ is shown in Fig. 10b. The atomic sizes are drawn to scale taking the lattice parameter of silver as 4.08 Å, the atomic radius of silver as 1.41 Å and the radius of the interstitial oxygen atom as 0.90 Å. From inspection we see that the distortion caused by the interstitial pair must be the same in the [001] and [100] directions. Assuming that the atoms are hard spheres in contact, we can calculate the distortions along particular crystallographic directions. We find that the radius of the interstitial atom required to just touch a matrix atom is r = 0.219a, where a is the lattice parameter. The elongation, δ, due to the presence of the split interstitial (for $r \geqslant 0.219a$) is then given by

$$\delta_{[010]} = 2.97\, r - .652\, a \qquad \text{(A-1)}$$

$$\delta_{[100]} = \delta_{[001]} = 1.74\, r - .381\, a \qquad \text{(A-2)}$$

with r = 1.0 Å and a = 4.08 Å, $\delta_{[001]}$ = 0.19 Å and $\delta_{[010]}$ = 0.31 Å; hence, the distortion along the pair axis is approximately 1.5 times the distortion perpendicular to it. Therefore, we expect that

when the matrix is strained this defect will prefer a position in which the axis of the pair is parallel to the tensile axis of the specimen. As we have stated the pair axis must always be a ⟨100⟩; from this we can predict the orientation dependence.

If a tensile stress is applied along [100], interstitial pairs whose axes were originally parallel to [010] or [001] will tend to reorient themselves parallel to [100] and hence we expect to observe a relaxation. Consider now a tensile stress applied along [111]. All three ⟨100⟩ directions make equal angles with any ⟨111⟩ so none of these orientations will be preferred and no relaxation peak will be observed. Hence, we expect a maximum relaxation strength when the tensile axis lies along ⟨100⟩ and a minimum when tension is applied along ⟨111⟩.

We shall now consider a conventional interstitial pair. In the f.c.c. structure, pairs of this type have a ⟨110⟩ direction as the pair axis. One such pair is shown in Fig. 8. In order to calculate the distortions, the (001) and the (110) planes are redrawn in Fig. 9, with the same scale as was used in Fig. 8b. The radius of the octahedral interstitial hole is found to be r = 0.146a, and the elongations for $r \geq 0.146a$ are

$$\delta_{[001]} = 2r - .293a \qquad \text{(A-3)}$$

$$\delta_{[110]} = 1.41r - .207a \qquad \text{(A-4)}$$

$$\delta_{[\bar{1}10]} = 2.83r - .414a \qquad \text{(A-5)}$$

when the axis of the pair lies along $[\bar{1}10]$. With r = 1.0 Å and a = 4.08 Å, $\delta_{[001]}$= 0.79 Å, $\delta_{[110]}$= 0.56 Å, and $\delta_{[\bar{1}10]}$= 1.14 Å. Once again the pair axis is the direction of greatest distortion.

Calculation of the orientation dependence of this defect is more involved than for the ⟨100⟩ split interstitial, since the relaxation strength will not be zero for stresses applied along any of the principal crystallographic axes. Consider a tensile stress applied parallel to a {111} direction. Three of the six ⟨110⟩ directions are normal to ⟨111⟩, these will be designated as n-type orientations; the other three ⟨110⟩ directions have direction cosines of $\sqrt{2/3}$ with ⟨111⟩, these will be called p-type orientations. If the pair axis is originally in one of the n-type orientations (specifically, with its axis along $[\bar{1}10]$ as in Fig. 8) it will cause a distortion along [111] of

$$\delta_{[111]n} = \sqrt{\tfrac{2}{3}}\,\delta_{[110]} + \sqrt{\tfrac{1}{3}}\,\delta_{[001]} = 2.3r - .338\,a \qquad \text{(A-6)}$$

If the pair now relaxes to a p-type orientation, the distortion along [111] is

$$\delta_{[111]p} = \sqrt{\tfrac{2}{3}}\,\delta_{[\bar{1}10]} - \sqrt{\tfrac{1}{3}}\,\delta_{[001]} = 1.15r - .169\,a \qquad \text{(A-7)}$$

where the subscripts refer to the directions in Fig. 8. Thus,

$$\delta_{[111]n} - \delta_{[111]p} = 1.15r - .169\,a \qquad \text{(A-8)}$$

and we see that a ⟨110⟩ pair will produce a greater distortion along a ⟨111⟩ when it is in an n-type orientation; this is opposite in sense to what might have been expected from a preliminary observation.

Consider now a tensile stress applied along the {001} direction. There are two ⟨110⟩ directions perpendicular to the ⟨001⟩ (n-type orientations) and four at 45° to it (p-type orientations). The distortion along [001] due to a pair in a n-type orientation is given by Eq. A-3. The elongation along [001] due to a pair in

a p-type orientation is

$$\delta_{[001]p} = \frac{1}{\sqrt{2}}\delta_{[110]} + \frac{1}{\sqrt{2}}\delta_{[\bar{1}10]} = 3r - .438\,a \qquad \text{(A-9)}$$

where the subscripts again refer to directions in Fig. 8. The difference in the elongation produced along [001] by n and p-type pairs is

$$\delta_{[001]p} - \delta_{[001]n} = r - .146\,a \qquad \text{(A-10)}$$

To calculate the relaxation strength we must also consider the probability that an atomic jump will reorient the pair into a new type of position, since for the low stress levels that we employ the jump direction is essentially random. In the f.c.c. system the octahedtal interstitial positions also form a face-centered lattice. In Fig. 11 we have drawn an interstitial position surrounded by its twelve nearest neighbor interstitial positions. Since one interstitial atom is located in the center of the figure, the second atom of the pair must occupy one of the twelve surrounding positions. Now let us apply a tensile stress along [001]. The pair will originally be in an n-type orientation only of the second atom is located in one of the four positions designated as "a" in Fig. 11. The probability of this occuring is 1/3. From an "a" position there are four possible jumps, all of which are to "b" positions and all of which rotate the pair axis to a p-type orientation. Thus, the probability of a jump relaxing the pair is 1, and the total relaxation probability is therefore 1/3. As a check, consider a compressive stress applied along [001]. The relaxation will now be accomplished by rotating the pair from a p-type orientation to an n-type orientation.

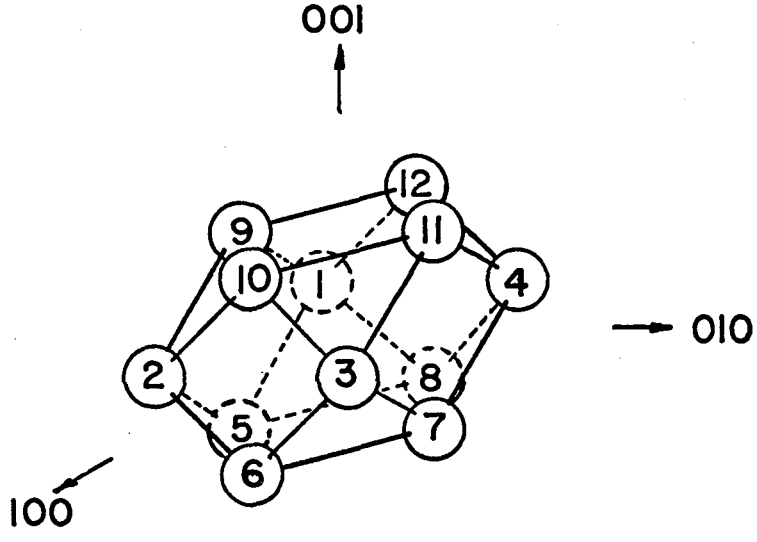

FIGURE 11

The probability that the second atom is originally in a "b" position is 2/3. There are four possible jumps from a "b" position, but only two are to an "a" position. Therefore, the probability of a jump relaxing the pair is 1/2, and the total relaxation probability is 1/3, as before.

Consider now a tensile stress applied along a [111]. The n-type orientations are formed when the second atom is in a "c" position and the p-type are formed when it is in a "d" position. Relaxation is accomplished by a jump from a p-orientation to an n-orientation. The probability of the pair originally being of a p-type is 1/2. Of the four possible jumps from the "d" positions only two change the orientation of the pair to n-type, hence, the total relaxation probability is 1/4. The same holds for compression along [111].

We can now estimate the orientation dependence of the relaxation strength. For tension along [001] the probability factor is 1/3 and the elongation difference is r - 0.146a, hence the relaxation strength is proportional to 0.33(r - 0.146a). For tension in the [111] the probability factor is 1/4 and the elongation difference is 1.15r - 0.169a, which yields 0.25(1.15r - 0.169a). This may be summarized as

$$\frac{\Delta E_{[100]}}{\Delta E_{[111]}} = \frac{.33(r-.146a)}{.25(1.15r-.169a)} \qquad \text{(A-11)}$$

For a = 4.08 Å and r = 1.0 Å this ratio is 1.17; for r = 0.9 Å it is 1.21. It should be noted that this is a much weaker orientation dependence than that for relaxation of the ⟨100⟩ split interstitial. However, the calculations are based on a hard sphere model which

may not be valid for real crystals.

Seraphim and Nowick have shown that the sense of the orientation dependence of the relaxation strength in torsion is exactly opposite to that in tension.[29] Hence our conclusion is that both ⟨100⟩ split interstitials and ⟨110⟩ interstitial pairs will show a greater relaxation strength when tested in torsion about ⟨111⟩ than for torsion about ⟨100⟩ and that the effect should be greater for the ⟨100⟩ pair than for the ⟨110⟩ pair.

REFERENCES

1. C. Zener, Elasticity and Anelasticity of Metals (Univ. of Chicago Press, 1948), Chap. 5.
2. A.S. Nowick, Progress in Metal Physics, 4, 1, (1953).
3. K.M. Entwistle, Metallurgical Reviews, 7, 175, (1962).
4. B.S. Berry, Acta Metallurgica, 10, 271, (1962)
5. A.S. Nowick and B,S. Berry, Acta Metallurgica, 10, 312 (1962).
6. H. Caswell, Thesis, Cornell Univ. (1957), AFOSR-TR-57-69.
7. A.S. Nowick and B.S. Berry, IBM Journal, 297 (October 1961).
8. C. Wert and J. Marx, Acta Metallurgica, 1, 113 (1953).
9. T.S. Ke and C.M. Wang, Scienta Sinica, 4, 501 (1955). T.S. Ke and C.T. Tsien, Scienta Sinica, 5, 625 (1956).
10. T.S. Ke, C.T. Tsien and M. Karel, Scienta Sinica, 4, 519 (1955).
11. A Seeger, P. Schiller and H. Kronmuller, Phil Mag., 5, 853 (1960).
12. A.S. Nowick and R.J. Sladek, Acta Metallurgica, 1, 131 (1953).
13. W.G. Nilson, Can. J. Phys., 39, 119 (1961).
14. W. Eichenauer and G. Muller, Zeit. fur Metal., 53, 321 (1962).
15. S. Pearson and L. Rotherham, Journal of Metals, 8, 894 (1956).
16. W. Koester, Zeit. fur Metal., 39, 9 (1948).
17. A S. Nowick, Metal Interfaces, (ASM, Cleveland), 248.
18. R.R. Hasiguti, N. Igata and G Kamoshita, Acta Metallurgica, 10, 442 (1962).
19. R.R. Hasiguti, J. Phys. Soc. Japan, 18 suppliment I, 114 (1963).
20. S. Okuda, J. Phys. Soc. Japan, 18, suppliment I, 187 (1963).
21. J.L. Meijering and M.J. Druyvesteyn, Philips Res. Rep., 2, 81 (1947).

22. C. Wert, Modern Research Techniques in Physical Metallurgy, (ASM 1953).

23. D.P. Petarra, Thesis, Columbia University, (1962).

24. R. Rawlings and P.M. Robinson, Acta Metallurgica, 7, 659 (1959).

25. Y Quere, J. Phys. Soc. Japan, 18, suppliment III, 91 (1963).

26. R.O. Simmons and R.W. Baluffi, Phys. Rev., 119, 600 (1960).

27. T. Mura, I.Tamura and J.O. Brittain, J. Appl. Phys., 32, 92 (1961)

28. D.H. Niblett and J. Wilks, Advances in Physics, 9, 1 (1960).

29. D.P. Seraphim and A.S. Nowick, Acta Metallurgica, 9, 85 (1961).

FIGURE CAPTIONS

Fig. 1. The torsion pendulum: a-bell jar, b-base plate, c-vacuum jacket, d-specimen, e- specimem support, f-lower specimen grip, g-upper specimen grip, h-to vacuum pumps, i-inertia member, j- counter-weight, k-pulley, l-fine piano wire.

Fig. 2. Positioning of the three photocell detectors. The incident light beam lies in the plane of the drawing.

Fig. 3. The effect of internal oxidation on the logarithmic decrement of a ⟨110⟩ oriented Ag-1 at.% Mg single crystal. O = as grown, △ = after oxidation for 48 hours at 600°C in 1 atm. of oxygen, □ = after 48 hours at 800°C in a vacuum of less than 10^{-6} mm Hg. Frequency = 1.6 cps.

Fig. 4. The logarithmic decrement of a ⟨111⟩ silver specimen containing about 250 ppm O_2. Frequency = 2.1 cps.

Fig. 5. The dependence of the peak height for the 130° and 180° peaks in a pure silver specimen of ⟨111⟩ orientation saturated at varying oxygen pressures at a constant temperature (800°C). The lines drawn both have a slope of 2.0. O = 130° peak, △ = 180° peak.

Fig. 6. The dependence of the peak height of a ⟨100⟩ pure silver specimen on the oxygen concentration when oxidized at varying temperatures and a constant pressure of O_2 (1 atm.). Slope = 2.8.

Fig. 7. The internal friction of oxygen free pure silver at a frequency of 1.8 cps. The crystal was strained 2% in tension at room temperature. The orientation is close,to ⟨110⟩.

Fig. 8. F.C.C. unit cells containing a pair of interstitial atoms with their axis along $[\bar{1}10]$. No scale.

Fig. 9. (a.) The (001) plane of Fig. 8 drawn to scale for a lattice parameter of 4.08 and an interstitial atom radius of 0.9. (b.) The (110) plane of Fig. 8 with the same scale as part (a.).

Fig. 10. (a) F.C.C. unit cell with a split interstitial (shaded atoms) along $[010]$ at the position $(\frac{1}{2},1,\frac{1}{2})$. No scale. (b). The (010) plane, of the same unit cell, which passes through the position $(\frac{1}{2},1,\frac{1}{2})$. The scale is the same as that of Fig. 9.

Fig. 11. The twelve nearest neighbors of an octahedral interstitial position in f.c.c. The "a" positions are 1,2,3 and 4. The "b" positions are 5,6,7,8,9,10,11 and 12. The "c" positions are 2,4,6,7,9 and 12. The "d" positions are 1,3,5,8,10 and 11.

This report was prepared as an account of Government sponsored work. Neither the United States, nor the Commission, nor any person acting on behalf of the Commission:

A. Makes any warranty or representation, expressed or implied, with respect to the accuracy, completeness, or usefulness of the information contained in this report, or that the use of any information, apparatus, method, or process disclosed in this report may not infringe privately owned rights; or

B. Assumes any liabilities with respect to the use of, or for damages resulting from the use of any information, apparatus, method, or process disclosed in this report.

As used in the above, "person acting on behalf of the Commission" includes any employee or contractor of the Commission, or employee of such contractor, to the extent that such employee or contractor of the Commission, or employee of such contractor prepares, disseminates, or provides access to, any information pursuant to his employment or contract with the Commission, or his employment with such contractor.