UCRL-11048

University of California

Ernest O. Lawrence Radiation Laboratory

TWO-WEEK LOAN COPY

This is a Library Circulating Copy which may be borrowed for two weeks. For a personal retention copy, call Tech. Info. Division, Ext. 5545

WATER-COOLED HEATSINKS FOR HIGH-CURRENT SCR'S

Berkeley, California

DISCLAIMER

This document was prepared as an account of work sponsored by the United States Government. While this document is believed to contain correct information, neither the United States Government nor any agency thereof, nor the Regents of the University of California, nor any of their employees, makes any warranty, express or implied, or assumes any legal responsibility for the accuracy, completeness, or usefulness of any information, apparatus, product, or process disclosed, or represents that its use would not infringe privately owned rights. Reference herein to any specific commercial product, process, or service by its trade name, trademark, manufacturer, or otherwise, does not necessarily constitute or imply its endorsement, recommendation, or favoring by the United States Government or any agency thereof, or the Regents of the University of California. The views and opinions of authors expressed herein do not necessarily state or reflect those of the United States Government or any agency thereof or the Regents of the University of California.

Submitted to Control Engineering for publication

UCRL-11048

UNIVERSITY OF CALIFORNIA
Lawrence Radiation Laboratory
Berkeley, California

Contract No. W-7405-eng-48

WATER-COOLED HEATSINKS FOR HIGH-CURRENT SCR'S

Everett L. Harris, Jr.

October 4, 1963

WATER-COOLED HEATSINKS FOR HIGH-CURRENT SCR'S*

Everett L. Harris, Jr.

Lawrence Radiation Laboratory
University of California
Berkeley, California

October 4, 1963

This water-cooled heatsink allows a 110-a SCR to operate with a 10°C rise at the stud. The heatsink performs satisfactorily at flow rates as low as 0.25 GPM. Experimental results show the effect of water flow rate and mounting method. The best heat transfer was obtained using XC-2-0106 silicone compound at the heat transfer surface. A simplified design procedure is presented.

INTRODUCTION

High-current semiconductor devices must be properly cooled if they are to operate reliably at rated current. The low junction-to-case thermal resistance of such devices is of little value if the heatsink thermal resistance is high by comparison. Air-cooled heatsinks become bulky when one tries to achieve a thermal resistance less than 1°C/w. Moreover, the high ambient temperature present in some equipment racks often precludes the use of air cooling.

Water cooling has long been used to overcome the above-mentioned difficulties. This note describes an operational water-cooled heatsink for individual 2N1911 SCR's. The basic design can easily be adapted to semiconductors of different stud sizes. Also, the design procedure is given to enable the engineer to rapidly design similar heatsinks.

HEATSINK

The heatsink is shown in Figure 1. Three 1/4-in-diameter water passages carry water around the mounting base of the semiconductor. The 1-in counterbore moves the heat transfer surface closer to the cooling water and allows more threads to protrude through the mounting hole. This 1-in counterbore should be cut on a lathe to insure a smooth flat surface for good heat transfer. Thinner heatsink material (e.g., 3/8-in) could have been used,

SUBJECT	SKETCH	JOB ORDER INFORMATION	
SCR HEAT SINK	RADIATION LABORATORY UNIVERSITY OF CALIFORNIA - BERKELEY	JOB NO.	TAG NO.
DRAWN BY NMLIT		SERIAL NO	NO. REQD.
DATE 7-21-63 / BUILDING NO. 71 / ROOM NO 269	APPROVED BY / DATE	DATE ISSUED	DATE REQD.
		DELIVER TO	

MATERIAL - HARD COPPER

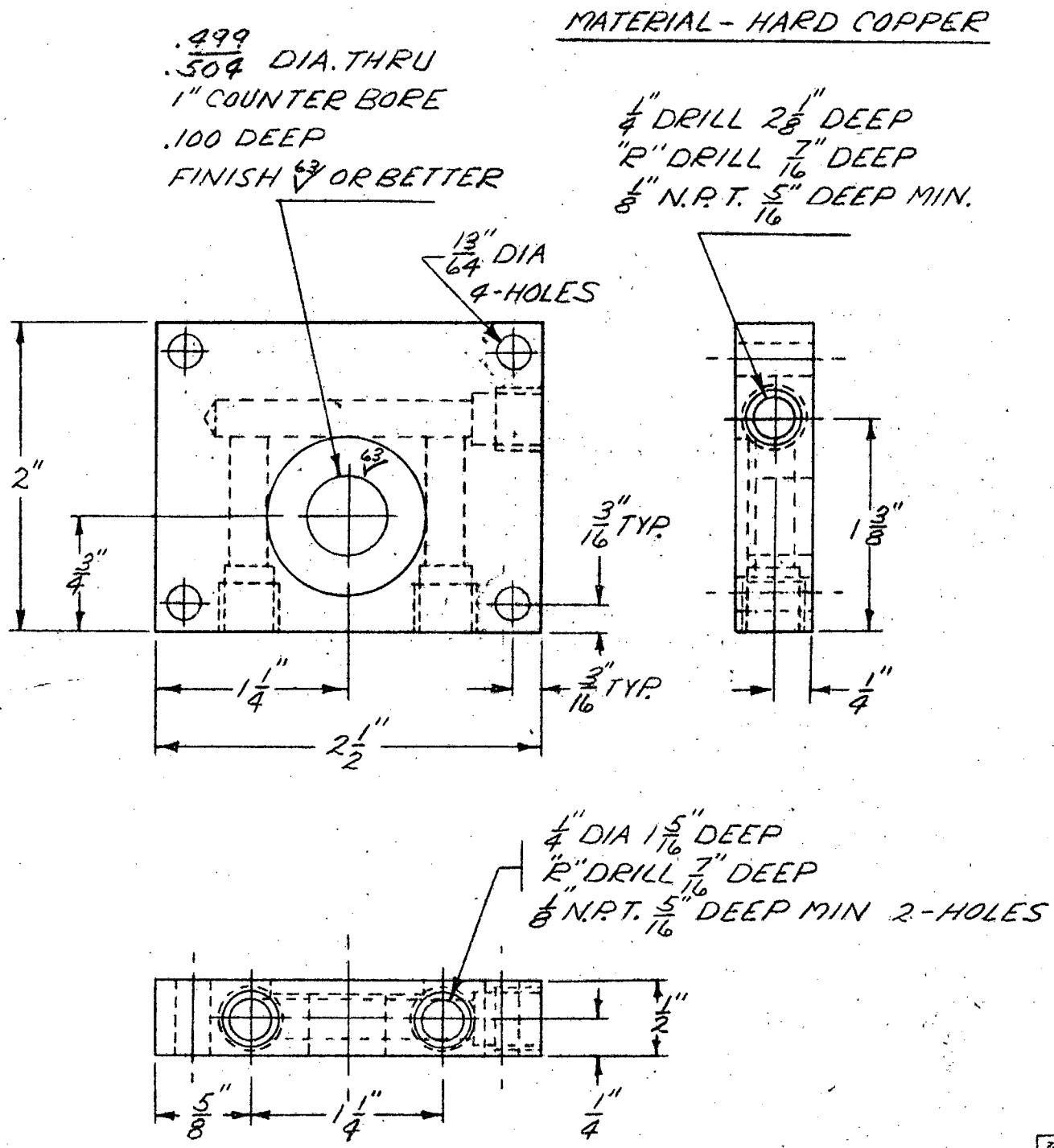

NOTE

REMOVE ALL SHARP EDGES .015 X 45° MAX.

FIGURE 1.

SCR HEAT SINK

SKETCH NUMBER

thus eliminating the necessity to counterbore, if it were not for the 1/8-in pipe fittings.

This heatsink allows more heat transfer surface than those employing two drilled holes joined at the ends by a soldered tube. Moreover, the 1/8-in pipe plug can be removed if it should become necessary to clean the water passages.

The heatsink can be mounted by using any two of the four 13/64-in holes, thus leaving both SCR nut surfaces accessible for tightening to the proper torque.

Total shop time for machining is 1-1/2 to 2 hr; the only critical operation is the surface-finishing of the 1-in counterbore.

Figure 2 is an assembly drawing showing the SCR mounted to the heatsink.

INSTRUMENTATION

The SCR stud temperatures were measured with a copper-constantan thermocouple soldered to the flat surface of the stud hex. The temperature at this point closely approximates the temperature of the stud immediately below the rectifier junction.[1] The heatsink temperature was measured using a thermocouple located in the front of the heatsink about 0.05 in under the SCR heat transfer surface.

Two GE 2N1911 SCR's, rated at 100 a rms each, were connected back-to-back as shown in Figure 3. The firing signal was the ac wave shown in the figure. When connected as shown, the SCR circuit is capable of carrying 155 a rms provided the stud temperature does not go above 62°C. (This results in a junction temperature of 125°C.)

EXPERIMENTAL RESULTS

Figure 4 shows SCR stud temperature rise versus SCR current, with cooling water flow rate as a parameter. Note that the current here is the total rms current through both SCR's. This current is $\sqrt{2}$ times the rms current through each SCR.

As specified in Figure 4, the SCR heat transfer surface was coated with XC-2-0106 silicone compound and the stud was torqued to 12.5 ft-lb.

Figure 5 shows how various mounting methods affect the stud-to-heatsink temperature drop. Note that the XC-2-0106 silicone compound was about 44% more effective than the DC-200-1000CS silicone fluid. Note, also, that decreasing the stud torque by 20% caused the stud-to-heatsink temperature drop to increase

SUBJECT	SKETCH	JOB ORDER INFORMATION	
SCR & HEAT SINK ASSY	RADIATION LABORATORY UNIVERSITY OF CALIFORNIA - BERKELEY	JOB NO.	TAG NO.
DRAWN BY W.M.LIT		SERIAL NO.	NO REQD
DATE 7-21-63 / BUILDING NO. 71 / ROOM NO. 269	APPROVED BY / DATE	DATE ISSUED	DATE REQD.
		DELIVER TO	

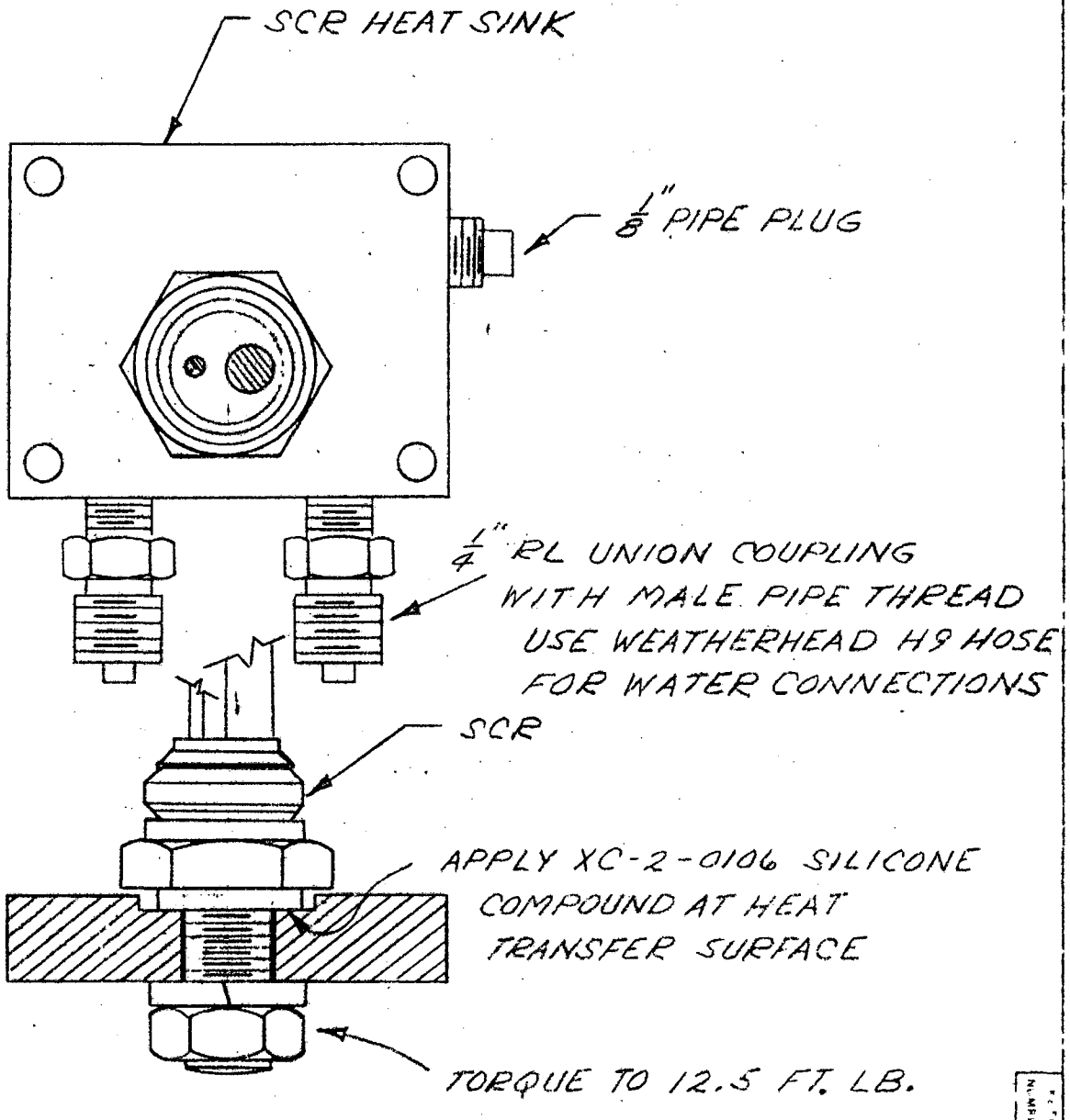

FIGURE 2.

SCR AND HEAT SINK ASSEMBLY DWG.

LAWRENCE RADIATION LABORATORY · UNIVERSITY OF CALIFORNIA

ENGINEERING NOTE

SUBJECT

NAME

DATE

FILE NO.

PAGE

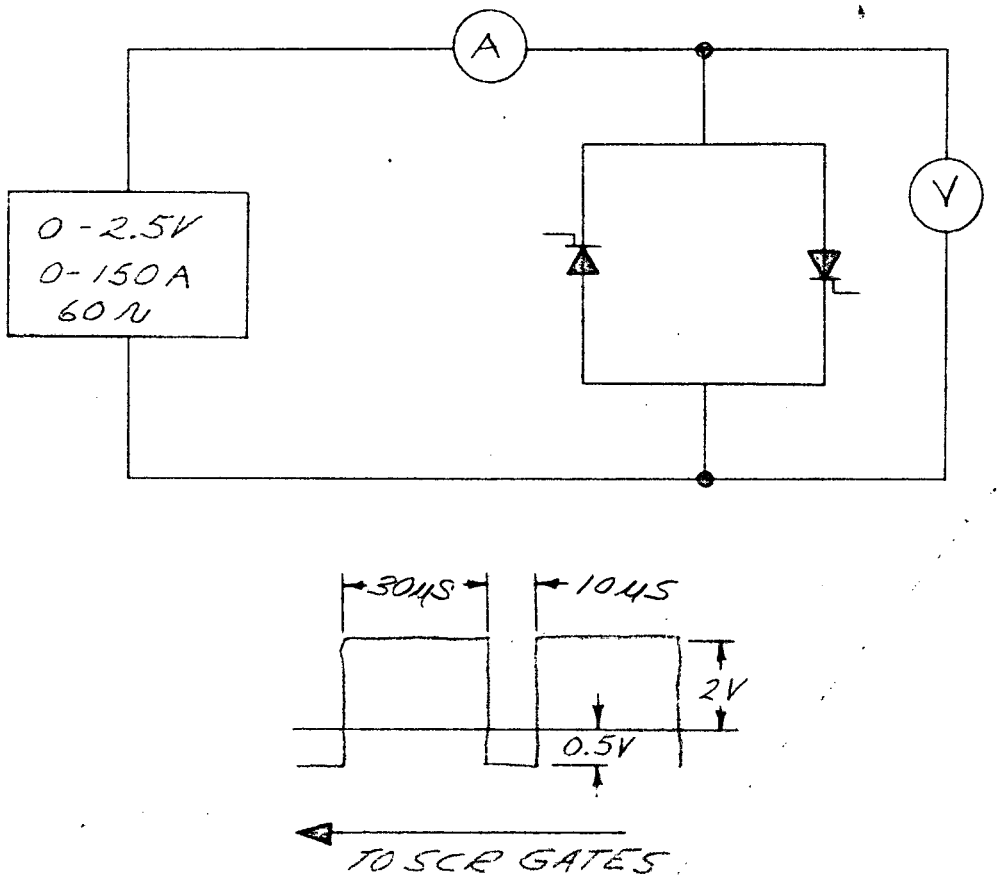

FIGURE 3.

PROVIDED FOR SCR HEATSINK [illegible]

LAWRENCE RADIATION LABORATORY - UNIVERSITY OF CALIFORNIA

ENGINEERING NOTE

SUB: WATER TO STUD [illegible] RISE [illegible]

[illegible] WATER [illegible]

NAME

DATE

FIGURE 4.

[illegible] 12.5 FT-LB

[illegible] SILICONE COMPOUND

USED [illegible] STUD AND HEATSINK

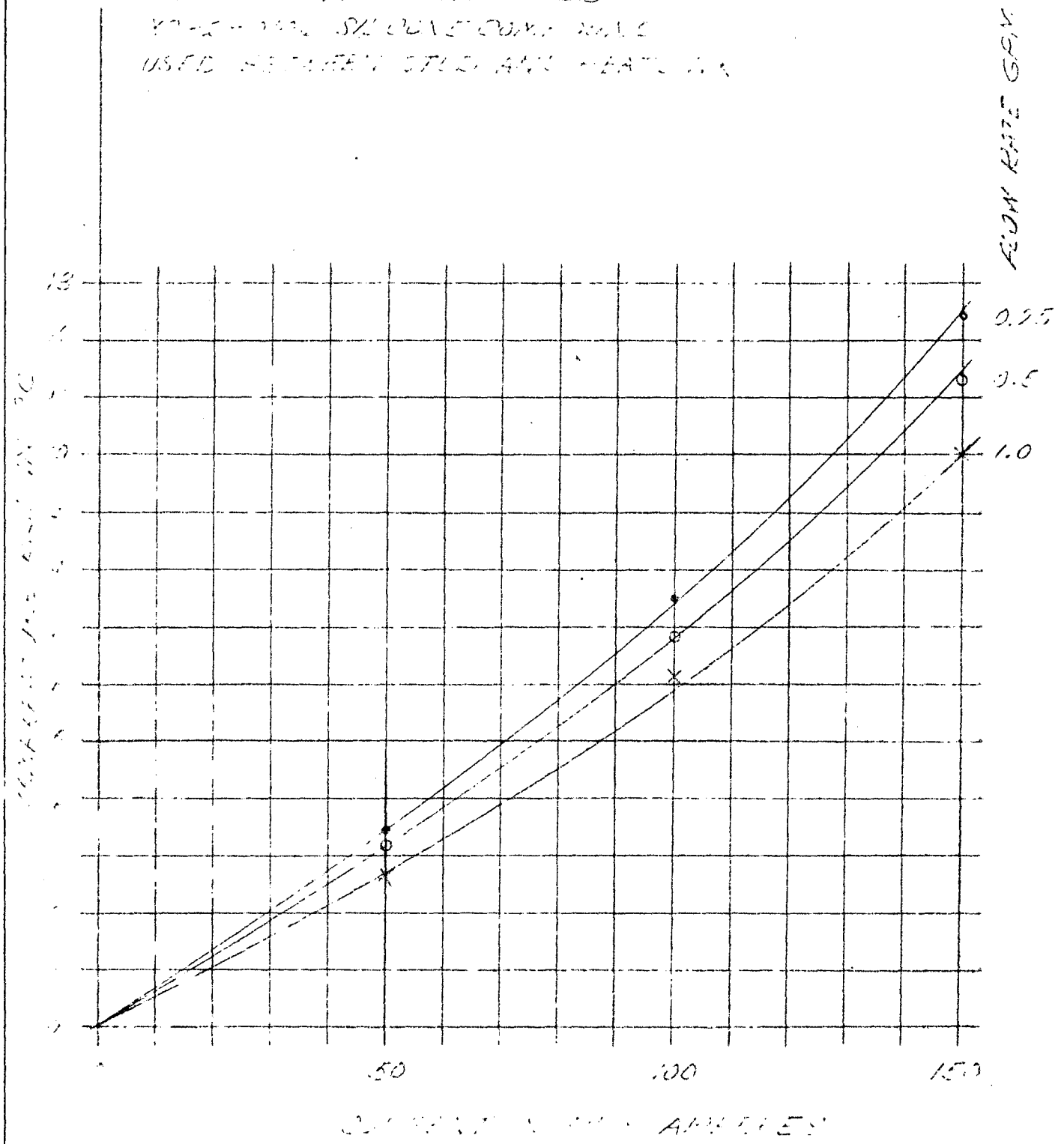

LAWRENCE RADIATION LABORATORY · UNIVERSITY OF CALIFORNIA

ENGINEERING NOTE

SUBJECT: HEATSINK TO STUD TEMPERATURE RISE FOR VARIOUS MOUNTING METHODS

FILE NO. | PAGE

NAME

DATE

FIGURE 5

TWO 2N1911 SCR'S BACK TO BACK
WATER FLOW RATE 0.5 GPM

CURVE A 12.5 FT LB., DRY.
CURVE B 12.5 FT LB., DC-200-1000CS SILICONE FLUID
CURVE C 10.0 FT LB., XC-2106 SILICONE COMPOUND
CURVE D 12.5 FT LB., XC-2010 SILICONE COMPOUND

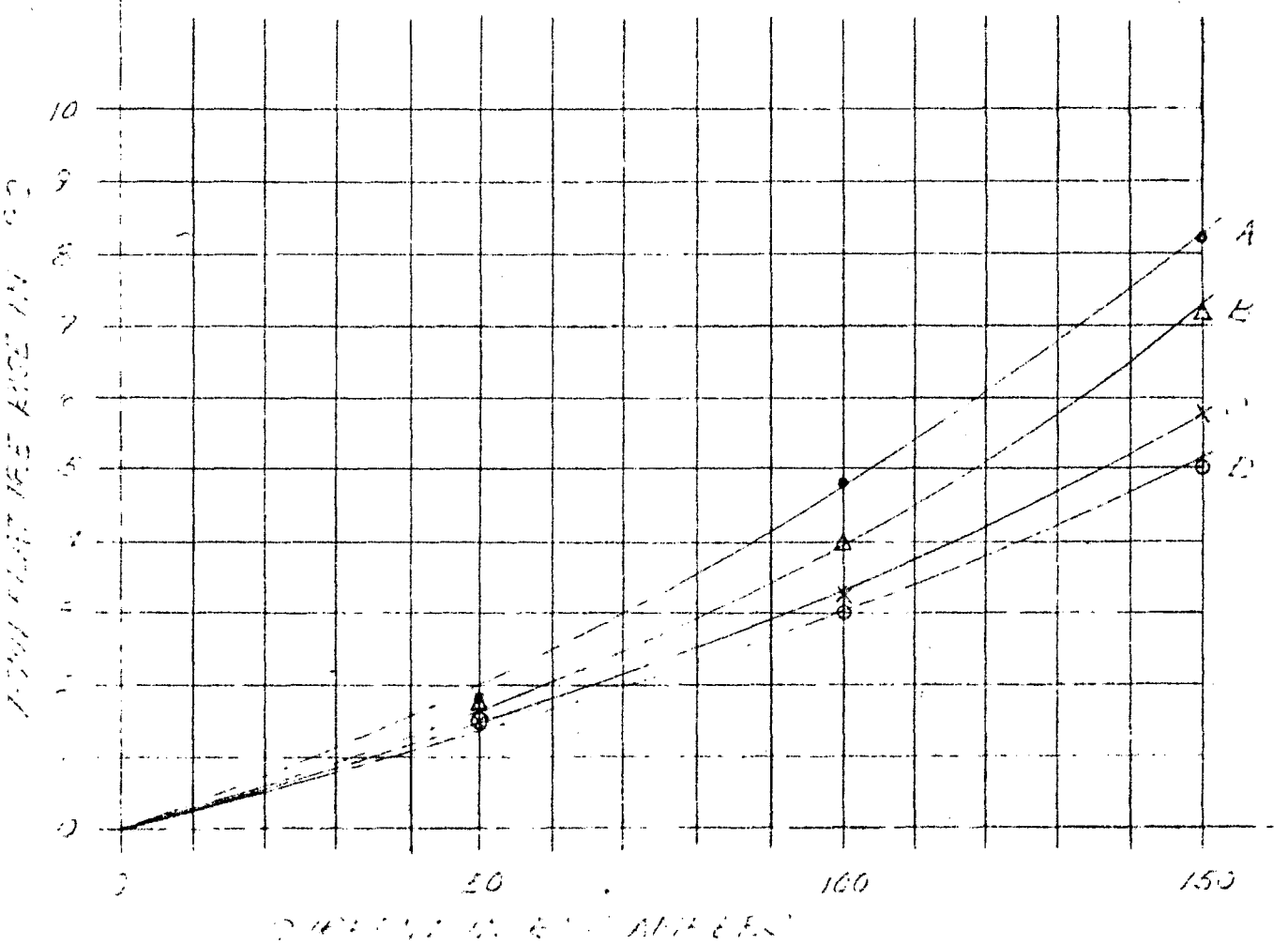

by 15%.

With 150 a total current, the measured power dissipation was 100 w per SCR. This implies a stud-to-heatsink thermal resistance of 0.05 °C/w, using the XC-2-0106 silicone compound and 12.5 ft-lb of torque. The table gives the thermal resistance from heatsink to cooling water for various water flow rates.

Water flow rate, GPM	Thermal resistance, sink-to-water, °C/w
0.25	0.09
0.5	0.0675
1.0	0.055

Thus, at a flow rate of 1 GPM, the stud-to-heatsink thermal drop is approximately equal to the heatsink-to-water thermal drop. This, then, represents a point of diminishing returns beyond which an increase in the cooling water flow rate will not substantially reduce the stud temperature.

Figure 6 shows the measured heatsink pressure drop as a function of water flow rate. The upper curve gives the pressure drop across two heatsinks, 68 in of Weatherhead H-9 1/4-in-ID hose, and the associated fittings. The lower curve gives the pressure drop across one heatsink, two RL union couplings, and two tubing nipples.

DESIGN PROCEDURE

This design procedure makes use of the data sheets in the Appendix (from Lawrence Radiation Laboratory UCRL Design Data Book). The procedure is intended to yield only approximate results, and some of the assumptions and approximations are admittedly crude. Nevertheless, this design procedure can give the engineer a quick conservative answer which can be refined experimentally, if necessary.

LAWRENCE RADIATION LABORATORY · UNIVERSITY OF CALIFORNIA

ENGINEERING NOTE

SUBJECT HEATSINK PRESSURE DROP VS WATER FLOW RATE

NAME

DATE

FIGURE 6

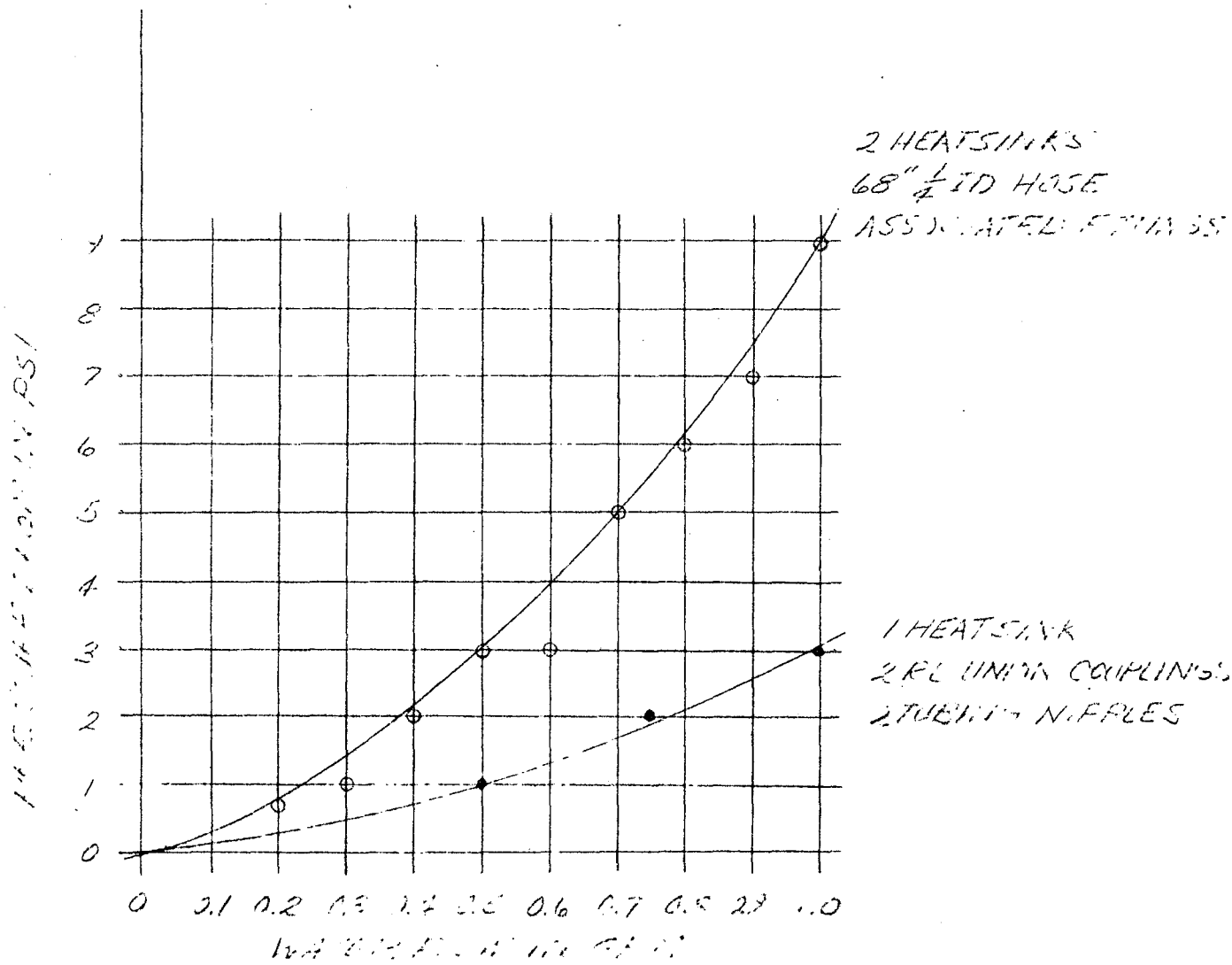

NOMENCLATURE

Symbol	Definition	Units
A	Cross-sectional area of tube	in^2
a	Heat transfer area	in^2
D	Diameter of semiconductor heat transfer surface	in
d	Diameter of water passage	in
F	Water flow rate	gal/min
K	Thermal conductivity of heatsink material	$\frac{\text{calories}}{\text{sec-cm°C}}$
L	Equivalent total length of all tubing and fittings	ft
L_e	Equivalent length of elbows	ft
L_h	Length of connecting hose	ft
L_w	Length of water passage	ft
l	Length of tube	in
M	Heat transfer rate	watts/in^2
P	Power dissipation	watts
p	Pressure	psi
$R_{T(H-W)}$	Heatsink-to-water thermal resistance	°C/watt
$R_{T(J-S)}$	Junction-to-stud thermal resistance	°C/watt
$R_{T(S-H)}$	Stud-to-heatsink thermal resistance	°C/watt
S	Mean cross-sectional area of heatsink material from semiconductor mounting surface to cooling water.	in^2
T_H	Heatsink temperature at stud surface	°C
T_J	Junction temperature	°C
T_S	Semiconductor stud temperature	°C
T_W	Cooling water temperature	°C
t	Mean thickness of heatsink material from semiconductor mounting surface to cooling water	in
V	Velocity of water	ft/sec
θ	Film drop	°C

Step 1. Determine semiconductor power dissipation and maximum allowable stud temperature. Data from the manufacturer's specification sheet usually allows calculation by at least one of the following methods.

(a) Often maximum allowable stud temperature and power dissipation at maximum rated current are given directly in the specification.

(b) Given maximum power dissipation, junction-to-stud thermal resistance, and maximum junction temperature (usually 125°C for silicon),

$$T_S = T_J - R_{T(J-S)}P \tag{1}$$

(c) Power dissipation can be found by integrating the e-i curve graphically or analytically.

NOTE: Other forms of power losses—such as those due to forward and reverse leakage currents, those due to gate current, and those due to switching—are neglected since these losses are usually negligible.

Step 2. Determine maximum allowable heatsink temperature.

(a) First determine the stud-to-heatsink thermal resistance. Check reference 2 than estimate if necessary. For large power rectifiers, $R_{T(S-H)}$ should be less than 0.1°C/watt when XC-2-0106 silicone compound is used:

$$T_H = T_S - R_{T(S-H)}P \tag{2}$$

Step 3. Determine required water flow rate.

(a) Assume the film drop is the major component of the heatsink-to-water temperature drop.

(b) Pick $\theta = 0.8\,(T_H - T_W)$. (3)

(c) Choose a reasonable size water passage and estimate the heat transfer area:

$$a = \pi d l \approx \pi^2 dD \tag{4}$$

(This approximation is made because D is more likely to be known rather than l).

(d) Compute heat transfer rate:

$$M = \frac{P}{a} \tag{5}$$

(e) Read water velocity from Design Data Sheet 38 opposite $\theta = 0.8(T_H - T_W)$.

(f) Compute water flow rate:

$$F = 3.13\ VA \tag{6}$$

(g) Reiterate Step 3, starting with (c) if the water flow rate found in (f) is unreasonable.

Step 4. Check pressure drop.

(a) Use Figure 7 to determine the equivalent length of the square elbows formed at the intersections of the water passages in the heatsink. Neglect the pressure drop in the fittings even though this is often a poor assumption.

$$L = L_E + L_W + L_H \tag{7}$$

(b) Read the pressure drop from Design Data Sheet 10.

(c) Reiterate Steps 3 and 4 if pressure drop found in (b) is unreasonable.

Step 5. Compute water temperature rise:

$$\Delta T_W = \frac{0.0038P}{F} \tag{8}$$

Step 6. Compute temperature rise in heatsink:

$$\Delta T_H = \frac{Pt}{10.6KS} \tag{9}$$

($K = 0.9$ for copper, 0.5 for aluminum)

Step 7. Compute temperature of heatsink near stud:

$$T_H = T_W + \frac{\Delta T_W}{2} + \theta + \Delta T_H \tag{10}$$

Check that T_H as found above in Equation 10 is not greater than T_H found in Equation 2, Step 2.

Design Example

The design procedure is illustrated by use of the heatsink shown in Figures 1 and 2.

Step 1. From the G. E. specification sheet for the 2N1911 SCR

$T_J = 125°C$

$T_S = 63°C$ (for 110 a rms)

$R_{T(J-S)} = 0.4°C/w$

$P = \frac{125-63}{0.4} = 155$ w

(measured $P = 100$ w).

LAWRENCE RADIATION LABORATORY - UNIVERSITY OF CALIFORNIA

ENGINEERING NOTE

SUBJECT

FILE NO.

NAME

DATE

PAGE

FIGURE 7

EQUIVALENT LENGTH OF A SQUARE ELBOW FOR USE IN PRESSURE DROP CALCULATIONS

ADAPTED FROM: WARREN H. GIEDT, PRINCIPLES OF ENGINEERING HEAT TRANSFER, D. VAN NOSTRAND CO. NEW YORK, P. 110, 1958

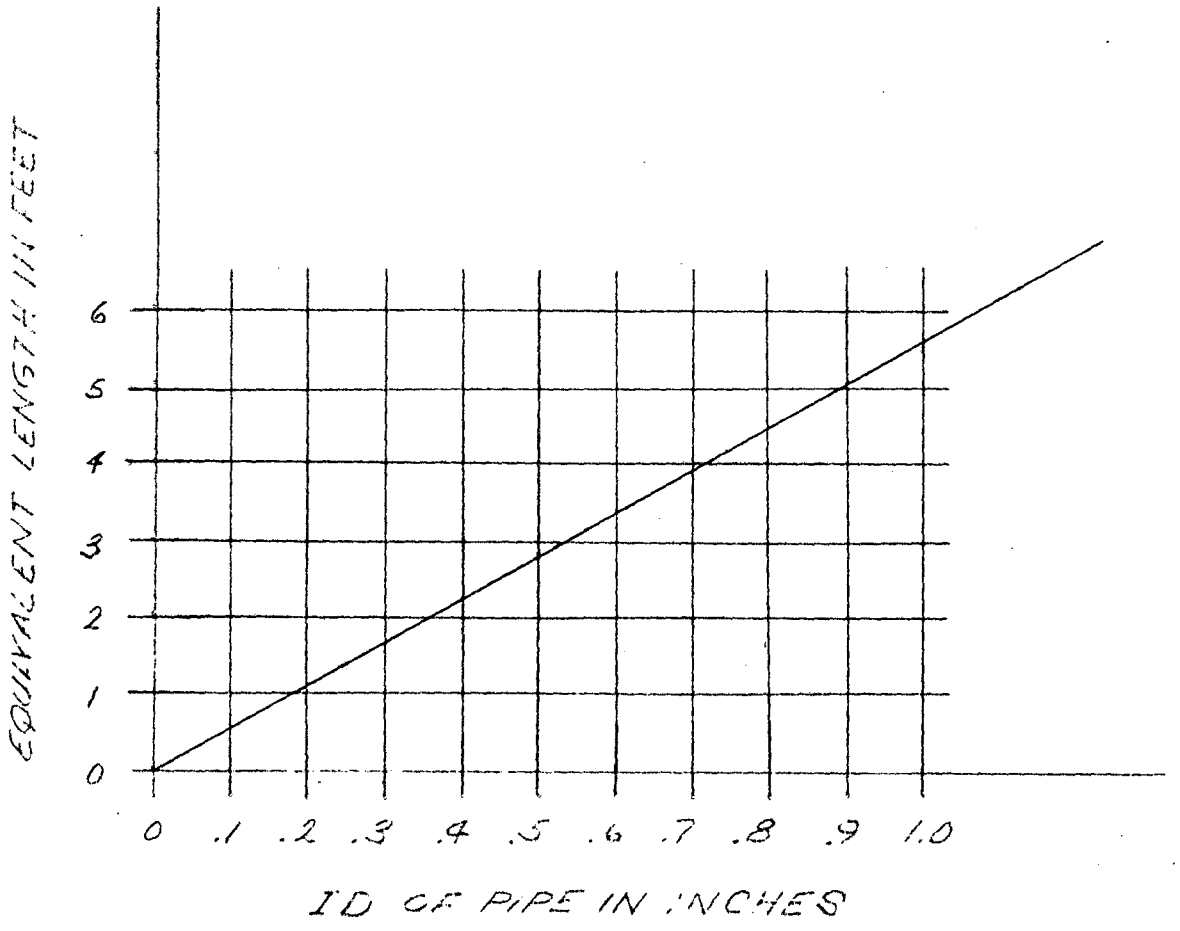

Step 2. Assume $R_{T(S-H)} = 0.1°C/w$

$$T_H = 63-(0.1)(155) = 47.5°C$$

For greater semi-conductor reliability, try for $T_H = 35°C$. This will result in a junction temperature of 122.5°C.

Step 3.

(a) Assume $T_W = 25°C$

then $\theta = (0.8)(35-25) = 8°C$.

(b) Choose 1/4-in-ID water passages

$a \approx (3.14)^2(1/4)(1) = 2.46 \text{ in}^2$

(actual $a = (3.14)(1/4)(4) = 3.14 \text{ in}^2$).

(c) $M = \frac{155}{2.46} = 63 \text{ w/in}^2$

(actual $M = \frac{155}{3.14} = 49.5 \text{ w/in}^2$).

(d) V = 8 ft/sec (read for Design Data Sheet 38)

(actual V is slightly less than 8 ft/sec from Design Data Sheet 38).

(e) $F = \frac{(3.13)(8)(3.14)(1/4)^2}{4} = 1.23 \text{ gal/min.}$

Step 4.

(a) From Figure 7, $L_e = (2)(1.3) = 2.6$ ft

From Figure 1, $L_W = 4$ in

Pick $L_h = 68$ in

$$L = 2(2.6 + \frac{4}{12}) + \frac{68}{12} = 11.5 \text{ ft}$$

(L is for 2 heatsinks)

(b) From Design Data Sheet 10, $\Delta p = \frac{140}{100}(11.5)(0.433) = 7$ psi

(measured pressure drop was 9 psi at 1 gal/min).

Step 5.

$$\Delta T_W = \frac{(0.0038)(155)}{1.23} = 0.48°C \text{ per heatsink}$$

(measured ΔT_W was 0.5°C for each heatsink at 1 gal/min).

Step 6.

$$\Delta T_h = \frac{(155)(1/4)}{(10.6)(0.9)(1/4)(4)} = 4.06°C$$

Step 7.

$$T_H = 25 + \frac{0.48}{2} + 8 + 4.06 = 37.4°C$$

This is fairly close to T_H found in Step 2 (measured T_H was 35°C at 1 gal/min).

APPENDIX

WATER FLOW IN SMALL SMOOTH TUBES, SUCH AS BRASS AND COPPER
Data taken from Williams and Hazen, "Hydraulic Tables"

DESIGN DATA NO. 10
R. Peters
1-17-47
Redrawn: 7-25-51

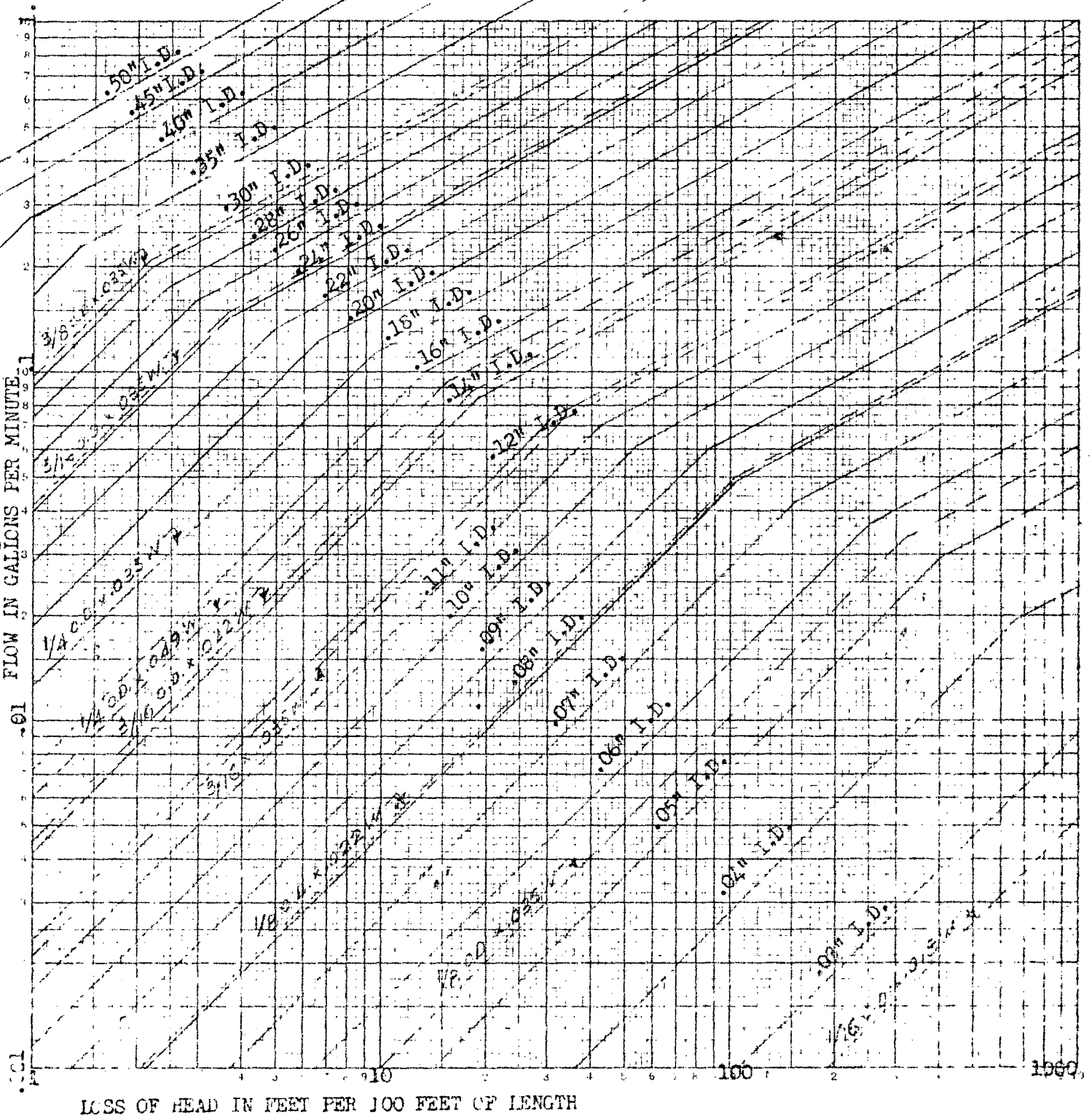

LOSS OF HEAD IN FEET PER 100 FEET OF LENGTH

Loss in P.S.I. = Loss in Feet x .433

U.C.R.L.
DESIGN DATA No. 38

Page 1 of 1

T. Scalise
9-25-50

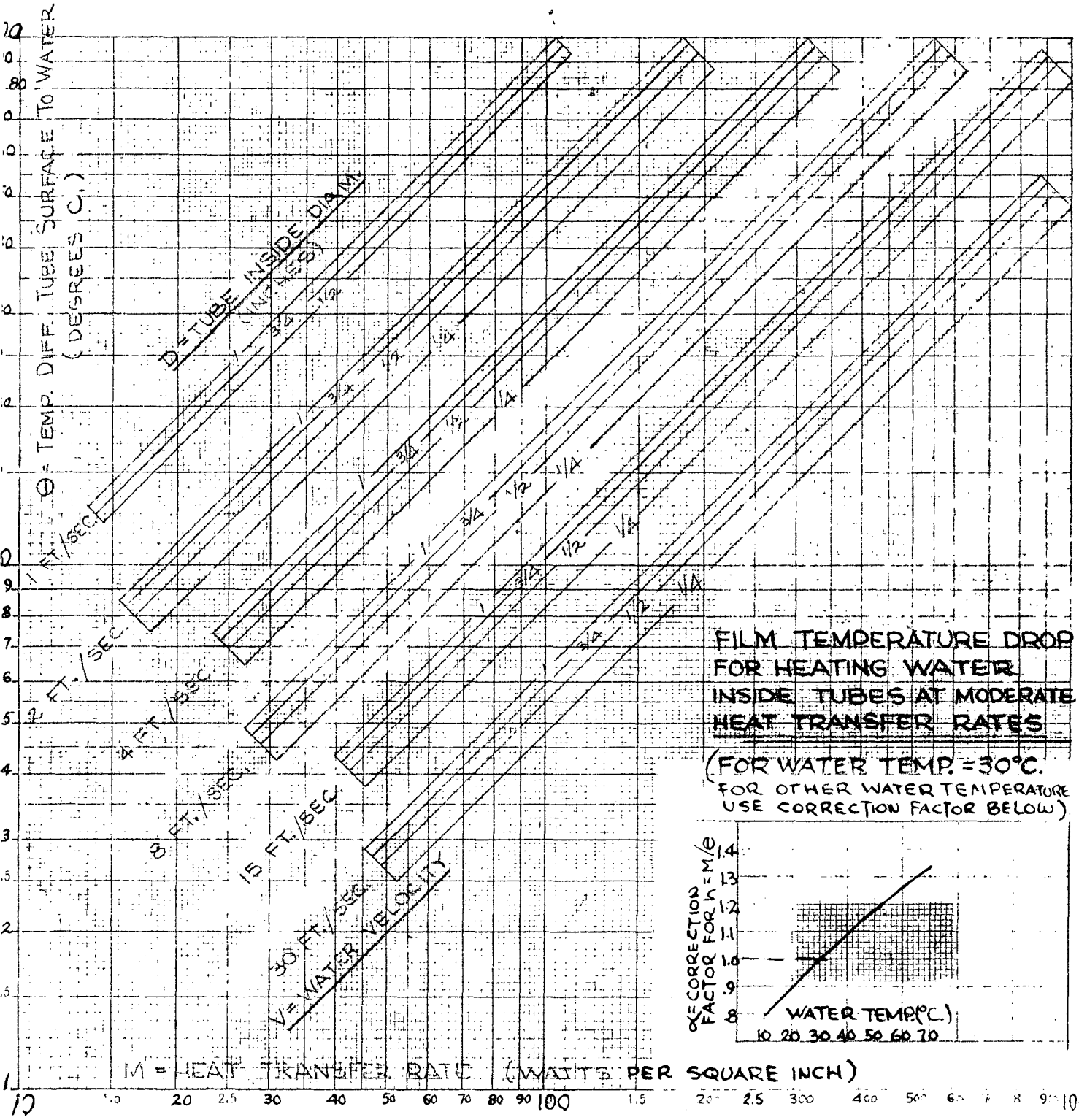

DERIVED FROM McADAM'S HEAT TRANSMISSION [illegible]

$$h = \frac{V}{\sqrt{D}} - 1.07\alpha \frac{V^{.8}}{D^{.2}}$$

(SYMBOL [illegible] ABOVE [illegible])

FOOTNOTE AND REFERENCES

* Work done under the auspices of the U. S. Atomic Energy Commission.

1. F. W. Gutzwiller, "Heatsinks for Stud-Mounted Semiconductors," Application Note 200.12, General Electric Co., Recifier Components Dept., Auburn, New York, p. 11.

2. J. T. Lavrischeff, "Mounting Considerations for Semiconductors," Lawrence Radiation Laboratory Report UCID-1960, Feb. 1961.