UCRL-11089
c.2

University of California

Ernest O. Lawrence Radiation Laboratory

LONGITUDINAL RESISTIVE INSTABILITIES OF INTENSE COASTING BEAMS IN PARTICLE ACCELERATORS

TWO-WEEK LOAN COPY

This is a Library Circulating Copy which may be borrowed for two weeks. For a personal retention copy, call Tech. Info. Division, Ext. 5545

Berkeley, California

UCRL-11089 c.2

Rept. sub. for meeting at the
Informal Conference at MURA,
October, 1963.

UCRL-11089

UNIVERSITY OF CALIFORNIA

Lawrence Radiation Laboratory
Berkeley, California

AEC Contract No. W-7405-eng-48

LONGITUDINAL RESISTIVE INSTABILITIES OF INTENSE COASTING BEAMS IN PARTICLE ACCELERATORS

V. Kelvin Neil and Andrew M. Sessler

October 23, 1963

LONGITUDINAL RESISTIVE INSTABILITIES OF INTENSE COASTING BEAMS IN PARTICLE ACCELERATORS*

V. Kelvin Neil and Andrew M. Sessler

Lawrence Radiation Laboratory, University of California
Livermore and Berkeley, California

October 23, 1963

ABSTRACT

The longitudinal electromagnetic interaction of an intense coasting beam with itself, including the effect of a resistive vacuum tank, is investigated theoretically. It is shown that even in the range where the particle frequency is an increasing function of particle energy, the beam can be longitudinally unstable due to the resistivity of the vacuum tank walls. In the absence of frequency spread in the unperturbed beam the beam is shown to be always unstable against longitudinal bunching with a growth rate which depends upon $(N/\sigma)^{1/2}$, where N is the number of particles in the beam and σ is the conductivity of the surface material. By means of the Vlasov equation, a criterion for stability of the beam is obtained; and shown in the limit of high-conductivity walls to involve the frequency spread in the unperturbed beam, the number of particles N, the beam energy, geometrical properties of the accelerator, but not the conductivity σ. A numerical example is presented which indicates that certain observations of beam behavior in the MURA 40 MeV electron accelerator may be related to the phenomena investigated here.

* Research supported by the U. S. Atomic Energy Commission.

I. INTRODUCTION

That an electron stream with a small density fluctuation along the (longitudinal) stream direction may have the fluctuation amplified when passing through a pipe which has resistance in its walls was first pointed out by Birdsall. The concept has been incorporated into the resistive wall amplifier and a general discussion of "slow wave" amplifiers has been given by Pierce,[1] while Birdsall and Whinnery[2] have given a general analysis of such structures.

The purpose of this work is to extend the theory as developed for the analysis of traveling wave tubes to an analysis of longitudinal resistive instabilities of intense high velocity beams in particle accelerators. In particular, the theory presented here includes, through the Vlasov equation, details of the particle dynamics (as contrasted with the hydrodynamic approximation of Ref. 2) which are vital to obtaining the criterion for stability. The work described here is also an extension of previous studies of longitudinal instabilities[3,4,5] and draws heavily upon the notation of Ref. 4. Our analysis was stimulated by experiments with the MURA 40 MeV electron accelerator which show a pronounced longitudinal bunching of the beam near the injection energy.[6] Although the observed instability above the transition energy is well understood, and had even been predicted theoretically;[4] the observations of bunching below the transition energy came initially as a surprise. The analysis presented here culminates in a criterion for stability and a growth rate in the absence of stability; both of which seem to be in adequate agreement with the observations at MURA. At the least, the theory suggests further

experiments suitable for determining whether the observed phenomena is in fact a resistive instability; and in any case, the theory suggests design requirements for any particle accelerator developed for the production of very intense beams.

The analysis presented is a linear perturbative treatment about a uniform (coasting) beam in the azimuthal (θ) direction. A perturbation of the beam density in the form of a periodic wave in θ and t is assumed and the electric and magnetic fields arising from the perturbation are then computed in Section II under two different situations. In Section III the formalism of Refs. 4 and 5 is employed to reduce the effect of the fields upon the particle motion to a dispersion relation which determines the frequency of the assumed wave. Section IV is devoted to a discussion of the dispersion relation; Section V contains a numerical example, namely the application of the general results to the MURA 40 MeV electron accelerator.

The analysis shows that the resistive instability leads to the longitudinal bunching of an initially uniform beam of (one velocity) particles with a growth rate which is proportional to $\sigma^{-1/2}$ where σ is the conductivity of the surface material [Eq. (4.7)]. An effective stabilizing mechanism is the spread in particle circulation frequency which is caused primarily by a spread of the particle energy in the beam. It is shown that since the resistive fields are very small compared to the non-resistive fields the criterion for stability is a sensitive function of the assumed frequency spread in the unperturbed beam. For a realistic particle energy distribution and

for surfaces of high conductivity, a condition for stability is obtained which is independent of the conductivity [Eq. (4.20)].

It should be noted that although the analysis is restricted to a uniform--or coasting--beam, it is expected that a very analogous phenomena will occur even if the unperturbed beam is azimuthally bunched by an rf cavity. Some support is given to this argument by the fact that although the previous theoretical work on longitudinal instabilities[3,4,5] was also restricted to coasting beams, the phenomenon has been observed[7] in bunched beams in essentially the same form as in the uniform case.

Finally, it must be pointed out that the work of Ref. 5 is incomplete in that the possibility of the instability discussed here was overlooked. The work of Ref. 5 is correct, in so far as it goes, but must be augmented with the analysis of this paper to give a complete description of the phenomena possible.

II. SOLUTION OF MAXWELL'S EQUATIONS

In this section we shall obtain the electric and magnetic fields associated with a perturbed density which varies as $\exp[i(n\theta - \omega t)]$, where because of the periodicity requirement n must be an integer. Incorporating the resistance of the vacuum tank wall is sufficiently complicated that we treat two special cases. The first is a beam of circular cross section centrally located in a tank of circular cross section where the longitudinal wavelength $2\pi R/n$ is assumed large compared to the tank minor radius. In this case simple analytic formulas may be obtained for the fields. The second case is a rectangular cross-section tank in which the beam is assumed to be located in the median plane of the cavity and to have finite extent horizontally, but be infinitely narrow in the vertical direction (a ribbon beam). In this case resistance is incorporated in the top and bottom tank walls, but the side walls are assumed to be perfectly conducting. In both cases the curvature of the vacuum tank is ignored, as this is a good approximation.

1. Circular Cross-Section Vacuum Tank

We consider a beam moving along the (z-direction) axis of a pipe of radius a. Let the beam have uniform density out to radius b, so we have the situation illustrated in Fig. 1. The perturbation is assumed to vary as $\exp[i(kz - \omega t)]$ so when we relate this calculation to an actual accelerator we will replace k by (n/R) and z by $R\theta$. Thus we have assumed current and charge:

$$\rho = \begin{cases} \rho_0 \, e^{i(kz-\omega t)} & r < b , \\ 0 & r > b , \end{cases}$$

$$j_z = \begin{cases} \rho_0 \, \frac{\omega}{k} \, e^{i(kz-\omega t)} & r < b , \\ 0 & r > b , \end{cases} \tag{2.1}$$

which can easily be seen to satisfy the equation of continuity and correspond to a wave velocity in the z direction of magnitude ω/k . Corresponding to this charge and current distribution will be the fields:

$$\underset{\sim}{E} = [E_r(r) \, \hat{\underset{\sim}{r}} + E_z(r) \, \hat{\underset{\sim}{z}}] \, e^{i(kz-\omega t)}$$

$$\underset{\sim}{H} = H_\phi(r) \, \hat{\underset{\sim}{\phi}} \, e^{i(kz-\omega t)} , \tag{2.2}$$

which upon substitution into Maxwell's equations yields the coupled equations

$$\frac{1}{r} \frac{\partial}{\partial r} (r \, E_r) + i \, k \, E_z = \begin{cases} 4\pi \, \rho_0 , & r < b \\ 0 , & r > b \end{cases}$$

$$\frac{1}{r} \frac{\partial}{\partial r} (r \, H_\phi) + \frac{i\omega}{c} E_z = \begin{cases} \frac{4\pi}{c} \, \frac{\omega}{k} \, \rho_0 , & r < b \\ 0 , & r > b \end{cases}$$

$$-ik \, H_\phi + \frac{i\omega}{c} E_r = 0$$

$$ik \, E_r - \frac{\partial E_z}{\partial r} - \frac{i\omega}{c} H_\phi = 0 , \tag{2.3}$$

where Gaussian units have been employed. It is easy to eliminate two of the fields and obtain a Bessel equation for the remaining fields. One of the first two equations of Eq. (2.3) may be ignored since it follows from the other when the equation of continuity is employed.

The boundary conditions are that at $r = b$ all of the fields are continuous, while at $r = a$ the resistance in the walls implies

$$E_z = -(1 - i)\mathcal{R} H_\phi ; \tag{2.4}$$

where the surface is characterized by $\mathcal{R} = (\omega/8\pi\sigma)^{1/2}$, with σ the conductivity of the surface in $\sec^{-1}$. Thus the general solution to Eqs. (2.3) and (2.4) may be readily exhibited in terms of Bessel functions of zero and first order. If we are willing to limit ourselves to the case in which $(ka)^2 \ll 1$ (leaving the more general case to the next section, where the formulas are already encumbered by the more complicated geometric situation), we may expand the solutions for small values of r to obtain the forms

$$E_r = \begin{cases} 2\pi \rho_0 r + A_1 r , & r < b \\ \dfrac{2\pi \rho_0 b^2}{r} + A_1 r , & r > b \end{cases}$$

$$H_\phi = \beta_w E_r$$

$$E_z = \begin{cases} ik(1 - \beta_w^2)\left[\pi \rho_0 r^2 + \frac{1}{2} A_1 r^2\right] + \dfrac{2iA_1}{k} , & r < b \\ ik(1 - \beta_w^2)\left[2\pi \rho_0 b^2 \log r + \dfrac{A_1 r^2}{2} \right. \\ \qquad \left. + \pi\rho_0 b^2 - 2\pi \rho_0 b^2 \log b\right] + \dfrac{2iA_1}{k} , & r > b , \end{cases} \tag{2.5}$$

where $\beta_w = \omega/kc$ is the phase velocity of the wave in units of c. In Eqs. (2.5) we have satisfied all of the equations except the wall boundary condition Eq. (2.4) which now may be invoked to determine the constant A_1. In this way, for $(ka) \ll 1$ and $\mathcal{R} \ll 1$ we obtain as the leading terms in the longitudinal electric field for $r < b$:

$$E_z(r) = \frac{2\pi\ \rho_0 b^2}{a}\left(1 - \beta_w^2\right)\left[-i(ka)\left[\frac{1}{2} + \log a/b\right] + \frac{i(ka)}{2}\left(\frac{r}{b}\right)^2 - \mathcal{R}\,\beta_w\left(1 - \beta_w^2\right)^{-1}\right] . \tag{2.6}$$

In Section III we will need the azimuthal electric field to which the particles are subject, on the average. This involves some average of E_z over the beam cross section, but since the precise average required is not clear (in view of the approximations inserted in Eq. (2.1)) and because E_z varies only slowly across the beam we will continue in the spirit of Ref. 4 and employ $E_z\ (r=0)$.

Introducing the perturbed charge per unit length λ by

$$\lambda = \pi\ \rho_0\ b^2\ e^{i(kz-\omega t)} , \tag{2.7}$$

we have for the total field in the z direction:

$$\left(\underset{\sim}{E}\cdot\hat{\underset{\sim}{z}}\right)_{r=0} = -\frac{\partial\lambda}{\partial z}\left(1 - \beta_w^2\right)(1 + 2\log a/b) - \frac{2\mathcal{R}\beta_w}{a}\lambda . \tag{2.8}$$

It is interesting to note that the out-of-phase contribution decreases like $\gamma_w^{-2} = 1 - \beta_w^2$, involves a geometric factor, and is proportional

to the variation of charge in the z direction--results all familiar from previous studies.[4] The (new) in-phase component only exists in virtue of the resistivity and furthermore does not vanish as $k \to 0$ or as $\beta_w \to 1$. In all practical applications it appears that $\mathcal{R}$ is sufficiently small that the in-phase component is small compared to the (usual) out-of-phase component.

In a notation which will be convenient for subsequent analysis we have, finally:

$$\langle RE_\theta \rangle = -in\lambda(1 - \beta_w^2)(1 + 2 \log a/b) - 2\,\mathcal{R}\,\beta_w\,\lambda\,(\tfrac{R}{a}) \tag{2.9}$$

where n is the number of waves about the circumference and the perturbed charge per unit azimuthal length λ has been written in the form

$$\lambda = \lambda_1 \, e^{i(n\theta - \omega t)} . \tag{2.10}$$

2. Rectangular Cross-Section Vacuum Tank

In this section we consider an infinitely thin beam in the vertical direction, located in the median plane of a rectangular duct of height H and width W, as illustrated in Fig. 2. The beam charge distribution in the x direction is assumed to be unaltered by the longitudinal bunching and determined by initial conditions so the perturbed surface charge distribution $\sigma(x,y,t)$ is taken to be of the form

$$\sigma(x,y,t) = \lambda_1 \sigma(x)\, e^{i(ky-\omega t)} , \tag{2.11}$$

with $\sigma(x)$ normalized so that its integral over x is unity. Conservation of charge implies a surface current distribution $j_y(x,y,t)$ just equal to (ω/k) times $\sigma(x,y,t)$.

The boundary conditions for the electric and magnetic fields are taken to be perfectly conducting side walls so that the tangential electric and normal magnetic fields vanish at $x = 0$ and $x = W$. On the top surface $(z = H/2)$ we require

$$E_x = (1 - i)\,\mathcal{R}\,B_y$$
$$E_y = -(1 - i)\,\mathcal{R}\,B_x\,, \tag{2.12a}$$

and on the bottom surface $(z = -H/2)$ we require

$$E_x = -(1 - i)\,\mathcal{R}\,B_y$$
$$E_y = (1 - i)\,\mathcal{R}\,B_x\,, \tag{2.12b}$$

where $\mathcal{R}$ has been defined following Eq. (2.4).

Expressions for the fields are most easily written as two sets, transverse magnetic (TM) and transverse electric (TE), with transverse referring to the z direction. Each set independently satisfies Maxwell's equations for free space everywhere inside the tank except at $z = 0$, and also satisfy Eqs. (2.12a) and (2.12b). The desired expressions are as follows:

$$\bar{E}_{TM} = e^{i(ky-\omega t)} \sum_s E_s \left\{ \left[\mp \sinh \nu(z \mp \frac{H}{2}) - \frac{i\omega}{\nu c}(1-i)\mathcal{R} \cosh \nu(z \mp \frac{H}{2}) \right] \right.$$

$$\times \left[\eta \cos \eta x \hat{\underset{\sim}{i}} + i k \sin \eta x \hat{\underset{\sim}{j}} \right]$$

$$\left. + \left[\mp \cosh \nu(z \mp \frac{H}{2}) - \frac{i\omega}{\nu c}(1-i)\mathcal{R} \sinh \nu(z \mp \frac{H}{2}) \right] \frac{\ell^2}{\nu} \sin \eta x \hat{\underset{\sim}{k}} \right\}, \tag{2.13}$$

$$\bar{B}_{TM} = e^{i(ky-\omega t)} \sum_s \left(\frac{i\omega}{\nu c} \right) E_s \left[\mp \cosh \nu(z \mp \frac{H}{2}) \right.$$

$$\left. - \frac{i\omega}{\nu c}(1-i)\mathcal{R} \sinh \nu(z \mp \frac{H}{2}) \right]$$

$$\times \left[- ik \sin \eta x \hat{\underset{\sim}{i}} + \eta \cos \eta x \hat{\underset{\sim}{j}} \right], \tag{2.14}$$

$$\bar{E}_{TE} = e^{i(ky-\omega t)} \sum_s \left(\frac{i\omega}{\nu c} \right) B_s \left[\mp \sinh \nu(z \mp \frac{H}{2}) \right.$$

$$\left. + \frac{i\nu c}{\omega}(1-i)\mathcal{R} \cosh \nu(z \mp \frac{H}{2}) \right]$$

$$\times \left[ik \cos \eta z \hat{\underset{\sim}{i}} + \eta \sin \eta z \hat{\underset{\sim}{j}} \right], \tag{2.15}$$

$$\bar{B}_{TE} = e^{i(ky-\omega t)} \sum_s B_s \left\{ \left[\mp \cosh \nu(z \mp \frac{H}{2}) + \frac{i\nu c}{\omega}(1-i)\mathcal{R} \sinh \nu(z \mp \frac{H}{2}) \right] \right.$$

$$\times \left[- \eta \sin \eta x \hat{\underset{\sim}{i}} + i k \cos \eta x \hat{\underset{\sim}{j}} \right]$$

$$\left. + \left[\mp \sinh \nu(z \mp \frac{H}{2}) + \frac{i\nu c}{\omega}(1-i)\mathcal{R} \cosh \nu(z \mp \frac{H}{2}) \right] \frac{\ell^2}{\nu} \cos \eta x \hat{\underset{\sim}{k}} \right\}. \tag{2.16}$$

In these expressions $\eta = s\pi/W$, $\ell^2 = \eta^2 + k^2$, $\nu^2 = \ell^2 - (\omega/c)^2$, and s is an integer which must be summed over. The top and bottom signs apply when $z > 0$ and $z < 0$ respectively. We determine the constants E_s and B_s from the discontinuity conditions at $z = 0$:

$$E_z^+ - E_z^- = 4\pi\sigma(x,y,t) , \tag{2.17a}$$

$$B_x^+ - B_x^- = 4\pi j(x,y,t)/c . \tag{2.17b}$$

Expanding σ in a Fourier sin series in x ,

$$\sigma(x) = \left(\frac{2}{W}\right)\sum_s \sigma_s \sin \eta x , \tag{2.18}$$

we find

$$E_s = -2\pi \lambda_1 \sigma_s \nu/\ell^2 \left[\cosh(\nu H/2) - \frac{i\omega}{\nu c}(1 - i)\mathcal{R}\sinh(\nu H/2)\right] , \tag{2.19}$$

and

$$B_s = 2\pi \lambda_1 \sigma_s \beta_w \eta/\ell^2 \left[\cosh(\nu H/2) + \frac{i\nu c}{\omega}(1 - i)\mathcal{R}\sinh(\nu H/2)\right] , \tag{2.20}$$

with $\beta_w = (\omega/kc)$.

The only field component that enters into the Vlasov equation in Section III is $E_y(z=0)$. After some simplification we have, to first order in $\mathcal{R}$,

$$E_y(z=0) = -2\pi i \lambda_1 e^{i(ky-\omega t)} \sum_s \sigma_s \sin \eta x$$
$$\times \left[\frac{k}{\nu}(1 - \beta_w^2)\tanh(\nu H/2) - i(1 - i)\mathcal{R}\beta_w \operatorname{sech}^2(\nu H/2)\right] . \tag{2.21}$$

We may ignore the (small) term proportional to $(-i)^2$. If the perturbation wavelength is long compared to the transverse dimensions of the vacuum tank then $\eta \gg k$ and $\nu \approx \ell \approx \eta$.

In Section III we will need the average field which the particles feel in the azimthal direction. This is obtained from $E_y(z=0)$ by averaging over x :

$$\langle E_\theta \rangle = \frac{\int \sigma(x)\, E_y(x,y,z=0)dx}{\int \sigma(x)\, dx} , \tag{2.22}$$

or

$$\langle E_\theta \rangle = \int dx \sum_{s'} \sigma_{s'} \sin \eta x \; E_y \; . \tag{2.23}$$

We thus obtain

$$\langle R\, E_\theta \rangle = - \frac{4\pi i \lambda_1 R\, e^{i(n\theta-\omega t)}}{W} \sum_s \sigma_s^2 \left\{ \frac{k}{\nu} (1 - \beta_w^2) \tanh \frac{\nu H}{2} - i \mathcal{R} \beta_w \operatorname{sech}^2 \frac{\nu H}{2} \right\} . \tag{2.24}$$

This general expression may prove useful in some applications. We have evaluated it numerically for a particular choice of $\sigma(x)$ which has two parameters, namely a beam of width Δ with center z_0 as indicated in Fig. 2. The functional form chosen was

$$\sigma(x) = \begin{cases} \frac{\pi}{2\Delta} \cos \frac{\pi}{\Delta}(x - z_0) , & |x - z_0| < \Delta/2 \\ 0 , & |x - z_0| \geq \Delta/2 , \end{cases} \tag{2.25}$$

and a 7094 Fortran Program[8] developed to evaluate the quantities:

$$\text{Relong} = \sum_s \sigma_s^2 (1 - \beta_w^2) \frac{k}{\nu} \cdot \tanh \frac{\nu H}{2}$$

$$\text{Imlong} = \sum_s \sigma_s^2 \beta_w \operatorname{sech}^2 \frac{\nu H}{2} . \tag{2.26}$$

In terms of these:

$$\langle R E_\theta \rangle = -4\pi i \lambda \left(\frac{R}{W} \right) \left[\text{Relong} - i \mathcal{R} \text{Imlong} \right] . \tag{2.27}$$

III. THE DISPERSION RELATION

The dynamics of the problem is incorporated in the Vlasov equation which we solve in cylindrical coordinates incorporating the formalism of Refs. 4 and 5, and in particular the canonical variables θ and w for the azimuthal motion. The quantity $w = 2\pi(p_\theta - p_0)$ where p_θ is the canonical angular momentum and p_0 the mean value of p_θ for the beam. The transverse motion of particles is considered only in so far as it contributes to the transverse dimensions of the beam and to the relation between the circulation frequency of particles and their canonical angular momentum.

The particles distribution function $\psi(w,\theta,t)$ satisfies the one-dimensional equation:[5]

$$\frac{\partial\psi}{\partial t} + \dot{\theta}\frac{\partial\psi}{\partial\theta} + 2\pi\, e \langle R\, E_\theta\rangle \frac{\partial\psi}{\partial w} = 0 , \tag{3.1}$$

where the quantity $\langle R\, E_\theta\rangle$ has been evaluated in Section II. The unperturbed beam is uniform in azimuth and constant in time so it may be described by a distribution function $\psi_0(w)$. We may take a infinitesimal perturbation in the form of waves so that

$$\psi(w,\theta,t) = \psi_0(w) + \psi_1(w)\, e^{i(n\theta-\omega t)} , \tag{3.2}$$

which when inserted into Eq. (3.1), after linearization, yields

$$\psi_1(w) = -\frac{2\pi\, i\, e \langle R\, E_\theta\rangle}{(\omega - n\,\dot{\theta})} \frac{d\psi_0}{dw}\, e^{-i(n\theta-\omega t)} . \tag{3.3}$$

Let us normalize ψ to particles per unit length so that in terms of the total number of particles in the accelerator N ,

$$N = 2\pi R \int \psi_0(w)dw = N \int f_0(w)dw , \tag{3.4}$$

while the perturbed charge density may be related to λ_1 by

$$\lambda_1 = e \int \psi_1(w)dw . \tag{3.5}$$

Thus, combining Eqs. (3.3) and (3.5):

$$\lambda_1 = - 2\pi i e^2 \langle R E_\theta \rangle e^{-i(n\theta-\omega t)} \int \frac{d\psi_0}{dw} \frac{dw}{\omega - n\dot{\theta}} . \tag{3.6}$$

Defining

$$I = \int \frac{df_0}{dw} \frac{dw}{\omega - n\dot{\theta}} , \tag{3.7}$$

and inserting Eq. (2.9), Eq. (2.24), or Eq. (2.27) yields

$$-1 = (U - iV)I , \tag{3.8}$$

where from Eq. (2.9):

$$\begin{aligned} U &= \frac{Ne^2 n}{R} (1 - \beta_w^2)(1 + 2 \log a/b) , \\ V &= \frac{Ne^2 2 \mathcal{R} \beta_w}{a} ; \end{aligned} \tag{3.9a}$$

while from Eq. (2.24):

$$\begin{aligned} U &= \frac{4\pi Ne^2}{W} \sum_s \sigma_s^2 \frac{k}{\nu} (1 - \beta_w^2) \tanh \frac{\nu H}{2} , \\ V &= \frac{4\pi Ne^2}{W} \mathcal{R} \sum_s \sigma_s^2 \beta_w \operatorname{sech}^2 \frac{\nu H}{2} ; \end{aligned} \tag{3.9b}$$

and from Eq. (2.26):

$$U = \frac{4\pi\ Ne^2}{W}\ \text{Relong}\ ,$$

$$V = \frac{4\pi\ Ne^2\,\mathcal{R}}{W}\ \text{Imlong}\ . \tag{3.9c}$$

Although U and V are functions of ω through $\beta_w = \omega/kc$, we shall see below that ω near $n\,\omega_0$ is the region of interest. It is therefore a good approximation (provided the particles are not extremely relativistic) to replace β_w by $\beta_0 = v/c$, where $v = \omega_0 R$ is the mean velocity of particles in the beam and ω_0 is the mean angular frequency. This simplification is strictly true at the stability limit of the negative mass instability, where $\omega = n\,\omega_0$ is a solution to the dispersion equation. There is a further dependence of V on ω through $\mathcal{R} = (\omega/8\pi\sigma)^{1/2}$. This is a weak dependence, and we shall everyplace replace ω by $n\,\omega_0$, thus rendering U and V independent of ω.

The quantities U and V are positive, and for all cases in which we have evaluated them $\mathcal{R}$ is so small that $V \ll U$.

IV. ANALYSIS OF THE DISPERSION RELATION

1. Instability in Absence of Damping

In order to directly demonstrate the resistive instability we first choose $f_0(w) = \delta(w)$ which represents a beam with all particles having the same canonical angular momentum. Since we are only concerned with small deviations in w we may write

$$\dot{\theta} = \omega_0 + k_0 w , \tag{4.1}$$

where ω_0 is the mean angular frequency and k_0 is related to the particle revolution frequency f, which is a function of particle energy E, by

$$k_0 = 2\pi f \frac{df}{dE} . \tag{4.2}$$

Below the transition energy k_0 is positive, while above the transition one is in the region of "negative mass." Evaluating Eq. (3.7), we have from Eq. (3.8)

$$(\omega - n\,\omega_0)^2 = n\,k_0(U - i\,V) . \tag{4.3}$$

If $k_0 < 0$ then even for $V = 0$ (i.e. no resistivity considered) Eq. (4.3) exhibits an instability, namely the negative mass instability. In this regime we need not consider the effect of V since V is always very small compared to U. For $k_0 > 0$ we obtain from Eq. (4.3)

$$\omega = n\,\omega_0 \pm \sqrt{n\,k_0\,U}\;\left(1 - i\,\frac{V}{2U}\right) , \tag{4.4}$$

where the positive sign corresponds to a "fast wave" in which the wave phase velocity β_w is greater than the particle velocity β_0 and the

perturbation is damped.[1,2] The negative sign corresponds to a "slow wave" and it is clear that the disturbance in this case is exponentially growing,[1,2] with an e-folding time τ_0 given by

$$\tau_0 = \frac{2}{V}\left(\frac{U}{n\,k_0}\right)^{1/2} . \tag{4.5}$$

This formula may be evaluated using Eqs. (3.9). For the circular geometry, and with the restiction that $n < R/a$ we have

$$\tau_0 = \frac{a}{\mathcal{R}\,\beta_w}\left[\frac{(1-\beta_w^2)(1+2\log a/b)}{R\,k_0\,Ne^2}\right]^{1/2} \tag{4.6}$$

which is approximately, in terms of β_0 and $\gamma_0 = [1-\beta_0^2]^{1/2}$:

$$\tau_0 = \frac{a}{\beta_0\,\gamma_0\,\mathcal{R}}\left[\frac{1+2\log a/b}{2\pi\,R\,Ne^2\,f\,\frac{df}{dE}}\right]^{1/2} . \tag{4.7}$$

The e-folding time is seen to depend upon the surface conductivity σ as $\sigma^{1/2}$, and upon the number of particles as $N^{-1/2}$. The dependence of τ_0 upon n is only correct for $n < R/a$, and more generally can be obtained from Eqs. (4.5) and (3.9b); it is a weak dependence since n only enters through $\mathcal{R}$ which varies as $n^{1/2}$, so that τ_0 varies as $n^{-1/2}$.

2. Criterion for Stability

A stability criterion will automatically emerge from the dispersion relation if we use an $f_0(w)$ which describes a frequency spread in the unperturbed beam. This is simply the well-known phenomenon of Landau damping. The analysis is complicated by the fact

that $V \ll U$, which means that the growth rate is very small and easily damped by particles riding at the wave velocity β_w . On the other hand the wave velocity is shifted from β_0 by the (relatively) large term U , with the result that the damping is sensitive to the particle distribution at frequencies removed from the central frequency ω_0 . To summarize the detailed results presented in this section, and quite consistent with these physical arguments, we find that the condition for stability is that the frequency shift $(\omega - n\,\omega_0)$ be less than n times the frequency spread in the beam.

To illustrate the problem consider the Lorentz, or resonance, line shape for $f_0(w)$:

$$f_0(w) = \frac{\delta}{\pi(w^2 + \delta^2)} , \tag{4.8}$$

where δ is a measure of the w-spread and hence the frequency spread in the beam. The integral in Eq. (3.7) may be readily performed and one obtains

$$\omega = n\,\omega_0 \pm \sqrt{n\,k_0\,U}\;\left(1 - i\,\frac{V}{2\,U}\right) - i\,n\,k_0\,\delta , \tag{4.9}$$

where Eq. (4.1) has been employed and V assumed much smaller than U . The slow-wave instability is damped out if

$$n\,k_0\,\delta > \frac{1}{\tau_0} , \tag{4.10}$$

which is much less stringent than the correct result to be derived below. The criterion has resulted from the very large tail of the Lorentz line.

To consider other functions we first write the dispersion relation in the form

$$\frac{n\, k_0 (U + i\, V)}{(U^2 + V^2)} = \int \frac{df_0}{dw} \frac{dw}{(w - w_1)} , \tag{4.11}$$

where $w_1 = (\omega - n\, \omega_0)/n\, k_0$. Consider now a Gaussian distribution in w , taking

$$f(w) = \frac{1}{\delta\sqrt{\pi}}\, e^{-w^2/\delta^2} . \tag{4.12}$$

A partial integration and a change of variable from w to $w/\delta \equiv \xi$ puts Eq. (4.11) into the form

$$\frac{n\, k_0\, \delta^2 (U + i\, V)}{(U^2 + V^2)} = \frac{1}{\sqrt{\pi}} \int_{-\infty}^{\infty} \frac{e^{-\xi^2}\, d\xi}{(\xi - \xi_1)^2} \equiv \mathcal{Z}'(\xi_1) . \tag{4.13}$$

The function $\mathcal{Z}'(\xi_1)$ has been investigated numerically by Fried,[9] but asymototic expressions will suffice here. The stability criterion is found bv considering real $\xi_1 = (\omega - n\, \omega_0)/n\, k_0\, \delta$. Since $U \gg V$, $\mathrm{Re}\, \mathcal{Z}' \gg \mathrm{Im}\, \mathcal{Z}'$ is the region of interest, which is the limit of large ξ_1 , where the expansion

$$\mathcal{Z}'(\xi_1) \approx -\frac{2i\, \xi_1}{\sqrt{\pi}}\, e^{-\xi_1^2} + \frac{1}{\xi_1^2} \tag{4.14}$$

is a good approximation. From Eq. (4.13) we have at once that

$$\xi_1^2 \equiv w_1^2/\delta^2 = \frac{U^2 + V^2}{n\, k_0\, \delta^2\, U} \tag{4.15}$$

or, to good approximation:

$$w_1 = -\left(\frac{U}{n\,k_0}\right)^{1/2} . \tag{4.16}$$

The corresponding frequency shift $\omega - n\,\omega_0$ is thus $k_0\,n\,w_1$, or the same as obtained for the two other choices of $f_0(w)$ in Eqs. (4.4) and (4.9).

However, the stability criterion found from Eqs. (4.13) and (4.14) differs drastically from Eq. (4.10). The value of δ necessary for stability is found by solving the transcendental equation

$$\xi_1^{\,3}\; e^{-\xi_1^{\,2}} = \sqrt{\pi}\; V/2U , \tag{4.17}$$

where we have used Eq. (4.15) in the left side of Eq. (4.13). We will not pursue this criterion further, but merely note that the value of δ necessary for stability depends <u>logarithmically</u> on V, not directly as in Eq. (4.10). For numerical computations Eq. (4.17) can prove extremely useful.

Consider now, a distribution function $f_0(w)$ which has non-zero values for only a finite range of w. It is easy to see that for such (a physically realistic) function it is impossible to satisfy the dispersion relation with <u>real ω</u> if w_1 lies outside the range in which f_0 is non-zero. This can be seen by writing Eq. (4.11) in the form

$$\frac{n\,k_0}{U^2}\,(U + i\,V) = \mathcal{P}\int \frac{df_0}{dw}\,\frac{dw}{(w - w_1)} + i\,\pi\,\frac{df_0}{dw}\bigg|_{w=w_1} , \tag{4.18}$$

where $\mathcal{P}$ indicates the Cauchy principle part. The equation cannot be satisfied by a real value of w_1 if $\left.\frac{df_0}{dw}\right|_{w=w_1}$ is zero. Furthermore, it can be shown that any w_1 having a real part outside the range of non-zero $f_0(w)$ has an imaginary part with a sign corresponding to an instability. The value of $\mathrm{Re}\, w_1$ has been seen to be insensitive to the form of $f_0(w)$, so we can deduce a necessary condition for stability, namely the range of $f_0(w)$ must include w_1. Because V is so small compared to U this necessary condition is a very good approximation to a sufficient condition. Quantitatively we have the frequency spread in the beam $\Delta\omega_s \approx 2k_0\delta$ and so

$$n\,\Delta\omega_s > 2(n\,k_0\,U)^{1/2} \tag{4.19}$$

is the condition for stability. Evaluating this for the case of circular geometry, with the restriction that $n < R/a$ we have from Eqs. (3.9a):

$$\Delta\omega_s > 2\left[\frac{2\pi\, f\, \frac{df}{dE}\, Ne^2}{R\,\gamma_0^{\,2}}\,(1 + 2\log a/b)\right]^{1/2}, \tag{4.20}$$

which is algebraically just the criterion for the absence of the negative mass instability (but there, of course, df/dE is negative and its absolute value appears in the formula).[4] This last result has the geometric factor appropriate to the circular geometry; and is independent of n, which result is only valid for $n < R/a$ (The more general case can be handled employing Eqs. (4.19) and (3.9b).); and is seen to be independent of the surface resitivity σ, in this limit of high conductivity surfaces.

It should be noted that Eq. (4.20) may impose more severe design requirements on a high intensity accelerator than those necessary to circumvent the negative mass instability. This is because in the negative mass instability the energy must be above transition where $\left| \frac{df}{dE} \right|$ is usually small and γ_0 may be large, but Eq. (4.20) must be applied near injection in an AGS. The absence of any observed effect in present generation machines--in contrast to the observed negative mass instability in Saturne, the Cosmotron, and the Bevatron[7]--must be laid to the rather large energy spread from the linac injectors (in comparison to the amount of injected current).

V. NUMERICAL EXAMPLE

As a numerical example we take the MURA 40 MeV electron accelerator with parameters as listed in Tables I and II. We assume the conductivity of the walls is that of aluminium, namely $\sigma = 3 \times 10^{17}\ \mathrm{sec}^{-1}$. In Table III one can find the result of numerical calculations for U and V, as well as a comparison with the analytic formulas of Eq. (3.9a). The agreement is seen to be excellent, although the geometry is very removed from a circular situation and n is not much less than R/a. Table IV gives results for the growth time in the absence of frequency spread τ_0, and for the frequency spread required for stability $\Delta\omega_s$. In Table V, N is taken at two values bracketing the experimental range and $\Delta\omega_s$ is expressed in terms of a requisite energy spread ΔE_s on the assumption that the frequency spread is caused solely by an energy spread. The numbers are in semi-quantitative agreement with observation, with the ΔE_s being closer to observations than the τ_0.[6] It is realized that the growth time τ_0 is a function of the resistivity of the walls and could be considerably reduced if the effective resistivity of the walls is higher in the accelerator, than the nominal value (for aluminium) which was used in these theoretical calculations.

ACKNOWLEDGMENTS

The authors wish to thank Mr. Ed Rowe, Dr. Cy Curtis, and Dr. Fred Mills of MURA for stimulating discussions as well as detailed descriptions of their experimental results. They are endebted to Mrs. Barbara Steinberg of the Lawrence Radiation Laboratory for assistance with numerical computations.

TABLE I. Geometrical parameters employed in the numerical example approximating conditions in the MURA 40 MeV electron accelerator. The dimensions are defined in Fig. 2.

Case	n	R (cm)	H (cm)	W (cm)	z_0 (cm)	Δ (cm)
A	1	125	5.4	100	15	1.0
B	10	125	5.4	100	15	1.0
C	10	140	5.4	100	30	1.0
D	10	140	5.4	100	30	2.0

TABLE II. Beam parameters employed in the numerical example. The quantity K corresponds to a field index parameter of 9.3.

Case	β_0	γ_0	ω_0 cm/sec	$\kappa \equiv \frac{E}{f}\frac{df}{dE}$	k_0 sec^{-2} erg^{-1}
A	0.5528	1.2	1.33×10^8	1.96	0.575×10^{22}
B	0.5528	1.2	1.33×10^8	1.96	0.575×10^{22}
C	0.8660	2.0	1.86×10^8	2.04	0.702×10^{22}
D	0.8660	2.0	1.86×10^8	2.04	0.702×10^{22}

TABLE III. Values of the quantities U and V, as defined in Eq. (3.9). The conductivity, in this example, is taken to be that of aluminium; namely, $\sigma = 3 \times 10^{17}\ \mathrm{sec}^{-1}$. It can be seen that the analytic formula of Eq. (3.9a) is an exceedingly good approximation--in this example, at least--to the numerical computations.

	Employing Eq. (3.9a)		Employing Eq. (3.9c)	
Case	$\frac{U}{N} \times 10^{20}$(ergs)	$\frac{V}{N} \times 10^{26}$(ergs)	$\frac{U}{N} \times 10^{20}$(ergs)	$\frac{V}{N} \times 10^{26}$(ergs)
A	0.561	39.6	0.774	39.5
B	5.61	125	7.69	121
C	2.02	232	2.47	229
D	1.38	232	1.91	226

TABLE IV. Growth time and spreads required for stability in the numerical example. The quantity τ_0 is computed employing Eq. (4.5), while $\Delta\omega_s$ is evaluated employing Eq. (4.19); in both cases using the last two columns of Table III. The quantity ΔE_s is the energy spread in the beam required to give the frequency spread $\Delta\omega_s$ (and hence stability), under the assumption that the frequency spread arises solely from energy spread.

Case	$N^{1/2}\tau_0$ (sec)	$\frac{\Delta\omega_s}{N^{1/2}}$ (sec^{-1})	$\frac{\Delta E_s}{N^{1/2}} \times 10^6$ (kV)
A	5.9×10^3	13.5	30
B	1.9×10^3	13.0	30
C	5.2×10^2	8.4	22
D	4.7×10^2	7.4	19

TABLE V. Growth times in the absence of energy spread and energy spread required for stability for two different values of the total number of particles in an example approximating conditions in the MURA 40 MeV electron accelerator.

	$N = 10^8$		$N = 10^{10}$	
Case	τ_0 (msec)	ΔE_s (kV)	τ_0 (msec)	ΔE_s (kV)
A	590	0.3	59	3.0
B	190	0.3	19	3.0
C	52	0.22	5.2	2.2
D	47	0.19	4.7	1.9

REFERENCES

1. J. R. Pierce, Bell System Tech. J. 30, 626 (1951).

2. C. K. Birdsall and J. R. Whinnery, J. Appl. Phys. 24, 314 (1953).

3. A. A. Kolomensky and A. N. Lebedev, Proceedings of the CERN Symposium on High Energy Accelerators, Geneva, 1959 (CERN, Geneva, 1959), p.115.

4. C. E. Nielsen, A. M. Sessler, and K. R. Symon, Proceedings of the CERN Symposium on High Energy Accelerators, Geneva, 1959 (CERN, Geneva, 1959), p. 239.

5. L. J. Laslett, V. K. Neil, and A. M. Sessler, Rev. Sci. Instr. 32, 276 (1961).

6. F. E. Mills, Beam Experiments with the MURA 50 MeV FFAG Accelerator, Abstract of paper presented at the International Conference on High Energy Accelerators, Dubna, U.S.S.R., 1963 (unpublished).

7. H. Bruck et al., Proceedings of the Brookhaven 1961 International Conference on High Energy Accelerators, Brookhaven National Laboratory, 1961, p. 175;

   M. Q. Barton and C. E. Nielsen, Proceedings of the Brookhaven 1961 International Conference on High Energy Accelerators, Brookhaven National Laboratory, 1961, p. 163;

   M. Q. Barton, Coherent Effects in the Cosmotron, Abstract of paper presented at the International Conference on High Energy Accelerators, Dubna, U.S.S.R., 1963 (unpublished);

   G. R. Lambertson, High Intensity Phenomena at the Bevatron, Abstract of paper presented at the International Conference on High Energy Accelerators, Dubna, U.S.S.R. (unpublished).

8. IBM 7094 FORTRAN Program "Mess", Lawrence Radiation Laboratory, University of California, 1963 (unpublished).

9. B. D. Fried and S. D. Conte, "The Plasma Dispersion Function" (1961).

FIGURE CAPTIONS

Figure 1. Geometry of beam and tank for the circular cross-section case.

Figure 2. Geometry of beam and tank for the rectangular cross-section case.

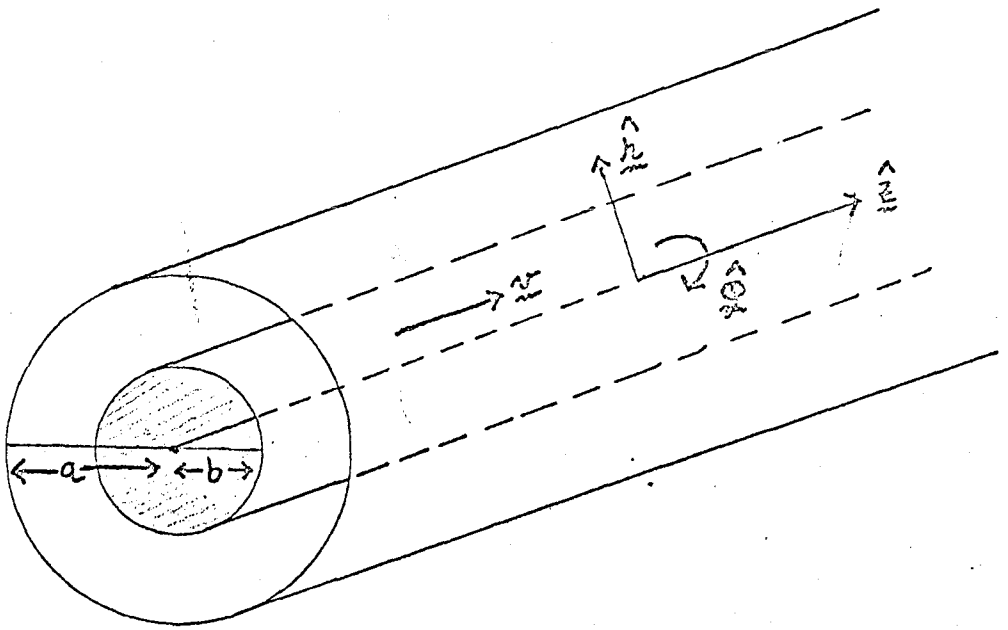

Fig. 1

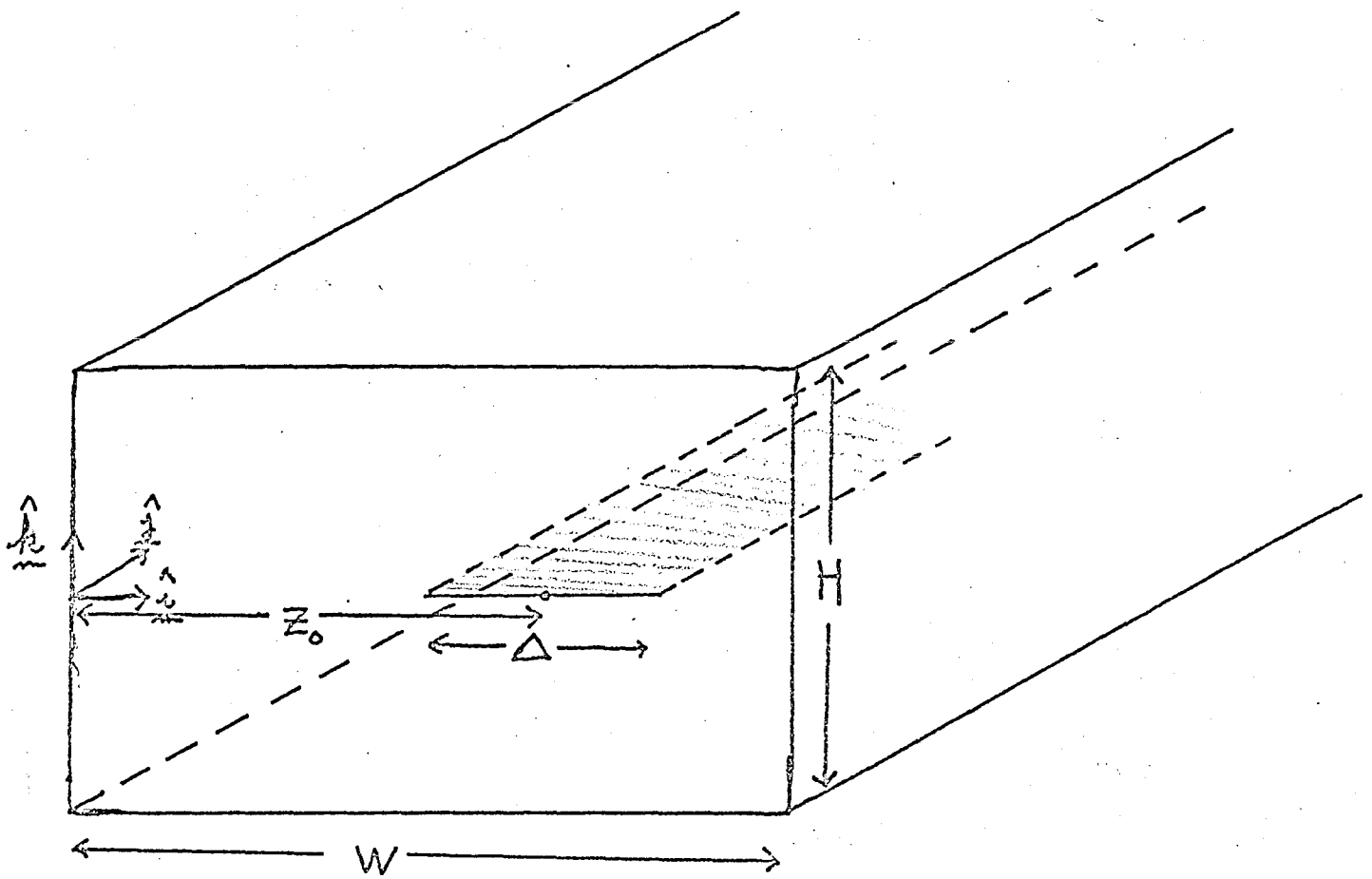

Fig. 2

This report was prepared as an account of Government sponsored work. Neither the United States, nor the Commission, nor any person acting on behalf of the Commission:

A. Makes any warranty or representation, expressed or implied, with respect to the accuracy, completeness, or usefulness of the information contained in this report, or that the use of any information, apparatus, method, or process disclosed in this report may not infringe privately owned rights; or

B. Assumes any liabilities with respect to the use of, or for damages resulting from the use of any information, apparatus, method, or process disclosed in this report.

As used in the above, "person acting on behalf of the Commission" includes any employee or contractor of the Commission, or employee of such contractor, to the extent that such employee or contractor of the Commission, or employee of such contractor prepares, disseminates, or provides access to, any information pursuant to his employment or contract with the Commission, or his employment with such contractor.