UCRL-11125

University of California

Ernest O. Lawrence Radiation Laboratory

TWO-WEEK LOAN COPY

This is a Library Circulating Copy which may be borrowed for two weeks. For a personal retention copy, call Tech. Info. Division, Ext. 5545

STUDY OF DYNAMICAL S-MATRIX EQUATIONS WITH REGGE BEHAVIOR

Berkeley, California

DISCLAIMER

This document was prepared as an account of work sponsored by the United States Government. While this document is believed to contain correct information, neither the United States Government nor any agency thereof, nor the Regents of the University of California, nor any of their employees, makes any warranty, express or implied, or assumes any legal responsibility for the accuracy, completeness, or usefulness of any information, apparatus, product, or process disclosed, or represents that its use would not infringe privately owned rights. Reference herein to any specific commercial product, process, or service by its trade name, trademark, manufacturer, or otherwise, does not necessarily constitute or imply its endorsement, recommendation, or favoring by the United States Government or any agency thereof, or the Regents of the University of California. The views and opinions of authors expressed herein do not necessarily state or reflect those of the United States Government or any agency thereof or the Regents of the University of California.

Research and Development

UCRL-11125
UC-34 Physics
TID-4500 (24th Ed.)

UNIVERSITY OF CALIFORNIA
Lawrence Radiation Laboratory
Berkeley, California

AEC Contract No. W-7405-eng-48

STUDY OF DYNAMICAL S-MATRIX EQUATIONS WITH REGGE BEHAVIOR

C. Edward Jones

(Thesis)

October 31, 1963

Reproduced by the
Technical Information Division
Directly from author's Copy

Printed in USA. Price $2.25. Available from the
Office of Technical Services
U. S. Department of Commerce
Washington 25, D.C.

STUDY OF DYNAMICAL S-MATRIX EQUATIONS WITH REGGE BEHAVIOR

Contents

Abstract.....iii

I. Introduction.....1

II. The Dynamical Equation.....5

III. Maximal Analyticity of the Second Degree.....12

IV. Solution of the Integral Equations.....26

V. Crossing Symmetric Regge Representation and the Strip.....51

VI. Asymptotic Behavior of Regge Parameters.....63

Acknowledgments.....79

References and Footnotes.....80

STUDY OF DYNAMICAL S-MATRIX EQUATIONS WITH REGGE BEHAVIOR

C. Edward Jones

Lawrence Radiation Laboratory
University of California
Berkeley, California

October 31, 1963

ABSTRACT

A detailed study of the modified N/D equations with Regge behavior, originally proposed by Chew, is made herein. An exact version of the dynamical equation is formulated and it is shown to be of a combined Wiener-Hopf Fredholm type. The principle of Maximal Analyticity of the Second Degree is demonstrated as a tool for defining unambiguously and free of arbitrary parameters the dynamical equations and their solutions at low values of angular momentum. The so-called strip approximation to the equations, embodying a crossing symmetric Regge representation, is discussed and the validity of the approximation scheme is verified. An investigation is made into the high energy behavior of the Regge poles and residues which result as solutions to the dynamical equations in both the exact problem and in the strip approximation.

STUDY OF DYNAMICAL S-MATRIX EQUATIONS WITH REGGE BEHAVIOR

C. Edward Jones

Lawrence Radiation Laboratory
University of California
Berkeley, California

October 31, 1963

I. INTRODUCTION

Recent years have seen a number of attempts to formulate dynamical equations for the strong-interaction S matrix based upon its analyticity properties.[1-10] The starting point of these attempts has been the Mandelstam representation[11] which prescribes the analytic structure of two-body amplitudes as a function of the invariant momenta-squared. The common goal of these programs has been to provide a dynamical theory of strong-interaction phenomena based entirely upon observable S-matrix elements and their analytic continuation with no reference to quantum fields. This basic approach was first proposed by Heisenberg in 1943.[12]

The modern attempts at an S-matrix theory achieve dynamical content through a bootstrap mechanism wherein S-matrix elements are determined by integral equations involving other S-matrix elements. These equations eventually fold back on themselves and an all-over requirement of self-consistency is imposed. It is the hope of the S-matrix theorists that the requirements of self-consistency so imposed will

completely and uniquely determine the full S matrix. No current dynamical scheme works on such a grand scale and most practical calculations are considered successful if a sort of "local" self-consistency is achieved where one or a few amplitudes generate themselves self-consistently.

It is difficult to overstate the significance of the Mandelstam representation in the history of S-matrix dynamics. It is true that this development had been foreshadowed by the work of Chew and Low,[13] Karplus and Ruderman,[14] as well as others--particularly the work on one-dimensional dispersion relations[15]--but it seems fair to say that not until the understanding was achieved by Mandelstam of the analyticity properties in both energy and momentum-transfer could there be real hope for a dynamical theory based on the S matrix alone.

Few attempts at formulating dynamical S-matrix equations have been based on the full scattering amplitude, most efforts proceeding through the simpler one-variable partial-wave dispersion relations. Chew and Mandelstam initiated this work.[1] Within the framework of partial-wave dispersion relations, the basic philosophies and approximation schemes of S-matrix theory evolved.[16] These notions could be summarized briefly as follows: (1) Singularities nearest the physical region were most important and distant singularities could be neglected in a first approximation. (2) The left-hand cut arose from crossed channel processes, whereas the right-hand cut could be determined in the elastic approximation by unitarity. Thus exchanged particles were thought of as giving rise to the forces with the direct process being determined

by unitarity. (3) Assuming the left-hand cut discontinuity, that is the forces or potential, to be given, a linear integral equation employing the so-called N/D method could be established whose solution determined the partial wave amplitudes.

Further advance of S-matrix theory awaited a better understanding of the number and nature of the arbitrary parameters in the theory. Castillejo, Dalitz and Dyson[17] had pointed out the presence of arbitrary parameters in partial wave amplitudes due to the possibility of adding poles to the D-function (CDD poles), which did not alter the analyticity or unitarity of the amplitude. Such poles were identified with independent stable or unstable particles (depending on the values of the pole parameters). By "independent" particles we mean those not determined by a knowledge of the forces or the left-hand cut.

This arbitrariness in the partial-wave amplitudes could then be linked to subtractions needed to make the dispersion integrals of the Mandelstam representation converge. These subtraction terms could not be determined by the double-spectral-function. An important theorem by Froissart[18] established that no arbitrariness could be present above the p-wave and hence "independent" particles were restricted to be of spin one or less.

In 1961 the work of Regge on complex angular momentum showed how all the subtraction terms in potential theory where there is no arbitrariness could be formally determined, and presented the results in a form which could be readily adapted to the relativistic problem.[19]

Chew and Frautschi[20] proposed on this basis that the relativistic S-matrix contained no arbitrary parameters at all (except perhaps for a single mass to set the all-over scale). Recently, this proposal has found a more precise formulation in what is termed Maximal Analyticity of the Second Degree.[21] Under this principle, the low angular momentum partial waves are to be determined by interpolation from high angular momentum values. All particles in this view lie on Regge trajectories, none being more elementary than any other.

Postulating analyticity in angular momentum and that all particles lie on Regge trajectories for the relativistic S matrix leads to an understanding of the asymptotic properties of scattering amplitudes and, in principle, shows how all particle parameters are to be determined.

Chew has recently proposed a set of fully Reggeized dynamical S-matrix equations.[9] These equations have been further developed by Chew and Jones[10] and a specific model for calculations proposed.

In this paper we shall study the structure of these equations and see what can be established about the nature of the solutions. We shall also write down an exact version of the equations and determine when solutions exist. It will be possible for us to examine the points of difference between the exact equations and the approximate model[10] which will be used in actual calculations. Many questions to be investigated are relevant to both the exact and model cases.

One point to be investigated in detail is the manner in which the assumed postulate of Maximal Analyticity of the Second Degree--that is,

that the partial-wave amplitudes be interpolated from high angular momenta by analytic continuation--is to be enforced in practice. It will be seen that the model equations[10] (incorporating the new form of strip approximation) as written automatically embody this postulate.

We shall also investigate what the equations predict about the high energy behavior of the Regge pole parameters.

We now summarize the basic assumptions made and upon which the dynamical equations herein are formulated and discussed:

(1) Two body amplitudes are considered which obey the Mandelstam representation. For simplicity and convenience, the particles are assumed to be spinless.

(2) A Regge representation for the amplitude is assumed to hold in each of the three channels separately. That is, the partial-wave amplitude in each of the three channels as a function of the angular momentum ℓ is assumed meromorphic in the right half ℓ-plane $\mathrm{Re}\,\ell > -\frac{1}{2}$.

(3) We shall also assume that the residues of Regge poles which reach the right-half ℓ-plane vanish in the limit of high energies. Assumptions (2) and (3) will enable us to establish a crossing symmetric representation for the full amplitude in which the Regge asymptotic behavior for each channel is explicitly separated out with the rest of the amplitude vanishing at infinity in each of the energy variables. This representation is the basis for the Chew-Jones[10] strip approximation. In another section, we shall show that the residues computed from the strip equation do tend to vanish asymptotically.

(4) We shall assume where necessary that the Regge pole positions and reduced residues are real analytic functions with only a right-hand cut. This fact has been proved in potential scattering (except when trajectories intersect) by John R. Taylor[22] and made plausible in the relativistic case by Barut and Zwanziger.[23]

(5) Maximal Analyticity of the Second Degree as expressed by Chew[21] is assumed.

Finally, we remark that little attention has been given herein to the possible presence of cuts which reach the right-half ℓ-plane, as suggested by Mandelstam,[24] although some discussion on this point will be found in section VI. The reason for omitting a detailed discussion of this phenomenon is threefold. First, no simple means of incorporating the cuts explicitly into the equations has been discovered. Second, it is now known that a good fit of existing high energy scattering data is possible in terms of Regge poles alone,[25] suggesting that the cuts may be weak compared to the poles and that a calculation based on poles alone may have some chance of success. Third, a set of equations involving Regge poles only is an important model to study, and may very well suggest the next important step to take in bringing the equations closer to describing the real world.

II. THE DYNAMICAL EQUATION

We shall first write down the basic dynamical equation in its full generality. For convenience, we consider the equal mass case and define the partial-wave amplitude $B_\ell(s)$ in terms of the phase shift

$\delta_\ell(s)$ as follows

$$B_\ell(s) = \frac{\sin \delta_\ell(s) \; e^{i\delta_\ell(s)}}{\rho_\ell(s)} \tag{II. 1}$$

where s is the total energy squared in the center of mass and $\rho_\ell(s) \left(\frac{s-4}{4}\right)^\ell \sqrt{\frac{s-4}{s}}$, taking unit mass. The factor $\left(\frac{s-4}{4}\right)^\ell$ makes $B_\ell(s)$ real in the gap $0 < s < s_0$ for real values of ℓ (s_0 is threshold).[23]

It is well-known that $B_\ell(s)$ is an analytic function of s with a right and left-hand cut and may contain bound state poles for sufficiently small ℓ values. However, for our purposes we shall write down an equation simpler than the complete dispersion relation,[9] namely,

$$B_\ell(s) = B_\ell^P(s) + \frac{1}{\pi} \int_{s_0}^{s_1} ds' \; \frac{\mathrm{Im}\, B_\ell(s')}{s' - s} \tag{II. 2}$$

where ℓ is taken to be large enough so there are no bound state poles.

Here we see that $B_\ell^P(s)$ contains all the details of the high energy behavior of $B_\ell(s)$, while the last two terms in (II. 2) give simply a $1/s$ asymptotic behavior. Equation (II. 2) is true for any value of s_1 with $s_0 < s_1 < \infty$. On the other hand, equation (II. 1)

which is just elastic unitarity if the phase shift is real holds exactly only below the first inelastic threshold.

If we require the upper limit of integration s_1 in equation (II. 2) to be lower than the first inelastic threshold and assume that $B_\ell^P(s)$ is a given input function, then we may regard equations (II. 1) and (II. 2) as a well-defined mathematical problem for determining $B_\ell(s)$.

Of course in practice, we shall not know the function $B_\ell^P(s)$ exactly. To know it exactly would mean knowing the left-hand cut discontinuity, the right-hand cut discontinuity above s_1 and the asymptotic behavior of $B_\ell(s)$. However, it seems possible to make a reasonable approximation to $B_\ell^P(s)$ by including a few crossed channel Regge poles. In addition we may also assume that elastic unitarity (II.1) continues to be approximately valid above the inelastic threshold and under these two assumptions equations (II. 1) and (II. 2) become the basis for practical dynamical calculations as discussed by Chew[9] and Chew and Jones.[10]

However, we shall continue for the time being, to discuss the exact equations and shall take the next step by converting the problem into a linear integral equation by a modified N/D technique. That is, we shall write the amplitude as

$$B_\ell(s) = \frac{N_\ell(s)}{D_\ell(s)} \qquad \text{(II. 3)}$$

where $D_\ell(s)$ is cut from s_0 to s_1 and is real outside this region, while $N_\ell(s)$ carries the remaining cuts of $B_\ell(s)$ and is real in the region $0 < s < s_1$.

The justification for the break-up of $B_\ell(s)$ in (II. 3) is provided by the Omnes formula.[26] For sufficiently large ℓ such that there are no bound states we may define

$$D_\ell(s) = \exp\left\{-\frac{1}{\pi}\int_{s_0}^{s_1} ds' \frac{\delta_\ell(s')}{s'-s}\right\} \tag{II. 4}$$

Here we have assumed $\delta_\ell(s_0) = 0$. (We shall discuss our phase shift convention more fully in the next section.) The $D_\ell(s)$ so defined clearly carries the phase of $B_\ell(s)$ on the interval (s_0, s_1), is real outside this interval, and if $\delta_\ell(s_1) < \frac{\pi}{2}$, it has no poles or zeros. Finally, $D_\ell(s) \to 1$ as $s \to \infty$. Thus $D_\ell(s)$ has the dispersion relation

$$D_\ell(s) = 1 + \frac{1}{\pi}\int_{s_0}^{s_1} ds' \frac{\operatorname{Im} D_\ell(s')}{s'-s} . \tag{II. 5}$$

Using (II. 2) we may write for $N_\ell(s)$,

$$N_\ell(s) = B_\ell(s)\, D_\ell(s) = B_\ell^{P}(s)\, D_\ell(s) + \frac{D_\ell(s)}{\pi} \int_{s_0}^{s_1} ds' \, \frac{\mathrm{Im}\, B_\ell(s')}{s' - s} \tag{II. 6}$$

By definition, $N_\ell(s)$ is real in the interval (s_0 , s_1), so the second term in (II. 6) must cancel the imaginary part of the first term. We recall that the second term vanishes at infinity like $1/s$ which leads to the unambiguous identification:

$$\frac{D_\ell(s)}{\pi} \int_{s_0}^{s_1} ds' \, \frac{\mathrm{Im}\, B_\ell(s')}{s' - s} = -\frac{1}{\pi} \int_{s_0}^{s_1} ds' \, \frac{B_\ell^{P}(s')\, \mathrm{Im}\, D_\ell(s')}{s' - s} \tag{II. 7}$$

Finally, we may write for $N_\ell(s)$, incorporating (II. 5),

$$N_\ell(s) = B_\ell^{P}(s) + \frac{1}{\pi} \int_{s_0}^{s_1} ds' \, \frac{B_\ell^{P}(s') - B_\ell^{P}(s)}{s' - s} \, \rho_\ell(s')\, N_\ell(s') . \tag{II. 8}$$

This is just Chew's equation.[9] We have derived the equation step-by-step in order to call attention to all of the assumptions which are made, because at various points in subsequent discussion we shall find it necessary to modify nearly all of these assumptions.[27]

Equation (II. 8) provides a linear integral equation for $N_\ell(s)$, and $D_\ell(s)$ is then determined through the equation

$$D_\ell(s) = 1 - \frac{1}{\pi} \int_{s_0}^{s_1} ds' \, \frac{\rho_\ell(s') \, N_\ell(s')}{s' - s} \qquad \text{(II. 9)}$$

We now check that a solution of (II. 8) satisfies our original equations (II. 1) and (II. 2) with $B_\ell(s) = N_\ell(s)/D_\ell(s)$. If the solution $N_\ell(s)$ is real in (s_0, s_1) we see from (II. 9) that

$$\mathrm{Im}\left[\frac{1}{B_\ell(s)}\right] = \frac{1}{N_\ell(s)} \, \mathrm{Im}\, D_\ell(s) = - \rho_\ell(s) \qquad \text{(II. 10)}$$

But this relation is entirely equivalent to (II. 1) which is just unitarity. We emphasize that $N_\ell(s)$ must be real to justify such an argument because Banerjee[23] has shown that in certain cases (II. 8) may possess solutions which are not real. This situation will arise, for example, in a model problem where $B_\ell^P(s)$ is only approximate and happens to exceed

the unitarity limit at $s = s_1$ for some real value of ℓ. In this case branch points in ℓ occur at those values for which the unitarity limit is exceeded. In the exact problem we have been considering, unitarity will always be maintained.

We now check that equation (II. 2) is satisfied by our solution. We see that our solution gives

$$B_\ell(s) = B_\ell^P(s) + \frac{\frac{1}{\pi}\int_{s_0}^{s_1} ds' \frac{B_\ell^P(s')\,\rho_\ell(s')\,N_\ell(s')}{s'-s}}{1 - \frac{1}{\pi}\int_{s_0}^{s_1} ds' \frac{\rho_\ell(s')\,N_\ell(s')}{s'-s}} \qquad \text{(II. 11)}$$

Employing the same reasoning we have used before, we see that the second term in (II. 11) is real except for the interval (s_0, s_1) and moreover, it vanishes like $1/s$ as $s \to \infty$. We can thus make the identification

$$\frac{\frac{1}{\pi}\int_{s_0}^{s} ds' \frac{B_\ell^P(s')\,\rho_\ell(s')\,N_\ell(s')}{s'-s}}{1 - \frac{1}{\pi}\int_{s_0}^{s_1} ds' \frac{\rho_\ell(s')\,N_\ell(s')}{s'-s}} = \frac{1}{\pi}\int_{s_0}^{s_1} ds' \frac{\mathrm{Im}\, B_\ell(s')}{s'-s} \qquad \text{(II. 12)}$$

and equation (II. 2) is verified.

The derivation of this section is based upon the assumption that ℓ is real. It is simplest to formulate and to solve the equations for real ℓ and the amplitude for complex ℓ may be determined by analytic continuation. We have also assumed that ℓ is large enough so that there are no bound states. In the next section we shall analytically continue these equations to smaller ℓ values and shall verify that equation (II. 8) retains its form even though even though equation (II. 2) generally will be modified by the addition of bound state poles.

III. MAXIMAL ANALYTICITY OF THE SECOND DEGREE

For a fixed energy s, the amplitude $B_\ell(s)$ is holomorphic in ℓ to the right of some line $\mathrm{Re}\,\ell = M$. (It should be noted that, in the presence of Mandelstam cuts,[24] no fixed boundary for the region of holomorphy can be given which is valid for all values of the energy.) Assuming no natural boundaries are present in the ℓ-plane, one may define $B_\ell(s)$ for all values of ℓ in the complex plane by analytic continuation. However, it is not certain that the amplitude so defined for physical values of $\ell < M$ will actually coincide with the physical amplitude. If, for example, there exist spin $\frac{1}{2}$ or spin 1 particles or resonances that do not lie on Regge trajectories, then the interpolated amplitude will not coincide with the physical one at these angular momentum values. In these cases the physical amplitudes will contain a kronecker delta contribution, which is zero except at angular momenta $\frac{1}{2}$ or 1. The parameters of these particles will have to be grafted into the theory

and cannot be determined. They will be, in a sense, "elementary" particles.

Maximal Analyticity of the Second Degree[21] eliminates the possibility of such "elementary" particles by requiring that the interpolated and the physical amplitude coincide. Thus all parameters associated with particles and resonances which occur at lower angular momentum values are to be established by continuation from the holomorphic region of high angular momentum. Also other constants, like the one associated with the pion-pion s-wave channel are similarly determined.

Let us make two brief remarks in connection with this principle. First, it may be redundant. That is, it may turn out that no non-trivial solution to the S-matrix equations exists satisfying analyticity, unitarity in all three channels as well as crossing symmetry, which does not automatically embody Maximal Analyticity of the Second Degree. To prove such a statement, however, may be very difficult, since the theorem itself seems rather close to the complete solution of the dynamical problem. Meanwhile, this postulate appears to be a very satisfactory and--as we shall see--very powerful working hypothesis. To date several calculations as well as evidence from experiments appear to support the notion that all particles lie on Regge trajectories.

The second point is simply to note that Maximal Analyticity of the Second Degree implies the complete absence of CDD[17] poles.

We shall now examine our equations in more detail and show how they are to be defined for all ℓ-values using Maximal Analyticity of the Second Degree. We shall still work with the exact problem and assume that

s_1 is less than the threshold for production processes. We shall defer until the next section the question of the existence of the solutions of these equations in the sense of integral equation theory.

We begin by examining more carefully the D-function as defined earlier,

$$D_\ell(s) = \exp\left[-\frac{1}{\pi}\int_{s_0}^{s_1} ds' \frac{\delta_\ell(s')}{s'-s}\right] \qquad \text{(III. 1)}$$

This equation defines the D-function for large angular-momentum values, where there are no bound states. Threshold conditions on the amplitude dictate that $\delta_\ell(s_0)$ must be a integral multiple of π. However, since we want the D-function as defined in (III.1) to be free of zeroes in the absence of bound states, we are led to the convention

$$\delta_\ell(s_0) = 0 \qquad \text{(III. 2)}$$

for ℓ's sufficiently large that there are no bound states. This establishes once and for all the phase-shift convention and means that $D_\ell(s)$ has no poles or zeroes at large angular momentum. This convention will be shown to correspond to the usual one made in potential scattering.

Let us now focus our attention on a particular Regge pole in the amplitude which occurs at $\ell = \alpha(s)$. This formula may be inverted and gives the location $s = s_R(\ell)$ of a pole in the energy plane. If ℓ is large enough so there are no bound states this pole is to be reached in the usual manner by analytic continuation in energy through the right-hand cut from above the real axis (see figure 1). A companion pole is also located at $s = s^*_R(\ell)$ reached by coming up through the right-hand cut from the bottom. If we designate the residue of such a pole by $\Gamma(\ell)$, we can write in the neighborhood of the pole

$$e^{2i\delta_\ell(s)} \approx \frac{\Gamma(\ell)}{s - s_R(\ell)}$$

$$\delta_\ell(s) \approx \frac{-1}{2i} \ln (s - s_R(\ell)) \qquad \text{(III. 3)}$$

Thus $\delta_\ell(s)$ is logarithmically singular at $s = s_R(\ell)$ and also at $s = s^*_R(\ell)$.

As we decrease the angular momentum, the point $s_R(\ell)$ moves to the left in the energy plane. Finally $s_R(\ell)$ emerges through the branch cut onto the physical sheet, representing a bound state.

Let us now examine $D_\ell(s)$ as defined by equation (III. 1). We may view the integral over δ_ℓ as a contour integration C with fixed endpoints at $s' = s_0$ and $s' = s_1$. The point s is defined as

being above the contour (that is, with a small, positive imaginary part). Suppose we consider $D_\ell(s)$ for some particular angular momentum $\ell = \ell_0$, where the phase shift is now singular at $s_R(\ell_0)$. (See figure 2.) We determine the analytic continuation of $D_\ell(s)$ down through the (s_0, s_1) cut by distorting the contour as shown in figure 2. If we allow s to approach $s_R(\ell_0)$, the contour becomes pinched. It is easy to see if we distort the contour C around the branch point in $\delta_\ell(s)$ at $s = s_R(\ell_0)$ that as $s \to s_R(\ell_0)$ (see figure 3),

$$D_\ell(s) \propto \exp\left\{ -\frac{1}{\pi} \int_{s_R(\ell_0)} \frac{ds'}{s' - s} \left(\frac{+2\pi i}{2i} \right) \right\} \propto \left[s - s_R(\ell_0) \right] \tag{III. 4}$$

Thus we see explicitly that $D_\ell(s)$ has a zero on the second sheet at a position corresponding to the resonance pole. Note, however, that we must reach the zeroes of $D_\ell(s)$ by going through the (s_0, s_1) cut. We may also consider the N-function defined by

$$N_\ell(s) = B_\ell(s)\, D_\ell(s)$$

The right-hand cut for $N_\ell(s)$ begins at $s = s_1$. We see from figure 4 that since the branch point at $s = s_1$ is artificial, $B_\ell(s)$ will

have a pole at $s = s_R(\ell)$ whether we continue through the right-hand cut of $B_\ell(s)$ to the left or the right of s_1. Thus when we continue along path P the point $s_R(\ell_0)$ is a pole in $N_\ell(s)$, while if we continue along path Q, $s_R(\ell_0)$ is a zero of $D_\ell(s)$. Our definition of $D_\ell(s)$ with only a finite cut is responsible for putting the pole at $s_R(\ell_0)$ into both N and D. However it should be realized that $N_\ell(s)/D_\ell(s)$ has only a simple, not a double pole.

A similar argument to the one given also applies to the point $s = s^*_R(\ell)$, it also being a zero of $D_\ell(s)$ if we continue through the (s_0, s_1) cut from underneath.

Our process of analytic continuation in ℓ can now be carried further as we decrease ℓ. As we approach the value $\ell = \alpha(s_0)$ the singularity at $s_R(\ell)$ will approach the physical sheet. The function $s_R(\ell)$ is actually itself singular at $\ell = \alpha(s_0)$ but if we give ℓ a small, positive imaginary part in this neighborhood, the point $s_R(\ell)$ will emerge into the upper half s-plane dragging the contour with it. (See figure 5.)

It is interesting to study the motion of the singularities at $s_R(\ell)$ and $s^*_R(\ell)$ in the neighborhood of $\ell = \alpha(s_0)$. For this purpose, we employ the threshold equation for $\alpha(s)$ given by Barut and Zwanziger.[23]. Recalling that $\alpha(s_0)$ is real, we write

$$\ell - \alpha(s_0) \underset{s \to s_0}{\approx} i\, C\, (s - s_0)^{\alpha(s_0)+1/2} \qquad \text{(III. 5)}$$

where C is real and positive and ℓ is the pole position. By inverting (III. 5) we obtain

$$s_R(\ell) = \left(\frac{\ell - \alpha(s_0)}{C}\right)^{\frac{1}{\alpha(s_0)+1/2}} \left(e^{-i\pi/2}\right)^{\frac{1}{\alpha(s_0)+1/2}}$$

$$s^*_R(\ell) = \left(\frac{\ell - \alpha(s_0)}{C}\right)^{\frac{1}{\alpha(s_0)+1/2}} \left(e^{i\pi/2}\right)^{\frac{1}{\alpha(s_0)+1/2}} \qquad \text{(III. 6)}$$

These equations clearly show that as $\ell \to \alpha(s_0)$ from above with a small positive imaginary part, the imaginary part of $s_R(\ell)$ goes from negative to positive while that of $s^*_R(\ell)$ stays positive and does not change sign. This proves that with the path of continuation described the $s_R(\ell)$ singularity drags the contour and $s^*_R(\ell)$ does not interfere. Had we chosen to continue ℓ through $\ell = \alpha(s_0)$ with a negative imaginary part, the $s^*_R(\ell)$ singularity would have distorted the contour.

We now evaluate $D_\ell(s)$ for $\ell < \alpha(s_0)$, the integral from $s_R(\ell)$ to s_0 just being over the discontinuity of the logarithm,

$$D_\ell(s) = \exp\left\{-\frac{1}{\pi}\int_{s_R(\ell)}^{s_0} \frac{ds'}{s' - s}\,\frac{+2\pi i}{2i}\right\} \times$$

(cont.)

$$\times \exp\left\{-\frac{1}{\pi}\int_{s_0}^{s_1} ds' \frac{\delta_\ell(s')}{s'-s}\right\} = \frac{s-s_R(\ell)}{s-s_0} \exp\left\{-\frac{1}{\pi}\int_{s_0}^{s_1} ds' \frac{\delta_\ell(s')}{s'-s}\right\} \qquad \text{(III. 7)}$$

The zero in $D_\ell(s)$ is now a bound state since it occurs on the real axis. Particularly interesting is the fact clearly indicated by figure 5 that $\delta_\ell(s_0)$ is now equal to π. This ensures a cancellation of the apparent pole in $D_\ell(s)$ at $s = s_0$.

We have focused our attention on one Regge pole but clearly the argument is general and for m bound states we shall find that $\delta_\ell(s_0) = m\pi$. By investigating the high energy behavior of the phase shift we can establish a relativistic version of Levinson's theorem.[29] Assuming high energy behavior is governed by the Pomeranchuk Regge trajectory in the crossed channel one has[30]

$$\frac{e^{2i\delta_\ell(s)}-1}{2i} \xrightarrow[s\to\infty]{} \frac{i}{\ln s} + \frac{\pi}{2}\frac{1}{\ln^2 s} \quad . \qquad \text{(III. 8)}$$

which is valid for all ℓ .

For any positive energy, the amplitude also vanishes exponentially in the limit of large ℓ as shown by the Froissart-Gribov transform which defines $B_\ell(s)$. Hence we know

$$\delta_\ell(s) \xrightarrow[\substack{\ell\to\infty \\ s \text{ positive}}]{} n\pi \tag{III. 9}$$

where n is an integer. However the convention (III. 2) we have taken means $n = 0$. Since (III. 6) is good for all ℓ we may conclude that

$$\mathrm{Re}\,\delta_\ell(s) \xrightarrow[s\to\infty]{} 0 \tag{III. 10}$$

Hence the real part of the phase shift vanishes at infinity and equals $m\pi$ at threshold, m being the number of bound states; this is just the analogue of Levinson's Theorem[29] from ordinary potential scattering.

Another important point is that for all values of ℓ, $D_\ell(s)$ maintains the normalization

$$D_\ell(s) \xrightarrow[s\to\infty]{} 1 .$$

Let us now investigate the properties of $D_\ell(s)$ as a function of ℓ and s. First we observe that $D_\ell(s)$ has a branch point in ℓ at $\ell = \alpha(s_1)$ which occurs as an endpoint singularity at s_1 in the integration over δ_ℓ. To see this we expand $s_R(\ell)$ in the neighborhood of $\ell = \alpha(s_1)$,

$$s_R(\ell) = s_1 + s_R'(\alpha(s_1))\,[\ell - \alpha(s_1)]$$

$$\delta_\ell(s) \underset{\substack{s\to s_1 \\ \ell\approx\alpha(s_1)}}{\approx} \text{const.}\ \ell n\,[s - s_1 - s_R'(\ell - \alpha(s_1))] \qquad \text{(III. 11)}$$

Thus the singular part of $D_\ell(s)$ can be written

$$D_\ell(s) \underset{\ell\to\alpha(s_1)}{\approx} \exp\left\{-\frac{1}{\pi}\int_{s_0}^{s_1} ds'\ \ell n\,[s' - s_1 - s_R'(\ell - \alpha(s_1))]\right\}$$

(cont.)

$$= \text{const.} \exp \left\{ \text{const.} [\ell - \alpha(s_1)] \ \ell n [\ell - \alpha(s_1)] \right\} \tag{III. 12}$$

A similar branch point occurs at $\ell = \alpha^*(s_1)$. These two branch points occur off the real ℓ axis and may be connected as shown in figure 6. The correct path of continuation from high ℓ as traced out earlier is to stay on the real axis and go through the cut. This cut, of course, is entirely spurious. It appears also in $N_\ell(s)$ but cancels out of the full partial-wave amplitude. The proper choice of sheet in the ℓ-plane is completely determined by requiring that $D_\ell(s)$ have the resonance poles on its second sheet.

The distorted contour shown in figure 5 gets dragged to infinity as $\ell \to \alpha(\infty)$ and we expect a singularity in general to occur in $D_\ell(s)$ at $\ell = \alpha(\infty)$. This point will be discussed in a later section.

Now let us turn to an examination of the structure of $D_\ell(s)$ in the s variable. Singularities occur in $D_\ell(s)$ at $s = s_0$ and $s = s_1$. For s near s_1 we can expand $\delta_\ell(s)$ and obtain

$$D_\ell(s) \underset{\substack{s \to s_1 \\ \text{from below}}}{\approx} \Gamma(\ell, s) \exp \left[- \frac{1}{\pi} \int_{s_0}^{s_1} \frac{ds'}{s' - s} \left\{ \delta_\ell(s_1) \right.\right.$$

(cont.)

$$+ \delta_\ell{}'(s_1)(s' - s_1) + \cdots \Big\} \Big]$$

$$= \Gamma(\ell, s) \frac{c_1}{(s_1 - s)^{\delta_\ell(s_1)/\pi}} \left\{ \cos \delta_\ell(s_1) - i \sin \delta_\ell(s_1) \right\} \tag{III. 13}$$

Here $\Gamma(\ell, s)$ will be unity unless there are bound states in which case it will have the form (III. 5) . The constant c_1 is positive. If we approach the point s_1 from above we have

$$D_\ell(s) \underset{\substack{s \to s_1 \\ \text{from above}}}{\approx} \Gamma(\ell, s) \frac{c_2}{(s_1 - s)^{\delta_\ell(s_1)/\pi}} \tag{III. 14}$$

where again c_2 is a positive constant. As discussed earlier, our definition of $D_\ell(s)$ assures it will be free from zeroes except for bound state zeroes which emerge onto the physical sheet at low ℓ-values. This fact is reflected in the positive character of c_2 in (III. 10) which enables $D_\ell(s)$ to connect asymptotically to plus one at infinity with no zeroes above s_1. In figure 7 we sketch the graph of $\mathrm{Re}\, D_\ell(s)$ for several values of ℓ starting at a value for which there are no bound states. Note that the value of $\delta_\ell(s_1)$ determines the sign of

Re $D_\ell(s)$ as we approach s_1 from below and also determines the strength of the singularity at s_1.

Although we have seen how $D_\ell(s)$ is to be defined for lower angular momenta by continuation from high ℓ and also $N_\ell(s)$ through the equation $N_\ell(s) = B_\ell(s)\, D_\ell(s)$, it remains to find the equation satisfied by $N_\ell(s)$ for these lower ℓ values where bound states occur. We shall find that $N_\ell(s)$ continues to satisfy (II. 8) even in the case of bound states (so long as $\delta_\ell(s_1) < \pi$). One may ask why not just continue equation (II. 8) in ℓ? The answer is that there may be points along our path of continuation where $\delta_\ell(s_1) > \pi$ and in these cases the integral term of the equation will not be defined. The fundamental definition of $N_\ell(s)$ is in terms of $B_\ell(s)$ and $D_\ell(s)$, so we begin with equation (II. 2) which in the presence of a bound state becomes

$$B_\ell(s) = B_\ell^{P}(s) + \frac{1}{\pi} \int_{s_0}^{s_1} ds' \, \frac{\operatorname{Im} B_\ell(s')}{s' - s} + \frac{\Gamma(\ell)}{s - s_R(\ell)} \tag{III. 15}$$

As long as $\delta_\ell(s_1) < \pi$ for the particular ℓ-value we are looking at, equation (II. 5) will continue to be valid (if $\delta_\ell(s_1) > \pi$, the integral term in (II. 5) will not converge as one may see from (III. 9)). All the remaining steps of the argument go through[30], equation (II. 7) becoming

$$\frac{D_\ell(s)}{\pi} \int_{s_0}^{s_1} ds' \, \frac{\mathrm{Im}\, B_\ell(s')}{s' - s} + \frac{D_\ell(s)\, \Gamma(\ell)}{s - s_R(\ell)}$$

$$= - \frac{1}{\pi} \int_{s_0}^{s_1} ds' \, \frac{B_\ell^{\,P}(s')\, \mathrm{Im}\, D_\ell(s')}{s' - s}$$

Equation (II. 8) then follows. It has been crucial to the above argument that $D_\ell(s)$ retain its normalization to unity, its asymptotic behavior, and also its original analyticity during the process of continuation to lower ℓ-values. These facts which were proved in this section show the manifest way in which Maximal Analyticity of the Second Degree determines the dynamical equations for lower angular momenta. We have thus also verified that the strip equations of references 9 and 10, which are based on (II. 8) , are in correct form for the lower angular momenta values where the strip calculations are to be made.

The question of what happens to the form of the dynamical equation for values of ℓ with $\delta_\ell(s_1) > \pi$ will be answered in the next section where we consider the solutions of the integral equations.

IV. SOLUTIONS OF THE INTEGRAL EQUATIONS

In Section II we derived the Chew equation[9] for $N_\ell(s)$ (see (II. 8)) and we have seen in the previous section that the equation continues to be valid when we analytically continue to lower angular momenta whenever $\delta_\ell(s_1) < \pi$. In this section we consider the following important questions: (1) Does equation (II. 8) continue to be satisfied by $N_\ell(s)$ for ℓ's with $\delta_\ell(s_1) > \pi$? (2) Can the equation (II. 8) be reduced to a standard-type integral equation (such as a Fredholm type)? (3) Are the solutions of the integral equation unique? We continue to regard (II. 8) in what follows as an exact equation.

The answer to question (1) will turn out to be no; for values of ℓ such that $\delta_\ell(s_1) > \pi$, equation (II. 8) will have to be modified. Question (2) has already been partially answered by Chew.[32] He showed that the answer is yes if $\delta_\ell(s_1) < \frac{\pi}{2}$. We shall extend his result and show that a solution to the relevant (in some cases modified) version of (II. 8) exists for all real ℓ.

The answer to question (3) is, in general, no. The solutions to the integral equations are not always unique. However, once again Maximal Analyticity of the Second Degree comes to the rescue, and we shall find that requiring a given solution be connected to the solutions for high ℓ removes completely all arbitrariness. Of course this last statement must be regarded as obvious if the solutions at high ℓ are unique. Since we have seen in the last section that $N_\ell(s)$ possesses a continuation to all ℓ (i.e. there are no natural boundaries), it follows that if a

unique solution exists for a certain range of high ℓ, the solution for all ℓ is uniquely determined. What is not clear is that the solutions of (II. 8) regarded as an integral equation for a fixed ℓ-value are unique. In fact, as mentioned, this is not true, in general.

We wish to emphasize the importance of being able to put the dynamical equation into the form of one of the standard integral equation types. First, of course, many important, general theorems concerning the nature and existence of solutions become accessible from integral equation theory. Any formulation of the exact problem must of necessity have a solution if our basic equations are correct--even if the equations were not standard type integral equations. But of overriding practical importance is the solubility of the problem when the equation and the input are approximate. Here it is obviously a distinct advantage to have the integral equation in a standard form so we can tell when the approximate problem has solutions.

We begin by discussing the solutions of the dynamical equations for large ℓ. For sufficiently big ℓ, $\delta_\ell(s_1) < \frac{\pi}{2}$ and there are no bound states. The important point here is that equation (III. 10) shows that unless $\delta_\ell(s_1) < \pi$, $D_\ell(s)$ will have a pole (generally superimposed with a branch point) at $s = s_1$ and in this case the dispersion relation (II. 5) for $D_\ell(s)$ would not be valid and hence the dynamical equation (II. 8) would not be correct. The reason for restriction to $\delta_\ell(s_1) < \frac{\pi}{2}$ in the beginning will become clear as we proceed. With $\delta_\ell(s_1) < \frac{\pi}{2}$ all conditions are fulfilled in section II for the deriva-

tion of equation (II. 8) and we are faced with finding a solution to this integral equation.

In equation (II. 2) as $s \to s_1$ from above the second term has the limiting behavior,

$$\frac{1}{\pi} \int_{s_0}^{s_1} ds' \; \frac{\mathrm{Im}\, B_\ell(s')}{s' - s} \longrightarrow \frac{\mathrm{Im}\, B_\ell(s_1)}{\pi} \; \ell n(s - s_1) \, , \tag{IV. 1}$$

So in order for unitarity to be preserved at $s = s_1$, it follows that

$B_\ell{}^P(s_1) \xrightarrow[s \to s_1]{} - \dfrac{\mathrm{Im}\, B_\ell(s_1)}{\pi} \; \ell n(s_1 - s)$. Thus the kernel of our original equation (II. 8) behaves like $\dfrac{\ell n(s_1 - s') - \ell n(s_1 - s)}{s' - s}$ as both s and s' approach s_1 and is not square integrable or of the Fredholm type.

Following Chew[32] we may recast the problem into the form of two simultaneous integral equations by separating off the singular part of the kernel. Using Chew's notation[32] we rewrite equation (II. 8)

$$N_\ell(s) = B_\ell{}^P(s) + \int_{s_0}^{s_1} ds' \; K_\ell(s, s') \, N_\ell(s')$$

$$- \frac{\lambda_\ell}{\pi^2} \int_{s_0}^{s_1} ds' \, k_0(s, s') \, N_\ell(s') \qquad \text{(IV. 2)}$$

where

$$k_0(s, s') = \frac{\ell n(s_1 - s') - \ell n(s_1 - s)}{s' - s} \qquad \text{(IV. 3)}$$

$$\lambda_\ell = \rho_\ell(s_1) \; \mathrm{Im}\, B_\ell^{\,P}(s_1) = \sin^2 \delta_\ell(s_1)$$

The two coupled integral equations are

$$N_\ell^{\,0}(s) = B_\ell^{\,P}(s) + \int_{s_0}^{s_1} ds' \, K_\ell(s, s') \, N_\ell(s') \qquad \text{(IV. 4)}$$

$$N_\ell(s) = N_\ell^{\,0}(s) - \frac{\lambda_\ell}{\pi^2} \int_{s_0}^{s_1} ds' \, k(s, s') \, N_\ell(s') \qquad \text{(IV. 5)}$$

Chew's procedure[32] then consists in the explicit construction of the resolvent kernel $O_\ell(s, s')$ for equation (IV. 5) such that

$$N_\ell(s) = \int_{s_0}^{s_1} ds' \, O_\ell(s, s') \, N_\ell^{O}(s') \, . \qquad \text{(IV. 6)}$$

With a knowledge $O_\ell(s, s')$ (which depends only upon λ_ℓ) , $N_\ell^{O}(s)$ may be found as the solution of

$$N_\ell^{O}(s) = B_\ell^{P}(s) + \int_{s_0}^{s_1} ds' \, K_\ell'(s, s') \, N_\ell^{O}(s')$$

$$K_\ell'(s, s') = \int_{s_0}^{s_1} ds'' \, K_\ell(s, s'') \, O_\ell(s'', s') \qquad \text{(IV. 7)}$$

With the solving of (IV. 7) , $N_\ell(s)$ may be determined by equation (IV. 6) . Chew showed that (IV. 5) possessed a solution for $\delta_\ell(s_1) < \frac{\pi}{2}$ of the Wiener-Hopf type and that under these conditions (IV. 7) becomes

of Fredholm type so $N_\ell(s)$ is completely and uniquely determined.[32]

In our case the Chew solution is the one we are interested in for large ℓ since $\delta_\ell(s_1) < \frac{\pi}{2}$. Of course, in principle, we may just analytically continue the solution so obtained to all ℓ values but in practice such a continuation procedure may be difficult. So we now explore how explicitly to obtain $N_\ell(s)$ for lower ℓ. The first step is obtaining the solution in the region of ℓ such that $\pi > \delta_\ell(s_1) > \frac{\pi}{2}$. We shall see that this may be accomplished by analytically continuing the resolvent kernel $O_\ell(s, s')$ in ℓ.

To carry out our program we must review the construction of the solution to the Wiener-Hopf equation (IV. 5) which Chew discusses for $\delta_\ell(s_1) < \frac{\pi}{2}$. The change of variables

$$x = \ell n \left[\frac{(s - s_0)}{(s_1 - s)}\right] \qquad \text{(IV. 8)}$$

leads to the equation

$$n_\ell(x) = n_\ell^0(x) + \frac{\lambda_\ell}{\pi^2} \int_0^\infty dx' \, \frac{x' - x}{e^{x' - x} - 1} \, n_\ell(x') \qquad \text{(IV. 9)}$$

obtained by substituting (IV. 8) into equation (IV. 5) . The Wiener-Hopf technique[33] consists now in defining $n_\ell^+(x)$ and $n_\ell^-(x)$ as follows,

$$
\begin{aligned}
n_\ell^+(x) &= n_\ell(x) && x > 0 \\
&= 0 && x < 0 \\
n_\ell^-(x) &= 0 && x > 0 \\
&= n_\ell(x) && x < 0
\end{aligned}
\qquad \text{(IV. 10)}
$$

We may thus write

$$n_\ell(x) = n_\ell^+(x) + n_\ell^-(x) \; . \qquad \text{(IV. 11)}$$

We next adopt for convenience the convention that

$$n_\ell^0(x) = 0 \qquad x < 0 \qquad \text{(IV. 12)}$$

Taking the Fourier transform of equation (IV. 9) gives

$$g_\ell^+(k)\left[1 - \frac{\sin^2\delta_\ell(s_1)}{\sin^2 \pi i k}\right] + g_\ell^-(k) = g_\ell^0(k) \qquad \text{(IV. 13)}$$

where g_ℓ^+, g_ℓ^-, g_ℓ^0 are the Fourier transforms of n_ℓ^+, n_ℓ^-, n_ℓ^0. Both $N_\ell(s)$ and $D_\ell(s)$ are singular at $s = s_1$ (which corresponds here to $x = \infty$) but their ratio must be regular at this point. Thus $N_\ell(s)$ must have the same singular behavior as $D_\ell(s)$ near $s = s_1$. That is, from (III. 10) we conclude that

$$N_\ell(s) \underset{s\to s_1}{\approx} \frac{\text{const.}}{(s_1 - s)^{\frac{\delta_\ell(s_1)}{\pi}}} \qquad \text{(IV. 14)}$$

Thus we seek a solution of (IV. 9) with the behavior

$$n_\ell(x) \xrightarrow[x\to\infty]{} \exp\left[\frac{\delta_\ell(s_1)}{\pi}\, x\right] \qquad \text{(IV. 15)}$$

This requirement on $n_\ell(x)$ means that $g_\ell^+(k)$ is holomorphic in the half-plane $\mathrm{Im}\, k > \delta_\ell(s_1)/\pi$; $g_\ell^-(k)$ is holomorphic in the half-plane $\mathrm{Im}\, k < 1$; $g_\ell^0(k)$ is holormorphic in the half-plane $\mathrm{Im}\, k > 0$. Furthermore if $n_\ell(x)$ is well-behaved at $x = 0$, g_ℓ^+ and $g_\ell^-(k)$ each vanish as $|k| \to \infty$ in their half-planes of holomorphy. The quantity

$$U(\ell, k) = 1 - \frac{\sin^2 \delta_\ell(s_1)}{\sin^2 \pi i k} \tag{IV. 16}$$

is holomorphic in the strip $0 < \mathrm{Im}\, k < 1$. However, it is important to note that $U(\ell, k)$ has two zeroes in the strip at

$$i\, k_{\ell 1} = \frac{\delta_\ell(s_1)}{\pi} \quad \text{and} \quad i\, k_{\ell 2} = 1 - \frac{\delta_\ell(s_1)}{\pi} \tag{IV. 17}$$

The Wiener-Hopf method consists in factorizing $U(\ell, k)$

$$U(\ell, k) = \frac{\phi_\ell^+(k)}{\phi_\ell^-(k)} \tag{IV. 18}$$

in such a way that $\phi_\ell^+(k)$ is holomorphic and free from zeroes in some upper half-plane and $\phi_\ell^-(k)$ is holomorphic and free from zeroes in some lower half-plane, the two half-planes being required to overlap in a strip which lies inside the region $0 < \text{Im } k < 1$. This strip must contain a substrip in which the quantities $g_\ell^\pm(k)$, $g_\ell^0(k)$ are also holomorphic. The functions $\phi_\ell^\pm(k)$ can be chosen such that the growth as $|k| \to \infty$ is only algebraic. We then rewrite equation (IV. 13)

$$g_\ell^+(k)\, g_\ell^+(k) + g_\ell^-(k)\, \phi_\ell^-(k) = g_\ell^0(k)\, \phi_\ell^-(k) \qquad \text{(IV. 19)}$$

Finally, the product $g_\ell^0(k)\, \phi_\ell^-(k)$ can be written

$$g_\ell^0(k)\, \phi_\ell^-(k) = \eta_\ell^+(k) + \eta_\ell^-(k) \qquad \text{(IV. 20)}$$

in a manner to be described shortly, such that $\eta_\ell^+(k)$ is holomorphic in an upper half-plane, $\eta_\ell^-(k)$ is a lower half-plane and where the two half-planes overlap in the substrip defined above. Thus we may write

$$g_\ell^+(k)\ \phi_\ell^+(k) - \eta_\ell^+(k) = - g_\ell^-(k)\ \phi_\ell^-(k) + \eta_\ell^-(k) \qquad \text{(IV. 21)}$$

The left side of (IV. 20) is holomorphic in the upper half-plane and the right side is analytic in the lower half-plane and there exists a common strip of holomorphy. This means that both sides of (IV. 20) are entire functions of k and in fact are equal to some polynomial $P(k)$.

In order to proceed further, we must now consider the explicit construction of $\phi_\ell^{\pm}(k)$. We observe that

$$U(\ell, k) = \frac{\sin[\pi i k + \delta_\ell(s_1)] \sin[\pi i k - \delta_\ell(s_1)]}{\sin^2 \pi i k}$$

$$= \frac{\Gamma^2(-i k)\, \Gamma^2(1 + i k)}{\Gamma(-i k - \delta_\ell)\, \Gamma(1 + \delta_\ell + i k)\, \Gamma(\delta_\ell - i k)\, \Gamma(1 + i k - \delta_\ell)} \tag{IV. 22}$$

where $\delta_\ell = \dfrac{\delta_\ell(s_1)}{\pi}$.

Each gamma function appearing in equation (IV. 21) has an upper or lower half-plane of holomorphy as follows:

Table I

	Region of holomorphy
$\Gamma(-i k)$	$\mathrm{Im}\, k > 0$
$\Gamma(1 + i k)$	$\mathrm{Im}\, k < i$

	Region of holomorphy
$\Gamma(\delta_\ell - i\,k)$	$\mathrm{Im}\,k > -i\,\delta_\ell$
$\Gamma(1 + \delta_\ell + i\,k)$	$\mathrm{Im}\,k < i\,(1 + \delta_\ell)$
$\Gamma(-i\,k + \delta_\ell)$	$\mathrm{Im}\,k > i\,\delta_\ell$
$\Gamma(1 + i\,k - \delta_\ell)$	$\mathrm{Im}\,k < i\,(1 - \delta_\ell)$

If $\delta_\ell(s_1) < \frac{\pi}{2}$ then we may define

$$\phi_\ell^{+}(k) = \frac{\Gamma^2(-i\,k)}{\Gamma(\delta_\ell - i\,k)\,\Gamma(-i\,k - \delta_\ell)} \tag{IV. 23}$$

$$\phi_\ell^{-}(k) = \frac{\Gamma(1 + \delta_\ell + i\,k)\,\Gamma(1 - \delta_\ell + i\,k)}{\Gamma^2(1 + i\,k)} \tag{IV. 24}$$

and all functions in equation (IV. 19) are holomorphic in the substrip $\delta_\ell < \mathrm{Im}\,k < 1 - \delta_\ell$ shown in figure 8. Both $\phi_\ell^{\pm}(k)$ approach constants as $|k| \to \infty$. Let us consider the possibility of homogeneous solutions to our problem where $g_\ell^{0}(k) = 0$. Then equation (IV. 19) becomes

$$g_\ell^{+}(k)\,\phi_\ell^{+}(k) = -\,g_\ell^{-}(k)\,\phi_\ell^{-}(k) = P\,(k) \tag{IV. 25}$$

where $P(k)$ is an entire function of k. However, since $g_\ell^{\pm}(k) \to 0$ as $|k| \to \infty$ and $\phi^{\pm}(k)$ approach constants, $P(k)$ must be identically zero and $g_\ell^{\pm}(k)$ are therefore zero proving that no non-trivial homogeneous solution exists. Thus the solution to the inhomogeneous problem is unique.

Suppose we attempt a solution to the problem when $\delta_\ell(s_1) > \frac{\pi}{2}$. In this case the strip region where all relevant functions must be holomorphic is shown in figure 9. The factorization made earlier will not work for the strip of figure 9 but it is easy to establish a new factorization

$$U(\ell, k) = \frac{\phi_\ell'^{+}(k)}{\phi_\ell'^{-}(k)} \tag{IV. 26}$$

where

$$\phi_\ell'^{+}(k) = \phi_\ell^{+}(k)\,[k - i(1 - \delta_\ell)]$$

$$\phi_\ell'^{-}(k) = \phi_\ell^{-}(k)\,[k - i(1 - \delta_\ell)]$$

We consider whether a homogeneous solution exists in this case. The only difference between this case and the one previously considered is that

$\phi_\ell'^{\pm}(k)$ diverge linearly as $|k| \to \infty$. This means $P(k)$ of (IV. 24) may be a constant, Thus

$$g_\ell'^{+}(k) = \frac{c}{\phi_\ell'^{+}(k)} \tag{IV. 27}$$

and

$$n_\ell^{+}(x) = c \int_C dk \frac{e^{-ikx}}{\phi_\ell'^{+}(k)} \tag{IV. 28}$$

where C is a contour inside the strip (see figure 9) . If $x > 0$ we can close the contour C in the lower half-plane and the two zeroes of $\phi_\ell'^{+}(k)$ in the strip produce the following asymptotic behavior for $n_\ell^{+}(x)$

$$n_\ell^{+}(x) \xrightarrow[x\to\infty]{} C_1 \exp\left[1 - \frac{\delta_\ell(s_1)}{\pi}\right]x + C_2 \exp\left[\frac{\delta_\ell(s_1)}{\pi}\right]x \, . \tag{IV. 29}$$

Since $\delta_\ell(s_1) > \frac{\pi}{2}$ the second term of (IV. 29) gives the leading and physically required asymptotic behavior. Thus it would appear that there exists an arbitrariness in the solution for values of ℓ with $\delta_\ell(s_1) > \frac{\pi}{2}$. However, as we shall now see, this arbitrariness is completely eliminated by Maximal Analyticity of the Second Degree. The solution (IV. 25) may be continued in ℓ to a region where $\delta_\ell(s_1) < \frac{\pi}{2}$ and equation (IV. 26) still gives the asymptotic behavior of the solution. Now, however, since $\delta_\ell(s_1) < \frac{\pi}{2}$, the first term of (IV. 26) gives the leading behavior which violates the physical requirement established earlier that

$$n_\ell(x) \to \exp\left[\frac{\delta_\ell(s_1)}{\pi}\right] x \text{ as } x \to \infty .$$

What can we conclude from this result? First, we see that an apparent arbitrariness in the solution of the dynamical equations when ℓ is such that $\delta_\ell(s_1) > \frac{\pi}{2}$ is deceptive. That is, one cannot, in general, add to the inhomogeneous solution obtained when $\delta_\ell(s_1) > \frac{\pi}{2}$ an arbitrary multiple of the homogeneous solution. Such a solution will not be correctly linked to higher angular momenta in accordance with Maximal Analyticity of the Second Degree. What occurs is that the inhomogeneous solution for $\delta_\ell(s_1) > \frac{\pi}{2}$ must be modified by adding a uniquely determined multiple of the homogeneous solution so that the right asymptotic behavior is obtained when the amplitude is continued to ℓ-values with $\delta_\ell(s_1) < \frac{\pi}{2}$. In this manner, the apparent arbitrariness in the solution is completely removed.

In practice it will not be necessary to carry out explicitly

the steps just indicated to determine the solutions for $\delta_\ell(s_1) > \frac{\pi}{2}$. It is simpler just to analytically continue the solutions which are uniquely determined for $\delta_\ell(s_1) < \frac{\pi}{2}$. This is accomplished by analytically continuing the resolvent kernel $\theta_\ell(x, x')$. We now show that this kernel can be so continued and that the solution determined for $\delta_\ell(s_1) > \frac{\pi}{2}$ meets all physical requirements. We return then to a consideration of equation (IV. 19) and solutions in the strip region indicated in figure 8.

To achieve the break-up of $g_\ell^0(k)\,\phi_\ell^-(k)$ given in (IV. 20) we recall that the product is holomorphic in the strip $1 - \delta_\ell(s_1) > \operatorname{Im} k > 0$. We then write a Cauchy integral for $g_\ell^0(k)\,\phi_\ell^-(k)$ with k in this strip (see figure 8). The result is

$$\frac{1}{2\pi i}\int_C dk' \frac{g_\ell^0(k')\,\phi_\ell^-(k')}{k'-k} = \frac{1}{2\pi i}\int_{-\infty+i\epsilon}^{+\infty+i\epsilon} \frac{dk'}{k'-k} \times g_\ell^0(k')\,\phi_\ell^-(k') - \frac{1}{2\pi i}\int_{-\infty+1-\delta_\ell-i\epsilon}^{\infty+1-\delta_\ell-i\epsilon} \frac{dk'}{k'-k}\, g_\ell^0(k')\,\phi_\ell^-(k') \tag{IV. 30}$$

The asymptotic behavior of $g_\ell^0(k)\,\phi_\ell^-(k)$ as $|k| \to \infty$ ensures that

these integrals converge and we may identify

$$\eta_\ell^{+}(k) = \frac{1}{2\pi i} \int_{-\infty+i\epsilon}^{\infty+i\epsilon} \frac{dk'}{k'-k} \, g_\ell^{0}(k') \, \phi_\ell^{-}(k')$$

$$\eta_\ell^{-}(k) = -\frac{1}{2\pi i} \int_{-\infty+1-\delta_\ell-i\epsilon}^{\infty+1-\delta_\ell-i\epsilon} \frac{dk'}{k'-k} \, g_\ell^{0}(k') \, \phi_\ell^{-}(k') \tag{IV. 31}$$

Each side of (IV. 21) vanishes identically (see Chew[32]) and we have

$$g_\ell^{+}(k) = \frac{1}{2\pi i} \frac{1}{\phi_\ell^{+}(k)} \int_{-\infty+i\epsilon}^{\infty+i\epsilon} \frac{dk'}{k'-k} \, g_\ell^{0}(k') \, \phi_\ell^{-}(k') \tag{IV. 32}$$

$$n_\ell^{+}(x) = \frac{1}{\sqrt{2\pi}} \int_C dk \, e^{-ikx} \, g_\ell^{+}(k) \tag{IV. 33}$$

The contour C runs through the strip $\delta_\ell < \text{Im } k < 1 - \delta_\ell$. We note from equation (IV. 32) that $g_\ell^+(k)$ has a pole at $k = i\,\delta_\ell$ coming from a zero of $\phi_\ell^+(k)$ at that point; the integral factor is holomorphic for $\text{Im } k > 0$. If we deform contour C around the pole at $k = i\,\delta_\ell$ conclude that

$$n_\ell^+(x) \xrightarrow[x\to\infty]{} \exp\,[\delta_\ell x] \qquad \text{(IV. 34)}$$

Furthermore, equations (IV. 32) and (IV. 33) may be analytically continued in ℓ into the region where $\delta_\ell > \frac{1}{2}$. We must deform contour C during this process, keeping it always above the rising pole at $k = i\,\delta_\ell$. We see that the asymptotic behavior (IV. 34) persists which meets the physical requirement and the solution for $\delta_\ell > \frac{1}{2}$ is thus uniquely determined by this procedure.

We now examine the resolvent kernel $\theta_\ell(x,x')$ for the solution with $\delta_\ell > \frac{1}{2}$.

$$\theta_\ell(x,\, x') = \frac{1}{\sqrt{2\pi}} \int_C dk\; e^{-ikx}\; \frac{1}{2\pi i\; \phi_\ell^+(k)} \int_{-\infty+i\epsilon}^{\infty+i\epsilon}$$

(cont.)

$$\frac{dk'}{k' - k} \; e^{ik'x'} \; \phi_\ell{}'(k') \qquad 35)$$

The k' integration may be performed by closing the contour in the upper half-plane, and computing the residues of the poles in the integrand. For our purposes we shall only need to consider the first two poles which occur in the integrand at $k' = i(1 - \delta_\ell)$ and $k' = k$, which will enable us to determine the asymptotic properties of the kernel. Thus

$$\frac{1}{2\pi i} \int_{-\infty+i\epsilon}^{\infty+i\epsilon} \frac{dk'}{k' - k} \; e^{ik'x'} \; \phi_\ell{}^-(k') \approx e^{ikx'} \; \phi_\ell{}^-(k)$$

$$+ \frac{e^{(\delta_\ell - 1)x'} \; \mathrm{Res}\, \phi_\ell{}^-(k' = i(1 - \delta_\ell))}{i(1 - \delta_\ell) - k} \qquad \text{(IV. 36)}$$

The k integration may be performed by closing the contour C in the lower half-plane if $x > x'$ and remembering that C lies above

$k = i\,\delta_\ell > i(1 - \delta_\ell)$. We keep the two leading poles at $k = i\,\delta_\ell$ and $k = i(1 - \delta_\ell)$ which give the asymptotic behavior in x, with x' fixed

$$\theta_\ell(x, x') \approx a_1 \exp[\delta_\ell(x - x')] + a_2 \exp[\delta_\ell x + (\delta_\ell - 1)\, x'] \tag{IV. 37}$$

where a_1 and a_2 are constants. In a similar way we may make the calculation assuming $x' > x$; in this case we must close the C contour above for the first term and the second term remains unchanged. Keeping the leading poles which give the asymptotic behavior in x' with fixed $x < x'$, we obtain

$$\theta_\ell(x, x') \approx a_1' \exp[(1 - \delta_\ell)(x - x')] + a_2' \exp[\delta_\ell x + (\delta_\ell - 1)\, x'] \tag{IV. 38}$$

Summarizing

$$\theta_\ell(x, x') \underset{\substack{x' \to \infty \\ x \text{ fixed}}}{\approx} \exp\,[(\delta_\ell - 1)\, x']$$

$$\theta_\ell(x, x') \underset{\substack{x\to\infty \\ x' \text{ fixed}}}{\approx} \exp[\delta_\ell x] \tag{IV. 39}$$

Expressing the kernel again in terms of s and s', the corresponding result is

$$O_\ell(s, s') \underset{\substack{s'\to s_1 \\ s \text{ fixed}}}{\approx} (s_1 - s')^{-\delta_\ell}$$

$$O_\ell(s, s') \underset{\substack{s\to s_1 \\ s' \text{ fixed}}}{\approx} (s_1 - s)^{-\delta_\ell} \tag{IV. 40}$$

These are the same limits which were established by Chew[32] in the case $\delta_\ell < \frac{1}{2}$. Now we wish to verify that equation (IV. 7) is essentially Fredhom so that a complete and unique solution to the problem exists. We must examine the kernel $K'(s, s')$ of (IV. 7) which is given by

$$K_\ell'(s, s') = \int_{s_0}^{s_1} ds''\ K_\ell(s, s'')\, O_\ell(s'', s') .$$

In the dangerous region

$$K_\ell(s, s'') \underset{s, s'' \to s_1}{\approx} \frac{(s_1 - s'')\,\ell n(s_1 - s'') - (s_1 - s)\,\ell n(s_1 - s)}{s'' - s}$$

$$O_\ell(s'', s') \underset{s'', s' \to s_1}{\overset{\mathcal{L}}{\approx}} \frac{1}{(s_1 - s'')^{\delta_\ell}\,(s_1 - s')^{\delta_\ell}}$$

(IV. 38)

From this we deduce (see Banerjee[28])

$$K_\ell'(s, s') \underset{s, s' \to s_1}{\lesssim} \frac{\ell n(s_1 - s)}{(s_1 - s')^{\delta_\ell}} \qquad \text{(IV. 39)}$$

For $\delta_\ell > \frac{1}{2}$, the kernel as it stands is not square integrable, but by setting

$$N_\ell^{O}(s) = \tilde{N}_\ell^{O}(s)(s_1 - s)^{\delta_\ell + \epsilon - \frac{1}{2}} \qquad \text{(IV. 40)}$$

where $\epsilon > 0$ as Banerjee suggests[28] we achieve a square integrable kernel in the equation determining $\tilde{N}_\ell^0(s)$ so the problem is solved. (We have already shown in section II that a solution for N and D determines a solution to the original problem).

Finally, we must discuss solutions to the dynamical equations when $\delta_\ell(s_1) > \pi$. For convenience let us assume that $\frac{3}{2}\pi > \delta_\ell(s_1) > \pi$, the modifications which we make in this case being easily generalized. When $\delta_\ell(s_1) > \pi$, equation (III. 10) indicates that $D_\ell(s)$ no longer possesses a simple branch cut but has a pole at s_1, superimposed upon a branch point. This means that equation (II. 5) is no longer true, nor is (II. 8) correct. The simplest procedure for dealing with this situation consists in defining a new function $\tilde{D}_\ell(s)$ defined by

$$\tilde{D}_\ell(s) = (s - s_1) \exp\left\{-\frac{1}{\pi} \int_{s_0}^{s_1} ds' \frac{\delta_\ell(s')}{s' - s}\right\} \qquad \text{(IV. 41)}$$

We must now retrace the steps leading to the formulation of equation (II. 8) in section II. First we observe that the asymptotic behavior of $\tilde{D}_\ell(s)$ is given by

$$\tilde{D}_\ell(s) \xrightarrow[s\to\infty]{} s + c_1(\ell) \qquad \text{(IV. 42)}$$

where $c_1(\ell) = \frac{1}{\pi} \int_{s_0}^{s_1} ds' \, \delta_\ell(s') - s_1$

Thus the dispersion relation for $\tilde{D}_\ell(s)$ which replaces (II. 5) is

$$\tilde{D}_\ell(s) = s + c_1(\ell) + \frac{1}{\pi} \int_{s_0}^{s_1} ds' \frac{\operatorname{Im} \tilde{D}_\ell(s')}{s' - s} \qquad \text{(IV. 43)}$$

We also define $\tilde{N}_\ell(s) = B_\ell(s) \tilde{D}_\ell(s)$ where $B_\ell(s)$ still satisfies equation (II. 2)

$$\tilde{N}_\ell(s) = B_\ell^P(s) \tilde{D}_\ell(s) + \frac{\tilde{D}_\ell(s)}{\pi} \int_{s_0}^{s_1} ds' \frac{\operatorname{Im} B_\ell(s')}{s' - s} \qquad \text{(IV. 44)}$$

Remembering the asymptotic behavior for $\tilde{D}_\ell(s)$ we may make the identification,

$$\frac{\tilde{D}_\ell(s)}{\pi} \cdot \int_{s_0}^{s_1} ds' \frac{\mathrm{Im}\, B_\ell(s)}{s' - s} = -\frac{1}{\pi} \int_{s_0}^{s_1} ds' \frac{B_\ell^P(s')\, \mathrm{Im}\, \tilde{D}_\ell(s')}{s' - s}$$

$$+ c_2(\ell) \qquad \text{(IV. 45)}$$

$$c_2(\ell) = -\frac{1}{\pi s} \int_{s_0}^{s_1} ds' \; \mathrm{Im}\, B_\ell(s')$$

We combine equations (IV. 43) - (IV. 45) to arrive at the integral equation for $\tilde{N}_\ell(s)$,

$$\tilde{N}_\ell(s) = B_\ell^P(s)[s + c_1(\ell)] + \frac{1}{\pi} \int_{s_0}^{s_1} ds' \frac{B_\ell^P(s') - B_\ell^P(s)}{s' - s} \times$$

$$\times \; \rho_\ell(s')\, \tilde{N}_\ell(s') + c_2(\ell) \qquad \text{(IV. 46)}$$

This equation for $\tilde{N}_\ell(s)$ may now be solved according to the techniques discussed earlier in this section to yield a unique solution. The in-

homogeneous part of the equation has been modified by the presence of two functions of ℓ , $c_1(\ell)$ and $c_2(\ell)$. From the point of view of the integral equation they are to be regarded as given quantities and they may be determined through their defining equations (see (IV. 42) and (IV. 45)) by analytic continuation from large ℓ . Thus the problem again has no indeterminancy when Maximal Analyticity of the Second Degree is enforced.

Although it seems highly unlikely in practice that we shall ever be called upon to solve equation (IV. 46) , still for certain general discussions (such as the one to be given in section VI), it is exceedingly helpful to know that regardless of the value of $\delta_\ell(s_1)$, $N_\ell(s)$ continues to be the unique solution of an integral equation of essentially the same form.

The results of this section may be summed up in the following way: it is always possible to formulate for real ℓ an integral equation for the amplitude of a standard type, whose solution is unique and which obeys Maximal Analyticity of the Second Degree.

V. CROSSING SYMMETRIC REGGE REPRESENTATION AND THE STRIP APPROXIMATION

We now discuss the dynamical equations within the framework of a specific model, namely the strip approximation as formulated in CJ. Our object here will be to examine the Crossing Symmetric Regge representation which is the basis for the strip approximation to see that it conforms to all reasonable physical requirements and that it is consistent with the basic approximation scheme. The object of the strip approximation is

to determine an approximate representation for $B_\ell^P(s)$ in equation (II. 8) . One reason for discussing the strip approximation at this point is to provide a concrete example for discussing the asymptotic behavior of Regge parameters in section VI.

Having already shown in previous sections that our basic equation can be given meaning in the exact case and that it is an integral equation of the combined Wiener-Hopf-Fredholm type, the steps which follow merely approximate the exact version of the equation. The advantage of this point of view is that we shall immediately be able to compare the exact and approximate statements of the problem to see that the approximate cases also possess unique mathematical solutions.

The input of our problem $B_\ell^P(s)$ is determined by S-matrix elements in the t and u channels (using the usual Mandelstam variables), the inelastic amplitudes in the s-channel, and the elastic s-channel amplitudes insofar as they contribute to the left-hand cut. The elastic scattering amplitude in the s-channel is then computed from this information by means of the dynamical equation (II. 8). All the needed information for our input just listed is never in practice at our disposal. In fact it often occurs that some of the S-matrix elements we require in the t and u channels are identical to those we are proposing to compute in the s-channel. This situation gives us the famous "bootstrap" phenomenon whereby the input amplitudes generate themselves. The dynamical content of the theory results from requiring the input and output amplitudes to coincide.

In this strange arrangement, we know neither the answer or the input but hope to find them both by requiring self-consistency. In practice, this is achieved by first finding a simple representation for the important part of $B_\ell^P(s)$ in terms of a few parameters or unknown functions, then doing the calculation and determining the parameters or unknown functions at the end by requiring agreement of the computed amplitude with the input.

Representing $B_\ell^P(s)$ by a few leading Regge pole terms in the t and u channels appears to be the best parameterization of the input yet discovered. These terms include the effects of resonances in the crossed-channels which dominate the nearby portion of the left-hand cut plus correctly characterizing the asymptotic behavior on the left and right hand cuts. Most previous calculations have been content with representing correctly only the nearby part of the left-hand cut, and ignoring inelastic effects (such as keeping our term of a polynomial expansion in the crossed channel as was proposed in the original work by Chew and Mandelstam[1]). Even admitting that the Regge parameterization is desirable, there is still the question remaining of what form the Regge representation should take. We shall examine here the one proposed by CJ and compare it with one suggested earlier by Khuri.[34]

What we seek is an approximate representation of the full amplitude of the form

$$A(s,t,u) \approx \sum_i \left[R_i^{t_1}(s,t) + \xi_i R_i^{u_1}(s,u)\right]$$

$$+ \sum_i \left[R_j^{s_1}(t,s) + \xi_j R_j^{u_1}(t,u)\right] \qquad \text{(V. 1)}$$

$$+ \sum_k \left[R_k^{s_1}(u,s) + \xi_k R_k^{t_1}(u,t)\right]$$

where we have a sum over the leading Regge pole terms in the s, t, and u channels respectively. (The $\xi_{i,j,k}$ are signature factors and we have used the notation in CJ.) The strip regions in which the various terms of (V. 1) are assumed to dominate the amplitude are shown in figure 10. These regions include the low energy range of all three channels and the high energy domain near the forward and backward directions. The companion diagram figure 11 shows the corresponding regions where the Mandelstam double spectral functions are dominated by Regge pole terms. Our $B_\ell^P(s)$ input is to be determined by the t and u Regge terms from (V. 1) as well as the left-hand cut contribution from the s term.

We now list the desired properties of our Regge representation (V. 1) .

1) Near the resonances in each channel the expression should go over to the usual Breit-Wigner form with the correct position and width. This means that in the angular momentum plane there should be a pole at $\ell = \alpha(s,t,$ or $u)$ in the amplitude with the correct residue $\beta(s,t,$ or $u)$.

2) Each Regge term should give the correct asymptotic behavior in the strip region in which it dominates. For example, the s-channel term must have a behavior $c_i(s)\, t^{\alpha_i(s)}$ as $t \to \infty$, where the power and the coefficient are correct.

3) No spurious poles are permitted in the ℓ-plane to the right of $\mathrm{Re}\,\ell = -\frac{1}{2}$. Spurious poles which approach the physical region are obviously unwanted and have the effect of distorting the left hand cut.

4) Each Regge term should satisfy the Mandelstam representation with a double-spectral-function characteristic of the strip region in which it dominates. (See figure 11.)

5) Each Regge term should vanish asymptotically in a direction perpendicular to its strip. Thus a s-channel Regge term gives the asymptotic behavior of the amplitude as $t \to \infty$, but is required to vanish as $s \to \infty$. This requirement is very important if we are to avoid double-counting in (V. 1) and also if we are to be certain that the part of the amplitude neglected in (V. 1) is small. This requirement means that a Regge term will contribute asymptotically in a direction perpendicular to its strip no more strongly than the background term of a Sommerfeld-Watson transform.

In order to establish the representation (V. 1) satisfying properties 1) through 5) we shall assume: a) the partial wave amplitude in each of the three channels is meromorphic with only Regge poles to the right of Re $\ell = -\frac{1}{2}$; b) the actual residues of the Regge poles, β, vanish asymptotically at least as fast as the inverse square-root of energy, to within logarithmic factors; c) in order for the specific representation we discuss to satisfy requirement 3), all Regge poles which reach the right half ℓ-plane must restrict their movement in the ℓ-plane to the right of Re $\ell = -\frac{1}{2}$; d) both γ (the reduced residue) and α are real analytic functions cut from threshold to $+\infty$.

It may be possible to invent a representation (V. 1) which dispenses with assumption c), however it appears quite possible in the CJ model that the equation will actually generate solutions having property c).

We now show that the representation given in CJ has the properties required. We look at $R_i^{t_1}(s,t)$ defined by

$$R_i^{t_1}(s,t) = \frac{1}{2}\,[2\alpha_i(s) + 1]\,\gamma_i(s)(-q_s^{\,2})^{\alpha_i(s)}$$

$$\times \int_{t_1}^{\infty} \frac{dt'}{t' - t}\, P_{\alpha_i(s)}\,(-1 - t'/2q_s^{\,2}) \qquad \text{(V. 2)}$$

where $\gamma_i(s)$ is the actual residue $\beta_i(s)$ divided by $(q_s^2)^{\alpha_i(s)}$ and $q_s^2 = s/4 - 1$. Equation (V. 2), as it stands, is well-defined for $\alpha_i(s) < 0$, and is to be determined in other regions by analytic continuation. We see immediately by inspection that $R_i^{t_1}(s,t)$ satisfies property (4), having a double-spectral-function with asymptotes $s = s_0$, $t = t_1$.

Using the dispersion relation for Legendre functions of complex order, we may rewrite equation (V. 2)

$$R_i^{t_1}(s,t) = \frac{1}{2}\,[2\alpha_i(s) + 1]\,\gamma_i(s)\,(-q_s^2)^{\alpha_i(s)}$$

$$\times \left\{ \frac{-\pi}{\sin \pi\,\alpha_i(s)}\, P_{\alpha_i(s)}\left(1 + \frac{t}{2q_s^2}\right) + \int_{-1-\frac{t_1}{2q_s^2}}^{1} dz'\, \frac{P_{\alpha_i(s)}(z')}{z' + 1 + \frac{t}{2q_s^2}} \right\} \tag{V. 3}$$

The first term in (V. 3) is just the ordinary Regge pole formula which then has a pole in the angular momentum at $\ell = \alpha_i(s)$ with the correct residue, $\beta_i(s)$. As is well-known, the first term also possesses a spurious pole in the ℓ-plane at $\ell = -\alpha_i(s) - 1$, but as long as we make assumption (c) it will never reach the right half ℓ-plane. The integral term in (V. 3) has for fixed s, an asymptotic

t expansion consisting of integral powers of $1/t$. This means that this term can have at worst, a sequence of fixed poles in the ℓ-plane at the negative integers. Properties (1) and (3) are thus verified.

Asymptotic behavior in t for fixed s is clearly governed by the first term of (V. 3) and has the correct form required by property (2).

For the asymptotic properties perpendicular to the strip we must look at the second term of (V. 3), which for large s and fixed t diverges at the lower limit of integration. In this neighborhood, we can write

$$\int_{-1-\frac{t}{2q_s^2}}^{1} dz' \frac{P_{\alpha_i(s)}(z')}{z' + 1 + \frac{t}{2q_s^2}} \underset{\substack{s\to\infty \\ t \text{ fixed}}}{\approx}$$

$$\text{const.} \int_{-1-\frac{t_1}{2q_s^2}} dz' \frac{\ell n(z' + 1)}{z' + 1 + \frac{t}{2q_s^2}} \propto \ell n^2 s \qquad \text{(V. 4)}$$

and thus

$$R_i^{t_1}(s,t) \underset{\substack{s\to\infty \\ t \text{ fixed}}}{\approx} \text{const.}\ \beta_i(s)\ \ell n^2 s \qquad \text{(V. 5)}$$

With assumption (b) , this establishes property (5) .

We now wish to verify that equation (V. 1) constitutes a good approximation to the amplitude in the sense that the remainder of the amplitude (presumably depending almost exclusively on portions of the double-spectral function not shaded in Figure 12) vanishes asymptotically in each direction at least as fast as the inverse square root of the energy-variable. This fact follows from assumption (a) .

To carry out the proof, we break the amplitude up into the contributions coming from each double-spectral-function. We consider $A_{st}(s,t)$ arising from the (s,t) double-spectral-function. The partial-wave amplitudes which result from $A_{st}(s,t)$ by projection in the s and t channels possess the same Regge poles in those channels as the full amplitude $A(s,t)$. We now perform a Sommerfeld-Watson transformation on $A_{st}(s,t)$ in the t channel; when this is accomplished we replace the ordinary Regge pole term with $R_j^{s_1}(t,s)$, incorporating the difference into the background. Thus we write[35]

$$A_{st}(s,t) = A_{st}^{Bt}(s,t) + R_j^{s_1}(t,s) \tag{V. 6}$$

the first term on the right representing the t background term. Asymptotically in s, we may write

$$A_{st}^{Bt}(s,t) \underset{\substack{s\to\infty \\ t \text{ fixed}}}{\lesssim} \frac{\text{const.}}{\sqrt{s}} \tag{V. 7}$$

We can now perform a Sommerfeld-Watson transformation of (V. 6) in the s-channel and recalling the asymptotic t-behavior of the second term

$$R_j^{s_1}(t,s) \xrightarrow[\substack{t\to\infty \\ s \text{ fixed}}]{} \beta_j(t)\, \ell n^2 t \tag{V. 8}$$

we see that with assumption (b) this term can be identified as an s-channel background term. Finally, therefore, we may write

$$A_{st}(s,t) = A_{st}^{Bts}(s,t) + R_i^{t_1}(s,t) + R_j^{s_1}(t,s) \qquad \text{(V. 6)}$$

where the first term on the right of (V. 6) must vanish asymptotically the inverse square root in either s or t. An identical argument may be carried out for the segments of $A(s,t)$ coming from the other two double-spectral-functions and the validity of the representation (V. 1) is established.

Khuri[34] has recently proposed an alternate Regge pole formula to equation (V. 2) . The two formulas differ in an important way and we now wish to compare them. The link between (V. 2) and the Khuri formula is most easily established by replacing $P_{\alpha_i(s)}$ in (V. 2) by its asymptotic expansion in t' .

Assuming $\alpha_i(s) > -\frac{1}{2}$ we have

$$R_i^{t_1}(s,t) = \frac{1}{2}\,[2\alpha_i(s) + 1]\,\gamma_i(s)\,(-q_s^{\,2})^{\alpha_i(s)}$$

$$\times \int_{t_1}^{\infty} \frac{dt'}{t' - t} \sum_{n=0}^{\infty} c_n(s) \left(\frac{-t'}{2q_s^{\,2}}\right)^{\alpha_i(s)-n} \qquad \text{(V. 7)}$$

Khuri's Regge term, $\tilde{R}_i^{t_1}(s,t)$ results from taking only a finite number of terms in (V. 7) determined by the maximum excursion of $\alpha_i(s)$ for real s. Specifically, Khuri drops those terms which decrease at infinity at least as fast as the inverse square-root of t' for all real values of s. The correct asymptotic t-behavior is clearly preserved in this case and the pole term is correctly present satisfying our properties (1) and (2) .

The important difference between (V. 7) and (V. 2) is in the asymptotic s-behavior.[34] Equation (V. 7) contains the feature that the asymptotic s-behavior depends as follows upon the number of terms N which are retained in the sum:

$$\tilde{R}_i^{t_1}(s,t) \xrightarrow[\substack{s\to\infty \\ t \text{ fixed}}]{} \text{const.}\ \beta_i(s)\,(q_s^{\,2})^{N-\alpha_i(s)} \qquad \text{(V. 8)}$$

We have neglected here the $c_n(s)$ which modify the answer by no more than a square-root factor of s.

In order to satisfy property (5) , and also the condition that the remainder of the amplitude after the Khuri terms are removed vanishes in all directions like the background term, we must make different assumptions about the asymptotic behavior of the $\beta_i(s)$ than were made in (b) . Specifically, in the Khuri case the $\beta_i(s)$ must generally vanish

more strongly, the precise power required depending upon the maximum rightward excursion of the Regge pole $\alpha_i(s)$. This is the heart of the distinction between the two approaches, namely, a difference in the assumptions about the asymptotic behavior of the residues.

We find no reason to support the notion that the asymptotic behavior of the residues is linked to the number of resonances or bound states produced by a given Regge trajectory, and so we tend to favor assumption (b) made in CJ, and the use of expression (V. 2) . The estimates given in the next section of the asymptotic behavior of the Regge parameters based upon the dynamical equations also appear to support assumption (b) . Although a potential theory argument on this point must be considered weak, we note that in the case of non-relativistic potential scattering there is no correlation between the asymptotic behavior of the residue and the rightward excursion of the Regge trajectory.

VI. ASYMPTOTIC BEHAVIOR OF REGGE PARAMETERS

The dynamical equations we are discussing are particularly convenient for determining Regge trajectories $\ell = \alpha(s)$ through solution of the equation

$$D_\ell(s) = 0 \qquad \text{(VI. 1)}$$

This can be solved for $s < s_0$ where all quantities involved are real.

Having determined $\alpha(s)$, the residue may then be calculated. In fact the self-consistency requirement of the bootstrap calculation mentioned in the previous section is satisfied by matching the Regge parameters which go into determining $B_\ell^P(s)$ with those computed using (VI. 1). Of immediate interest is the question of the asymptotic behavior of trajectories and residues.

We have seen in the previous section that a consideration of this point is quite important in attempting to set up a practical bootstrap calculation based on the dynamical equations. We now wish to ask what general statements can be made on this question both in model problems and in the exact case.

We shall see that not too much can be said on this matter but just asking the question will lead us to some important insights into the dynamical equations.

First, we shall discuss the asymptotic behavior of $\alpha(s)$ which is determined by the solutions of (VI. 1) as $s \to \infty$. We know $D_\ell \to 1$ as $s \to \infty$, so it appears reasonable that if the top-lying trajectories approach distinct limits as $s \to \infty$, this limit must be a fixed infinite-type ℓ-singularity of $D_\ell(s)$. To illustrate we consider the model case of CJ where the mechanism of a fixed simple pole in ℓ is discussed. In this case we can write for $D_\ell(s)$

$$D_\ell(s) = 1 + \frac{1}{\pi[\ell - \alpha(\infty)]} \int_{s_0}^{s_1} ds' \frac{r(s',\ell)}{s' - s} \qquad \text{(VI. 2)}$$

where $r(s,\ell)$ is regular at $\ell = \alpha(\infty)$. Solving equation (VI. 1) in the high-energy limit gives

$$\alpha(s) - \alpha(\infty) = d/s + \text{terms of order } 1/s^2$$

$$d = \frac{1}{\pi} \int_{s_o}^{s_1} ds' \; r(s', \alpha(\infty)) \qquad \text{(VI. 3)}$$

It is argued in CJ that the fixed poles which occur arise from the Fredholm character of the basic equation (II. 8). (Actually the Fredholm part of (II. 8) is given by (IV. 7) .) In this problem it is important to note that the kernel is actually a function of the eigen-parameter ℓ, rather than being a simple, multiplicative factor. In regions where $K_\ell(s,s')$ is locally an analytic function of ℓ, this cannot change the nature of the eigenvalue problem for $K_\ell'(s,s')$ can be expanded in these regions to give in a neighborhood, the usual, linear dependence on ℓ. This analytic dependence of the kernel on the parameter ℓ, however, modifies the solution as a function of ℓ from what would be expected in the usual Fredholm case and it becomes an important problem to study the singularities of the kernel in ℓ. In the standard case the eigen-parameter simply multiplies the kernel and the solution possesses poles

in the ℓ-plane given by the zeroes of the Fredholm determinant, which is a holomorphic function. These poles possess no point of accumulation in the finite plane.

In our case, the kernel $K_\ell'(s,s')$ will generally possess poles as well as branch points and the above picture becomes considerably more complicated. Near fixed poles of the kernel in ℓ, we expect an accumulation of Fredholm poles since the kernel becomes unbounded in such a neighborhood. Branch points in the kernel may be transmitted more or less directly to the solution or such singularities may be modified in the process depending on the singularity-type. In any event the singularity structure of the kernel $K_\ell'(s,s')$ in ℓ will clearly play an important role in determining the nature of the dynamical solutions and as already discussed we also expect it to play a central role in determining the asymptotic behavior of the Regge parameters.

The Fredholm kernel $K_\ell'(s,s')$ has essentially the same singularity structure as $B_\ell^P(s)$ does in the ℓ-plane and we shall begin our discussion by locating some of the important singularities of $B_\ell^P(s)$. We shall begin with the model case because it is somewhat simpler. As shown in CJ, if the residues vanish sufficiently fast at infinity the leading singularity will be a pole at $\ell = -1$. This fixed pole is related to the Gribov-Pomeranchuk phenomenon[36] and occurs as result of a pole in the left-hand cut discontinuity. In the case considered where the residues vanish strongly at infinity, this is the only relevant singularity. The unbounded character of the function near $\ell = -1$ is expected to produce an accu-

mulation point for Fredholm poles and if these poles are distinct we may focus our attention on the one standing farthest to the right at $\ell = \alpha(\infty)$. The pole produced in the solution of the integral equation for $N_\ell(s)$ is carried over to $D_\ell(s)$ by the relation

$$D_\ell(s) = 1 - \frac{1}{\pi} \int_{s_0}^{s_1} ds' \, \frac{\rho_\ell(s') \, B_\ell^P(s') \, N_\ell(s')}{s' - s} \qquad \text{(VI. 4)}$$

If we assume a simple pole at $\ell = \alpha(\infty)$, the situation of equation (VI. 2) is produced and the asymptotic behavior (VI. 3) is found for $\alpha(s)$. Note that the Fredholm pole occurs in both N and D, thereby cancelling out in the complete amplitude. This is as it should be, for the complete amplitude has no fixed pole at $\ell = \alpha(\infty)$. We also point out that $B_\ell^P(s)$ is, in the model case, regular at $\ell = \alpha(\infty)$. To determine the corresponding asymptotic behavior for the reduced residue $\gamma(s)$ we use the fact

$$\gamma(s) = \left. \frac{N_{\alpha(s)}(s)}{\frac{dD_\ell(s)}{d\ell}} \right|_{\ell = \alpha(s)} \qquad \text{(VI. 5)}$$

We can expand both N and D in a Laurent series about $\ell = \alpha(\infty)$,

$$D_\ell(s) = 1 + \frac{r_D(s)}{\ell - \alpha(\infty)} + \sum_{n=0}^{\infty} f_n^D(s) \; [\ell - \alpha(\infty)]^n \qquad \text{(VI. 6)}$$

$$N_\ell(s) = \frac{r_N(s)}{\ell - \alpha(\infty)} + \sum_{n=0}^{\infty} f_n^N(s) \; [\ell - \alpha(\infty)]^n. \qquad \text{(VI. 7)}$$

For our purposes it will be convenient to write the equation for $N_\ell(s)$ as

$$N_\ell(s) = D_\ell(s)\, B_\ell^P(s) + \frac{1}{\pi} \int_{s_0}^{s_1} ds' \, \frac{B_\ell^P(s')\, \rho_\ell(s')\, N_\ell(s')}{s' - s}$$

(VI. 8)

Thus inserting (VI. 7) into (VI. 8)

$$N_\ell(s) = D_\ell(s)\, B_\ell^P(s) + \frac{1}{\pi} \frac{1}{[\ell - \alpha(\infty)]} \int_{s_0}^{s_1} ds' \, \frac{B_\ell^P(s')\, \rho_\ell(s')\, r_N(s')}{s' - s}$$

(cont.)

$$+ \frac{1}{\pi} \sum_{n=0}^{\infty} [\ell - \alpha(\infty)]^n \int_{s_0}^{s_1} ds' \frac{B_\ell^P(s') \rho_\ell(s') f_n^N(s')}{s' - s}$$

(VI. 9)

The functions $B_\ell^P(s)$ and $\rho_\ell(s)$ also have expansions about the point $\ell = \alpha(\infty)$:

$$B_\ell^P(s) = \sum_{n=0}^{\infty} b_n(s)[\ell - \alpha(\infty)]^n \qquad \text{(VI. 10)}$$

$$\rho_\ell(s) = \sum_{n=0}^{\infty} \rho^n(s) [\ell - \alpha(\infty)]^n$$

Substituting $\ell = \alpha(s)$ into (VI. 9), we keep the leading behavior in s as $s \to \infty$. We find the first term of (VI. 9) vanishes because $D_{\alpha(s)}(s) = 0$, giving

$$N_{\alpha(s)}(s) \underset{s\to\infty}{\approx} -\frac{1}{s\pi} \frac{c}{\alpha(s) - \alpha(\infty)}$$

$$c = \int_{s_0}^{s_1} ds' \, b_0(s') \, \rho_0(s') \, r_N(s') \qquad \text{(VI. 11)}$$

We also have

$$\left. \frac{dD_\ell(s)}{d\ell} \right|_{\ell=\alpha(s)} = - \frac{r_D(s)}{[\alpha(s) - \alpha(\infty)]^2} + \sum_{n=0}^{\infty} n \, f_n^{\,D}(s) \, [\alpha(s) - \alpha(\infty)]^{n-1}$$

$$\text{(VI. 12)}$$

$$\underset{s\to\infty}{\approx} - \frac{r_D(s)}{[\alpha(s) - \alpha(\infty)]^2}$$

$$r_D(s) \underset{s\to\infty}{\approx} \frac{\text{const.}}{s}$$

Recalling (VI. 3) we have finally

$$\gamma(s) \underset{s\to\infty}{\approx} -\frac{c}{\pi s}\,\frac{\alpha(s)-\alpha(\infty)}{r_D(s)} = \frac{\text{const.}}{s} \qquad \text{(VI. 13)}$$

Now we ask to what extent considerations like the foregoing can be expanded to include the exact equations. First of all, in the exact case we expect to find a singular behavior for $\alpha(s)$ in the neighborhood of $s = \infty$ due to the branch point. However, with a simple pole at $\ell = \alpha(\infty)$ in $D_\ell(s)$, equation (VI. 2) shows it would be inconsistent to have anything but inverse <u>integral</u> powers of s in the asymptotic behavior of $\alpha(s)$. One is naturally led to ask if multiple poles could develop at $\ell = \alpha(\infty)$ in our Fredholm equation. The answer to the question is apparently yes because the kernel $K_\ell(s,s')$ is not symmetrical. When the kernel is not symmetrical there is no assurance it can be diagonalized and such a failure provides the opportunity for multiple poles to occur.

We can illustrate the occurrence of multiple poles for non-symmetrical kernels by reference to a simple example in linear algebraic equations. Consider the linear equations

$$\lambda x = y + Lx$$

$$x = \begin{pmatrix} x_1 \\ x_2 \end{pmatrix} \quad y = \begin{pmatrix} y_1 \\ y_2 \end{pmatrix} \quad L = \begin{pmatrix} 1 & 1 \\ 0 & 1 \end{pmatrix} \tag{VI. 14}$$

This equation is readily seen to have a double eigenvalue for $\lambda = 1$, but there is only one eigen vector $\begin{pmatrix} 1 \\ 0 \end{pmatrix}$. Thus L cannot be diagonalized and the solution to (V. 3) has a double pole when $\lambda = 1$. Because of the complete correspondence which exists between systems of linear algebraic and Fredholm integral equations, we may infer that the above result is quite general and we may expect to find, for the case of non-symmetric kernels, k^{th} order Fredholm poles.(37)

In the case of kth order poles, reasoning similar to that leading to equation (VI. 3) gives

$$\alpha(s) - \alpha(\infty) = \text{const.}\ (-s)^{-\frac{1}{k}} \tag{VI. 15}$$

In the model problem already discussed, the Fredholm kernel is also non-symmetrical and we may ask if k^{th} order Fredholm poles may occur also in this case. There appears no reason to exclude this pos-

sibility, in general, and if it occurs the asymptotic behavior of $\gamma(s)$ is again the same as for $\alpha(s)$,

$$\gamma(s) \underset{s\to\infty}{\approx} \text{const. } (-s)^{-\frac{1}{k}} \tag{VI. 16}$$

In order for any of the previous reasoning an asymptotic behavior to be valid, $B_\ell^P(s)$ --that is, the Fredholm kernel--must be regular at $\ell = \alpha(\infty)$, permitting a Laurent expansion of the solution about this point. In the model case, it is true that $B_\ell^P(s)$ is regular at $\ell = \alpha(\infty)$, but we shall see that for the exact case $B_\ell^P(s)$ is generally singular at $\ell = \alpha(\infty)$. However, by modifying our equation in this latter case we shall be able to reinstate the asymptotic arguments for $\alpha(s)$ but the same modification will cause the $\gamma(s)$ asymptotic prediction to slip away from us.

We now list the prominent singularities of $B_\ell^P(s)$ in the ℓ-plane (in the exact problem).

(a) Similarly to $D_\ell(s)$, $B_\ell^P(s)$ has branch points at $\ell = \alpha(s)$ and $\ell = \alpha^*(s_1)$ as shown in figure 12 . The branch cut is indicated as well as the physical ℓ sheet. A Regge trajectory is shown for $-\infty \leqslant s \leqslant \infty$. Much the same as before with $N_\ell(s)$, we see that $B_\ell^P(s)$ contains the Regge pole on the physical ℓ sheet if $s > s_1$ but does not contain it if $s < s_1$.

(b) The fixed Gribov-Pomeranchuk pole[36] at $\ell = -1$ is present in $B_\ell^P(s)$. In a sense this singularity is independent of the other singularities which arise in association with right-hand energy cut and it occurs on both sides of the cut in ℓ shown in figure 12.

(c) The Mandelstam cuts[24] which arise from the enforcement of unitarity beyond the inelastic threshold at $s = s_1$ will be present in $B_\ell^P(s)$. We return to a discussion of this point later.

(d) In general $B_\ell^P(s)$ will have a fixed singularity at $\ell = \alpha(\infty)$.

We turn now to a discussion of the singularity at $\ell = \alpha(\infty)$, which is of crucial importance to the arguments presented so far in this section. The presence of such a singularity means that neither the kernel nor the inhomogeneous term of our Fredholm equation possess Taylor expansions about this point, invalidating our previous arguments about the asymptotic behavior of $\alpha(s)$. (As pointed out earlier, the model case is still all right because $B_\ell^P(s)$ in this case is not singular at $\ell = \alpha(\infty)$). To see the presence of the singularity at $\ell = \alpha(\infty)$ we consider equation (III. 10),

$$B_\ell(s) = B_\ell^P(s) + \frac{1}{\pi} \int_{s_0}^{s_1} ds' \, \frac{\mathrm{Im}\, B_\ell(s')}{s' - s} + \frac{\Gamma(\ell)}{s - s_R(\ell)} \tag{VI. 17}$$

where

$$\Gamma(\ell) = -\frac{\gamma(s_R(\ell))}{\alpha'(s_R(\ell))}$$

The complete amplitude $B_\ell(s)$ will be regular at $\ell = \alpha(\infty)$ and so will the second term in (VI. 17), which is only singular at $\ell = \alpha(s_1)$ and $\ell = \alpha^*(s_1)$. The last term of (VI. 17) will, however, generally be singular at $\ell = \alpha(\infty)$, the singularity-type depending upon the asymptotic behavior of $\gamma(s)$. This requires that $B_\ell^P(s)$ have a compensating singularity in order that $B_\ell^P(s)$ be regular. Let us suppose in accordance with the earlier discussed multiple-pole mechanism that

$$s_R(\ell) \underset{\ell\to\alpha(\infty)}{\approx} \frac{\text{const.}}{[\ell - \alpha(\infty)]^k} \qquad \text{(VI. 18)}$$

where K is a positive integer.

Then it follows that

$$\alpha'(s_R(\ell)) \underset{\ell\to\alpha(\infty)}{\approx} \text{const. } [\ell - \alpha(\infty)]^{k+1} \qquad \text{(VI. 19)}$$

If $\gamma(s)$ behaves at infinity as

$$\gamma(s) \xrightarrow[s\to\infty]{} \frac{\text{const.}}{s^P} \tag{VI. 20}$$

where P is an arbitrary, real power then

$$\gamma(s_R(\ell)) \underset{\ell\to\alpha(\infty)}{\approx} \text{const. } [\ell - \alpha(\infty)]^{kP} \tag{VI. 21}$$

So finally we have

$$\frac{\Gamma(\ell)}{s - s_R(\ell)} \underset{\ell\to\alpha(\infty)}{\approx} \text{const. } [\ell - \alpha(\infty)]^{kP-1} \tag{VI. 22}$$

Thus generally (VI. 22) and also the kernel will be singular at $\ell = \alpha(\infty)$ and we are prevented from making an asymptotic argument for $\gamma(s)$. We note here, however, a certain self-consistency of the

model problem. In this case we know by construction that $B_\ell^P(s)$ is regular at $\ell = \alpha(\infty)$ and equation (VI. 16) indicates that $P = mk$ where m is a positive integer. Thus (VI. 22) is also regular in the model case and the machanism is consistent.

Going back to the exact case, we can avoid a singularity in the kernel at $\ell = \alpha(\infty)$ by defining

$$\tilde{B}_\ell^P(s) = B_\ell^P(s) + \frac{\Gamma(\ell)}{s - s_R(\ell)} \qquad \text{(VI. 23)}$$

which is regular at $\ell = \alpha(\infty)$. The integral equation (II. 8) for $N_\ell(s)$ can be derived where $B_\ell^P(s)$ is replaced by $\tilde{B}_\ell^P(s)$. Now, however, $\tilde{B}_\ell^P(s)$ possesses the Regge pole at $\ell = \alpha(s)$ on the physical ℓ sheet below s_1 and the first term of (VI. 8) no longer vanishes when we set $\ell = \alpha(s)$. Therefore, the asymptotic arguments for $\gamma(s)$ cannot be carried through. This is really no surprise. It is the asymptotic behavior of $\gamma(s)$ which is responsible for the singularity in $B_\ell^P(s)$ at $\ell = \alpha(\infty)$ and it can hardly be a matter of astonishment that eliminating the singularity at $\ell = \alpha(\infty)$ in the kernel also eliminates our ability to predict the asymptotic behavior of $\gamma(s)$.

We should point out that our basic dynamical equation, as well as all the arguments of this section, may not hold for values of $\ell < -\frac{1}{2}$

The point is that an infinite number of Regge poles appear along the line $\mathrm{Re}\,\ell = -\frac{1}{2}$ when $s = s_0$. This phenomenon is a threshold effect discussed by Gribov and Pomeranchuk and arises from an infinite pile-up of Landau singularities.[39] It means there are an infinite number of zeroes for $D_\ell(s)$ at threshold. For $\ell < -\frac{1}{2}$ the equations <u>may</u> still have meaning, but one cannot be sure. For one thing the threshold behavior for the amplitude is not well understood for $\ell < -\frac{1}{2}$.

Be that as it may, there is the possibility mentioned earlier that the leading trajectories may very well terminate to the right of $\mathrm{Re}\,\ell = -\frac{1}{2}$, an assumption which we have made before in the previous section. Only detailed dynamical calculations can answer this question.

We return finally to a brief discussion of the effect of Mandelstam cuts on the asymptotic arguments given here. Mandelstam has shown that when one attempts to enforce unitarity in the inelastic region, cuts in the angular-momentum plane are produced which move with energy.[24] This means that our function $B_\ell^P(s)$ will have branch points in ℓ (and alternatively, branch points in the energy plane which move with ℓ). These cuts had no opportunity to appear in the model case but would be present in the exact problem.

An important characteristic of these branch cuts in angular-momentum is that they force the Gribov-Pomeranchuk essential singularities onto unphysical sheets in the ℓ-plane. Although a complete formulation of the dynamical equations in the presence of cuts is still lacking, one might still conjecture that since the essential singularities are still present,

the mechanism discussed here involving Fredholm poles might still produce the accumulation of Regge poles in these neighborhoods. Thus a model which correctly incorporates the Mandelstam cuts might still give essentially the same asymptotic behavior for trajectories and residues derived here.

However, a more detailed understanding of the cuts, the Gribov-Pomeranchuk singularities and the connection of these phenomena with problems involving spin seems requisite before the dynamical problem can be further advanced.

ACKNOWLEDGMENTS

The author is deeply grateful to Professor Geoffrey F. Chew, whose competent guidance and enthusiastic encouragement throughout the course of this work and over a period of several years have been an inspiration.

This work was done under the auspices of the U. S. Atomic Energy Commission.

REFERENCES AND FOOTNOTES

1. G. F. Chew and S. Mandelstam, Phys. Rev. 119, 467(1960); Nuovo Cimento 19, 752(1961).

2. M. Cini and S. Fubini, Ann. Phys. (N. Y.) 3, 358(1960).

3. A. V. Efremov, V. A. Meshcheryakov, D. V. Shirkov, and H. Y. Izu, Nucl. Phys. 22, 202(1961).

4. G. F. Chew and S. C. Frautschi, Phys. Rev. 123, 1478(1961).

5. D. Wong, Phys. Rev. 126, 1220(1962).

6. F. Zachariasen, Phys. Rev. Letters 7, 112(1962).

7. F. Zachariasen, C. Zemach, Phys. Rev. 128, 849(1962).

8. L. A. P. Balazs, Phys. Rev. 128, 1939(1962); Phys. Rev. 129, 872(1963).

9. G. F. Chew, Phys. Rev. 129, 2363(1963).

10. G. F. Chew and C. E. Jones, Lawrence Radiation Laboratory Report UCRL-10992, August, 1963 (to be published in Phys. Rev.), afterwards referred to as CJ.

11. S. Mandelstam, Phys. Rev. 112, 1344(1958).

12. W. Heisenberg, Z. Physik 120, 513 and 673(1943).

13. G. F. Chew and F. E. Low, Phys. Rev. 101, 1570(1956).

14. R. Karplus and M. Ruderman, Phys. Rev. 98, 771(1951).

15. M. L. Goldberger, Phys. Rev. 99, 979(1955).

16. See, for example, G. F. Chew, S-Matrix Theory of Strong Interactions (W. A. Benjamin Inc., New York, 1961).

17. L. Castillejo, R. H. Dalitz, and F. J. Dyson, Phys. Rev. 101, 453(1956).

18. M. Froissart, Phys. Rev. 123, 1053(1961).

19. T. Regge, Nuovo Cimento 14, 951(1959); 18, 947(1960). Also A. Bottino, A. M. Longoni, and R. Regge, Nuovo Cimento 23, 954(1962).

20. G. F. Chew and S. C. Frautschi, Phys. Rev. Letters, 7, 394(1962); 8, 41(1962).

21. G. F. Chew, Lawrence Radiation Laboratory Report UCRL-10786, April, 1963(unpublished).

22. J. R. Taylor, Phys. Rev. 127, 2257(1962).

23. A. Barut and D. Zwanziger, Phys. Rev. 127, 974(1962).

24. S. Mandelstam, preprint, University of Birmingham(1963).

25. A. Ahmadzadeh and I. Sakmar, Phys. Rev. Letters 11, 439(1963).

26. R. Omnes, Nuovo Cimento 8, 316(1958); 21, 524(1961).

27. Mandelstam has studied some of the general analyticity properties of partial-wave amplitudes in the energy and angular momentum variables using N/D equations which are related to the ones discussed here. See S. Mandelstam, Ann. Phys. 21, 302(1963).

28. H. Banerjee (preprint), Carnegie Institute of Technology, (1963).

29. N. Levinson, Kgl. Danske Videnskab, Selskab, Matt.-fys. Medd. 25, No. 9(1949).

30. G. F. Chew, Lectures on Strong Interaction Theory, Dept. of Mathematics and Theoretical Physics, University of Cambridge, (unpublished).

31. There is no pole in $N_\ell(s)$ because $D_\ell(s)$ has a zero at $s = s_R(\ell)$.

32. G. F. Chew, Phys. Rev. 130, 1264(1963).

33. A completely mathematical discussion of the application of the Wiener-Hopf technique to this and related problems will be published in a

separate paper by C. E. Jones and R. Omnes.

34. N. Khuri, Phys. Rev. Letters 10, 420(1963) and Institute for Advanced Study preprint(1963).

35. This line of argument is closely related to the one given by Khuri in the preceding reference.

36. V. N. Gribov and I. A. Pomeranchuk, Phys. Rev. Letters 2, 239(1962).

37. The author is grateful to R. Omnes for discussion on this point.

38. Equation (VI. 16) gives an upper limit on the decrease of $\gamma(s)$ at infinity. It may, in fact, go to zero faster.

39. V. N. Gribov and I. A. Pomeranchuk, Phys. Rev. Letters 9, 238(1962).

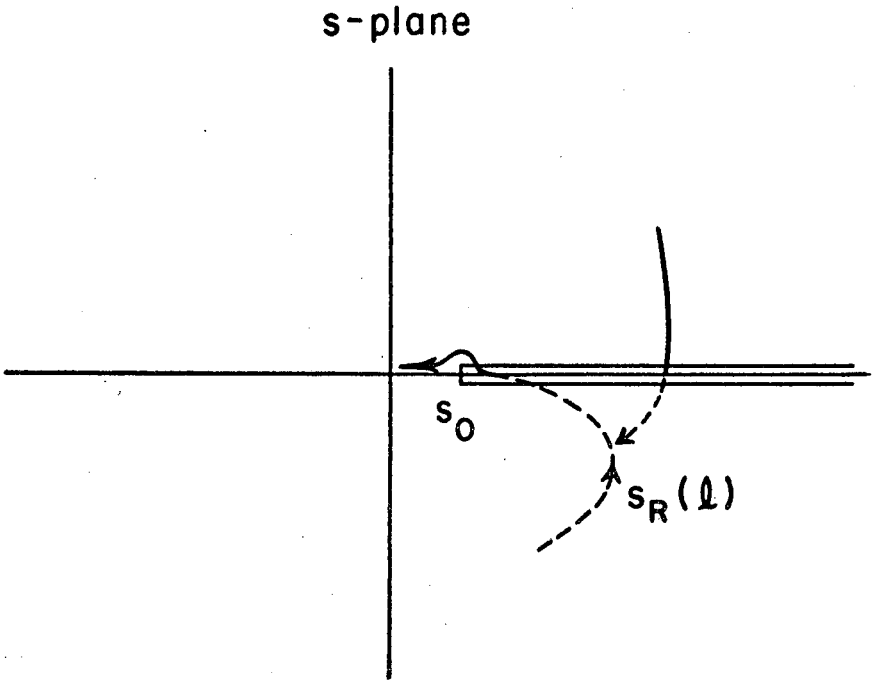

MU-32622

Fig. 1. Resonance pole on unphysical sheet of energy plane as a function of angular momentum.

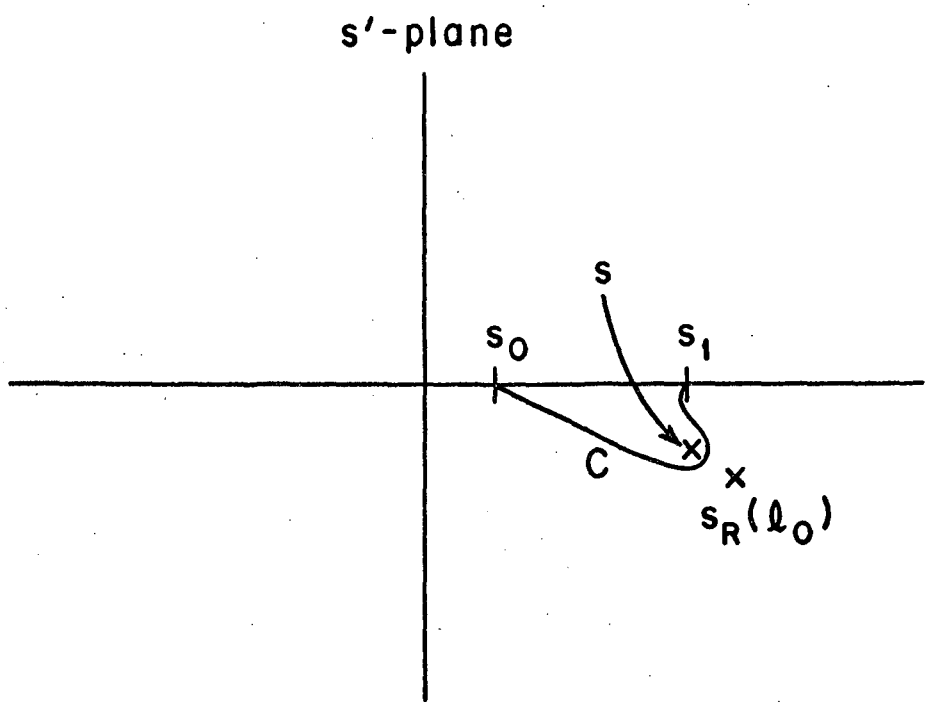

MU-32623

Fig. 2. D-function defined by contour integral over phase shift.

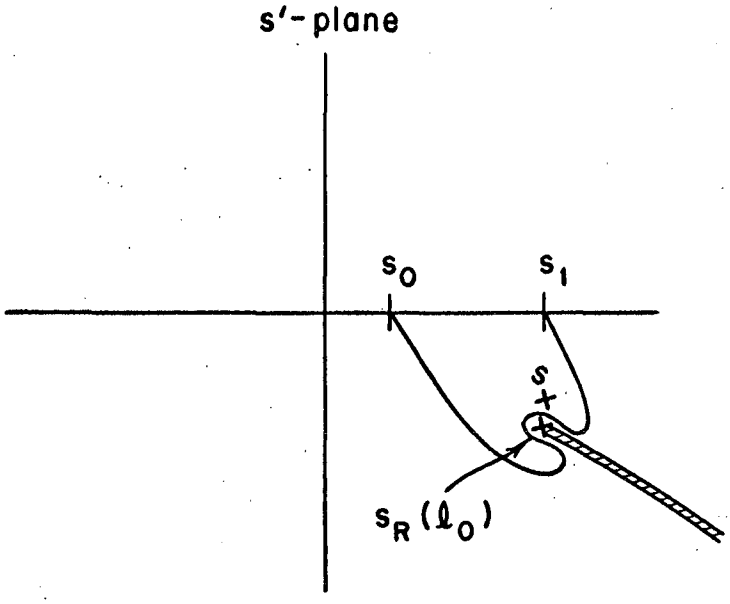

MU-32624

Fig. 3. Zeros of D-function corresponding to resonance poles.

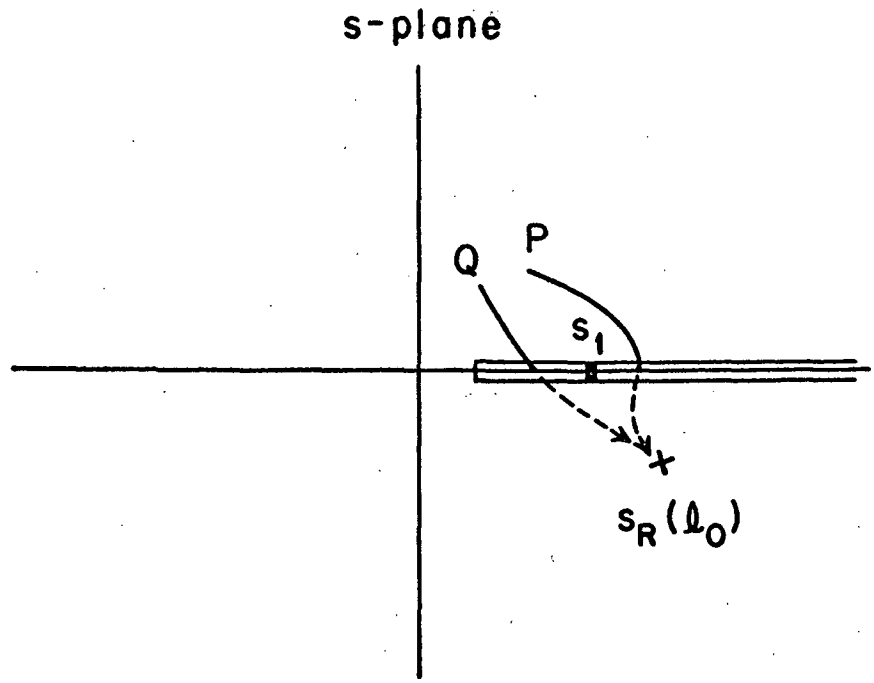

MU-32625

Fig. 4. Two paths of continuation to resonance pole in $B_\ell(s)$.

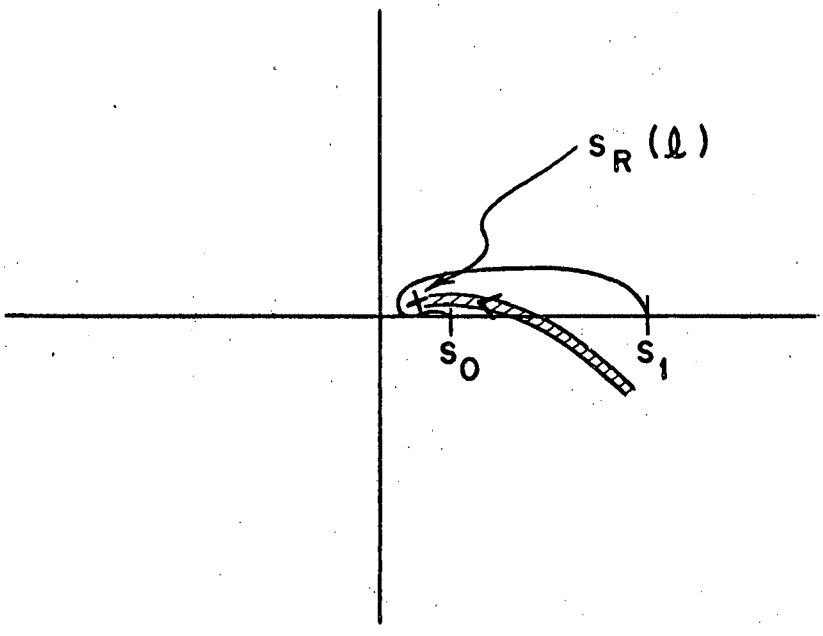

MU-32626

Fig. 5. Transition of resonance pole to bound state as angular momentum is decreased.

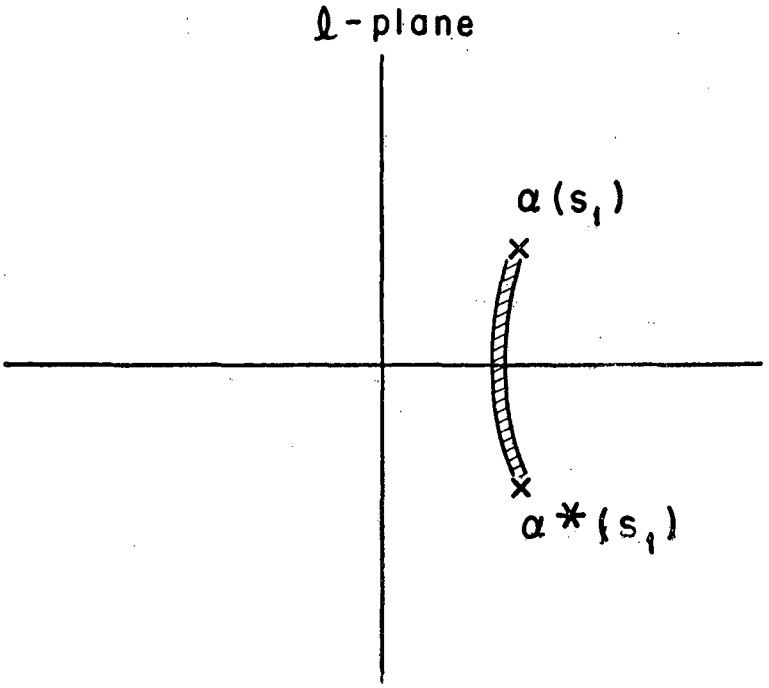

MU-32627

Fig. 6. Branch cut appearing in N and D .

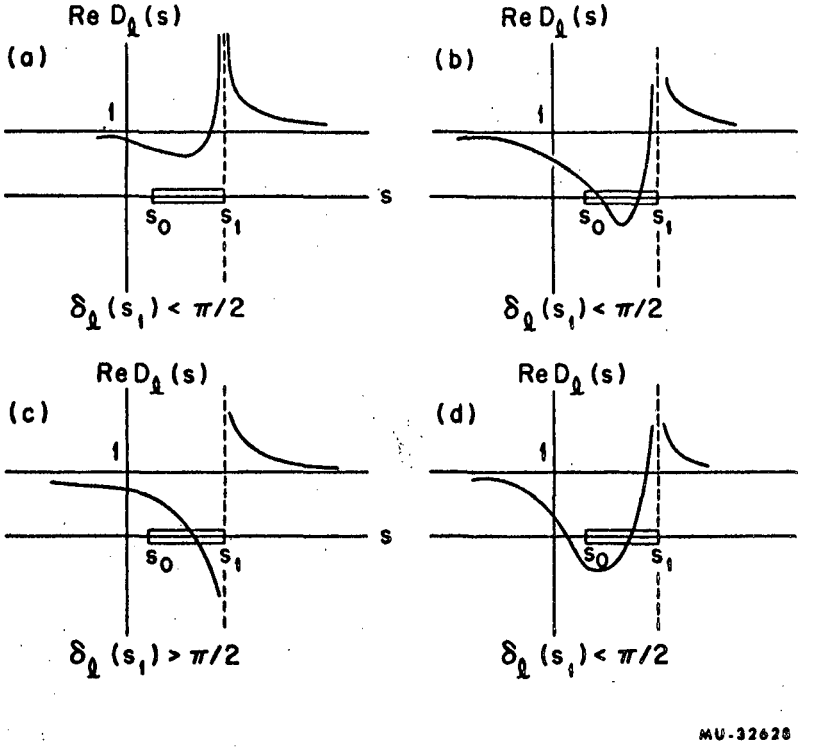

Fig. 7. Real $D_\ell(s)$ plotted for the cases:

(a) No resonances or bound states and $\delta_\ell(s_1) < \pi/2$,

(b) One resonance and $\delta_\ell(s_1) < \pi/2$,

(c) One resonance and $\delta_\ell(s_1) > \pi/2$, and

(d) Bound state and $\delta_\ell(s_1) < \pi/2$.

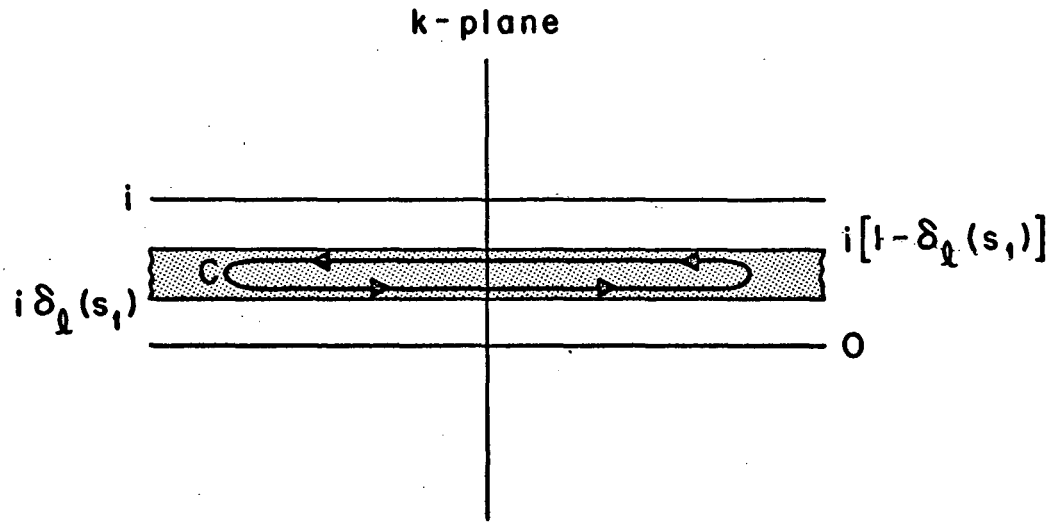

MU-32629

Fig. 8. Substrip of holomorphy for Fourier transforms when $\delta_\ell(s_1) < \pi/2$.

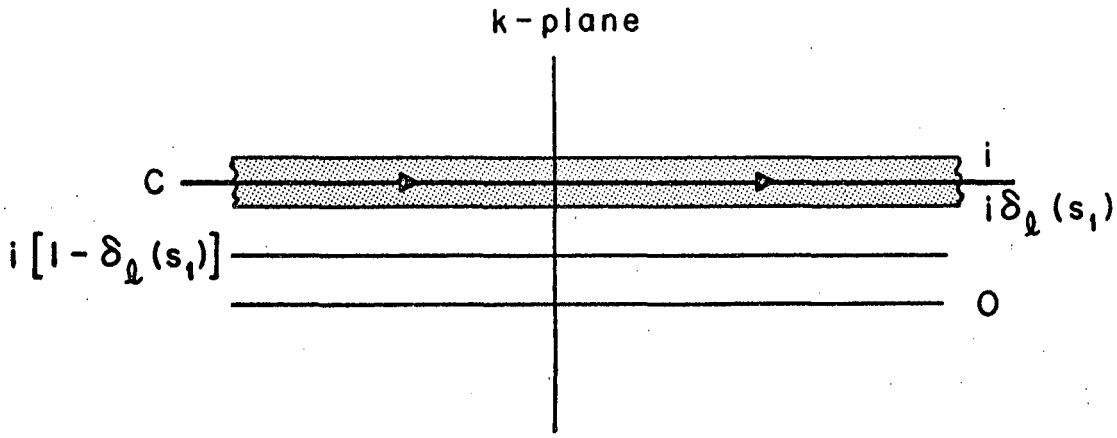

MU-32630

Fig. 9. Substrip of holomorphy of Fourier transforms when $\delta_\ell(s_1) > \pi/2$.

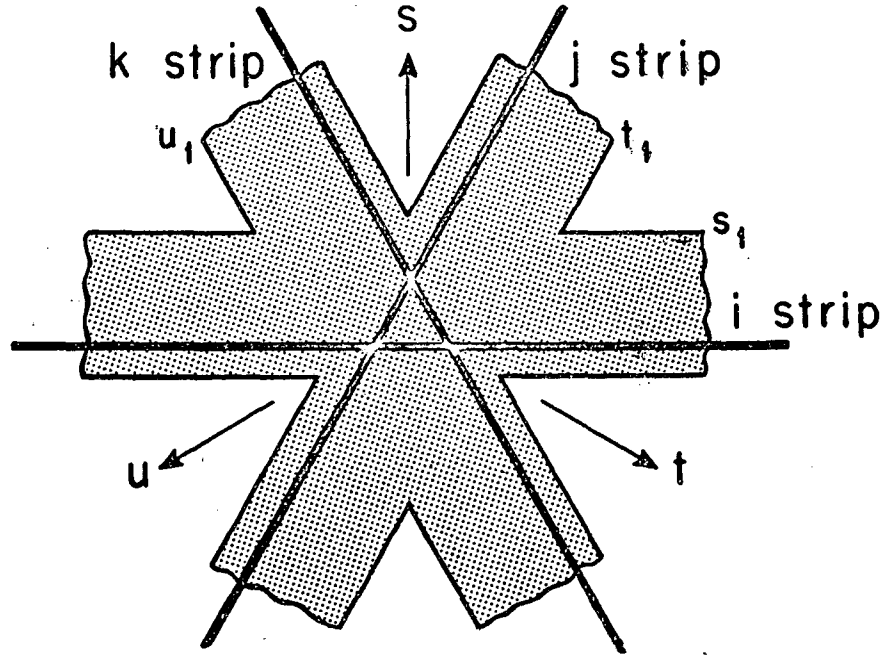

MU-32631

Fig. 10. Region of validity of strip approximation.

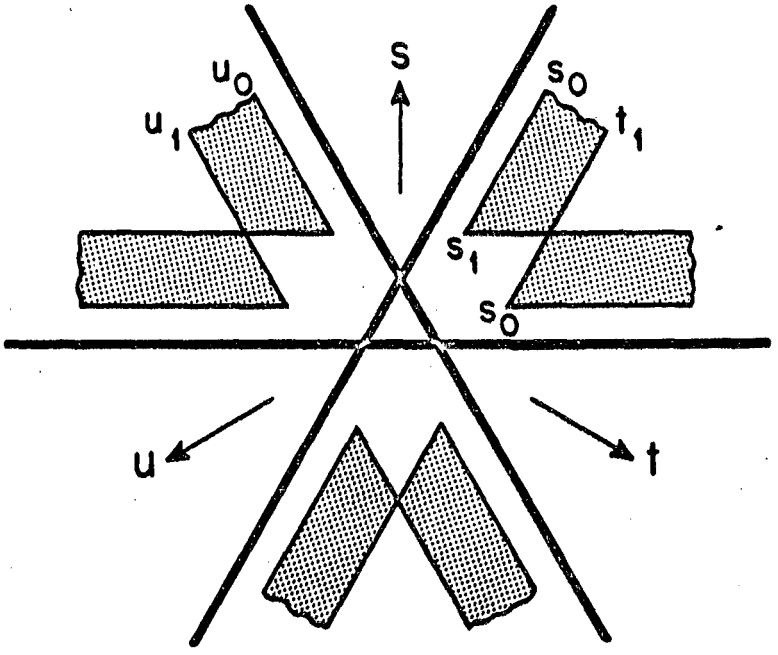

MU-32632

Fig. 11. Regions where Regge terms dominate the double-spectral functions.

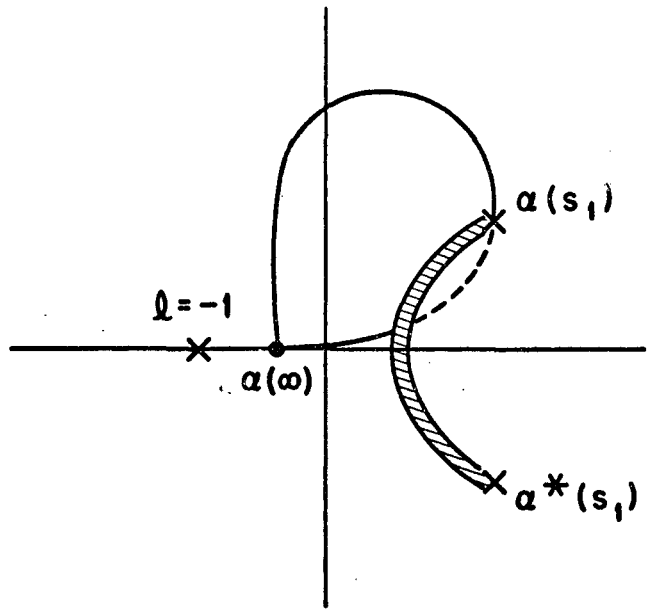

MU-32633

Fig. 12. Singularity structure of $B_\ell^{(P)}(s)$ in the angular-momentum plane.

This report was prepared as an account of Government sponsored work. Neither the United States, nor the Commission, nor any person acting on behalf of the Commission:

A. Makes any warranty or representation, expressed or implied, with respect to the accuracy, completeness, or usefulness of the information contained in this report, or that the use of any information, apparatus, method, or process disclosed in this report may not infringe privately owned rights; or

B. Assumes any liabilities with respect to the use of, or for damages resulting from the use of any information, apparatus, method, or process disclosed in this report.

As used in the above, "person acting on behalf of the Commission" includes any employee or contractor of the Commission, or employee of such contractor, to the extent that such employee or contractor of the Commission, or employee of such contractor prepares, disseminates, or provides access to, any information pursuant to his employment or contract with the Commission, or his employment with such contractor.