UCRL-11167

University of California

Ernest O. Lawrence Radiation Laboratory

TWO-WEEK LOAN COPY

This is a Library Circulating Copy which may be borrowed for two weeks. For a personal retention copy, call Tech. Info. Division, Ext. 5545

CONSISTENCY OF THE STRIP APPROXIMATION

Berkeley, California

DISCLAIMER

This document was prepared as an account of work sponsored by the United States Government. While this document is believed to contain correct information, neither the United States Government nor any agency thereof, nor the Regents of the University of California, nor any of their employees, makes any warranty, express or implied, or assumes any legal responsibility for the accuracy, completeness, or usefulness of any information, apparatus, product, or process disclosed, or represents that its use would not infringe privately owned rights. Reference herein to any specific commercial product, process, or service by its trade name, trademark, manufacturer, or otherwise, does not necessarily constitute or imply its endorsement, recommendation, or favoring by the United States Government or any agency thereof, or the Regents of the University of California. The views and opinions of authors expressed herein do not necessarily state or reflect those of the United States Government or any agency thereof or the Regents of the University of California.

To be published in Physical Review

UCRL-11167

UNIVERSITY OF CALIFORNIA

Lawrence Radiation Laboratory
Berkeley, California

AEC Contract No. W-7405-eng-48

CONSISTENCY OF THE STRIP APPROXIMATION

C. Edward Jones

December 18, 1963

Consistency of the Strip Approximation*

C. Edward Jones†

Lawrence Radiation Laboratory
University of California
Berkeley, California

December 18, 1963

ABSTRACT

An investigation is made to determine those properties demanded of the Regge pole formulas used by Chew and Jones in order to ensure the consistency of the strip approximation. A study of the asymptotic behavior of the Regge parameters based on the dynamical equations is also made in relation to the same question. The conclusion is drawn that the dynamical equations appear capable of producing solutions that are essentially self-consistent with the strip approximation that was used as an input. The Chew-Jones Regge pole formula is also compared with one suggested earlier by Khuri.

I. INTRODUCTION

In the preceding paper[1] a specific calculational scheme is given for bootstrapping the top-lying Regge trajectories by means of a set of N/D equations. To produce the bootstrap cycle, the input of the calculation is parameterized in terms of the Regge trajectories of the crossed channels[2] and the output trajectories are required to agree self-consistently with the input. The contributions associated with Regge trajectories that form the input of the calculation are expressed by formulas that are assumed to give a good approximation to the scattering amplitude in certain strip regions of the Mandelstam diagram shown in Fig. 1.

The object of the discussion here will be to establish in more detail the conditions under which the strip approximation is expected to be consistent. In Section II we shall study the crossing symmetric Regge representation used by Chew and Jones (CJ) as the basis for the strip approximation to see what properties are required for it to be an accurate representation of the amplitude. The validity of the strip approximation is closely linked with the asymptotic properties of the Regge parameters, and in Section III we discuss what the dynamical equations predict about these properties.

II. CROSSING SYMMETRIC REGGE REPRESENTATION AND THE STRIP APPROXIMATION

We examine here the crossing symmetric Regge representation, which is the basis for the strip approximation[1], to see that it conforms to all reasonable physical requirements and that it is consistent with the basic approximation scheme. The main object of the strip approximation in CJ is to determine an approximate representation for the function $B_\ell^P(s)$, thus determining the kernel of the dynamical equation.

Representing $B_\ell^P(s)$ by a few leading Regge-pole terms in the t and u channels appears to be the best parameterization of the input to the N/D equations yet discovered. These terms include the effects of resonances in the crossed channels which dominate the nearby portion of the left-hand cut. To the extent that the Mandelstam cuts can be considered weak in comparison to the poles (see Section VII of reference 1), these terms also correctly characterize the asymptotic behavior on the left- and right-hand cuts. Most previous calculations have been content with representing correctly only the nearby part of the left-hand cut, and ignoring inelastic effects (such as keeping one term of a polynomial expansion in the crossed channel, as was proposed in the original work by Chew and Mandelstam[3]). Even admitting that the Regge parameterization is desirable, there is still the question remaining of what form the Regge representation should take. We shall examine here the one proposed by CJ and compare it with one suggested earlier by Khuri.[4]

What we seek is an approximate representation of the full amplitude of the form

$$\begin{aligned} A(s,t,u) \approx & \sum_i \left[R_i^{t_1}(s,t) + \xi_i R_i^{u_1}(s,u) \right] \\ & + \sum_j \left[R_j^{s_1}(t,s) + \xi_j R_j^{u_1}(t,u) \right] \\ & + \sum_k \left[R_k^{s_1}(u,s) + \xi_k R_k^{t_1}(u,t) \right], \end{aligned} \tag{II. 1}$$

where we have a sum over the leading Regge pole terms in the s, t, and u channels respectively. (The $\xi_{i,j,k}$ are signature factors and we have used the notation in CJ.) The strip regions in which the various terms of (II. 1) are assumed to dominate the amplitude are shown in Fig. 1. These regions include the low-energy range of all three channels and the high-energy domain near the forward and backward directions. The companion diagram, Fig. 2, shows

the corresponding regions where the Mandelstam double-spectral functions are dominated by Regge pole terms. As explained in reference 1, our $B_\ell^P(s)$ input is to be determined by the t and u Regge terms from (II. 1) as well as by the left-hand cut contribution from the s Regge term.

We now list the desired properties of our Regge representation (II. 1):

1. Near the resonances in each channel the expression should go over to the usual Breit-Wigner form with the correct position and width. This means that in the angular momentum plane there should be a pole at $\ell = \alpha$ (s, t, or u) in the amplitude, with the correct residue, β (s, t, or u).

2. Each Regge term should give the correct asymptotic behavior in the strip region in which it dominates. For example, the s-channel term must have a behavior $c_i(s)\, t^{\alpha_i(s)}$ as $t \to \infty$, where the power and the coefficient are correct.

3. No spurious poles are permitted in the ℓ plane to the right of $\mathrm{Re}\, \ell = -\frac{1}{2}$. Spurious poles which approach the physical region are obviously unwanted and have the effect of distorting the left-hand cut.

4. Each Regge term should satisfy the Mandelstam representation with a double-spectral function characteristic of the strip region in which it dominates. (See Fig. 2.)

5. Each Regge term should vanish asymptotically in a direction perpendicular to its strip. Thus an s-channel Regge term gives the asymptotic behavior of the amplitude as $t \to \infty$, but is required to vanish as $s \to \infty$. This requirement is very important if we are to avoid double-counting in (II. 1) and also if we are to be certain that the part of the amplitude neglected in (II. 1) is small. This requirement means that a Regge term will contribute asymptotically in a direction perpendicular to its strip no more strongly than the background term of a Sommerfeld-Watson transform.

In order to establish a representation (II. 1) satisfying properties 1 through 5 we shall assume: (a) the partial-wave amplitude in each of the three channels is meromorphic with only Regge poles to the right of $\mathrm{Re}\,\ell = -\frac{1}{2}$; (b) the actual residues of the Regge poles, β, vanish asymptotically at least as fast as the inverse square root of energy, to within logarithmic factors;[5] (c) in order for the specific representation we discuss to satisfy requirement 3, we must assume that all Regge poles that reach the right half ℓ plane restrict their movement in the ℓ plane to the right of $\mathrm{Re}\,\ell = -\frac{1}{2}$; (d) both γ (the reduced residue) and α are real analytic functions cut from threshold to $+\infty$.

It may be possible to invent a representation (II. 1) which dispenses with assumption (c); however, it appears quite possible in the CJ model that the equation will actually generate solutions having property (c).

We now show that if we make the above assumptions, the representation given in CJ has the properties required. We look at $R_i^{t_1}(s, t)$ defined by

$$R_i^{t_1}(s,t) = \frac{1}{2}[2\alpha_i(s)+1]\,\gamma_i(s)(-q_s^2)^{\alpha_i(s)} \int_{t_1}^{\infty} \frac{dt'}{t'-t}\, P_{\alpha_i(s)}(-1-t'/2q_s^2), \qquad \text{(II. 2)}$$

where $\gamma_i(s)$ is the actual residue $\beta_i(s)$ divided by $(q_s^2)^{\alpha_i(s)}$, and $q_s^2 = s/4 - 1$. Equation (II. 2), as it stands, is well defined for $\alpha_i(s) < 0$, and is to be determined in other regions by analytic continuation. We see immediately by inspection that $R_i^{t_1}(s, t)$ satisfies property 4, having a double-spectral function with asymptotes $s = s_0$, $t = t_1$.

Using the dispersion relation for Legendre functions of complex order, we may rewrite equation (II. 2)

$$R_i^{t_1}(s,t) = \frac{1}{2}\left[2\alpha_i(s)+1\right]\gamma_i(s)(-q_s^2)^{\alpha_i(s)}\left\{\frac{-\pi}{\sin\pi\alpha_i(s)}P_{\alpha_i(s)}\left[1+(t/2q_s^2)\right]\right.$$

$$\left.+\int_{-1-(t_1/2q_s^2)}^{1} dz' \frac{P_{\alpha_i(s)}(z')}{z'+1+(t/2q_s^2)}\right\}. \qquad \text{(II. 3)}$$

The first term in (II. 3) is just the ordinary Regge pole formula, which then has a pole in the angular momentum at $\ell = \alpha_i(s)$ with the correct residue, $\beta_i(s)$. As is well known, the first term also possesses a spurious pole in the ℓ plane at $\ell = -\alpha_i(s) - 1$, but as long as we make assumption (c) it will never reach the right half ℓ plane. The integral term in (II. 3) has, for fixed s, an asymptotic t expansion consisting of integral powers of $1/t$. This means that this term can have, at worst, a sequence of fixed poles in the ℓ plane at the negative integers. Properties 1 and 3 are thus verified.

Asymptotic behavior in t for fixed s is clearly governed by the first term of (II. 3) and has the correct form required by property 2.

For the asymptotic properties perpendicular to the strip we must look at the second term of (II. 3), which for large s and fixed t diverges at the lower limit of integration. In this neighborhood, we can write

$$\int_{-1-(t_1/2q_s^2)}^{1} dz' \frac{P_{\alpha_i(s)}(z')}{z'+1+\frac{t}{2q_s^2}} \underset{\substack{s\to\infty \\ t \text{ fixed}}}{\approx} \text{const}\int_{-1-(t_1/2q_s^2)} dz' \frac{\ln(z'+1)}{z'+1+(t/2q_s^2)} \propto \ln^2 s, \qquad \text{(II. 4)}$$

and thus

$$R_i^{t_1}(s,t) \underset{\substack{s\to\infty \\ t \text{ fixed}}}{\approx} \text{const}\ \beta_i(s)\ln^2 s. \qquad \text{(II. 5)}$$

With assumption (b), this establishes property 5.

We now wish to verify that Eq. (II. 1) constitutes a good approximation to the amplitude in the sense that the remainder of the amplitude (presumably depending almost exclusively on portions of the double-spectral functions not shaded in Fig. 2) vanishes asymptotically in each direction at least as fast as the inverse square root of the energy variable. This follows from assumption (a).

To carry out the proof, we break the amplitude up into the contributions coming from each double-spectral function. We consider $A_{st}(s,t)$ arising from the (s,t) double-spectral function. The partial-wave amplitudes which result from $A_{st}(s,t)$ by projection in the s and t channels possess the same Regge poles in those channels as the full amplitude $A(s,t)$. We now perform a Sommerfeld-Watson transformation on $A_{st}(s,t)$ in the t channel; when this is accomplished we replace the ordinary Regge pole term with $R_j^{s\,1}(t,s)$, incorporating the difference into the background. Thus we write[6]

$$A_{st}(s,t) = A_{st}^{Bt}(s,t) + R_j^{s\,1}(t,s), \tag{II. 6}$$

where the first term on the right represents the t background term. Asymptotically in s, we may write

$$A_{st}^{Bt}(s,t) \underset{\substack{s\to\infty \\ t \text{ fixed}}}{\leq} \text{const} / s^{1/2} . \tag{II. 7}$$

We can now perform a Sommerfeld-Watson transformation of (II. 6) in the s channel and, recalling the asymptotic t behavior of the second term,

$$R_j^{s\,1}(t,s) \xrightarrow[\substack{t\to\infty \\ s \text{ fixed}}]{} \beta_j(t) \ln^2 t , \tag{II. 8}$$

we see that with assumption (b) this term can be identified as a part of the s channel background term. Finally, therefore, we may write

$$A_{st}(s,t) = A_{st}^{Bts}(s,t) + R_i^{t_1}(s,t) + R_j^{s_1}(t,s)\,, \tag{II. 9}$$

where the first term on the right of (II. 9) must vanish asymptotically as the inverse square root in either s or t. An identical argument may be carried out for the segments of $A(s,t)$ coming from the other two double-spectral functions, and the validity of the representation (II. 1) is established.

Khuri[4] has recently proposed an alternative Regge pole formula to Eq. (II. 2). The two formulas differ in an important way and we now wish to compare them. The link between (II. 2) and the Khuri formula is most easily established by replacing $P_{\alpha_i(s)}$ in (II. 2) by its asymptotic expansion in t'.

Assuming $\alpha_i(s) > -1/2$, we have

$$R_i^{t_1}(s,t) = \tfrac{1}{2}[2\alpha_i(s)+1]\,\gamma_i(s)(-q_s^{\,2})^{\alpha_i(s)} \times \int_{t_1}^{\infty} \frac{dt'}{t'-t} \sum_{n=0}^{\infty} c_n(s) \left(\frac{-t'}{2q_s^{\,2}}\right)^{\alpha_i(s)-n} . \tag{II.10}$$

Khuri's Regge term, $\tilde{R}_i^{t_1}(s,t)$, results from taking only a finite number of terms in (II.10) determined by the maximum excursion of $\alpha_i(s)$ for real s. Specifically, Khuri drops those terms which decrease at infinity at least as fast as the inverse square root of t' for all real values of s. The correct asymptotic t behavior is clearly preserved in this case and the pole term is correctly present, satisfying our properties 1 and 2.

The important difference between (II. 10) and (II. 2) is in the asymptotic s behavior.[4] Equation (II.10) contains the feature that the asymptotic s behavior depends as follows upon the number of terms N that are retained in the sum,[7]

$$\tilde{R}_i^{t_1}(s,t) \xrightarrow[\substack{s\to\infty \\ t \text{ fixed}}]{} \text{const}\ \beta_i(s)(q_s^{\,2})^{N-\alpha_i(s)} . \tag{II.11}$$

In order to satisfy property 5, and also the condition that the remainder of the amplitudes after the Khuri terms are removed vanishes in all directions like the background term, we must make different assumptions about the asymptotic behavior of the $\beta_i(s)$ than were made in (b). Specifically, in the Khuri case the $\beta_i(s)$ must generally vanish more strongly, the precise power required depending upon the maximum rightward excursion of the Regge pole $\alpha_i(s)$. This is the heart of the distinction between the two approaches, namely, a difference in the assumptions about the asymptotic behavior of the residues.

We find no reason to support the notion that the asymptotic behavior of the residues is linked to the number of resonances or bound states produced by a given Regge trajectory, and so we tend to favor assumption (b) made in CJ, and the use of expression (II. 2). The estimates given in the next section of the asymptotic behavior of the Regge parameters based upon the dynamical equations also appear to support assumption (b). Although a potential-theory argument on this point must be considered weak, we note that in nonrelativistic potential scattering there is no correlation between the asymptotic behavior of the residue and the rightward excursion of the Regge trajectory.

III. ASYMPTOTIC BEHAVIOR OF REGGE PARAMETERS

The dynamical equations in CJ determine the Regge trajectories $\ell = \alpha(s)$ through solution of the equation

$$D_\ell(s) = 0. \tag{III. 1}$$

This can be solved for $s < s_0$, where all quantities involved are real. Once $\alpha(s)$ is determined, the residue may be calculated. In fact the self-consistency requirement of the bootstrap calculation is satisfied by matching the Regge parameters which go into determining $B_\ell^P(s)$ with those computed using (III. 1). Of immediate interest is the question of the asymptotic behavior of trajectories

and residues. We have seen in the previous section that a consideration of this point is quite important in establishing the consistency of the strip approximation.

First, we discuss the asymptotic behavior of $\alpha(s)$, which is determined by the solutions of (III. 1) as $s \to \infty$. We know $D_\ell \to 1$ as $s \to \infty$, so it appears reasonable that if the top-lying trajectories approach distinct limits as $s \to \infty$, this limit must be a fixed infinite-type ℓ singularity of $D_\ell(s)$. To illustrate we consider the mechanism of a fixed simple pole in ℓ discussed in CJ. In this case we can write, for $D_\ell(s)$,

$$D_\ell(s) = 1 + \frac{1}{\pi[\ell - \alpha(\infty)]} \int_{s_0}^{s_1} ds' \, \frac{r(s', \ell)}{s' - s} , \tag{III. 2}$$

where $r(s, \ell)$ is regular at $\ell = \alpha(\infty)$. Solving Eq. (III. 1) in the high-energy limit gives

$$\alpha(s) - \alpha(\infty) = d/s + \text{terms of order } 1/s^2$$

$$d = \frac{1}{\pi} \int_{s_0}^{s_1} ds' \, r[s', \alpha(\infty)] . \tag{III. 3}$$

It is argued in CJ that the fixed poles that occur arise from the Fredholm character of the basic equation. The explicit expression for the Fredholm kernel $K'(s, s')$ that results from the dynamical equations is given by Eq. (I. 11) of reference 8. In this problem it is important to note that the kernel is actually a function of the eigenparameter ℓ, rather than being a simple multiplicative factor. In regions where the kernel $K'_\ell(s, s')$ is locally an analytic function of ℓ, this cannot change the nature of the eigenvalue problem, for $K'_\ell(s, s')$ can be expanded in these regions to give in a neighborhood the usual linear dependence on ℓ. This functional dependence of the kernel on the parameter ℓ,

however, modifies the solution as a function of ℓ from what would be expected in the usual Fredholm case, and it becomes an important problem to study the singularities of the kernel in ℓ. In the standard case the eigenparameter simply multiplies the kernel and the solution possesses poles in the ℓ plane given by the zeroes of the Fredholm determinant, which is a holomorphic function. These poles possess no point of accumulation in the finite plane.

In our case, the kernel $K_\ell'(s, s')$ will generally possess poles as well as branch points, and the above picture becomes considerably more complicated. Near fixed poles of the kernel in ℓ we expect an accumulation of Fredholm poles, since the kernel becomes unbounded in such a neighborhood. Branch points in the kernel may be transmitted more or less directly to the solution, or such singularities may be modified in the process, depending on the singularity type. In any event the singularity structure of the kernel $K_\ell'(s, s')$ in ℓ will clearly play an important role in determining the nature of the dynamical solutions, and (as already discussed) we also expect it to play a central role in determining the asymptotic behavior of the Regge parameters.

The Fredholm kernel $K_\ell'(s, s')$ has essentially the same singularity as $B_\ell^P(s)$ has in the ℓ plane, and we shall begin our discussion by locating important singularities of $B_\ell^P(s)$. As shown in CJ, if the residues vanish sufficiently fast at infinity the leading singularity will be the Gribov-Pomeranchuk[9] pole at $\ell = -1$. In the discussion that follows, we make the assumption that the Gribov-Pomeranchuk pole is the dominant singularity of $B^P(s)$. This assumption can be directly justified if the reduced residues, $\gamma_i(s)$, vanish strongly at infinity and high-energy elastic scattering data lend experimental support to this notion (see Section VI of CJ).[10] The unbounded character of the function near $\ell = -1$ is expected to produce an accumulation point for Fredholm poles, and if these poles are distinct we may focus our attention on the one standing farthest to the right at $\ell = \alpha(\infty)$. The pole produced in the solution of the integral equation for $N_\ell(s)$ is carried over to $D_\ell(s)$ by the relation

$$D_\ell(s) = 1 - \frac{1}{\pi} \int_{s_0}^{s_1} ds' \frac{\rho_\ell(s') N_\ell(s')}{s' - s} . \tag{III. 4}$$

If we assume a simple pole at $\ell = \alpha(\infty)$, the situation of equation (III. 2) is produced and the asymptotic behavior (III. 3) is found for $\alpha(s)$. Note that the Fredholm pole occurs in both N and D, thereby cancelling out in the complete amplitude. This is as it should be, for the complete amplitude has no fixed pole at $\ell = \alpha(\infty)$. We also point out that $B_\ell^P(s)$ is regular at $\ell = \alpha(\infty)$. To determine the corresponding asymptotic behavior for the reduced residue $\gamma(s)$ we use the fact

$$\gamma(s) = \left. \frac{N_{\alpha(s)}(s)}{dD_\ell(s)/d\ell} \right|_{\ell = \alpha(s)} . \tag{III. 5}$$

We can expand both N and D in a Laurent series about $\ell = \alpha(\infty)$,

$$D_\ell(s) = 1 + \frac{r_D(s)}{\ell - \alpha(\infty)} + \sum_{n=0}^{\infty} f_n^D(s) \, [\ell - \alpha(\infty)]^n , \tag{III. 6}$$

$$N_\ell(s) = \frac{r_N(s)}{\ell - \alpha(\infty)} + \sum_{n=0}^{\infty} f_n^N(s) \, [\ell - \alpha(\infty)]^n . \tag{III. 7}$$

For our purposes it will be convenient to write the equation for $N_\ell(s)$ as

$$N_\ell(s) = D_\ell(s) \, B_\ell^P(s) + \frac{1}{\pi} \int_{s_0}^{s_1} ds' \frac{B_\ell^P(s') \, \rho_\ell(s') N_\ell(s')}{s' - s} . \tag{III. 8}$$

Thus, inserting (III. 7) into (III. 8),

$$N_\ell(s) = D_\ell(s) \, B_\ell^P(s) + \frac{1}{\pi} \frac{1}{[\ell - \alpha(\infty)]} \int_{s_0}^{s_1} ds' \frac{B_\ell^P(s') \, \rho_\ell(s') \, r_N(s')}{s' - s}$$

$$+ \frac{1}{\pi} \sum_{n=0}^{\infty} [\ell - \alpha(\infty)]^n \int_{s_0}^{s_1} ds' \frac{B_\ell^P(s') \, \rho_\ell(s') \, f_n^N(s')}{s' - s} . \tag{III. 9}$$

The functions $B_\ell^P(s)$ and $\rho_\ell(s)$ also have expansions about the point $\ell = \alpha(\infty)$:

$$B_\ell^P(s) = \sum_{n=0}^{\infty} b_n(s)[\ell - \alpha(\infty)]^n, \tag{III. 10}$$

$$\rho_\ell(s) = \sum_{n=0}^{\infty} \rho^n(s)[\ell - \alpha(\infty)]^n.$$

Substituting $\ell = \alpha(s)$ into (III. 9), we keep the leading behavior in s as $s \to \infty$. We find the first term of (III. 9) vanishes because $D_{\alpha(s)}(s) = 0$, giving

$$N_{\alpha(s)}(s) \underset{s\to\infty}{\approx} -\frac{1}{s\pi}\,\frac{c}{\alpha(s) - \alpha(\infty)},$$

$$c = \int_{s_0}^{s_1} ds'\, b_0(s')\,\rho_0(s')\, r_N(s'). \tag{III. 11}$$

We also have

$$\left.\frac{dD_\ell(s)}{d\ell}\right|_{\ell=\alpha(s)} = -\frac{r_D(s)}{[\alpha(s)-\alpha(\infty)]^2} + \sum_{n=0}^{\infty} n\, f_n^D(s)[\alpha(s)-\alpha(\infty)]^{n-1} \underset{s\to\infty}{\approx} -\frac{r_D(s)}{[\alpha(s)-\alpha(\infty)]^2};$$

$$r_D(s) \underset{s\to\infty}{\approx} \frac{\text{const}}{s}. \tag{III. 12}$$

Recalling (III. 3), we have finally

$$\gamma(s) \underset{s\to\infty}{\approx} -\frac{c}{\pi s}\,\frac{\alpha(s) - \alpha(\infty)}{r_D(s)} = \frac{\text{const}}{s}. \tag{III. 13}$$

We see that Eq. (III. 13) implies for $\beta(s)$ an asymptotic behavior

$$\beta(s) \xrightarrow[s\to\infty]{\text{as}} s^{\alpha(\infty)-1}.$$

As long as $\alpha(\infty) < 1/2$, $\beta(s)$ will vanish strongly enough at infinity to satisfy property 5 of Section II.

One may ask if it is possible for multiple poles to develop at $\ell = \alpha(\infty)$ in our Fredholm equation. The answer to the question is apparently "yes," because the kernel $K_\ell'(s, s')$ is not symmetrical. When the kernel is not symmetrical there is no assurance it can be diagonalized, and such a failure provides the opportunity for multiple poles to occur. This possibility, we shall see, complicates the question of asymptotic behavior.

We can illustrate the occurrence of multiple poles for non-symmetrical kernels by reference to a simple example in linear algebraic equations. Consider the linear equations

$$\lambda x = y + Lx, \tag{III.14}$$

where
$$x = \begin{pmatrix} x_1 \\ x_2 \end{pmatrix}, \quad y = \begin{pmatrix} y_1 \\ y_2 \end{pmatrix}, \quad L = \begin{pmatrix} 1 & 1 \\ 0 & 1 \end{pmatrix}. \tag{III.15}$$

The operator L is readily seen to have a double eigenvalue for $\lambda = 1$, but there is only one eigenvector $\begin{pmatrix} 1 \\ 0 \end{pmatrix}$. Thus L cannot be diagonalized and the solution to (III.14) has a double pole when $\lambda = 1$. Because of the complete correspondence that exists between systems of linear algebraic and Fredholm integral equations, we may infer that the above result is quite general and we may expect to find, for nonsymmetric kernels, kth-order Fredholm poles.[11]

In the case of kth-order poles, reasoning similar to that leading to Eq. (III.3) gives

$$\alpha(s) - \alpha(\infty) = \text{const}\,(-s)^{-1/k}. \tag{III.16}$$

The corresponding asymptotic behavior for the reduced residue is

$$\gamma(s) \underset{s \to \infty}{\approx} \text{const}\,(-s)^{-1/k}. \tag{III.17}$$

In this case the high-energy behavior is

$$\beta(s) \xrightarrow[s \to \infty]{\text{as}} s^{\alpha(\infty) - 1/k} .$$

So, in order for property 5 of Section II to be true, we must have

$$\alpha(\infty) < 1/k - 1/2 .$$

It should be emphasized that in both the simple and multiple-pole cases, the asymptotic behavior deduced puts an upper bound on the behavior; the residues may vanish more rapidly.

IV. CONCLUSION

We have established the conditions under which Eqs. (II. 1) and (II. 2) are expected to comprise a good approximation to the scattering amplitude in the strip region of Fig. 1. The basic requirements for the consistency of the approximation are that $\beta(s)$ vanish at infinity as least as fast as the inverse square root[5] of s and that $\alpha(\infty) > -1/2$. An examination of the dynamical equations in the asymptotic limit suggests that solutions with the general asymptotic properties required to make the strip approximation consistent can be expected. However, from the considerations given here, one cannot establish conclusively the strong tendency for the reduced residues to vanish at infinity, as indicated by experiment. More precise information and new insights on these questions will doubtless emerge as numerical calculations with the equations are performed.

ACKNOWLEDGMENT

I am grateful to Professor Geoffrey F. Chew for the guidance and suggestions helpfully given during the course of this work.

REFERENCES AND FOOTNOTES

*Work done under the auspices of the U. S. Atomic Energy Commission.

†Present address: Princeton University, Princeton, N. J.

1. G. F. Chew and C. E. Jones, accompanying article, hereafter referred to as CJ.

2. In a complete calculation there is also a contribution to the input coming from the direct-channel Regge trajectories, as explained in reference 1.

3. G. F. Chew and S. Mandelstam, Phys. Rev. 119, 467 (1960); Nuovo Cimento 19, 752 (1961).

4. N. Khuri, Phys. Rev. Letters 10, 420 (1963) and Institute for Advanced Study preprint, 1963.

5. Requiring the residues to vanish as the inverse square root is somewhat arbitrary; the arguments given here can be made if the residues vanish with any power. Of course, from the point of view of a practical calculation, the stronger the vanishing, the better.

6. This line of argument is closely related to the one given by Khuri in reference 4.

7. The $c_n(s)$ functions that appear in Eq. (II.10) for the cases we are considering will generally approach constants at infinity.

8. G. F. Chew, Phys. Rev. 130, 1264 (1963).

9. V. N. Gribov and I. A. Pomeranchuk, Phys. Letters 2, 239 (1962).

10. Even if there were to be an important singularity slightly to the right of the Gribov-Pomeranchuk, it is conceivable that the arguments that follow might not need any major modifications.

11. The author is grateful to Roland L. Omnes for discussion on this point.

FIGURE LEGENDS

Fig. 1. Region of validity of strip approximation.

Fig. 2. Regions where Regge terms dominate the double-spectral functions.

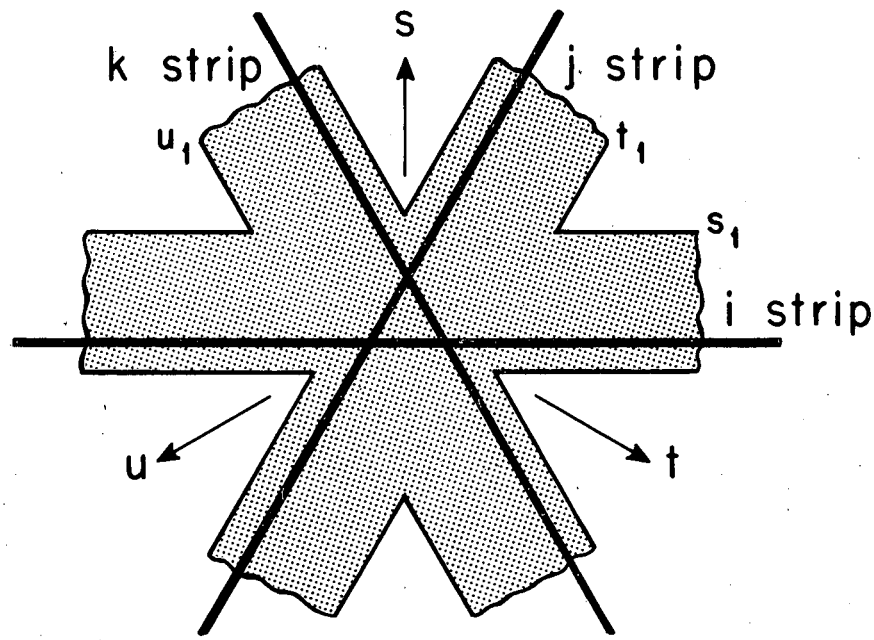

MU-32631

Fig. 1

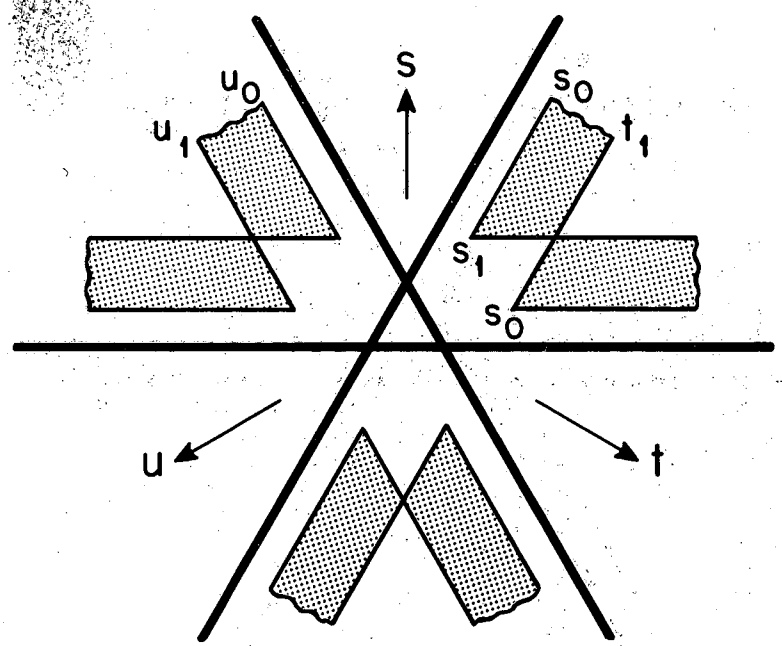

MU-32632

Fig. 2

This report was prepared as an account of Government sponsored work. Neither the United States, nor the Commission, nor any person acting on behalf of the Commission:

A. Makes any warranty or representation, expressed or implied, with respect to the accuracy, completeness, or usefulness of the information contained in this report, or that the use of any information, apparatus, method, or process disclosed in this report may not infringe privately owned rights; or

B. Assumes any liabilities with respect to the use of, or for damages resulting from the use of any information, apparatus, method, or process disclosed in this report.

As used in the above, "person acting on behalf of the Commission" includes any employee or contractor of the Commission, or employee of such contractor, to the extent that such employee or contractor of the Commission, or employee of such contractor prepares, disseminates, or provides access to, any information pursuant to his employment or contract with the Commission, or his employment with such contractor.