UCRL-11245

# University of California

# Ernest O. Lawrence Radiation Laboratory

A NEW PARTICLE IDENTIFIER TECHNIQUE FOR Z=1 AND Z=2 PARTICLES IN THE ENERGY RANGE > 10 MeV

TWO-WEEK LOAN COPY

*This is a Library Circulating Copy which may be borrowed for two weeks. For a personal retention copy, call Tech. Info. Division, Ext. 5545*

Berkeley, California

## DISCLAIMER

This document was prepared as an account of work sponsored by the United States Government. While this document is believed to contain correct information, neither the United States Government nor any agency thereof, nor the Regents of the University of California, nor any of their employees, makes any warranty, express or implied, or assumes any legal responsibility for the accuracy, completeness, or usefulness of any information, apparatus, product, or process disclosed, or represents that its use would not infringe privately owned rights. Reference herein to any specific commercial product, process, or service by its trade name, trademark, manufacturer, or otherwise, does not necessarily constitute or imply its endorsement, recommendation, or favoring by the United States Government or any agency thereof, or the Regents of the University of California. The views and opinions of authors expressed herein do not necessarily state or reflect those of the United States Government or any agency thereof or the Regents of the University of California.

For meeting and Proceedings of
9th Scintillation and Semiconductor
Symposium - Washington D. C.
Feb. 26-28, 1964

UCRL-11245

UNIVERSITY OF CALIFORNIA

Lawrence Radiation Laboratory
Berkeley, California

AEC Contract No. W-7405-eng-48

# A NEW PARTICLE IDENTIFIER TECHNIQUE FOR Z=1 AND Z=2 PARTICLES IN THE ENERGY RANGE > 10 MeV

Fred S. Goulding, Donald A. Landis, Joseph Cerny, III,
and Richard H. Pehl

February 3, 1964

# A NEW PARTICLE IDENTIFIER TECHNIQUE FOR Z=1 AND Z=2 PARTICLES IN THE ENERGY RANGE > 10 MeV

Fred S. Goulding, Donald A. Landis, Joseph Cerny, III, and Richard H. Pehl

Lawrence Radiation Laboratory
University of California
Berkeley, California

## Abstract

Protons, deuterons, tritons, helium-3, and α particles produced in nuclear reactions have previously been identified by use of ΔE and E counters to determine dE/dx and E. Multiplying these together produces an output that is dependent on the type of particle. This technique is based on the theoretical relationship between dE/dx, E, and the mass and charge of the particle. Unfortunately there is an obvious restriction on the technique, since dE/dx changes as the particle passes through the ΔE counter. For the E(dE/dx) product to have any real meaning, the ΔE counter must be thin and absorb only a small part of the total energy. This limits the use of this technique in a given experiment to small energy ranges and to selected types of particle.

The new identifier also uses a ΔE (thickness T) and E counter, but employs the empirical relationship. Range = a $E^{1.73}$, where a depends on the type of particle. Using this relationship, one can show

$$T/a = (E + \Delta E)^{1.73} - E^{1.73}.$$

The identifier employs logarithmic elements to calculate this quantity and to produce an output that has a fixed value for each type of particle. The thickness of the ΔE counter is not limited to a very small value, and the identifier can cope with mixtures of all five types of particle, each covering a fairly wide energy range. Experimental results using this identifier and lithium-drifted silicon detectors are presented, and illustrate the clear separation between $He^3$ and $He^4$ particles (difficult to achieve with the multiplier type of identifier).

## The Problem

Studies of nuclear structure commonly involve bombardment of target materials by high-energy particles produced by machines such as cyclotrons and Van de Graaff machines. As higher bombarding-particle energies are employed in these studies the reactions produced in the target become more complex and several reaction products may result. For example,[1] bombardment of a $C^{12}$ target by 24-MeV deuterons produces the reactions $C^{12}(d,\alpha)B^{10}$; $C^{12}(d,He^3)B^{11}$; $C^{12}(d,t)C^{11}$; $C^{12}(d,d)C^{12}$ (elastic scattering); $C^{12}(d,p)C^{13}$. The energy of the outgoing particle is, in each case, determined by the energy level of the final nucleus; since the final nucleus can be produced in a series of excited states (or its ground state) the spectrum of the outgoing particles, corresponding to only one of the above reactions, consists of a series of peaks covering a wide energy range. The measurement of spectra of emitted reaction particles is one of the principal tools in studies of nuclear energy levels. Unfortunately, unless a detection system can be devised which not only measures particle energy but also identifies the particle as a proton, deuteron, etc., interpretation of the complex spectra can sometimes be quite difficult. Particle-identification techniques such as described in this paper are therefore essential to many particle-reaction studies.

## Basic Existing Identifier Techniques

Electromagnetic deflection systems may be used to select particles of a given type, but these are expensive and inefficient. Particle-identifying systems commonly used in nuclear reaction experiments are based on the fact that different kinds of particles of the same energy lose energy in absorbers at different rates. Thus, the rate of energy loss for an α particle of a given energy is about 12 times that of a proton of the same energy. A thin transmission particle detector placed in front of a thick detector allows simultaneous determination of the rate of energy loss (signal in the thin ΔE detector) and the total energy (signals in ΔE and thick E detectors added together) for a particle passing into the counter system. If a suitable calculation using the two signals is carried out we can, in principle, say what type of particle is registered. Early systems based on this concept employed scintillation detectors, but the improved energy resolution obtainable from silicon junction detectors has resulted in their use in the energy range where total absorption of the particle energy in a silicon detector (up to 0.5 cm thick) is possible. The following discussion refers particularly to silicon detectors, but the general considerations apply equally well to scintillation detectors.

To achieve its maximum usefulness a particle identifier must produce an output signal whose amplitude determines the type of particle with no ambiguity, even though several types of particle--each covering a wide range of energies--may pass through the counter system. Thus, a 10-MeV proton should ideally produce the same identifier output signal as a 100-MeV proton, while 10- and 100-MeV α particles should produce the same output signal as each other but quite different from that produced by protons.

This case is a simple one, as α particles and protons differ greatly in their rate of loss of energy. However, the problem becomes quite difficult if one wishes to separate $He^3$ and α particles, for which the rate of loss of energy differs by only 25%.

In earlier particle identifiers the attempt was made to satisfy the requirements by using a modification of Bethe's calculation for the rate of energy loss.

Thus, $$\frac{dE}{dx} = \frac{4\pi q^4 Z^2}{mV^2} \times Nz \left[\log_e \frac{2\,mV^2}{I} - \log_e(1-\beta^2) - \beta^2\right], \qquad (1)$$

where $\frac{dE}{dx}$ = rate of energy loss of the particle,

$q, m$ = charge and mass of electron,

$Z, V$ = atomic number and velocity of particle,

$z$ = atomic number of the absorber,

$N$ = number of atoms per cc of absorber,

$\beta = \frac{\text{particle velocity}}{\text{velocity of light}}$,

$I$ = average energy to ionize atoms of the absorber.

If $\beta \ll 1$, Eq. (1) simplifies to

$$\frac{dE}{dx} = K_1 \frac{MZ^2}{E} \log_e K_2 \frac{E}{M}, \qquad (2)$$

where $K_1$ and $K_2$ are constants,

$E, M, Z$ = energy, mass, and atomic number of the particle.

As the logarithmic term is not a sensitive function of energy, Eq. (2) is usually further approximated to give

$$(dE/dx) \cdot E = K_3 MZ^2. \qquad (3)$$

Equation (3) forms the basis for many particle identifiers, since signals obtained from a thin ΔE counter and from a thick E counter can be multiplied together to give the left-hand side of Eq. (3), which in turn determines the value of $MZ^2$ and therefore identifies the particle.

Re-examination of Eq. (3) reveals three problems that may arise in these identifier systems.

(a) The variation in the logarithmic term of Eq. (2) is neglected. Figure 1 shows the effect of this approximation. The absolute value of these curves can be changed by changing circuit constants; we have chosen to normalize the two curves to the same value at the top of the energy range. Note that calculation based on Eq. (3) indicates that $(dE/dx)E$ remains constant with variations in E. However, in practice the real behavior is that predicted by Eq. (2). Thus, the output of the simple multiplier decreases at low energies. To partially correct for this, it has become common to calculate $(dE/dx)(E + E_0)$, where $E_0$ is an adjustable constant. Since dE becomes small at high energies, the value of $(dE/dx)E_0$ behaves as shown in Fig. 1, and addition of this curve to that for Eq. (2) yields a reasonable fit to the curve for Eq. (3). In other words, the product $(dE/dx)(E + E_0)$ has an almost constant value (depending only on $MZ^2$) over a wide energy range--the desirable condition for a particle identifier.

(b) We have assumed that the ΔE counter absorbs only a very small fraction of the total particle energy. This is not a valid assumption over a wide range of particle energies and for a number of particle types. For example, a ΔE detector that absorbs only 6 MeV from a 40-MeV α particle might absorb 14 MeV from a 15-MeV α particle. In the latter case it is obviously impossible to regard the ΔE detector as determining the rate of loss of energy, for this rate is changing radically as the particle crosses the ΔE detector thickness. To partially correct for this factor it is common to regard the particle, for identifying purposes, as having a total energy of $(E + k\Delta E)$, where k is an adjustable constant whose value lies between ~~zero~~ and 0.5, E is the signal from the thick E counter, and ΔE is the signal from the thin ΔE counter. If the loss in energy in the ΔE counter is small compared with that in the E counter, the correct value for k is 0.5. The presently available particle identifiers, using the corrections from (a) and (b), calculate the quantity $\Delta E(E + k\Delta E + E_0)$, and the constants k and $E_0$ are adjusted experimentally to obtain the best results in a given experiment. At the best this is a poor compromise, and the usefulness of such identifiers is limited. In addition, the circuit doing the multiplication has generally used expensive and specially made square-law tubes.

(c) The total energy of the particle entering the detector system is required for energy spectrum analysis. Clearly if the energy loss in the ΔE counter is a substantial fraction of the total energy, the value of the total energy must be obtained by adding the ΔE and E signals. An incidental advantage of this is that variations in thickness of the ΔE counter across its area contribute no loss in resolution in the energy-determining system.

The design of the new identifier, to be described here, started as an attempt to use logarithmic semiconductor devices for performing the multiplication process required in the earlier types of identifier. Although this was successfully achieved, it became apparent that the use of logarithmic elements allowed us to develop an identifier technique that did not suffer from the limitations mentioned in the previous paragraphs, at least in the energy range of the 88-inch Berkeley cyclotron (α's from 10 to 120 MeV,

β's from 6 to 60 MeV). The philosophy and design of this identifier are as follows.

## The New Identifier Technique

It has long been recognized that the range-energy relationship for particles in the range 10 to 100 MeV can be represented quite closely by a power law. Nomograms, sometimes used for range-energy calculations, rely upon this fact. Thus we have

$$R = a E^b, \qquad (4)$$

where R = particle range in the absorber,
a = constant depending on the type of particle,
b = constant (about 1.73),
E = incident particle energy.

Figure 2 illustrates the fit between the power law and data calculated accurately from Eq. (1).[2] The only significant departures from the power law occur for low-energy α particles and $He^3$, but even here the agreement is within ± 2%. In Fig. 3, the use of this range-energy relationship in a particle identifier is illustrated. The particle first passes through a ΔE detector and produces a signal ΔE, then enters and stops in an E detector and produces a signal E. The calculation given in Fig. 3 shows that a quantity T/a can be calculated by generating the function $(E + \Delta E)^{1.73} - E^{1.73}$. The quantity T/a is characteristic of the type of particle, and its calculated value establishes the identity of the particle producing the signals in E and ΔE detectors. The method of calculation is also illustrated in Fig. 3. The most important circuit element is a function generator whose output is equal to the input raised to the power 1.73. The signal from the E detector feeds the input to the function generator for about 1.5 μsec then the ΔE signal is added to the input for a further period of 1.5 μsec. The height of the step that occurs in the output of the function generator during the second half of this sequence is therefore a measure of $(E + \Delta E)^{1.73} - E^{1.73}$ which, in turn, determines T/a. The method of using a single function generator and time-sharing it between E and ΔE signals was chosen in preference to using two function generators to avoid difficulties that might arise because of relative drift between two function generators.

The advantage of this technique over the earlier method lies primarily in the fact that no approximations are involved except those implicit in the empirical power law. Therefore, no experimental adjustments are required in order to use the identifier, and a wide range of energies and several particle types can be simultaneously handled by the identifier.

## Description of Instrument

### General Operation

The purpose of the identifier is to accept signals (amplified) from ΔE and E detectors and, using these signals, to generate two outputs:

(i) A signal E + ΔE which represents the total particle energy.

(ii) A signal whose amplitude can be used to indicate which type of particle is detected.

In the actual instrument a single-channel analyzer permits selection of a specific type of particle, and a linear gate, operated by the output of the single-channel analyzer, lets through only E + ΔE signals produced by that type of particle. For the sake of simplicity, these are omitted in the block diagram (Fig. 4) of the system. The coincidence circuits, amplifiers and gates shown in Fig. 4 are part of linear amplifier and gating units 11X1981P-2.[3] The remainder of the system is contained in the identifier unit itself. The purpose of the coincidence gating preceding the identifier unit is to prevent signals that do not satisfy certain coincidence and amplitude requirements from entering the identifier; the pulse rates to be handled by the identifier circuits are thereby reduced.

E and ΔE signals 3 μsec wide (shaped in the amplifiers), which are in coincidence and meet the amplitude conditions imposed in the amplifiers, are mixed in the manner shown in Fig. 4 by the gated mixer circuit. The E signal passes through this mixer unchanged except that after 1.5 μsec the ΔE signal is added to it for the remaining 1.5 μsec. The timing generator, which receives its start signal from the coincidence circuit in the amplifiers, generates the 1.5-μsec delay required in the gated mixer, and also produces synchronizing signals to the remaining circuits. The stepped waveform at the output of the gated mixer feeds the input of the function generator, where the whole waveform is raised to the power of 1.73. As described in the preceding section, the amplitude of the step in the output of the function generator provides a signal suitable for recognizing the identity of the particle. A sampler circuit picks out only the step occurring between 1.5 μsec and 2.5 μsec after the start of the waveform at the output of the function generator. The resulting pulse is amplified to a suitable level to become the identifier output.

The output signal from the gated mixer is used as the E + ΔE (total-energy) signal for the purpose of energy analysis. For this signal to be correct under all conditions, it is essential that the gains of the two amplifying chains to this output point be precisely equal. We have found that this can be achieved quite satisfactorily by feeding a dummy signal consisting of a step function of voltage through a small calibrated capacitor to the two preamplifier inputs in turn (using the same capacitor and voltage). This is done with detector voltages applied so that the effects of detector capacity are included in the calibration adjustments. The amplifier gain controls are then adjusted while the E + ΔE signal is observed on an expanded vertical scale on an oscilloscope. We are able to adjust the gains of the amplifiers to within 0.1% of each other by this method, and the stability of the system is such that observed

drifts in 48-hour experiments are also within about ± 0.1%. As we make the adjustments while observing the output of the gated mixer, the method accurately compensates for differences in gain in the two signal paths through the gated mixer itself. In practice, the $\Delta E$ signal at the detector nearly always has a maximum value less than one-half the maximum E signal. For this reason, it usually proves convenient to operate the $\Delta E$ amplifier with gain twice that of the E amplifier (thereby utilizing the dynamic range of each amplifier to its limits) and to include a gain of 1/2 in the $\Delta E$ path in the gated mixer.

A brief description of specific circuits of special interest follows. (Complete details of the instrument are given in drawings listed on LRL print list 11X2650 P-1.)

## Gated Mixer

The gated mixer circuit shown in block diagram form in Fig. 5 contains two basic circuits which are used throughout this system and are described in Ref. 3. The linear gate is a series-shunt transistor gate, which generates a pedestal less than 5 mV high and which allows the $\Delta E$ signal to pass through practically unchanged or not to pass depending upon the presence or absence of a "gate-open" signal from the timing generator. The "gate-open" signal is present only during the second half of input signals. The adder circuit is a fedback transistor pair (grounded emitter followed by a grounded collector stage). As this inverts the signal, and we wish to work with positive signals at the outputs of all units, a further similar stage with a gain of -1 follows the adder circuit. The virtual ground at the base of the first transistor in the adder provides the mixing point for the signals, and choice of the feed resistors to this point allows simple choice of the relative gains in $\Delta E$ and E paths.

## Function Generator

The function generator gives an output proportional to the input raised to a power b ($b \approx 1.73$). To accomplish this operation the logarithm of the input is generated; this is then multiplied by a factor b, and finally, the antilogarithm of the resulting waveform is obtained. In order to achieve the desired accuracy in the end result of the calculation it is essential that the logarithmic and antilogarithmic elements obey the correct laws accurately over the full range of inputs and outputs (input range ≈ 10:1, output range ≈ 20:1). It is also essential that the dc shifts introduced at high counting rates (up to ≈ 10 kc/s) be negligible. The unit described here has been tested up to 50 kc/s, which is more than adequate for scattering experiments. In addition to these requirements, it is also essential that the function generator retain its calibration for long periods of time despite temperature variations up to ± 10 °C. This unit actually remains quite accurate from 0 °C to 50 °C, and no changes in calibration have been noted in periods of several weeks.

The circuit that generates the logarithm and antilogarithm relies on the logarithmic nature of the relationship between the base-emitter voltage of a transistor and its collector current. (A complete analysis of the behavior of the logarithmic and antilogarithmic circuits is given in Appendix A.) The logarithmic circuit (together with the signal multiplier that multiplies the logarithm by b) is shown in Fig. 6. In this figure, Q-2 and Q-3 constitute a White emitter-follower which feeds the input signal through resistor $R_1$ to the base of Q-4. Q-4 and Q-5 form a fedback transistor pair, the feedback being via the transistor Q-6, which acts as the logarithmic element. Since the base of Q-4 is a virtual ground the input signal $V_1$ drives a current $V_1/R_1$ through $R_1$. This current is forced into the collector of Q-6, and the base-emitter voltage of Q-6 changes by an amount approximately proportional to the logarithm of $V_1/R_1$. The waveform at the emitter of Q-6 then feeds the fedback transistor pair Q-7, Q-8, and produces an output signal equal to $R_3/R_2$ times the waveform at the emitter of Q-6. As the value of $R_3$ can be adjusted, the gain from the emitter of Q-6 to the output can be changed. In practice, the gain is adjusted to 1.73.

Two deviations from the required logarithmic law may arise in this circuit. These are caused by the standing current in the collector circuit of the logarithmic element Q-6 and by its series emitter resistance. The effects of these factors if not compensated are shown in Fig. 7. To compensate for the effect of standing current, the timing generator is used to switch a reference current in diode $CR_2$ at the same time as the input signal appears. To compensate for the series emitter resistance of Q-6 a small part of the signal is used to produce a current $\phi V_1$, which mixes at the base of Q-7 with the signal from the emitter of Q-6 (via $R_2$). Appendix A analyzes the compensation technique.

The output signal from the logarithmic circuit (multiplied by the factor b) drives the base of Q-12 (see Fig. 8), and its collector current--which is approximately an exponential function of the base drive voltage--represents the antilogarithm of this signal. The voltage developed by the collector current in $R_4$ is fed via emitter followers Q-13, Q-14, and resistor $R_5$ to the fedback amplifier that constitutes the output amplifier. As with the logarithmic circuit, departures from the desired law arise because of standing current and series emitter resistance in Q-12. The standing-current effect is compensated by a reference current $i_{ref(2)}$ generated by the timing generator at the same time as the signal and mixed with the current in $R_5$. The series resistance is compensated by applying controlled positive feedback via Q-13, Q-14, and Q-15 from the collector of Q-12 to the emitter of Q-12.

As noted in the Appendix, the temperature dependence of the antilogarithmic circuit exactly

compensates that of the logarithmic circuit, so that temperature does not appear as a variable in the final equation. However, the circuit as described so far does not eliminate the effects of dc shifts at even moderate counting rates. This is the purpose of transistors Q-1, Q-2, and Q-3 in Fig. 6 and Q-9, Q-10, and Q-11 in Fig. 8. The two circuits are quite similar, we describe the action of only the first one in detail. To simplify the discussion, transistors Q-1, Q-2, and Q-3 are assumed to have infinite $\beta$, so that collector and emitter currents are equal and base currents are zero. With these assumptions it can be seen that in the rest condition the standing current in $R_1$ (i.e., the standing current in the logarithmic element Q-6) is 130 $\mu$A. The purpose of Q-1, Q-2, and Q-3 is to reestablish the current in $R_1$ at 130 $\mu$A between input pulses at all times, so that all input pulses drive the logarithmic element from the same starting point.

With no input pulses fed to the circuit, negative feedback from the emitter of Q-3 through emitter-follower Q-1 to the base of Q-2 establishes the emitter of Q-2 at the correct voltage to drive 130 $\mu$A in $R_1$. Under these circumstances, the emitter of Q-13 sits at a positive voltage of about 12.5 V and diode $CR_1$ is nonconducting. When a positive pulse is applied via $C_1$ to the base of Q-2, the White emitter-follower containing Q-2 and Q-3 applies the signal with a gain of 1 to $R_1$. Most of the current flowing into $R_1$ during the signal flows through Q-3 and its emitter voltage drops until $CR_1$ conducts. Note that $CR_1$ conducts even for quite small signals, an input signal of 100 mV being adequate. At the end of the input pulse, the charge that flowed in $C_1$ during the pulse must be restored if no shift is to result in the next incoming pulse. Since, following the pulse, the base of Q-2 is restored to a voltage slightly lower than its value prior to the pulse, the currents in Q-2 and Q-3 are smaller than their normal values. Thus, the emitter voltage of Q-3 is raised and this positive movement, applied to the base of Q-1, drives current through the 51.1 K to recharge $C_1$ rapidly and restore its charge to its starting value. At a high input-pulse rate, the effect of this action is to produce a dc shift in the voltage (between pulses) at the emitter of Q-3 and collector of Q-2, but no significant shift occurs at the emitter of Q-2. For this arrangement to work satisfactorily it is essential that the signal pulses should not be followed by any significant overswing.

The circuit of Q-9, Q-10, and Q-11 differs from that of Q-1, Q-2, and Q-3 in including Q-12 the logarithmic element within the feedback loop. However, the action of the circuit in correcting dc shifts is similar.

An important consideration in the design of the function generator was the need to achieve adequately short rise times in the circuits. It was this factor which dictated the use of currents in the range 0.1 to 10 mA in the logarithmic elements. It has proved quite practicable in this instrument to perform the required calculations over the range of interest here to about 1% accuracy in times of about 1 $\mu$sec. [However, with very-low-level signals (E signal < 0.5 V) difficulties arise owing to the response time of the circuits. The primary source of the problem appears to be the speed of voltage change at the collectors of Q-2 and Q-10. Fortunately, the effect of this is negligible in this application of the circuits.] Performance curves for the function generator are shown in Fig. 9, and for comparison purposes a $V^{1.73}$ slope is also plotted. The curve shows the effect of the slow response for small signal inputs and illustrates the excellent performance for input signals greater than 0.75 volt.

## Sampler Circuit

This circuit is used to produce an output pulse equal in amplitude to the step that occurs during the second half of the waveform generated by the function generator. Figure 10 shows the circuit used. During the first half of the pulse from the function generator clamp, transistors Q-2 and Q-3 are both saturated because Q-4 is cut off and the current in $R_2$ flows into the bases of Q-2 and Q-3. In this condition Q-2 and Q-3 represent very low impedances from collector to emitter. The first part of the input signal therefore cuts off Q-1 for a short time while current in $R_1$ charges $C_1$; the charging current flows through Q-2 to ground. Virtually no signal appears across Q-3 or at the output of the unit. During the second part of the input signal a gate pulse obtained from the timing generator causes Q-4 to conduct, and thereby Q-2 and Q-3 become nonconducting. Any change in the input signal now feeds via emitter-follower Q-1 and capacitor $C_1$ to the output circuit.

In the complete instrument an adjustable gain is included in the output circuit of the sampler. This feature is provided so that the output pulse amplitude can be made convenient for the particle type of most interest. If the pulse output corresponding to $\alpha$ particles is adjusted to 8 V (the normal maximum linear signal in this and other compatible systems at the Lawrence Radiation Laboratory), the pulse height corresponding to protons is about 0.7 V.

## Experimental Results

This unit has been used in a number of experiments over the past 6 months, and a dual unit will shortly be used in a series of scattering experiments in which correlations between particles ejected simultaneously from a target in two directions are to be studied. The unit can be set up prior to experimental runs in about 30 minutes; electrical dummy signals are used, as mentioned earlier in this paper. We have found it convenient to check the instrument by generating dummy signals corresponding to $\Delta E$ and E signals that would be obtained in a typical experiment. Table I gives a series of typical values and illustrates the wide range of signals handled by the unit.

The identifier outputs given in this table are actual measured values, and they show that the identifier produces unambiguous signal outputs for each type of particle.

Typical results obtained under experimental conditions are shown in Figs. 11, 12, 13, and 14. These illustrate the value of the identifier in experiments with slightly different emphasis. Fig. 11 shows complete spectrum of identifier output signals obtained when bombarding oxygen with 40-MeV protons. In this case, pα, $pHe^3$, pt, pd, and pp reactions occur, and, according to the previous discussion of the identifier, one might expect to see lines in the identifier output spectrum corresponding to each type of particle. In practice the lines are spread out, owing to a number of causes, such as signal spread in the detectors, plus electronic noise and Landau effect in the ΔE counter (only 6 mils thick). Despite these effects we see virtually complete separation between alphas and $He^3$, and very good spectra for tritons, deuterons, and protons. For the tritons, deuterons, and protons the energy loss in the ΔE counter, at least for the higher-energy groups, is very small, and a thicker ΔE counter would be used to optimize identifier peak separation for these particles. Figure 12 shows the α and $He^3$ spectra obtained when Fig. 11 was obtained. Note that the energy range of α and $He^3$ particles was from about 14 MeV to 35 MeV, the lower limit being determined by the particles' being completely stopped in the ΔE counter. A very small amount of breakthrough of α's in the $He^3$ spectrum is evident in Fig. 12 [where A corresponds to the ground state, B to the first excited state in the $O^{16}(p,\alpha)N^{13}$ reaction], but the effect is practically negligible despite the large yield of the $O^{16}(p,\alpha)N^{13}$ reaction in comparison with the $O^{16}(p,He^3)N^{14}$ reaction. Also note that the general alpha groups between channels 500 and 700, due to breakup of the compound $F^{17}$ nucleus, do not obscure the fine structure in the $He^3$ spectrum in this energy region.

The second set of results, shown in Figs. 13 and 14, was obtained in an experiment in which a thicker ΔE counter (20 mils) was used to optimize the performance for p, d, and t separation. The clear separation and excellent spectra are evident in these curves. Note that the high-energy protons are not stopped by the E counter in either of these experiments. Fortunately, as with the older type of multiplier, this results in a reduced identifier output, but, as protons normally contribute the smallest identifier output, no confusion exists because of their not stopping in the E counter.

## Acknowledgments

This work was performed under contract with the U. S. Atomic Energy Commission and as part of the program of the Nuclear Chemistry Division of the Lawrence Radiation Laboratory. The encouragement of all members of the cyclotron group, and particularly Bernard G. Harvey, is gratefully acknowledged. The construction of the unit and much of the testing was carried out by Stuart Wright, and many improvements in the original design resulted from his work.

## Appendix: Analysis of Behavior of the Function Generator

We refer to Figs. 6 and 8; component designations correspond with these figures.

Let $V_1$ = signal input amplitude (pulse),

$i_{01}$ = standing current in $R_1$ (assumed to flow in the collector circuit of Q-6, as the base current of Q-4 is minute),

$i_0$ = diode saturation current for emitter base diode of Q-6,

$i_{ref(1)}$ = current switched into $CR_2$ at the same time as a signal is present,

$\phi V_1$ = current driven into the base circuit of Q-7 by the signal,

$R_{S1}$ = effective series emitter resistance (excess over junction resistance) in Q-6. This includes $r_b/\beta$, which can be regarded as appearing in series with the emitter, and the bulk resistance of the emitter region,

k = Boltzman's constant,

T = temperature, °A

q = electronic charge.

Now

The voltage from emitter to base of Q-6 in the standing condition is

$$v_{be1} = -\left[\frac{kT}{q}\log_e\left\{\frac{i_{01}+i_0}{i_0}\right\} + i_{01}R_{S1}\right].$$

Because $i_0 \approx 10^{-11}$ A, and $i_{01} \approx 10^{-5}$ A, this can be simplified to

$$v_{be1} = -\left[\frac{kT}{q}\log_e\left\{\frac{i_{01}}{i_0}\right\} + i_{01}R_{S1}\right].$$

The signal input increases the collector current in Q-6 by an amount = $V_1/R_1$.

At the same time, the current in Q-6 is reduced by $i_{ref(1)}$.

∴ New voltage across base-emitter of Q-6

$$= V_{be1} = -\left[\frac{kT}{q}\log_e\left\{\frac{i_{01}+\frac{V_1}{R_1}-i_{ref(1)}}{i_0}\right\} + \left(i_{01}+\frac{V_1}{R_1}\right)R_{S1}\right],$$

∴ Change in voltage = $V_{be1} - v_{be1}$

$$= -\left[\frac{kT}{q}\log_e\left\{\frac{\frac{V_1}{R_1} + i_{01} - i_{ref(1)}}{i_{01}}\right\} + \left(i_{01} + \frac{V_1}{R_1}\right)\cdot R_{S1}\right].$$

In practice, the last term in the result is of significance only when $V_1/R_1$ is in the range of several milliamperes. In this range $V_1/R_1 >> i_{01}$.

∴ Output signal at emitter of Q-6

$$= -\left[\frac{kT}{q}\log_e\left\{\frac{V_1}{R_1 i_{01}} + \frac{i_{01} - i_{ref(1)}}{i_{01}}\right\} + \frac{V_1 R_{S1}}{R_1}\right].$$

Examining this equation, we see that the desired relationship, which is proportional to $\log_e (V_1/R_1 i_{01})$, is confused by two items, one due to the effect of the standing current $i_{01}$ in the transistor and the other due to the effective series emitter resistance. Figure 7 shows the effect of these terms (assuming $i_{ref(1)}$ to be zero). By making $i_{ref(1)} \simeq i_{01}$ the effect of the standing current can be made negligible. In this case, output at emitter of Q-6

$$= -\left[\frac{kT}{q}\log_e\left\{\frac{V_1}{R_1 i_{01}}\right\} + \frac{V_1 R_{S1}}{R_1}\right].$$

The current removed from the base of Q-7 is then given by

$$i_1 = -\frac{kT}{q}\cdot\frac{1}{R_2}\log_e\frac{V_1}{R_1 i_{01}} - \frac{V_1 R_{S1}}{R_1 R_2} + \phi V_1$$

$$= -\frac{kT}{qR_2}\log_e\frac{V_1}{R_1 i_{01}} + V_1\left(\phi - \frac{R_{S1}}{R_1 R_2}\right).$$

If we chose $\phi = \frac{R_{S1}}{R_1 R_2}$ this equation becomes

$$i_1 = -\frac{kT}{qR_2}\log_e\left(\frac{V_1}{R_1 i_{01}}\right).$$

The final output signal from the emitter of Q-8 is then given by

$$V_{out} = \frac{kT}{q}\cdot\frac{R_3}{R_2}\log_e\left(\frac{V_1}{R_1 i_{01}}\right).$$

If $R_3/R_2 = b$,

$$V_{out} = \frac{kT}{q}\log_e\left(\frac{V_1}{R_1 i_{01}}\right)^b. \qquad \text{(A1)}$$

This signal now becomes the input signal to the antilogarithmic circuit and appears at the base of Q-12.

Set $i_{02}$ = standing current in Q-9,

$i_0$ = diode saturation current in base-emitter diode of Q-12.

Initially we will neglect the effect of emitter series resistance in Q-12 and also the effect of $R_7$.

If $V_{be2}$ = standing base-emitter voltage of Q-12, then

$$i_{02} = i_0\,[\exp(qV_{be2}/kT) - 1].$$

When the signal given by Eq. (A1) appears at the base of Q-12, it increases the collector current to

$$I = i_0\left[\exp\left\{q/kT\left[V_{be2} + kT/q\log_e\left(\frac{V_1}{R_1 i_{01}}\right)^b\right]\right\} - 1\right]$$

$$= i_0\exp(qV_{be2}/kT)\cdot\left(\frac{V_1}{R_1 i_{01}}\right)^b - i_0$$

$$= i_{02}\cdot\left(\frac{V_1}{R_1 i_{01}}\right)^b.$$

∴ Change in current = $i_{02}\left(\frac{V_1}{R_1 i_{01}}\right)^b - i_{02}$;

$$\text{signal across } R_4 = -R_4 i_{02}\left(\frac{V_1}{R_1 i_{01}}\right)^b + i_{02}R_4.$$

This signal appears across $R_5$ and the current it produces in $R_5$ is mixed with $i_{ref(2)}$ at the input of the fedback amplifier.

$$\text{Final output signal} = \frac{R_4}{R_5}\cdot R_6 i_{02}\left(\frac{V_1}{R_1 i_{01}}\right)^b - i_{02}\frac{R_4}{R_5}\cdot R_6 + i_{ref(2)}\cdot R_6.$$

If $i_{ref(2)} = i_{02}\cdot R_4/R_5$,

$$\text{Output Signal} = \frac{R_4}{R_5}\cdot\frac{R_6 i_{02}}{(R_1 i_{01})^b}\cdot V_1^{\,b}. \qquad \text{(A2)}$$

This equation, which represents the desired relationship, indicates that the temperature dependence evident in the individual logarithmic elements disappears in the final equation.

The overall response of the function generator is therefore represented by

$$V_{OUT} = \theta V_1^{\,b},$$

where

$$\theta = \frac{R_4}{R_5} \frac{R_6 i_{02}}{(R_1 i_{01})^b} \qquad \text{(A3)}$$

and

$$b = \frac{R_3}{R_2} . \qquad \text{(A4)}$$

We must now examine the role of Q-13, Q-14, Q-15, and $R_7$ in compensating for series resistance in the emitter of Q-12. The value of this resistance in the type of transistor used is between 0.5 and 1 ohm. Let this value be $R_{S2}$. The change in the collector current of Q-12 is given by

$$I - i_{02} \approx X/R_4,$$

where X = voltage swing at the collector of Q-12.

The change in emitter current of Q-12 has approximately the same value. Because of this change in emitter current a voltage drop given by $(X/R_4) \cdot R_{S2}$ will be produced in the emitter series resistance of Q-12. Transistors Q-13, Q-14, and Q-15 are arranged to draw a current proportional to $X/R_4$ out of the emitter of Q-12.

Let the collector current of Q-15 = $\frac{y \cdot X}{R_4}$ .

$$\therefore \text{ Voltage produced in } R_7 = \frac{X}{R_4} \cdot R_{S2} - \frac{yX}{R_4}$$

$$= \frac{X}{R_4} (R_{S2} - y).$$

If $y = 2 R_{S2}$,

voltage swing at top of $R_7 = - \frac{R_{S2} \cdot X}{R_4}$ .

This exactly compensates the voltage drop produced in the series emitter resistance, and the effect of the emitter series resistance (plus $r_b/\beta$) is removed.

## References


1. R. H. Pehl, Studies in Nuclear Spectroscopy by Two-Nuclear Transfer Reactions, UCRL-10993, Aug. 1963.

2. C. Williamson and J. P. Boujot, Table of Range and Rate of Energy Loss of Charged Particles of Energy 0.5 to 150 MeV, CEN, Saclay, 1962 (unpublished).

3. Lawrence Radiation Laboratory Design: drawings available from LRL Information Division, Berkeley. Information also available in Proceedings of Conference on Instrument Techniques in Nuclear Pulse Analysis, Monterey 1963, to be published by the National Academy of Sciences.


Table I. Typical signal range.

| Particle | E Total (MeV) | ΔE Signal (MeV) | E Signal (MeV) | Typical output (mV) |
|---|---|---|---|---|
| Proton | 30 | 0.46 | 29.5 | 50 |
| | 20 | 0.60 | 19.4 | 48 |
| | 10 | 1.10 | 8.9 | 50 |
| Deuteron | 30 | 0.75 | 29.3 | 80 |
| | 20 | 1.05 | 19.0 | 85 |
| | 10 | 1.75 | 8.3 | 75 |
| Triton | 30 | 1.05 | 29.0 | 120 |
| | 20 | 1.40 | 18.6 | 120 |
| | 10 | 2.40 | 7.6 | 105 |
| $He^3$ | 30 | 4.20 | 25.8 | 540 |
| | 20 | 6.20 | 13.8 | 520 |
| | 16 | 8.10 | 7.9 | 530 |
| Alpha | 30 | 5.70 | 24.3 | 740 |
| | 20 | 8.20 | 11.8 | 680 |
| | 16 | 10.7 | 5.3 | 640 |

ΔE Detector thickness assumed 5 mils (30 mg/cm$^2$)

## Figure captions

Fig. 1 -- Effect of approximation in Eq. (3).

Fig. 2 -- Range-energy relationship.

Fig. 3 -- Principles of new identifier technique.

Fig. 4 -- System block diagram (simplified).

Fig. 5 -- Gated mixer schematic.

Fig. 6 -- Logarithmic circuit (simplified).

Fig. 7 -- Logarithmic circuit nonlinearities.
Uncompensated circuit:

$$V_{out} = \frac{kT}{q} \log_e \left(\frac{V_1}{i_0 R_1} + 1\right) + \frac{V_1}{R_1} R_S,$$

where $R_S$ = series emitter resistance.

Ideal curve:

$$V_{out} = \frac{kT}{q} \log_e \left(\frac{V_1}{i_0 R}\right).$$

Fig. 8 -- Antilogarithmic circuit.

Fig. 9 -- Function generator response.

Fig. 10 -- Sampler (strobed-clamp) circuit.

Fig. 11 -- Identifier spectrum: 6-mil $\Delta E$ counter; $O^{16}$ + 40 MeV protons, lab angle 28 deg.

Fig. 12 -- Typical $\alpha$ - $He^3$ spectra: $O^{16}$ + 43.7-MeV protons, lab angle 24 deg; energy scale = 35 keV per channel.

Fig. 13 -- Identifier spectrum: 20-mil $\Delta E$ counter, 80-mil E counter; $O^{16}$ + 40-MeV protons; lab angle 30 deg.

Fig. 14 -- Deuteron spectrum for $O^{16}(p, d)O^{15}$; 40-MeV protons, lab angle 30 deg.

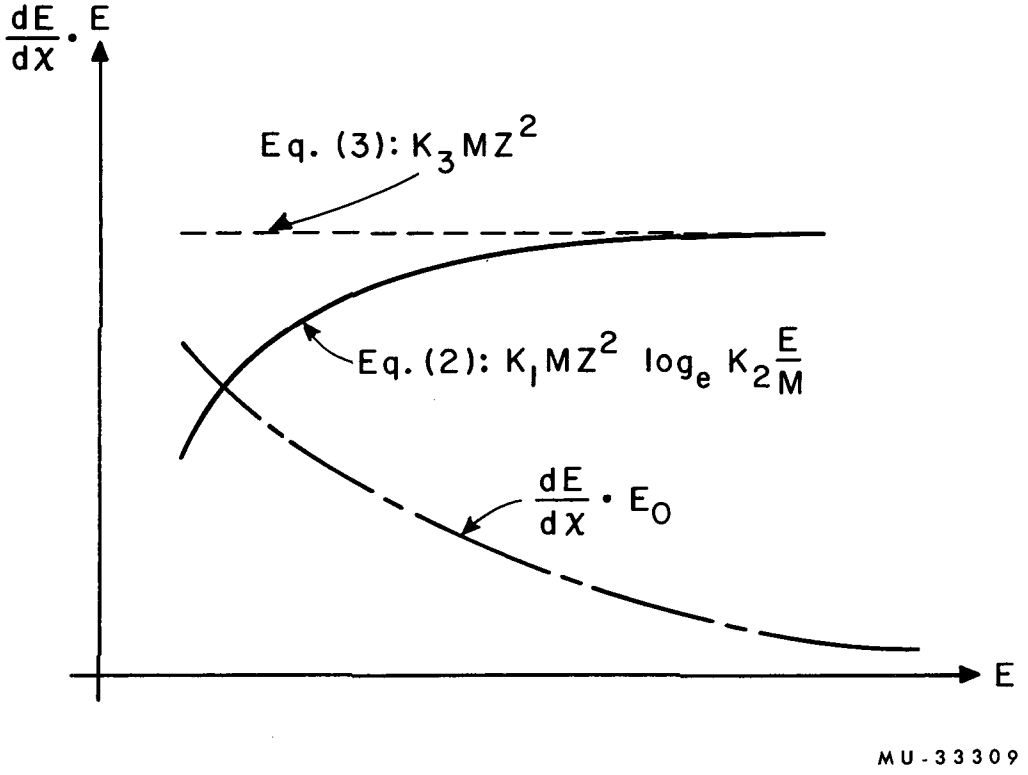
$\frac{dE}{dx} \cdot E$
Eq. (3): $K_3 M Z^2$
Eq. (2): $K_1 M Z^2 \log_e K_2 \frac{E}{M}$
$\frac{dE}{dx} \cdot E_0$
E
MU-33309

Fig. 1

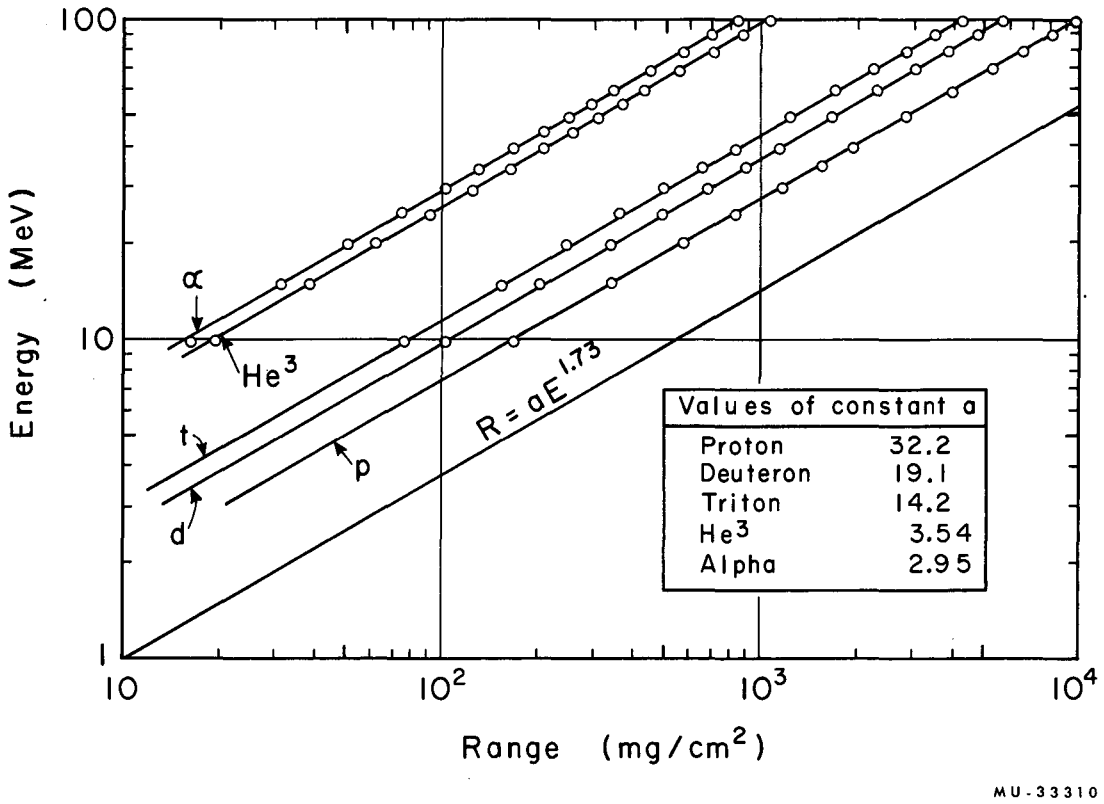
100
10
1
Energy (MeV)
10
$10^2$
$10^3$
$10^4$
Range (mg/cm$^2$)
α
He$^3$
t
d
p
R = aE$^{1.73}$
Values of constant a
Proton 32.2
Deuteron 19.1
Triton 14.2
He$^3$ 3.54
Alpha 2.95
MU-33310

Fig. 2

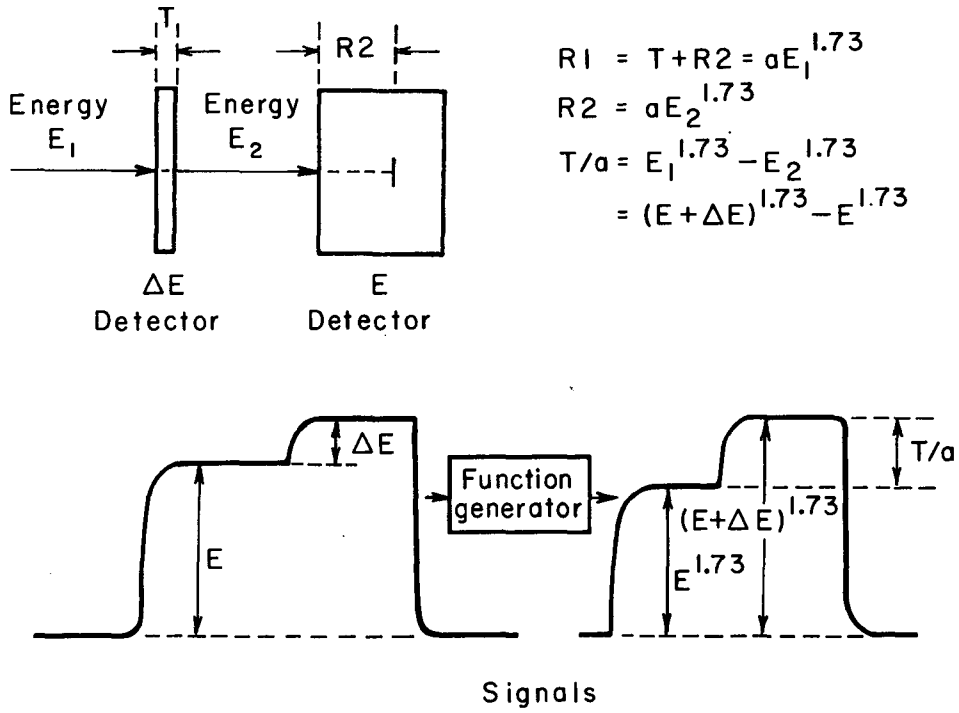
T
R2
Energy
$E_1$
Energy
$E_2$
ΔE
Detector
E
Detector
$R1 = T + R2 = aE_1^{1.73}$
$R2 = aE_2^{1.73}$
$T/a = E_1^{1.73} - E_2^{1.73}$
$= (E + \Delta E)^{1.73} - E^{1.73}$
ΔE
E
Function generator
T/a
$(E+\Delta E)^{1.73}$
$E^{1.73}$
Signals
MU-33311

Fig. 3

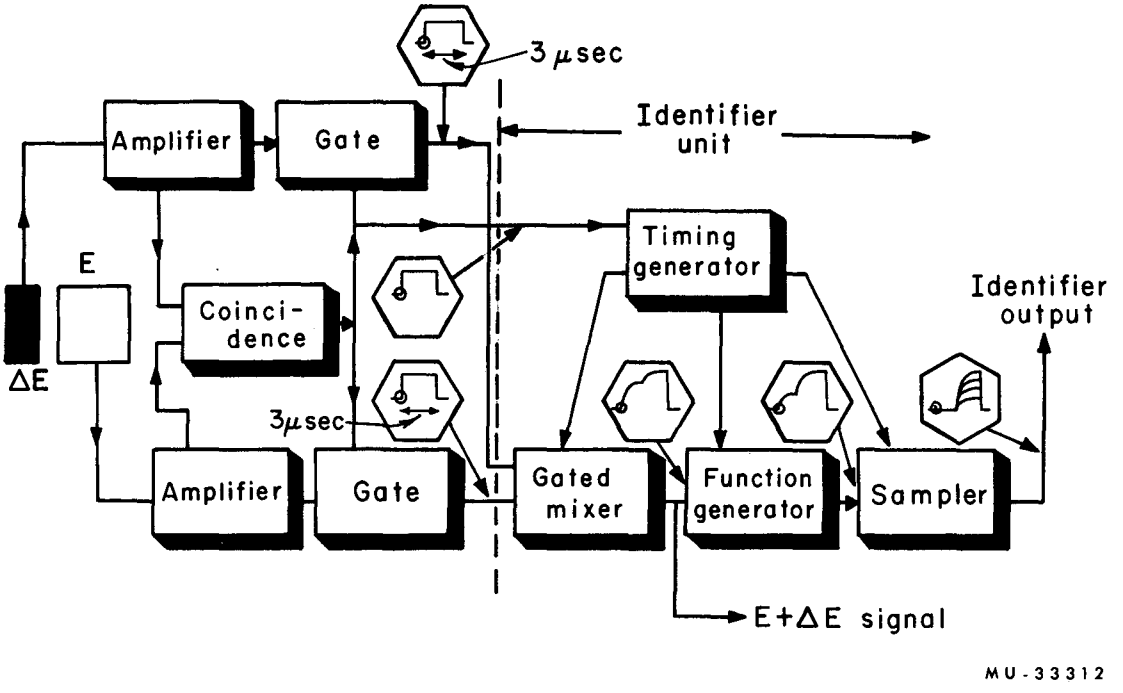
3 μsec
Identifier unit
Amplifier
Gate
Timing generator
E
ΔE
Coinci-dence
Identifier output
3μsec
Amplifier
Gate
Gated mixer
Function generator
Sampler
E+ΔE signal
MU-33312

Fig. 4

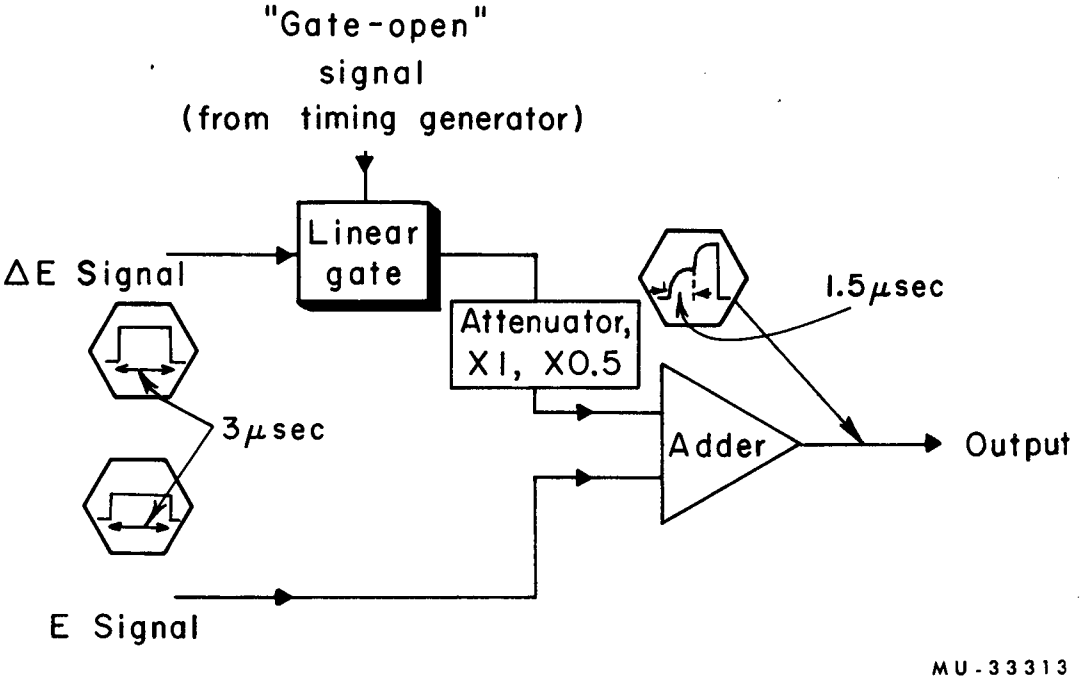
"Gate-open"
signal
(from timing generator)
Linear gate
ΔE Signal
Attenuator, X1, X0.5
1.5μsec
3μsec
Adder
Output
E Signal
MU-33313

Fig. 5

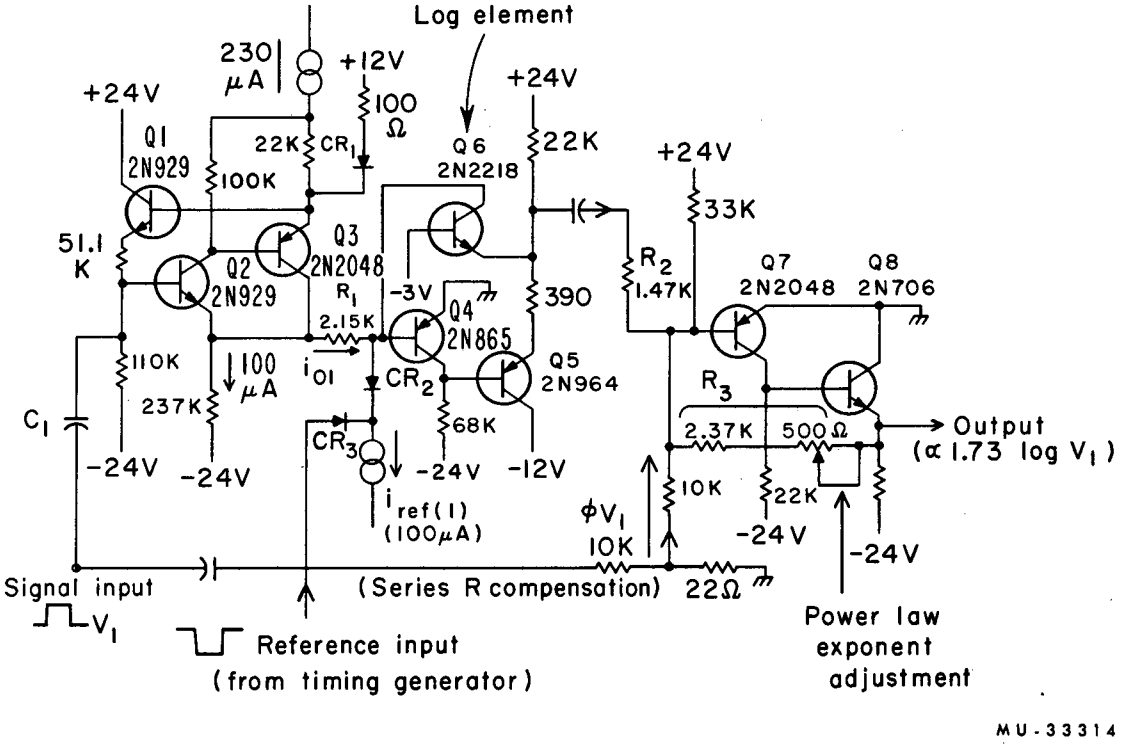
Log element
230 μA
+12V
100 Ω
+24V
Q1 2N929
22K
CR1
100K
Q6 2N2218
22K
+24V
33K
51.1 K
Q2 2N929
Q3 2N2048
R1
2.15K
-3V
Q4 2N865
390
R2 1.47K
Q7 2N2048
Q8 2N706
110K
100 μA
i01
CR2
Q5 2N964
R3
C1
237K
68K
2.37K
500 Ω
Output (∝ 1.73 log V1)
CR3
-24V
-24V
-24V
-12V
10K
22K
-24V
-24V
iref(1) (100μA)
ΦV1
10K
Signal input
V1
(Series R compensation)
22Ω
Reference input (from timing generator)
Power law exponent adjustment
MU-33314

Fig. 6

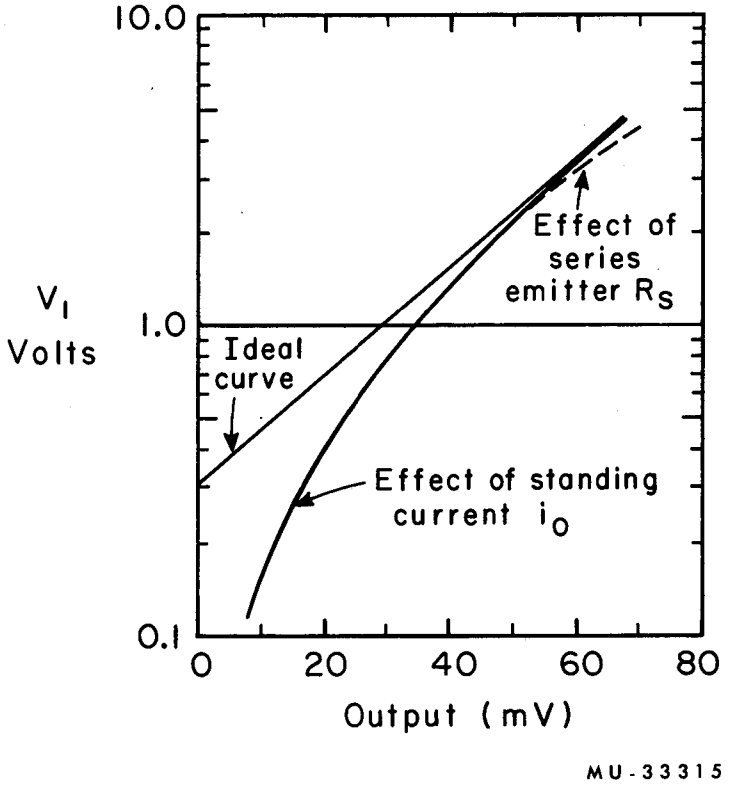
10.0
1.0
0.1
$V_I$
Volts
Ideal curve
Effect of series emitter $R_S$
Effect of standing current $i_O$
0
20
40
60
80
Output (mV)
MU-33315

Fig. 7

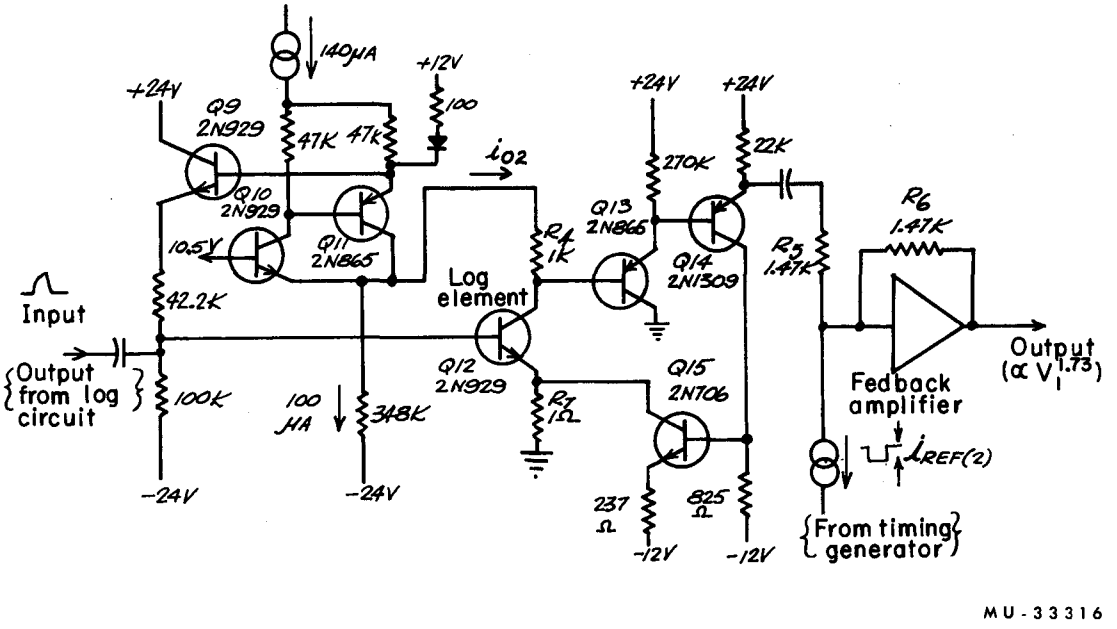
140μA
+12V
100
+24V
Q9
2N929
47K
47K
Q10
2N929
Q11
2N865
10.5V
Input
42.2K
Output
from log
circuit
100K
-24V
100
μA
348K
-24V
$i_{o2}$
R4
1K
Log
element
Q12
2N929
R7
1Ω
+24V
270K
Q13
2N865
Q14
2N1309
+24V
22K
R5
1.47K
R6
1.47K
Q15
2N706
237
Ω
825
Ω
-12V
-12V
Fedback
amplifier
$i_{REF(2)}$
From timing
generator
Output
($\propto V_I^{1.73}$)
MU-33316

Fig. 8

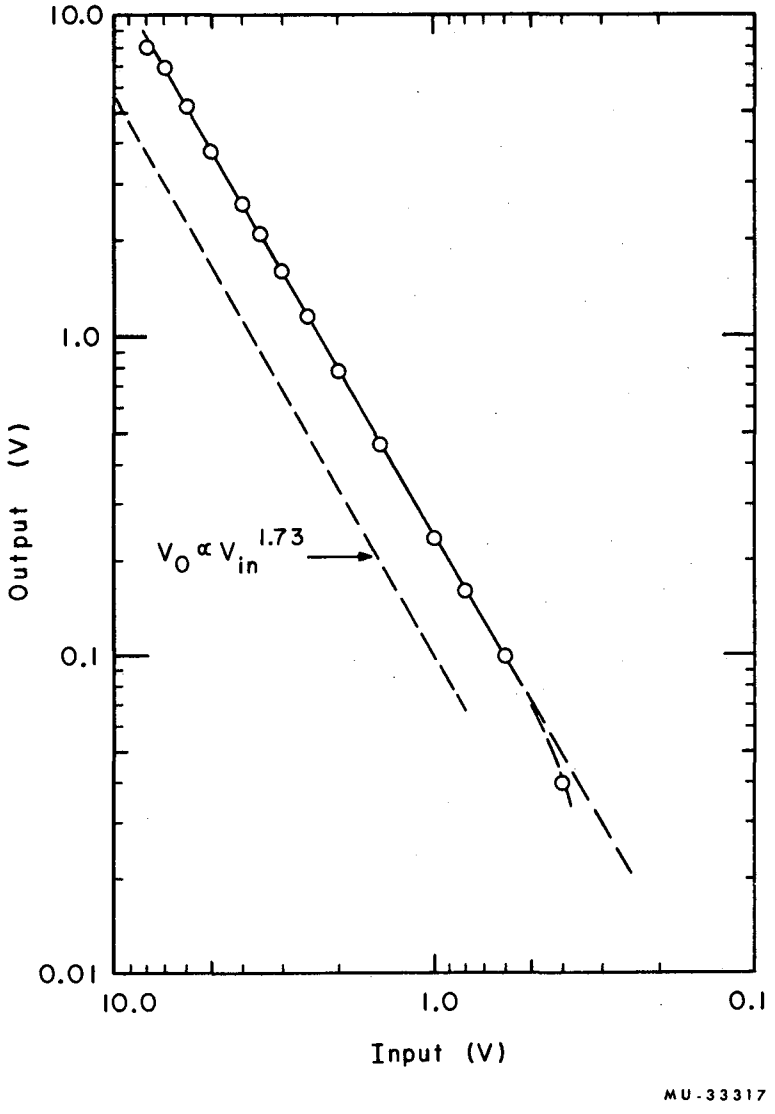
10.0
1.0
0.1
0.01
Output (V)
$V_0 \propto V_{in}^{1.73}$
10.0
1.0
0.1
Input (V)
MU-33317

Fig. 9

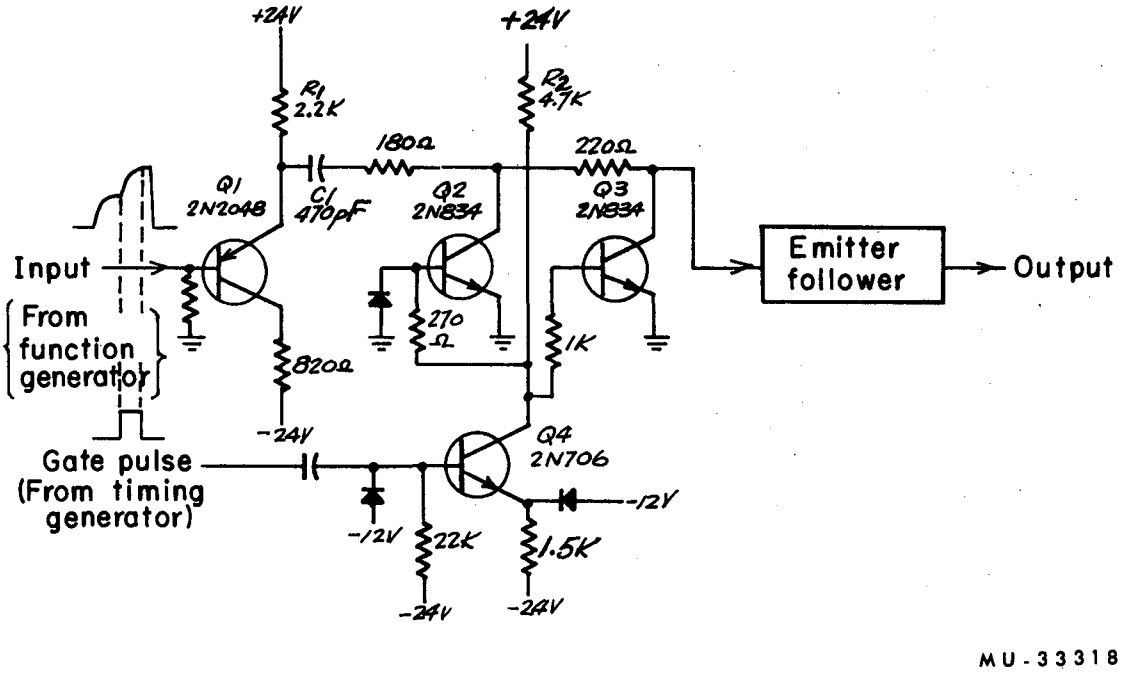
+24V
+24V
R1
2.2K
R2
4.7K
180Ω
220Ω
Q1
2N2048
C1
470pF
Q2
2N834
Q3
2N834
Input
Emitter
follower
Output
From
function
generator
270
Ω
1K
820Ω
-24V
Q4
2N706
Gate pulse
(From timing
generator)
-12V
-12V
22K
1.5K
-24V
-24V
MU-33318

Fig. 10

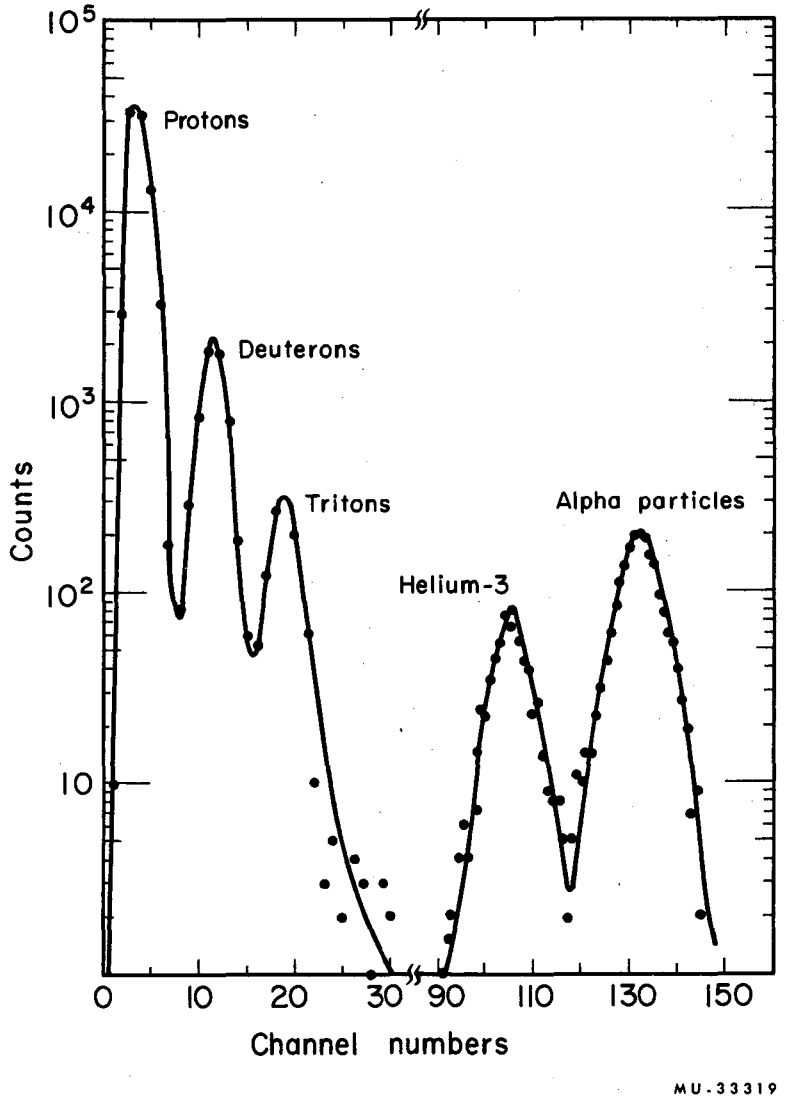
Protons
Deuterons
Tritons
Helium-3
Alpha particles
Counts
Channel numbers
$10^5$
$10^4$
$10^3$
$10^2$
10
0
10
20
30
90
110
130
150
MU-33319

Fig. 11

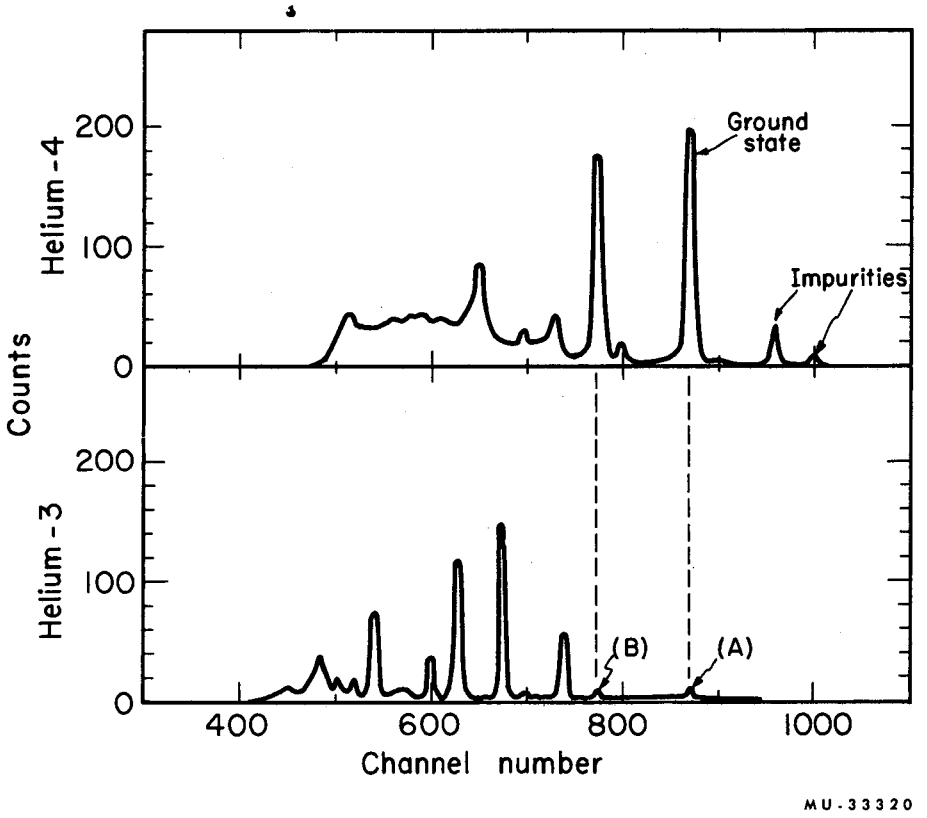
Counts
Helium-4
Helium-3
200
100
0
200
100
0
Ground state
Impurities
(B)
(A)
400
600
800
1000
Channel number
MU-33320

Fig. 12

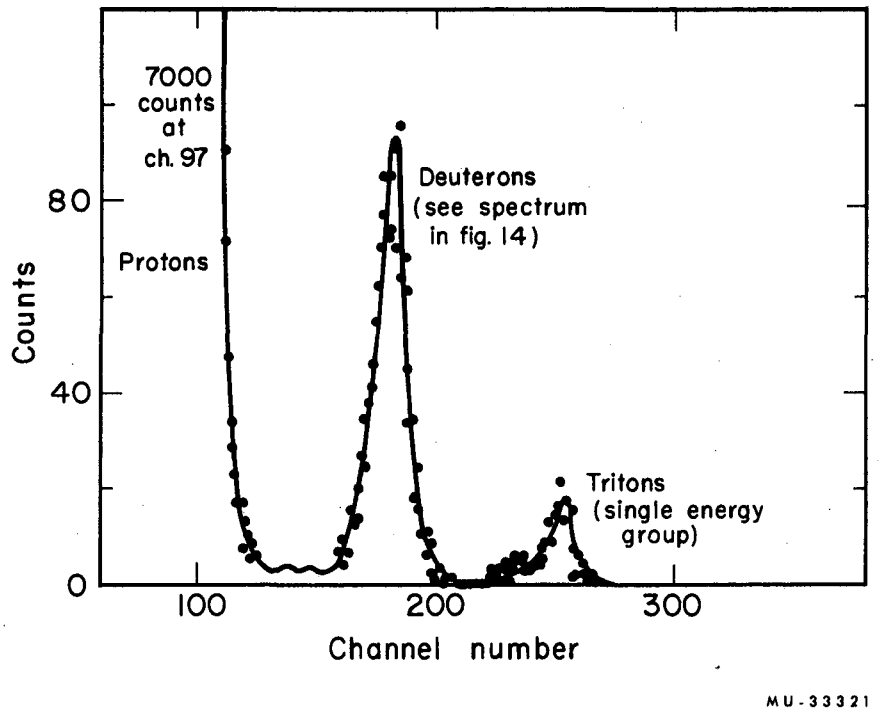
7000
counts
at
ch. 97
Protons
Deuterons
(see spectrum
in fig. 14)
Tritons
(single energy
group)
Counts
80
40
0
100
200
300
Channel number
MU-33321

Fig. 13

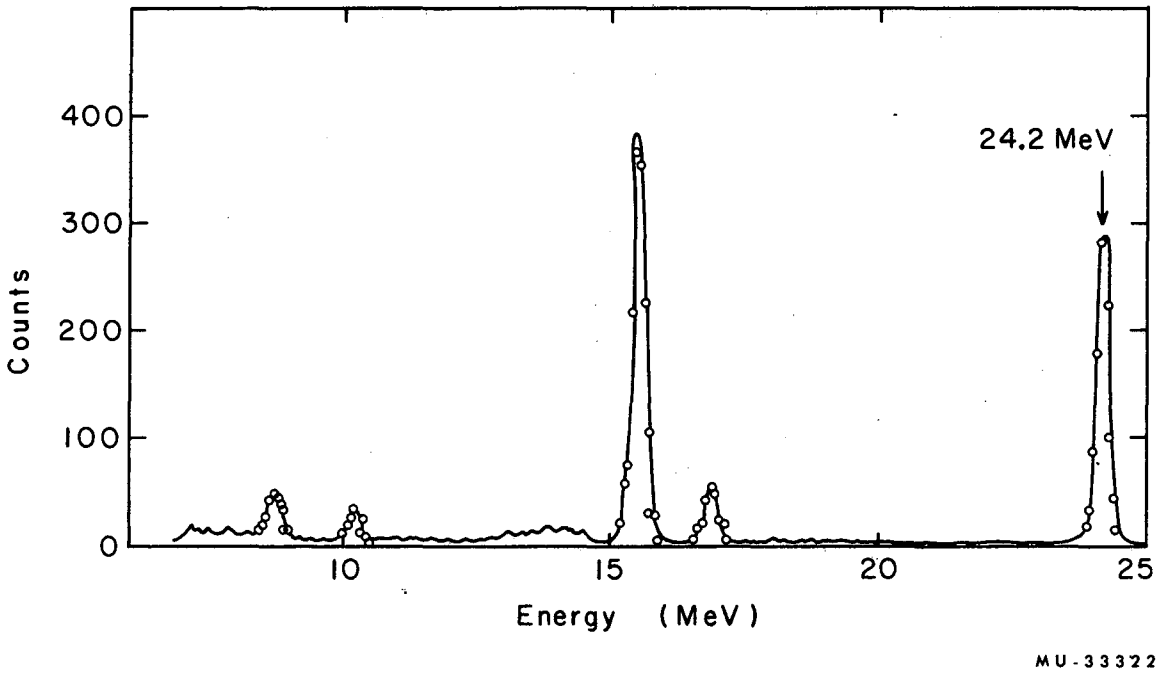


Fig. 14

This report was prepared as an account of Government sponsored work. Neither the United States, nor the Commission, nor any person acting on behalf of the Commission:

A. Makes any warranty or representation, expressed or implied, with respect to the accuracy, completeness, or usefulness of the information contained in this report, or that the use of any information, apparatus, method, or process disclosed in this report may not infringe privately owned rights; or

B. Assumes any liabilities with respect to the use of, or for damages resulting from the use of any information, apparatus, method, or process disclosed in this report.

As used in the above, "person acting on behalf of the Commission" includes any employee or contractor of the Commission, or employee of such contractor, to the extent that such employee or contractor of the Commission, or employee of such contractor prepares, disseminates, or provides access to, any information pursuant to his employment or contract with the Commission, or his employment with such contractor.