UCRL-11251

# University of California

# Ernest O. Lawrence Radiation Laboratory

ELECTROMAGNETIC PROPERTY MEASUREMENTS

Ira Pratt

March 1964

TWO-WEEK LOAN COPY

*This is a Library Circulating Copy which may be borrowed for two weeks. For a personal retention copy, call Tech. Info. Division, Ext. 5545*

Berkeley, California

Submitted for publication in
J. Applied Phys.

UCRL-11251

UNIVERSITY OF CALIFORNIA
Lawrence Radiation Laboratory
Berkeley, California

AEC Contract No. W-7405-eng-48

# ELECTROMAGNETIC PROPERTY MEASUREMENTS

Ira Pratt

March 1964

# ELECTROMAGNETIC PROPERTY MEASUREMENTS

Ira P. Pratt

Inorganic Materials Research Division
Lawrence Radiation Laboratory,
Department of Mineral Technology
University of California, Berkeley, California

## ABSTRACT

The response of a metallic specimen to an a.c. magnetic field is examined in terms of resistivity and complex permeability. An equation describing the response as a function of frequency is developed and supported by experimental measurements. It is demonstrated that metals, i.e. copper and niobium, go through a susceptance transition to become diamagnetic, with an increase in field frequency. The same transition may be obtained with a decrease in resistivity, as associated with a decrease in temperature. For a special case, the equation is shown to reduce to a form of the Curie-Weiss relationship. Possible extension of the equation to include Larmor frequency in static fields is not described. The results of this study indicate that when a susceptance measurement is used to indicate a superconductivity transition, valid comparisons with measurements taken at different frequencies (or by other methods) may not be made without incorporating a frequency correction term.

# ELECTROMAGNETIC PROPERTY MEASUREMENTS

Ira Pratt
Inorganic Materials Research Division
Lawrence Radiation Laboratory and
Department of Mineral Technology
University of California
Berkeley, California

Electromagnetic induction techniques for the measurement of the electrical and magnetic properties of materials have long been useful. There has been some question,[1] however, of the interpretation of the results in terms of the basic properties of the material being examined. The classical concepts of resistivity, attributed to conduction electron density and scattering, and permeability still represent a most convenient means for designating electrical properties. The concept of permeability is a little more evasive than is resistivity since it involves the conduction electrons with associated scattering terms, the bound electrons of the atom core, and on a fine scale the nucleus itself. It is clear that resistivity and permeability as used in electrical calculations are not independent variables, although they are usually treated as such for convenience.

Of interest here is the susceptance (or permeability) and the resistivity of a metallic specimen as deduced from alternating current induction measurements; and the effect on these measurements of a change in the specimen, and/or a change in the frequency of the applied magnetic induction field.

A metallic material, sitting in an alternating magnetic field, is represented as a single turn current loop with three characteristics: (1) Physical size with an effective cross-section area $A_2$ normal to the exciting

field; (2) Resistivity $\rho$, based upon free electron density, mean-free-path $\ell$, the thermal (Boltzmann) electron velocity $v$; and (3) Permeability $\mu_o$, where the subscript of the $\mu_o$ indicates the component of the complex permeability in phase with the induced current in the specimen. Also the term $\mu_H$ is used to represent the complex component in phase with the exciting field H. The effective cross-section of the specimen $A_2$ is equal to the actual cross-section area multiplied by a constant g, for a particular frequency.

For a cylindrical specimen, the inductive reactance may be written as $X = 4\pi\mu_o\omega\frac{A_2}{\ell_2}$ where $\omega$ is the radial frequency of the applied magnetic field. The resistance may be written as $R = \frac{2\pi\rho}{\ell_2}$. With an induced voltage in the specimen $e_2$, current in the specimen may be calculated:

$$i_2 = \frac{e_2}{R+jX} = \frac{j\omega\mu_H A_2 H}{\frac{2\pi\rho}{\ell_2} + j\frac{4\pi\omega\mu_o A_2}{\ell_2}} \qquad (1)$$

This specimen current will develop a magnetic field which will, in turn, generate a voltage in the sense coil $\dot{e}_3$. Upon making the substitution[2] $\alpha = \frac{\rho}{2\mu_o A_2}$, the ratio of the difference voltage $\dot{e}$, to the reference voltage $\dot{e}_o$ becomes:

$$\frac{\dot{e}}{\dot{e}_o} = \frac{\omega\mu_H \frac{A_2}{A_3}}{\omega - j\alpha} \qquad (2)$$

where $\frac{A_2}{A_3}$ is the ratio of specimen effective cross-section, to actual cross-section area of the sense coil. The permeability $\mu_H$ contains either a positive or a negative sign, depending upon whether the specimen is paramagnetic or diamagnetic.

Considering conventional symbols,

$$B = \mu H = H + 4\pi\chi H \tag{3}$$

$$\frac{B-H}{H} = 4\pi\chi = \frac{\dot{e}}{\dot{e}_o} = \frac{\omega\mu_H \frac{A_2}{A_3}}{\omega - j\alpha} \tag{4}$$

Here $\mu$ is the effective permeability as seen by the sense coil. Using the geometric relationship $4\pi\chi = \frac{A_2}{gA_3}(4\pi\chi_H)$, the susceptance equation becomes:

$$\frac{4\pi\chi_H}{g} = \frac{(1-g)\,\omega^2}{\alpha^2+(1-g)^2\omega^2} + j\,\frac{\alpha\omega}{\alpha^2+(1-g)^2\omega^2}\ , \tag{5}$$

where g is carried in the denominator on the left side of the equation for convenience in plotting experimental data. An evaluation of g is readily made when the in-phase and 90°-phase susceptance components are numerically equal (at the "cross-over point") from the equation:

$$g_o = \left[1 - \frac{0.50}{\left(\frac{4\pi\chi_o'}{g}\right)}\right]\ , \text{ where } \left(\frac{4\pi\chi_o'}{g}\right) \tag{6}$$

is the experimentally measured value of the in-phase component, with appropriate algebraic sign. In Fig. 2, Eq. (5) is plotted for the ~~special~~ case $g = 2$. The diamagnetic susceptance of this case is plotted against $\alpha = \frac{\rho}{2\mu_o A_2}$. Note that the value of $\alpha$ at the susceptance transition is dependent upon the measurement frequency. To experimentally confirm the equation, it is more convenient to use a frequency variable $\omega$, rather than $\alpha$. Graphically, this has the effect of inverting the in-phase susceptance plot. Figure 3 illustrates calculated curves with frequency abscissa,

normalized to experimental data for copper at the cross-over frequency. Data points are superimposed. The data points go off scale on the high frequency end, due to an unbalanced resonance in the field excitation coils.

Susceptance measurements are often used in making $T_c$ measurements of superconductors. In such a case, the component resistivity $\rho$ of the term $\alpha = \frac{\rho}{2\mu_o A_2}$ decreases rapidly with temperature to give a transition curve similar to Fig. 2. A room temperature "measurement transition" for niobium is illustrated in Fig. 4. Diamagnetic flux exclusion is obtained at frequencies above ~ 1000 cy/sec. This is a room temperature "Meissner effect", obtainable with a frequency abscissa.

It is of interest to examine Eq. (5) when $g \leq 1$, the condition for paramagnetism: For the special case $g = 1$, Eq. (5) becomes

Subscript

$$4\pi\chi_H \longrightarrow 0 + j\,\frac{\omega}{\alpha} = j\,\frac{2\omega\mu_o A_2}{\rho} \qquad (7)$$

Dropping the complex notation and setting $\mu_o = (1+4\pi\chi_H)$, we get:

$$4\pi\chi = \frac{2\omega A}{\rho - 2\omega A} \qquad (8)$$

Remembering that the resistivity is an "almost linear" temperature function above the Debye temperature $T_\theta$, the resistivity becomes $\rho = \rho_\theta \frac{T}{T_\theta}$. Equation (8) now transforms into the Curie-Weiss relationship:

$$4\pi\chi = \frac{T_c}{T - T_c} \qquad (9)$$

($\theta$ and c, are subscripts)

where the Curie temperature $T_c = \left(\frac{2\omega A}{\rho_\theta}\right) T_\theta$.

Curves of the resistivity vs. temperature and, concurrently, susceptance vs. temperature, for the ordered alloy MnRh have been published by Kovel, Hartelius, and Osika.[3] Their data seem to directly substantiate Eq. (8). The susceptance cusp in their data curve occurs when the resistivity is ~ 9 X $10^4$ emu at ~ 180°K.

The results of this study indicate that when a susceptance measurement is used to indicate a superconductivity transition, valid comparisons with measurements taken at different frequencies (or by other methods) may not be made without incorporating a frequency correction term.

This work was performed under the auspices of the United States Atomic Energy Commission.

## REFERENCES

1. E. Maxwell and M. Strongin, Phys. Rev. Letters 10, 212 (1963).

2. This is the classical penetration depth equation if $\delta = \sqrt{A/\pi}$

3. J. A. P. 34, 4 (part 2), p. 1095 (1963).

## FIGURE CAPTIONS

Fig. 1 Specimen geometry and measuring circuit

Fig. 2 A. C. Susceptance. Plot of Eq. (5) for $g = 2$, at a measuring frequency of 100 cy/sec. $\alpha = \frac{\rho}{2\mu_o A_2}$, and $\frac{4\pi\chi_H}{g} = \frac{4\pi\chi'}{g} + j\,\frac{4\pi\chi''}{g}$.

Fig. 3 Calculated susceptance curve for copper. The superimposed points are experimental values. $A_2 = g_o A = 3.25\ cm^2$, where $g_o = 2.58$.

Fig. 4 Niobium susceptance. The transition giving "flux exclusion" occurs at a field frequency of 4,400 cy/sec. $A_2 = g_o A = 2.37\ cm^2$, where $g_o = 3.16$.

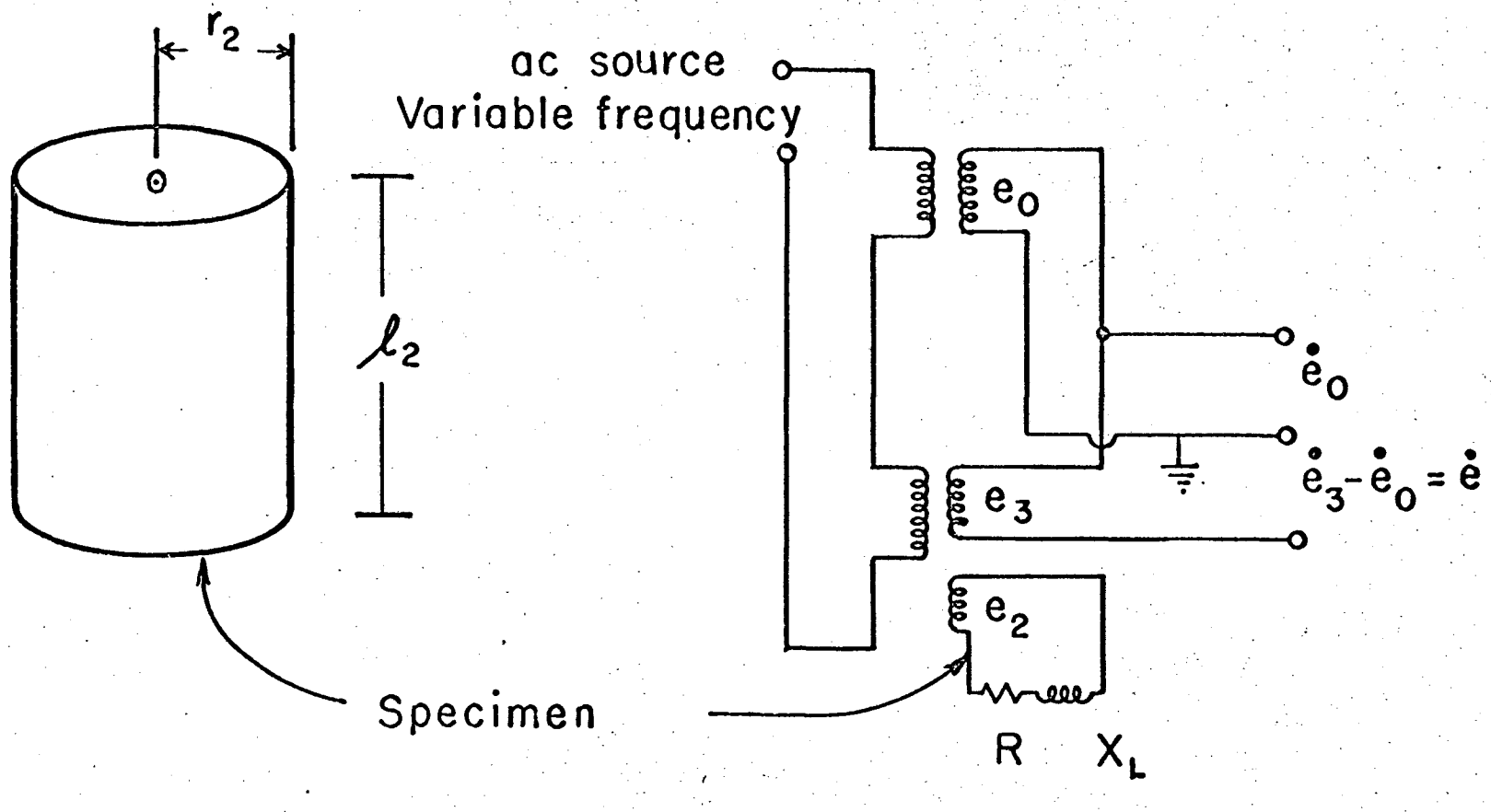


Fig. 1

MU-33504

Fig. 1

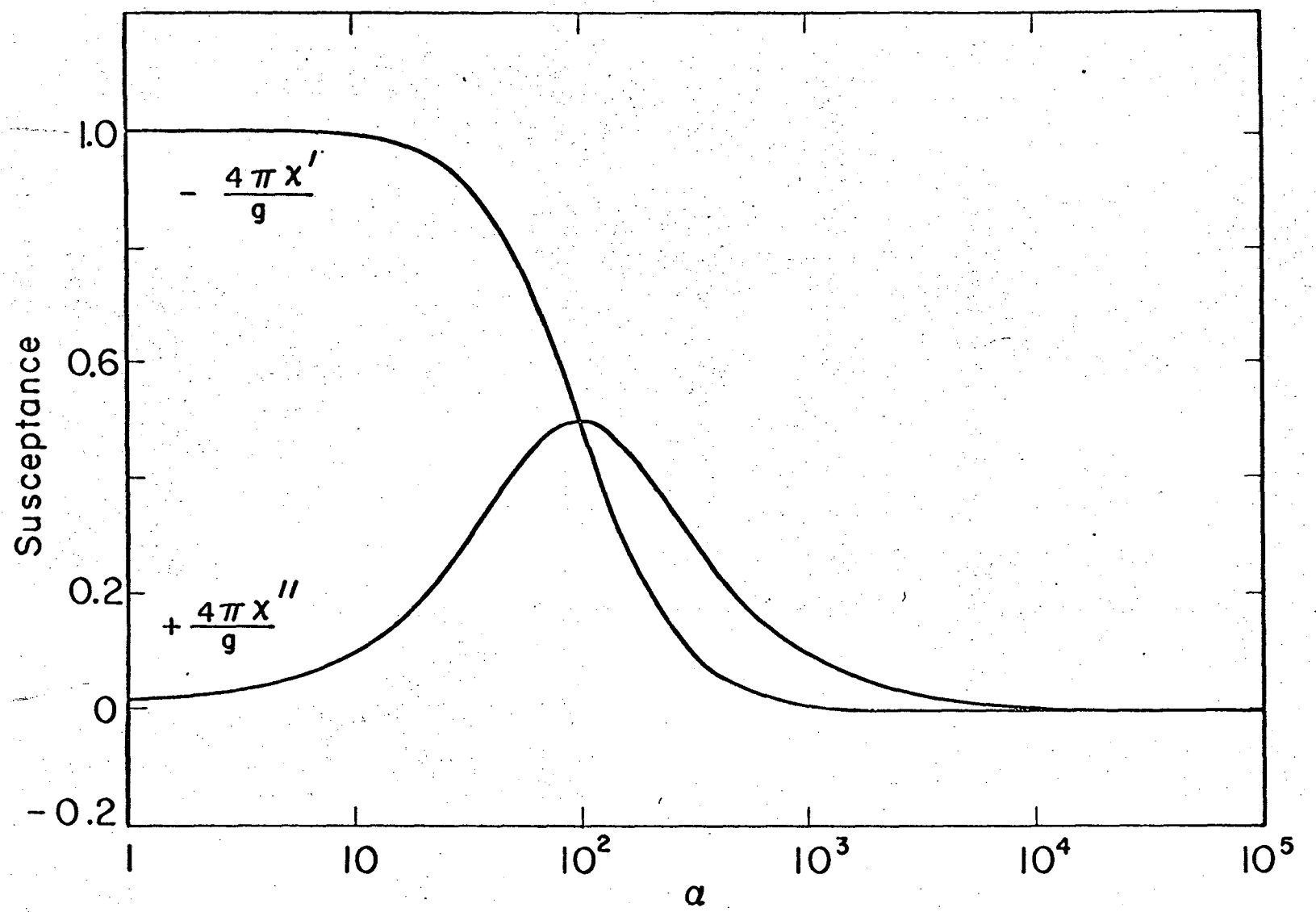


Fig. 2

MU-33491

Fig. 2

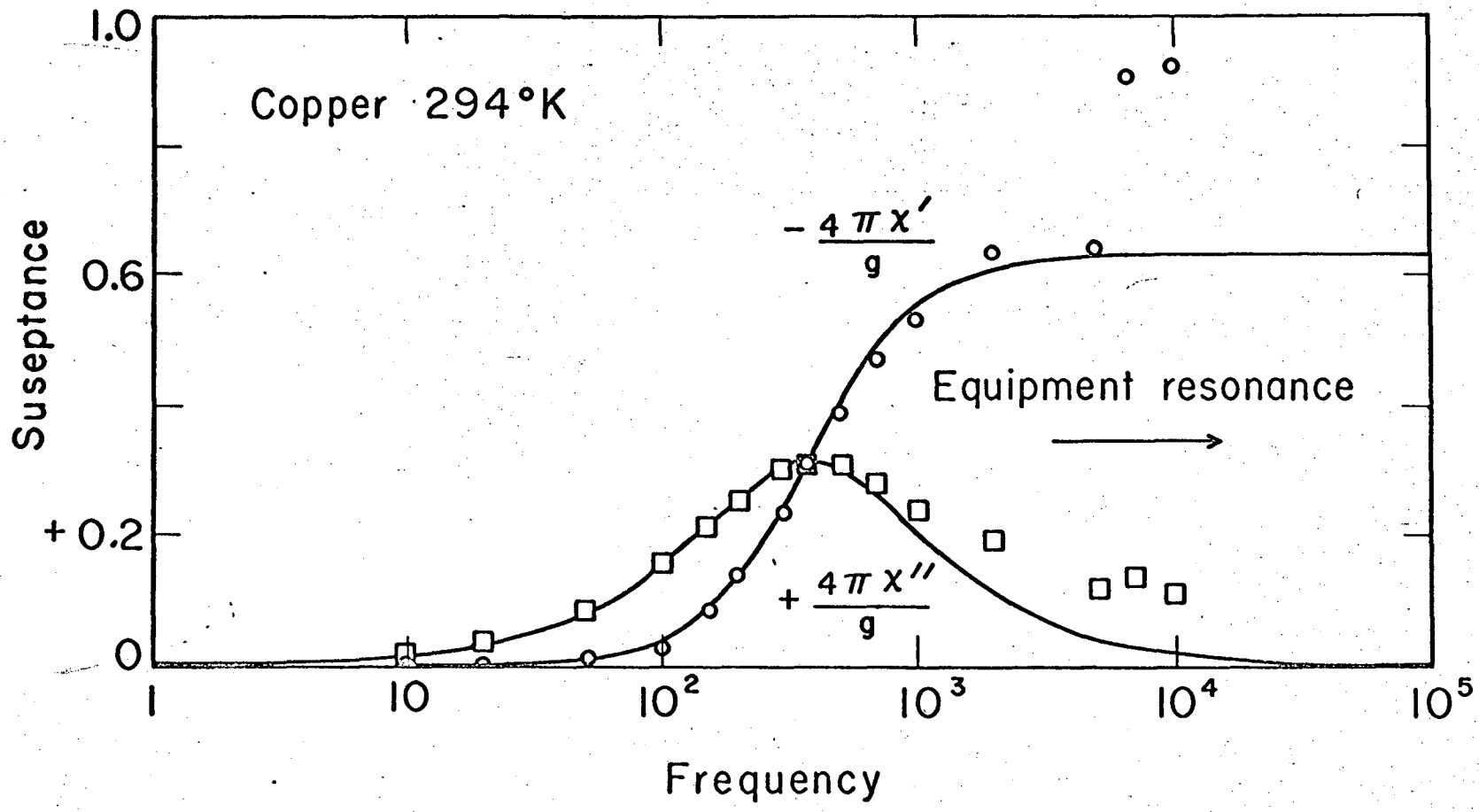


Fig. 3

MU-33492

Fig. 3

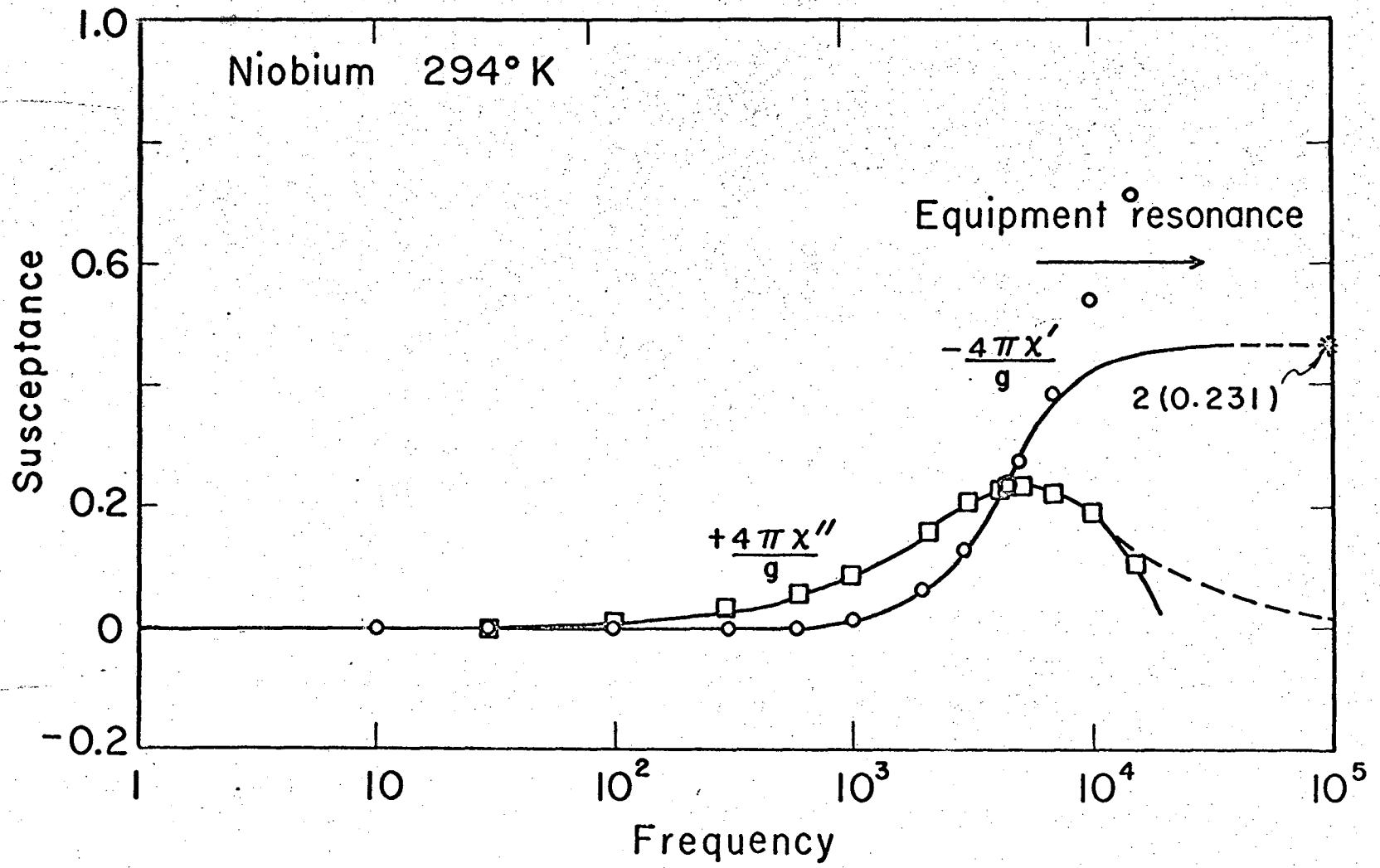


Fig. 4

MU-33493

Fig. 4

This report was prepared as an account of Government sponsored work. Neither the United States, nor the Commission, nor any person acting on behalf of the Commission:

A. Makes any warranty or representation, expressed or implied, with respect to the accuracy, completeness, or usefulness of the information contained in this report, or that the use of any information, apparatus, method, or process disclosed in this report may not infringe privately owned rights; or

B. Assumes any liabilities with respect to the use of, or for damages resulting from the use of any information, apparatus, method, or process disclosed in this report.

As used in the above, "person acting on behalf of the Commission" includes any employee or contractor of the Commission, or employee of such contractor, to the extent that such employee or contractor of the Commission, or employee of such contractor prepares, disseminates, or provides access to, any information pursuant to his employment or contract with the Commission, or his employment with such contractor.